Seatex AIS 100
Instruction Manual

Blank page

Document revisions

Document ID	Rev.	Date	Reason for revision
	0 - 3		Draft versions
	4	2003-03-03	Updated NMEA descriptions
Man_instr_ais100_r5	5	2003-03-31	Minor update after internal revision

Software versions

This Instruction Manual applies to software version 1.06 and newer.

Blank page

Table of contents

1 GENERAL INFORMATION 1

1.1 Introduction 1

1.2 How to use this manual 1

1.3 References 1

1.4 Abbreviations and acronyms 2

1.5 AIS – Automatic Identification System 3

1.6 System components 6

1.7 Electrical specifications 8

2 OPERATION 9

2.1 Introduction 9

2.2 Operational modes 9

2.2.1 Autonomous and continuous mode 9

2.2.2 Assigned mode 9

2.2.3 Polled or controlled mode 10

2.3 Malfunction and fallback arrangements 10

2.4 Mobile station initialisation 10

2.5 Overview 11

3 DISPLAY PAGES 13

3.1 Main menu descriptions 13

3.1.1 Navigational status 13

3.1.2 Long range history 13

3.1.3 Voyage data 14

3.1.4 Static data 15

3.1.5 Dynamic data 16

3.1.6 Channel management 17

3.1.7 VHF link 18

3.1.8 Downperiods 18

3.1.9 Network & ports 19

3.1.10 Answer modes 19

3.1.11 Diagnostics 20

3.1.12 Security 21

3.2 Authorisation code entry 21

3.3 View page 22

3.4 SMS menu 22

3.5 Alarms 26

3.6 Adjusting brightness and contrast 26

4 TECHNICAL SPECIFICATIONS 27

4.1 Health, environment and safety 27

4.2 Restrictions in guarantee 27

4.3 Physical dimensions 27
5 INSTALLATION 33
5.1 General 33
5.2 AIS 100 MKD 34
5.3 AIS 100 mobile station 35
5.4 AIS 100 connection box 37
5.5 External cabling of data signals 41
5.6 AIS 100 VHF antenna 42
5.7 AIS 100 GPS antenna 44
5.8 Internal alarm system 46
6 EXTERNAL INTERFACES 47
6.1 External interfaces 47
6.2 Presentation interface 47
6.3 Long range interface 49
6.4 Sensor input 49
6.5 New IEC 61162-1 sentences 51
6.6 IEC 61162-1, Ed. 2, sentences 70
6.7 Proprietary 61162-1 sentences 81
7 SOFTWARE SETUP PROCEDURE 85
7.1 Description of installation setup 85
8 MAINTENANCE 89
8.1 General 89
8.2 Periodic maintenance 89
8.3 Repairs and modifications 89
8.3.1 Exchange of antenna cable 90
8.3.2 Exchange of GPS or VHF antennas 90
8.3.3 Repair of the Seatex AIS 100 90
8.4 Installation of a spare Seatex AIS 100 91
9 TROUBLESHOOTING 93
9.1 Hardware problems 93
9.1.1 Power supply failing 93
9.1.2 GPS and VHF antenna cable connections 93
9.1.3 GPS and VHF antenna malfunction 93
9.1.4 GPS receiver failing 94
9.1.5 VHF transceiver failing 94
9.2 External data interface problems 94
9.2.1 Data input from main GPS/GNSS source 94
9.2.2 Heading from vessel heading sensor 95
10 PARTS LIST 97
APPENDIX A – VESSEL TYPES 99
APPENDIX B – DECLARATION OF CONFORMITY 101
INDEX 103

List of illustrations

Figure 1 Elements in an AIS system 4
Figure 2 AIS 100 system components 6
Figure 3 Front display MKD unit 11
Figure 4 MKD unit dimensions 27
Figure 5 Mobile station dimensions 28
Figure 6 Connection box dimensions 29
Figure 7 VHF antenna 30
Figure 8 GPS antenna and pole dimensions 31
Figure 9 Rear side of the MKD unit and interconnection plug 34
Figure 10 The Amphenol connector 35
Figure 11 Recommended free space to rear side of mobile station 36
Figure 12 Rear side of mobile station 36
Figure 13 The 9-pin D-sub plug 37
Figure 14 Recommended free space to rear side of connection box 38
Figure 15 The 50-pin plug 40
Figure 16 Talker and listener cabling – data/shield 41
Figure 17 Third wire cabling 41
Figure 18 Recommended VHF antenna installation 42
Figure 19 VHF and GPS antenna cable connector termination 43
Figure 20 Recommended GPS antenna installation 44
Figure 21 GPS antenna offset arms 45
Figure 22 Interfaces to the Seatex AIS 100 mobile station 47

Blank page

1 GENERAL INFORMATION

1.1 Introduction

Congratulations on the purchase of your new Seatex AIS 100 and thank you for selecting what is one of the best AIS systems available on the market today.

Kongsberg Seatex AS manufactures several positioning and navigation products for all types of vessels, from fishery and merchant marine vessels to advanced offshore and research vessels. Kongsberg Seatex AS is located in Trondheim in the central part of Norway. The company's involvements in positioning and navigation products began in 1984 with equipment for offshore and research vessels. Professional mariners around the world acknowledge the Seatex brand names as the "leading edge" in advanced, accurate and reliable navigation and positioning products.

1.2 How to use this manual

This manual is intended as a reference guide for operation, installation and maintenance of the Seatex AIS 100 system. Great care has been taken to simplify the setup and operation of the system.

Please take the time to read this manual to get a thorough understanding of the Seatex AIS 100's components and operation, as well as their relationship to other sensors interfaced to the system.

Before going into details about the Seatex AIS 100 a short introduction to AIS – Automatic Identification system is presented. The mobile station will also be referred to as a transponder.

1.3 References

[1] IEC 61993-2. *MARITIME NAVIGATION AND RADIOCOMMUNICATION EQUIPMENT AND SYSTEMS - Automatic Identification Systems (AIS) Part 2: Class A Shipborne equipment of the Universal Automatic Identification System (AIS) - Operational and performance requirements, methods of test and required test results.* Committee draft for vote 2001-02-16.

[2] *RECOMMENDATION ITU-R M.1371. TECHNICAL CHARACTERISTICS FOR A UNIVERSAL SHIPBORNE AUTOMATIC IDENTIFICATION SYSTEM USING TIME DIVISION MULTIPLE ACCESS IN THE VHF MARITIME MOBILE BAND.* Draft Revision.

[3] IEC 60945 *Maritime navigation and radio communication equipment and systems -General requirements - Methods of testing and required test results.* Third edition.

[4] IEC 60950 *Safety of information technology equipment*. Edition 3.0, 1999-04.

[5] IEC 61162-1 Ed. 2.0 (2000-07) *Maritime navigation and radio communication equipment and systems - Digital interfaces - Part 1: Single talker and multiple listeners.*

[6] IEC 61162-2 Ed. 1.0 (1998-09) *Maritime navigation and radio communication equipment and systems - Digital interfaces - Part 2: Single talker and multiple listeners, high-speed transmission.*

1.4 Abbreviations and acronyms

ABK	Addressed and Binary Broadcast Acknowledgement
ABM	Addressed Binary and Safety Related Message
ACA	AIS Regional Channel Assignment
AIS	Automatic Identification System
ALR	Alarm
BIIT	Built In Integrity Tests
BS	Base Station
COG	Course Over Ground
DGPS	Differential GPS
DSC	Digital Selective Calling
ECDIS	Electronic Chart Display and Information System
ECS	Electronic Chart System
EMC	Electromagnetic Compatibility
ETA	Estimated Time of Arrival
FATDMA	Fixed Allocation TDMA
GNSS	Global Navigation Satellite System
GPS	Global Positioning System
HDG	Heading
IALA	International Association of Lighthouse Authorities
IEC	International Electrotechnical Commission
IMO	International Maritime Organisation
LAN	Local Area Network
LED	Light Emitting Diode
LR	Long Range
MKD	Minimum Keyboard Display
MMSI	Maritime Mobile Service Identity
MSG	Message
N/A	Not Applicable
NMEA	National Marine Electronics Association
PI	Presentation Interface
PPS	Pulse-per-second
PWR	Power
ROT	Rate of Turn
RTCM	Radio Technical Commission of Maritime Service

RX	Receive
Seatex	Kongsberg Seatex AS
SOG	Speed Over Ground
SOTDMA	Self Organising TDMA
SWR	Standing Wave Ratio
TBD	To Be Defined
TDMA	Time Division Multiple Access
TX	Transmit
TXT	Text Message
UTC	Universal Co-ordinated Time
VDL	VHF Data Link
VDM	VHF Data Link Message
VDO	VHF Data Link Own Vessel Message
VHF	Very High Frequency
VTS	Vessel Traffic Service

1.5 AIS – Automatic Identification System

AIS is an identification system that uses VHF communication to transmit and receive AIS data. AIS operates primarily on two dedicated VHF channels, AIS 1 – 161,975 MHz and AIS 2 – 162,025 MHz. Where these channels are not available regionally, the AIS can be set to alternate designated channels.

The AIS mobile station broadcasts the vessel's position, speed and course over ground as well as static and voyage related information. Short safety related text messages can be sent between vessels or broadcast from shore based AIS stations or Aids to Navigation like buoys and lighthouses. The on-board installed mobile station is designed to operate automatically and as a stand-alone unit. When not transmitting, the mobile station listens for position information from other vessels or shore based stations.

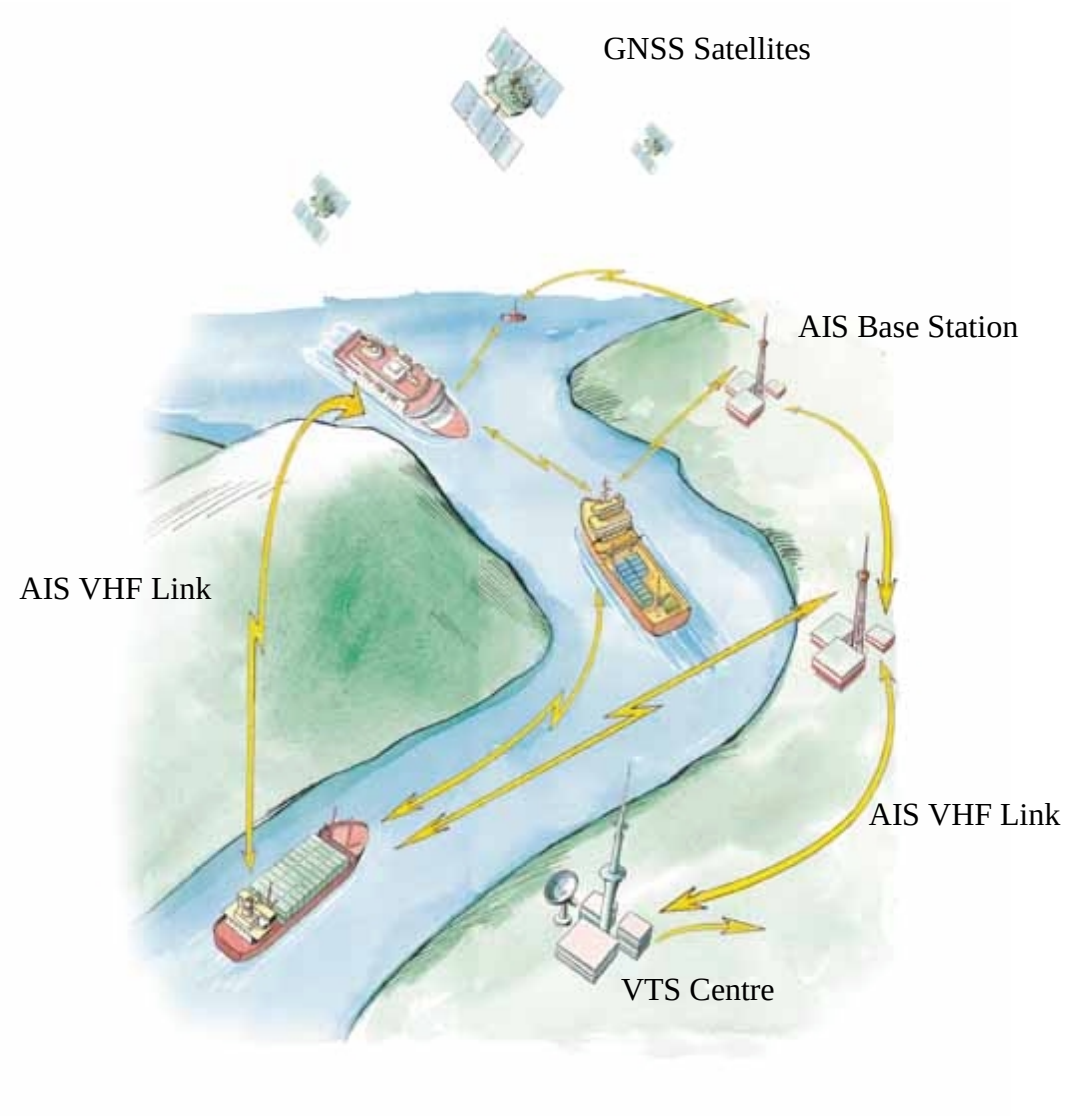

Figure 1 Elements in an AIS system

The system broadcasts data using the SOTDMA (Self-organised Time Division Multiple Access) data protocol. Each minute is divided into 4500 time slots, enabling simultaneous transmission of up to 500 stations.

Coverage

The system radio coverage range is similar to other VHF applications and is dependent on the height of the antenna. The propagation differs from that of a radar, due to the longer wavelength, so it is possible to "see" around bends and behind islands if the landmasses are not too high. A typical value to be expected at sea is 20 nautical miles.

AIS information content

AIS type of information is exchanged automatically between vessels, vessels and shore based stations and vessel and Aids to Navigation like buoys and lighthouses. The information transmitted by the AIS mobile stations is grouped in four categories:

Static Data

- MMSI (Maritime Mobile Service Identity) number
- Call sign and name
- IMO number
- Length and beam
- Type of ship
- Location of position fixing antennas on the ship

Voyage Related Data

- Ship's draught
- Hazardous cargo type
- Destination and ETA (at Master's discretion)

Dynamic Data

- Position with accuracy indication and integrity status
- Time in UTC
- COG (Course over ground)
- SOG (Speed over ground)
- Heading
- Navigational status
- Rate of turn

Safety-related Messages

- Reading and writing short safety related messages

Data reporting and transmission rates

AIS data as stated above is autonomously sent at different update rates and thus reporting rates are dependent on the ship's navigational mode. Dynamic information is dependent on speed and course alteration while static and voyage related data are transmitted every 6 minutes or on request. Thus fast ferries will report their navigational data at a higher update rate than ships at anchor.

Type of Ship	Reporting Interval
Ship at anchor	3 min.
Ship 0 to 14 knots	12 sec.
Ship 0 to 14 knots and changing course	4 sec.
Ship 14 to 23 knots	6 sec.
Ship 14 to 23 knots and changing course	2 sec.
Ship > 23 knots	3 sec.
Ship > 23 knots and changing course	2 sec.

All data input to the AIS mobile stations is based on the NMEA 0183 data protocol. Messages sent on VHF are based on the AIS data protocol, which defines several Message Types containing different types of information.

1.6 System components

The Seatex AIS 100 system consists of the following units:

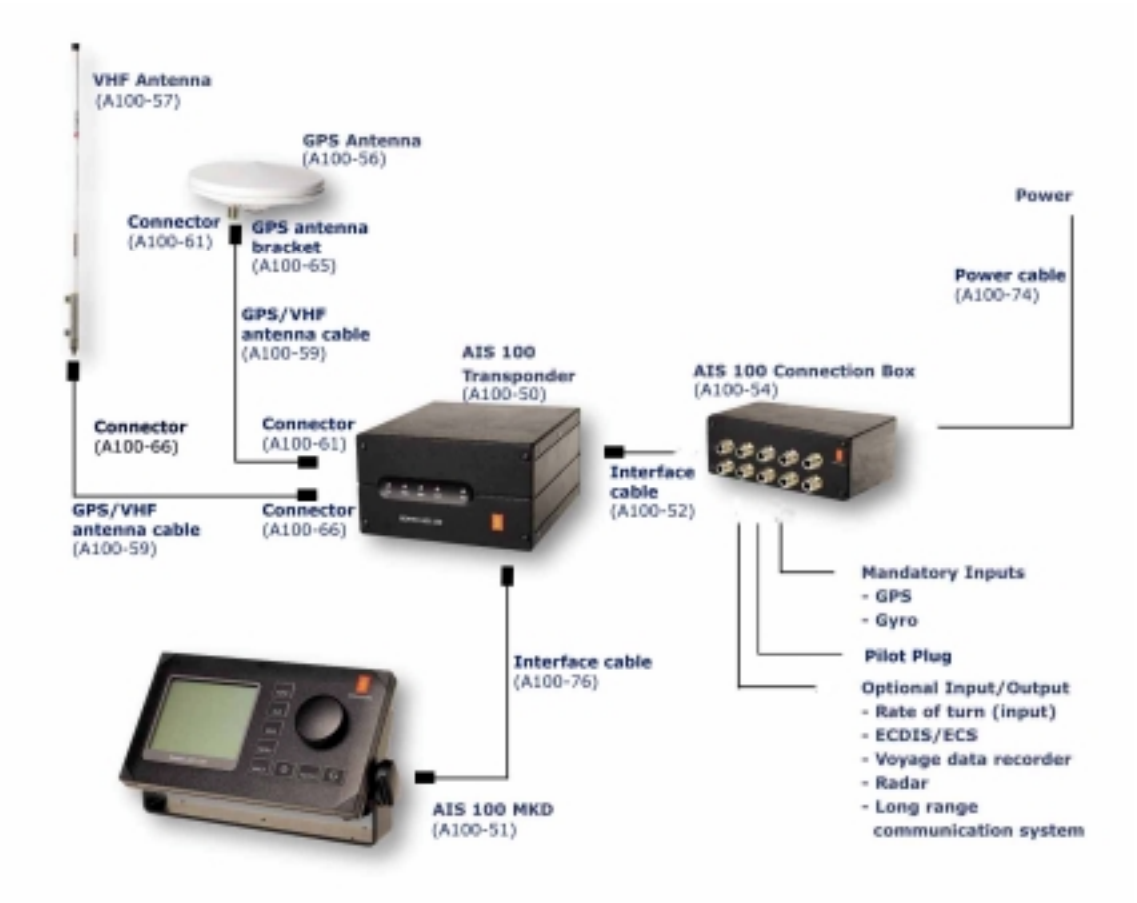

Figure 2 AIS 100 system components

AIS 100 Minimum Keyboard and Display (MKD)

The MKD unit provides a simple user interface to the mobile station. The keypads on the MKD can be used to navigate between dedicated menus used for configuration and display of vessel navigation data. Text messages can also be entered into the MKD and transmitted to other vessels or shore based AIS stations providing warnings or other relevant navigation information. Thus the MKD provides basic presentation of configuration data, position data and text messages. If the AIS has been interfaced to the on-board ECDIS system or radar the information displayed on the MKD can also be displayed on an AIS compatible ECDIS or ECS systems.

AIS 100 mobile station

The mobile station incorporates two VHF receivers, configured to operate on the predefined AIS frequencies for the region, one VHF transmitter transmitting on all required frequencies and one DSC receiver. The mobile station also incorporates a GPS receiver and a processor. The internal GPS receiver, which is capable of receiving differential corrections for increased position accuracy, is used for time synchronisation and as a backup position sensor. For AIS data transmission, the Self Organised Time Division Multiple Access (SOTDMA) data protocol is used. SOTDMA enables a large number of vessels to receive and transmit AIS data at the same time.

Front LED indicators

The LED indicators on the front of the mobile station can be used to monitor status as well as data reception and transmission.

Led	Colour	Description
TX	Off	Transmitter idle
	Amber	Transmitting on AIS channel B
	Green	Transmitting on AIS channel A
	Red	Transmitter turned off
MSG	Off	No message/report being received
	Amber	Message/report received on channel B
	Green	Message/report being received on channel A
GPS	Amber	Indirect synchronisation free run
	Green	Internal GPS OK. GPS synch selected
ALM	Off	No alarm
	Red	Alarm. Alarm relay activated
PWR	Green	Indicates powered unit

AIS 100 connection box

The connection box is used to connect to external sensors main position sensor, heading sensor and rate of turn sensor (when available). These sensors are mandatory while interfaces to electronic hart systems and long range communication systems, are optional. AIS compatible ECDIS/ECS systems are interfaced to the AIS through serial line communication. Power is supplied to the AIS mobile station through the connection box.

AIS 100 VHF antenna

The VHF antenna is used for VHF communication. The antenna is connected to the mobile station using cables with attenuation less than 3 dB.

AIS 100 GPS antenna

The GPS antenna is an L1 antenna receiving signals from all visible satellites. The antenna is hermetically sealed and the cable used to connect the GPS antenna to the mobile station should be of a quality that ensures minimum loss of signal, i.e. less than 20 dB.

1.7 Electrical specifications

Input supply

Supply voltage	18 - 35 V DC
Supply current	1.0 A (no VHF Tx)
@ 24 V DC	1.2 A (2 W) VHF
	1.6 A (12 W) VHF

Serial port capability

Mode	RS-422
Isolation	1 kV
Line tolerant	min +/- 15 V DC
Line speed	1200 - 57600 bits/s
Talker capability	max 8 listeners @120 Ohm
Listener load requirements	120 Ohm (recommended)

Network

Network speed	10 Mbit/s

2 OPERATION

2.1 Introduction

The AIS should always be in operation. It is recommended not to switch off the AIS during port stays in order to provide information to port authorities. In areas where piracy occurs, the master may switch of the transmitter. If the transmitter is switched off, static data and voyage related information will be stored.

2.2 Operational modes

After the unit has been installed and configured it operates automatically without any user intervention. The mobile station has three operational modes:

- Autonomous and Continuous mode
- Assigned mode
- Polled or Controlled mode

2.2.1 Autonomous and continuous mode

In the Autonomous and Continuous mode the mobile station automatically defines its own reporting rate in accordance with its navigational mode, speed and course. The unit also selects its own data transmission slots. This is the normal mode for operation in all areas but the mode may be switched to/from Assigned mode or Polled or Controlled mode by a competent authority via a base station on shore.

2.2.2 Assigned mode

A competent authority responsible for traffic monitoring may remotely set transmission intervals and/or time slots for the vessel mobile station. When operating in Assigned mode, the mobile station will transmit position data on a slightly different format, AIS Message Type 2, instead of the transmitted AIS Message Type 1. In Assigned mode the mobile station does not change its reporting rate when changing course and speed. Assignments are limited in time and will be re-issued by the competent authority when needed. Thus, Assigned mode only affects the transmission and not the reception of position reports.

2.2.3 Polled or controlled mode

In this mode the mobile station will automatically respond to interrogation messages from a ship or competent authority. The response is transmitted on the channel where the interrogation message was received. Operation in Polled or Controlled mode does not conflict with operation in the other two modes.

2.3 Malfunction and fallback arrangements

The mobile station has built-in integrity testing to continuously verify own operational status and notify user and external equipment if any malfunction is detected. Part of this test monitors the transmitter and receiver modules. Alarm status will be transmitted to the PI port in addition to triggering the alarm relay.

Malfunction type	**Malfunction source**
Tx malfunction ID 001	Tx frequency is not locked or Tx power is measured outside setting
SWR 3:1 malfunction ID 002	SWR is measured to more than 3:1
ChA malfunction (RX1) ID 003 ChB malfunction (RX2) ID 004 Rx DSC malfunction ID 005	ChA frequency is not locked ChB frequency is not locked Ch70 frequency is not locked

2.4 Mobile station initialisation

The mobile station will automatically switch on when power is applied to the unit by connecting the power cable in the connection box. There is no on/off switch and thus power is removed by disconnecting the power cable in the connection box.

- After power has been applied, wait for the two-minute initialisation period.
- At completed initialisation all LEDs will go amber.
- The mobile station is ready for operation when the GPS LED is blinking at one-second intervals.
- The **View** page will appear on the MKD.

2.5 Overview

The default view of the display shows vessel own position along with course (degrees) and speed (knots) over ground. Other vessels are shown in ascending order relative to own vessel position.

Figure 3 Front display MKD unit

Buttons	[Condition] Action	Function
VIEW	[Always] Pressed once	Displays the **View** page
ALR	[Always] Pressed once	Displays the **Alarms** page
	[Always] Pressed more than once	Displays the **Long Range** page
SMS	[Always] Pressed	Displays the **SMS Menu** page
MENU	[Always] Pressed	Displays the **Main Menu** page
BACK	[Always] Pressed	Displays the previous page
△	[When ▲ present in lower right corner] Pressed	Displays previous subpage
	[When writing/editing]	Moves highlighting up
ENTER	[When choice is highlighted] Pressed	Selects highlighted choice
	[When nothing is highlighted] Pressed	No action
▽	[When ▼ present in lower right corner] Pressed	Displays next subpage
	[When writing/editing] Pressed	Moves highlighting down
○	[When choice is highlighted] Rotated either way	Moves highlighting

Blank page

3 DISPLAY PAGES

The Seatex AIS 100 provides several display pages and menus available for setup and display of information as well as editing of text messages. In this chapter all display windows available are presented and their contents discussed to enable easy operation and use of the AIS mobile station.

3.1 Main menu descriptions

```
=== Main Menu ======== P1
1.    Nav.Status
2.    Long Range history
3.    Voyage Data
4.    Static Data
5.    Dynamic Data
6.    Chn.Management
7.    VHF Link
8.    Downperiods
9.    Network & Ports
a.    Answer Mode
b.    Diagnostics
c.    Security
1.06.zz
```

This is the **Main Menu** page. Press the MENU button on the MKD unit to access the main menu. The program version is shown in the lower part of the page, where 1.06 is the version number and zz the revision.

3.1.1 Navigational status

```
=== Nav Status ====== P11
  Own Ship

AT ANCHOR

=== Choose from list ====
AT ANCHOR
UNDER WAY USING ENGINE
UNDER WAY SAILING
ENGAGED IN FISHING
NOT UNDER COMMAND
RESTR.MANOEUVRABILITY
CONSTRAINED BY DRAUGHT
MOORED
AGROUND
```

The **Nav Status** page enables the operator to change the navigational status from a pre-defined list. Options are AT ANCHOR, UNDER WAY USING ENGINE, UNDER WAY SAILING, ENGAGED IN FISHING, etc.

3.1.2 Long range history

```
=== Long Range ====== P12
  Own Ship

LR INFO REQ.   03Jan 1230
lr info req.   01Jan 1145
lr info req.   01Jan 1134
```

The **Long Range** page contains active and resolved Long Range interrogation requests.

```
=== Requested Info = P121
  BELLA

Name, Callsign, IMO
Position,COG,SOG




=== Choose from list ====
Send
Deny
```

If a new **lr info req** is selected, the name of the requesting station will be displayed. The actions available are send or deny the interrogation. This page could also be accessed through the Alarm page by selecting the LR alarm.

```
=== Provided Info = P121
  BELLA

Name, Callsign, IMO
Position,COG,SOG




=== Choose from list ====
OK
Delete
Delete All LR
```

If a **handled lr info req** is selected, the provided information will be displayed.
OK – keeps the message and exits the page.
Delete – deletes the message.
Delete All LR – deletes all LR messages.

3.1.3 Voyage data

```
=== Voyage Data ===== P13
  Own Ship

Dest     :HAMBURG
Eta      :05022345
Drght    :120
OnBrd    :15
```

The **Voyage Data** page is used to input information such as:
Dest: Destination of voyage.
ETA: Estimated time of arrival is displayed as month, day, hour and minutes (MMDDHHMM).
Drght: Vessel draught.
OnBrd: Total number of people on board

3.1.4 Static data

Static Data is used to enter static ship data, i.e. ship data that do not change from one voyage to another. Static data should be entered when installing the AIS mobile station.

```
=== Static Data ===== P14
  Own Ship            1/3

Name     :ANNE BERIT
Call     :TA164GH
Mmsi     :14395769235
Imo      :10978974453
Type     :51
Keel     :12
```

The **Static Data** display window shows own vessel static data such as:
Call: This is the vessel call sign.
MMSI: This is the vessel Maritime Mobile Signal Identifier number.
IMO: This is the vessel IMO number.
Type: Type of vessel. (See "Appendix A – Vessel types")
Keel: height over keel. Total height of vessel in metres.

```
=== Static Data ===== P14
  Own Ship            1/3

Name     :ANNE BERIT
Call     :TA164GH
Mmsi     :14395769235
Imo      :10978974453
Type     :51
Keel     :12
```

In order to make changes to any **static data field**, use the WHEEL to select desired line and confirm with the ENTER button. Changing static data could require an authorisation code to be entered before data is entered depending on the security setting

```
=== Static Data ===== P14
  AIS Transceiver      2/3

Length A:30
Length B:10
Length C:7
Length D:7
```

The **AIS transceiver entry** specifies the antenna location for the mobile station's internal GPS receiver.

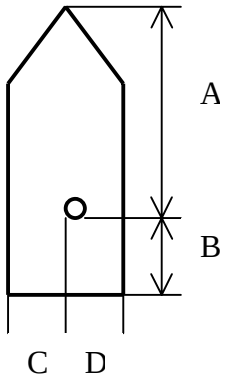

```
=== Static Data ===== P14
  AIS Transceiver      2/3

Length A:30
Length B:10
Length C:7
Length D:7




===Choose from list ====
Error. Continue Edit?
Abort menu page
```

If some of the **static data parameters** have been input with a "zero" or "negative" number, you will be prompted with the options: "Error. Continue Edit?" or "Abort menu page". If "Error. Continue Edit?" is selected, new parameters can be input as described above. "Abort menu page" will keep the previous data set.

```
=== Static Data ===== P14
  GPS                 2/3

Length A:30
Length B:10
Length C:7
Length D:7




========================
         1234567890*< >
```

As for input of the position for the AIS Mobile station antenna, the **Static data GPS** page enables input of the vessel's main GPS/GNSS antenna position.

3.1.5 Dynamic data

```
=== Dynamic Data ==== P15
  Own Ship            1/2
LAT      :012°13’23.56N
LON      :010°24’13.73E
COG      :007.58°
SOG      :009.31Kn
HDG      :328.13°
ROT      :001.32°/min
EPFD     :GPS
QUAL     :DGPS SPS Mode
```

Dynamic data is the current status of the vessel. These data are updated by the sensors and require no manual data entry.

HDG and **ROT** requires an external HDG sensor. If no sensor is connected, the default value is ---.-- **QUAL** denotes the quality of the GPS signal, either a DGPS or a standard GPS.

```
=== Dynamic Data ==== P15
  Sensor Status       2/2

UTC Lost
Int. DGPS in use (msg17)
Internal SOG/COG in use
Heading valid
Other ROT source in use
```

Sensor status gives the current status of external sensors.

3.1.6 Channel management

```
=== Chn Management == P15
1.    Edit Cur.Reg.
2.    View Regions
3.    Add Region          .
```

Channel Management is used to configure different radio channels for different chart zones. Maximum 8 zones can be configured by input. A zone is defined by the latitude and longitude of its upper right (UR) corner and lower left (LL) corner. When configured, the dedicated AIS frequencies will automatically be used by the system when the vessel position is inside the geographically defined area. The main menu has three options for channel management, which are described in the following.

```
=== Edit Cur.Reg. ==== P151
  RECTANGLE-2

ChnA          :143
ChnB          :144
RxTxMode      :TxA/TxB,RxA/RxB
TxPower       :High
LAT NE        :012°13’23.56N
LON NE        :132°36’14.02E
LAT SW        :034°56’21.06N
LON SW        :125°56’12.21E
BW A          :Hi
BW B          :Hi
Zone          :2
```

The **Edit Current Region** page enables the operator to change channels for the two AIS radio receivers. The TxPower can only be set to High or Low. If High is selected, the transmission power is set to 12.5 W and if Low is selected, the transmission power is set to 2 W. BW A and BW B is the bandwidth settings for the VHF.
The selections are Default or Narrow. Default is the maximum bandwidth allowed for this channel (25 kHz or 12.5 kHz). Narrow denotes 12.5 kHz. The user is only allowed to decrease the bandwidth. **Zone** denotes the size of the transition area in nautical miles outside of the region.

```
=== View Regions ==== P152
  RECTANGLE-1          1/8

ChnA          :143
ChnB          :144
RxTxMode      :TxA/TxB,RxA/RxB
TxPower       :High
LAT NE        :012°13’23.56N
LON NE        :132°36’14.02E
LAT SW        :034°56’21.06N
LON SW        :125°56’12.21E
BW A          :Hi
BW B          :Hi
Zone          :2
                              ▼
```

The **View Regions** page displays all defined regions. This is a read only page and thus no configuration changes can be made. The view regions may consist of up to 8 pages and the ARROW DOWN button can be used to display more regions.

```
=== Add Regions ====== P153
  RECTANGLE-7

ChnA          :56
ChnB          :58
RxTxMode      :TxA,RxA/RxB
TxPower       :High
LAT NE        :012°13’23.56N
LON NE        :132°36’14.02E
LAT SW        :034°56’21.06N
LON SW        :125°56’12.21E
BW A          :Hi
BW B          :Hi
Zone          :3
                              ▲
```

The **Add regions** page is for creating new regions by manual input.

3.1.7 VHF link

```
=== VHF Link ======== P17
  Ais Transceiver

ChnA              :2087
ChnB              :2088
TxPower           :HIGH
BW A              :Default
BW B              :Default
Transmitter       :TxON
```

The **VHF link** page displays the current VHF settings. In addition to the normal VHF settings, the transmitter can be turned off in this menu. This option should only be used in situations where transmission would endanger the ship, e.g. in war-like situations, piracy etc.

3.1.8 Downperiods

```
=== Downperiods ===== P18
  From      To

*01:30 20Nov 02:35 20Nov
 11:00 19Nov 12:35 19Nov
 16:20 16Nov 20:00 16Nov
 11:30 15Nov 02:35 15Nov
*08:30 15Nov 02:35 15Nov
 15:30 13Nov 02:35 13Nov
 01.30 11Nov 02:35 11Nov
#11:30 10Nov 12:35 12Nov
#09:40 09Oct 10:10 09Oct
 19:20 05Oct 15.10 06Oct
```

The **Downperiods** page displays when the mobile station has been out of operation. Out of operation is either when the power has been off, the transmitter has been disabled (prefixed with #) or when a TX malfunction has occurred (prefixed with *).

3.1.9 Network & ports

```
=== Network & Ports = P19
1.    Serial Ports
2.    Netw.Settings
```

The **Network and ports** page gives access to the configuration settings for external serial ports and network (LAN) settings.

```
=== Serial Ports === P191
  External ports

PILOT          :38400
PI             :38400
LongRange      :4800
RTCM           :4800
SENSOR-1       :4800
SENSOR-2       :4800
SENSOR-3       :4800
```

The **Serial ports** page displays the baud rate for all serial ports. Only the baud rates can be changed. The sensor interfaces comply with NMEA 0183.

```
=== Netw.Settings == P192
  External ports

IP-adr      :10.0.21.53
SubNet      :255.255.255.0
Gateway     :10.0.21.1
MAC MS      :000.005.190
MAC LS      :000.000.230
```

The **Network** page displays the network settings. A network administrator for a Local Area Network will provide the appropriate settings for this page.

3.1.10 Answer modes

```
=== Answer Mode ==== P1a
  Current Settings

Long Range          :Automatic
VDL Response        :On



====Choose from list ===
Manual
Automatic
```

The **Answer mode** page configures the polling operation of the mobile station. The Long Range requires additional external equipment for the carrier system (Inmarsat …). The VDL response configures the behaviour on normal VHF polling. The normal operation is ON.

3.1.11 Diagnostics

```
=== Diagnostics ===== P1b
1.    Chn.Activity
2.    Port Activity
3.    SWR Levels
```

The **Diagnostics** page gives additional technical and operational information about the system. This is for service purposes by qualified personnel.

```
=== Chn.Activity === P1b1
   Last Activity On Chn

VDL TxA: Msg1          00:25
VDL TxB: Msg1          00:25
VDL RxA: Msg1          00:10
VDL RxB: Msg5          00:30
DSC Tx : Msg4          59:59
DSC Rx : Msg4          59:59
```

Displays the various **messages** received and transmitted on VHF. The timestamp gives the elapsed time, in minutes and seconds, since the last event on the channel.

```
=== Port Activity == P1b2
   Last Activity On Port

PI   In : VDM          00:05
PI   Out: VDO          00:03
LR   In : LRI          01:00
LR   Out: LR2          00:35
RTCM In : MSG          00:23
RTCM Out: MSG          00:10
SOR1 In : GGA          00:01
SOR2 In : HDT          00:05
SOR3 In : ROT          00:02
```

Displays the messages on the **serial interfaces** timestamped as above.

```
=== SWR Levels ===== P1b3
   Radio Measurements

Forward   [W]      : 2
Reflected [W]      : 0.003
SWR                : 1.1
```

This is for service purposes by qualified personnel.

3.1.12 Security

```
=== Security ======== P1C
   Authorisation

L1 PIN Code         :*******
L2 PIN Code         :*******
Nav.Status          :0
Voyage Data         :0
Static Data         :0
Chn.Mgmt            :1
VHF Link            :1
Serial Ports        :1
Netw.Settings       :1
Answer Mode         :0
```

The **Security** page contains authorisation setup for the mobile station. There are two authorisation code levels. On this page the PIN codes can be set and a number of menu pages can be protected against unauthorised change. PIN codes, see chapter 7. The Level 2 PIN code (L2) is valid on all pages requiring L1 authentication[1]. The possible levels are:

0 No authorisation code
1 Use L1 or L2 PIN code
2 Use L2 PIN code

All entries on this page are protected by L2 PIN code.

3.2 Authorisation code entry

This page will appear when modifying data protected by the security page.

```
=======================
Enter authorisation code
PIN: **
=======================
ABCDEFGHIJKLMNO
PQRSTUVWXYZ1234
567890.,!\"@<←↵
```

In order to enter the **Authorisation** code use the WHEEL to select symbols and confirm each input using the ENTER button. When all symbols in the authorisation code have been input, select the ↵ symbol (confirming to the system that the last symbol within the authorisation code has been entered) and finally press the ENTER button.

[1] Once authenticated with L1 or L2 PIN code, the authentication is valid until the View page has been displayed for 5 seconds or more. To protect the AIS security systems, the MKD returns to the View page when not used for 15 minutes or more. In high security applications we recommend manually returning to the View page for 5 seconds or more when the change that required authentication is completed.

3.3 View page

```
RANGE BRG   NAME      1/2

00.12 123.1 ORION
00.12 123.1 ANDREAS
01.23 134.2 BERIT
03.34 145.3 SANANTONIO
05.45 156.4 HORNET
10.56 230.5 TORGEIR
30.67 023.6 HENNINSVÆR
40.78 302.7 STORFJORD
52.89 010.8 PANFISH

LAT: 63 26’31.20N   TXOFF
LON:010 24’13.78E   ALARM
SOG:024 COG:156     SMS
```

The **View** page is the default view on the MKD.
The **View** button will display this page.
Depending on the number of other vessels within range, the number of pages will change dynamically.
The lower part of the screen contains own vessel information in addition to status of alarms and events.
Name could be either MMSI number or name.
MMSI number is transmitted more frequently than names.
Base stations use the MMSI prefixed with *.

```
RANGE BRG   NAME      2/2

90.12 123.1 VIKTOR
98.12 123.1 DALSUND
99.99 134.2 ANKRABAD
99.99 145.3 OTTAR
99.99 156.4 VIKERSUND

LAT: 63 26’31.20N
LON:010 24’13.78E   ALARM
SOG:024 COG:156     SMS
```

View page continued.

3.4 SMS menu

```
=== SMS Menu ========= P2
1.   Inbox
2.   Outbox
3.   Predefined
4.   Write Msg
5.   Write SR Msg
6.   Write BrcSR Msg
7.   Write Pred. Msg
8.   Clear Message Box
```

The **SMS** menu system contains the actions related to the Short Messages System in the AIS.

```
=== Inbox ============ P21
  Received Messages  1/2

 SANDPIPER        28/05 2300
 JON ARVID        28/05 2210
#Andreas          28/05 1030
*Viktor           28/05 0700
 Jenny            27/05 2230
 Per Oddvar       27/05 2000
*Hansemann        27/05 1440
 Nordstjerna      27/05 1000
 Hulken           27/05 0900
 Lofoten          27/05 0800
 Nord Norge       26/05 2300
                          ▼
```

The **Inbox** contains the received massages from other AIS systems, either base stations or other mobile stations.
Broadcast messages are prefixed with #. Security related messages are prefixed with *.

Unread messages are identified by capital letters in the sender's name

```
=== Inbox ========== P211
  SANDPIPER         1/20

PLEASE BE AWARE OF THE
SUNKEN VESSEL PIER II
IN THE STRAUME STRAIT.

                      ▼
```

A **message** is displayed by selecting the sender and pressing the ENTER button.

```
=== Inbox ========== P211
  SANDPIPER         1/20

PLEASE BE AWARE OF THE
SUNKEN VESSEL PIER II
IN THE STRAUME STRAIT.



====Choose from list ===
Delete
Reply
Reply SR
Reply BrCast SR
```

When pressing ENTER again, a list of **choices** appears.
Delete – deletes the message.
Replay – replay as text message.
Reply SR – reply as safety related text message.
Reply BrCast SR – reply as broadcasted safety related message.

```
=== Outbox ========== P22
  Sent Messages      1/2

 LITTLE JON       29/05 1224
 San Quinn        29/05 1000
*Pan Fish         29/05 0630
 Nor Cargo        28/05 2200
#Andreas          28/05 1030
*Viktor           28/05 0700
*Hansemann        27/05 1440
 Nordstjerna      27/05 1000
 Hulken           27/05 0900
 Lofoten          27/05 0800
 Nord Norge       26/05 2300
                          ▼
```

The **Outbox** page displays sent messages and messages waiting to be transmitted.

```
=== Outbox ========= P221
   *Pan Fixh         3/16

PLEASE BE AWARE OF THE
SUNKEN VESSEL PIER II
IN THE STRAUME STRAIT.
```

Similar to the inbox, messages in the outbox can be selected and inspected.

```
=== Outbox ========= P221
  *Pan Fish         3/16

PLEASE BE AWARE OF THE
SUNKEN VESSEL PIER II
IN THE STRAUME STRAIT.

====Choose from list ===
Delete
Send
Send SR
Send BrCast SR
```

By pressing ENTER again, an outbox message can be deleted or re-sent. If deleted, the next message will be displayed.

```
=== Predefined ====== P23
  Predefined Messages

Departure
Service request
```

A predefined message can be entered in the **Write Pred.Msg.** A list of such messages will appear in the **Predefined Messages** page.

```
=== Write Msg ======= P24
  Use Chn:_

====Choose from list ===
Default
A only
B only
Both
```

The **Write Msg** page contains the parameters which should be set in order to define and send a text message. This includes on the channel on which the message should be transmitted and the destination of the message.

A message destination must be selected among the vessels within reach, i.e. vessels present in the View page.

```
=== Write SR Msg ==== P25
  Use Chn:Both

SHIP LITTLE JON.YOUR
STBRD LIGHT IS NOT
WORKING. REGAR_




========================
        ABCDEFGHIJKLMNO
        PQRSTUVWXYZ1234
       567890.,!"@- *<>
```

Safety related messages will be transmitted with higher priority than normal messages. A safety related message will be transmitted before any other pending normal SMS messages.

```
=== Write BrcSR Msg = P26
  Use Chn:B only       68

SHIP LITTLE JON.YOUR
STBRD LIGHT IS NOT
WORKING. REGARD CPT.
JENSEN_



========================
        ABCDEFGHIJKLMNO
        PQRSTUVWXYZ1234
       567890.,!"@- *<>
```

Broadcast messages must be safety related. Entry is similar to all other message entry with one exception: For Broadcast messages, no destination is selected.

```
=== Write Pred.Msg == P27
  Departure

READY FOR DEPARTURE.
ANY FINAL ISSUES?




========================
        ABCDEFGHIJKLMNO
        PQRSTUVWXYZ1234
       567890.,!"@- *<>
```

Predefined messages must be supplied with a descriptive text, in addition to the message text itself. This in order to be able to navigate among the predefined messages. No destination is given.

```
=== SMS Menu ======== P28
1.    Open Inbox
2.    Open Outbox
3.    Open Canned
4.    Write Message
5.    Write SR Message
6.    Write SR BrCast Msg
7.    Write Canned Message
8.    Clear Message box

====Choose from list ===
Cancel
Clear Inbox
Clear Outbox
Clear Predef.box
```

The **Clear message** box supports deletion of all messages in the Inbox, the Outbox or the Predefined Messages box.

3.5 Alarms

```
=== ALARMS =========== P3
  Own Ship

CHANGED NAVST            1230
Utc Lost                 1200
```

The **Alarm** page displays the active alarms in the system. Active, not acknowledged alarms are displayed in capital letters. Acknowledged alarms are displayed in lowercase. When the alarm condition ceases to exist, the alarm is removed from the list.

```
=== ALARMS =========== P3
  Own Ship

CHANGED NAVST            1230
utc lost                 1200



====Choose from list ===
Acknowledge
Acknowledge ALL
```

When an **alarm is selected**, the selected or all alarms can be acknowledged.

```
=== ALARMS =========== P3
  Own Ship3

ACK LR MSG          15/5 1230
Utc Lost            15/5 1200
```

Long Range messages will appear in the LR alarm list. Selecting this item will display the Long Range page described under Long Range history.

3.6 Adjusting brightness and contrast

Press BACK and ENTER buttons simultaneously to adjust brightness and contrast. This will display a service menu. Use the buttons to select function and the wheel to adjust the settings. Press BACK to exit and keep changes.

4 TECHNICAL SPECIFICATIONS

4.1 Health, environment and safety

Operation or troubleshooting of Seatex AIS 100 equipment will not imply any risk for high voltages, explosions or exposure to gas. The Seatex AIS 100 is compliant with IEC 60950/EN60950 standards regarding product safety (low voltage) and IEC 60945/EN60945 standards on electromagnetic compatibility (immunity/radiation), vibration and climatic conditions.

4.2 Restrictions in guarantee

The liability of the manufacturer is limited to repair of the Seatex AIS 100 only under the terms and conditions stated in reference [1], and excludes consequential damages such as customer's loss of profit or damage to other systems traceable back to Seatex AIS 100 malfunction. The warranty does not cover malfunctions of the Seatex AIS 100 resulting from the following conditions:

a) The customer has opened the mobile station.
b) Over-voltage or incorrect power connection.

4.3 Physical dimensions

AIS 100 MKD unit

Dimensions: .....See Figure 4
Type: .....Integrated keypad/display
Backlit display and keys: .....Adjustable

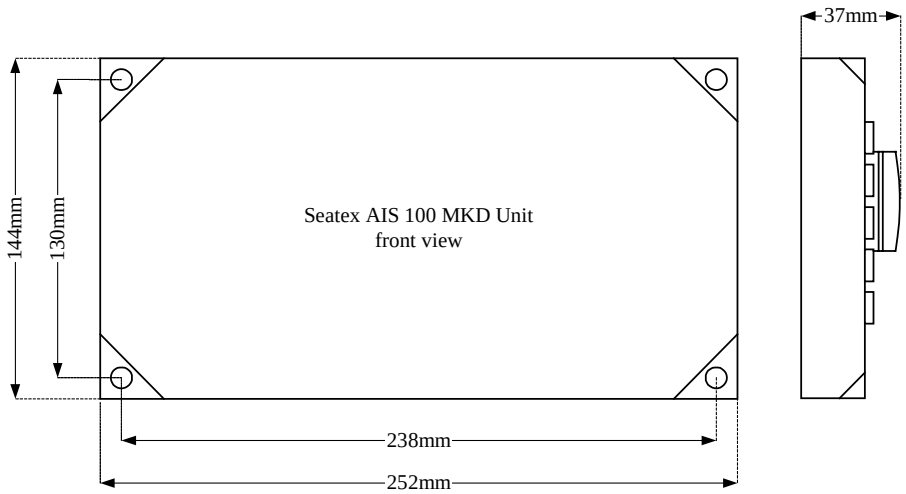

Figure 4 MKD unit dimensions

Mobile station

Dimensions: ..... See Figure 5
Colour: ..... Black NCS S9000-N

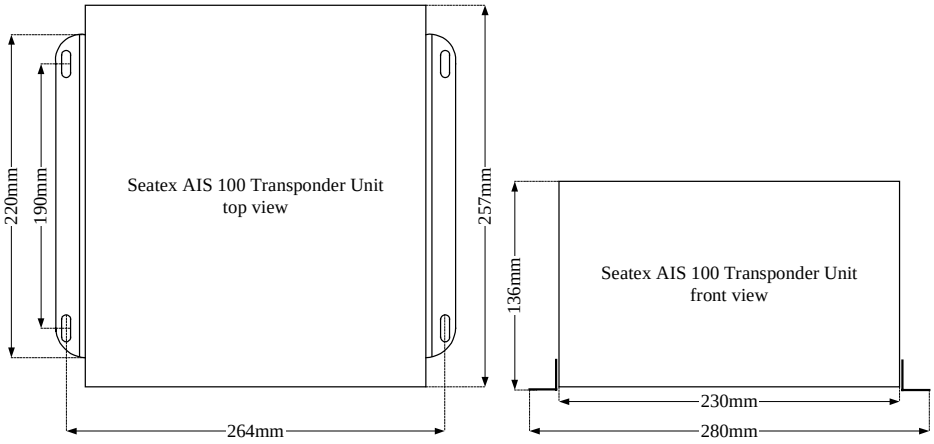

Figure 5 Mobile station dimensions

VHF radio

Number of transmitters: 1
Number of receivers: 3
Channel spacing: ..... 12.5 or 25 kHz
Frequency range: ..... 156 - 165 MHz
Transmitter power: ..... 2 W or 12 W nominal (selectable)
AIS 1 (Channel 87B): ..... 161.975 MHz
AIS 2 (Channel 88B): ..... 162.025 MHz
DSC receiver: ..... 156.525 MHz

Environmental specifications

Enclosure material: ..... Anodised aluminium
Enclosure protection: IP40
Operating temp. range: ..... -15 to +55 ºC
Operating humidity: ..... < 95% relative, non-condensing
Storage temp. range: ..... -15 to +55 ºC
Storage humidity: ..... < 60% RH
Vibration: ..... Displacement < 1 mm from 2 Hz to 13 Hz
Vibration: ..... Acceleration < 7 m/s^2 from 13 Hz to 100 Hz

GPS receiver

Type: ..... Garmin 25 LP
Operating frequency (reception only): ..... 1575.42 MHz ± 10 MHz

AIS 100 connection box

Dimensions: ..... See Figure 6
Voltage input: ..... 24 V DC (nominal) range 18 – 35 V

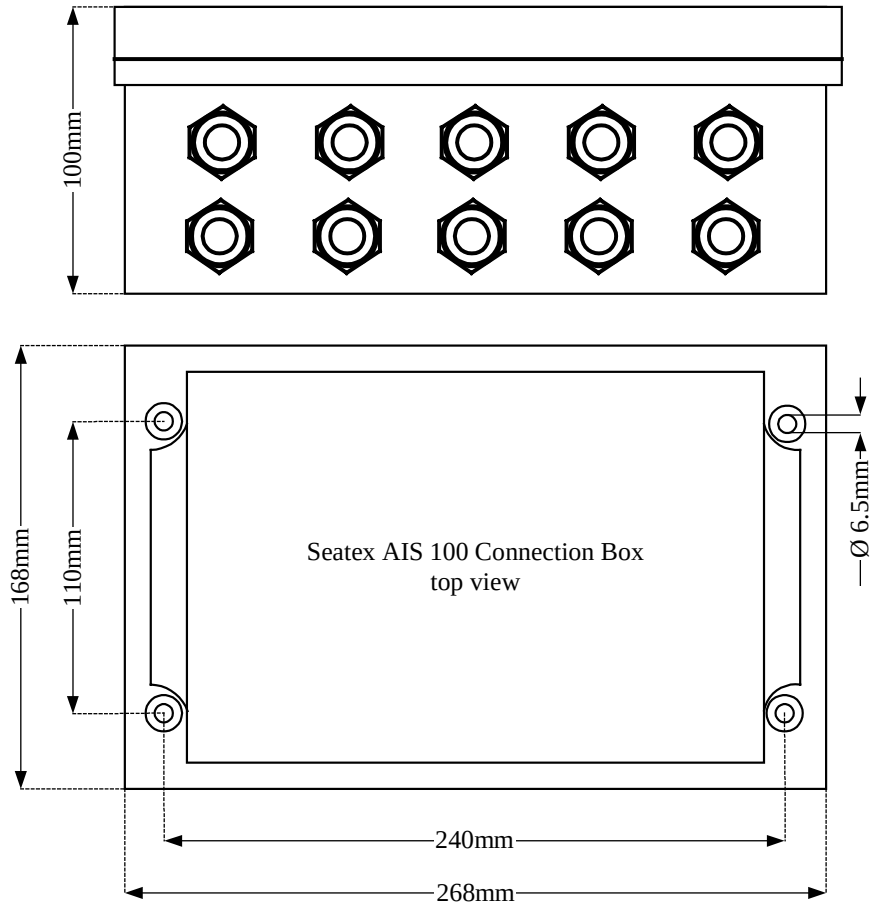

Figure 6 Connection box dimensions

Power

Voltage input: ..... 24 V DC (nominal) range 18 – 35 V
Power consumption: ..... 50 W peak, approx. 30 W continuous
Batteries: ..... No internal batteries

VHF antenna

Height: .....1400 mm
Weight:.....2.2 kg with clamping brackets
Colour: ..... Polyurethane lacquer, white

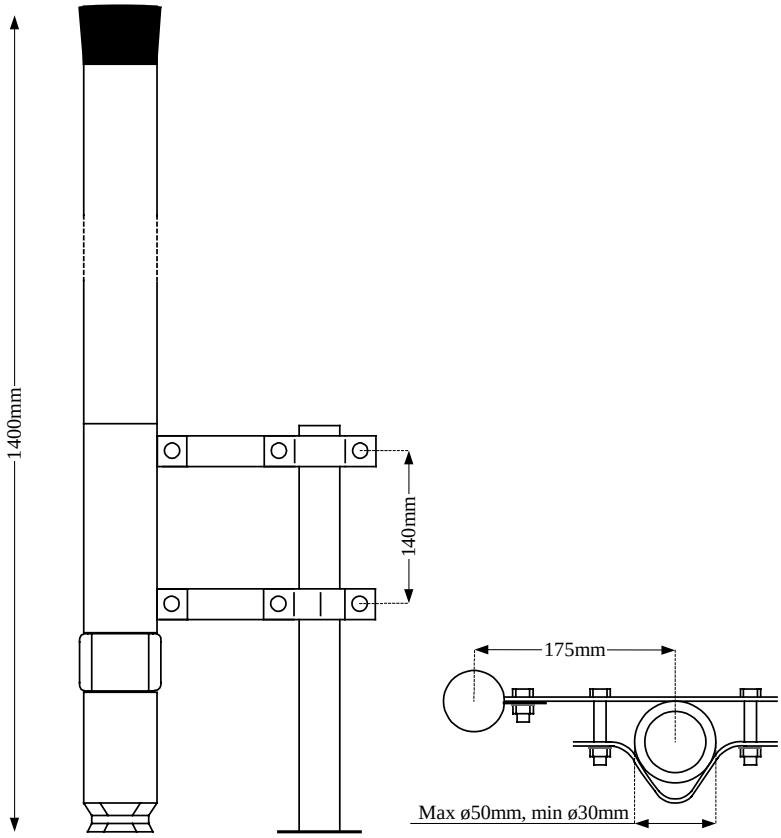

Figure 7 VHF antenna

GPS antenna

Height: ..... 70 mm
Diameter: ..... 78 mm
Weight:..... 400 g
Voltage input: ..... 5 V DC from the mobile station

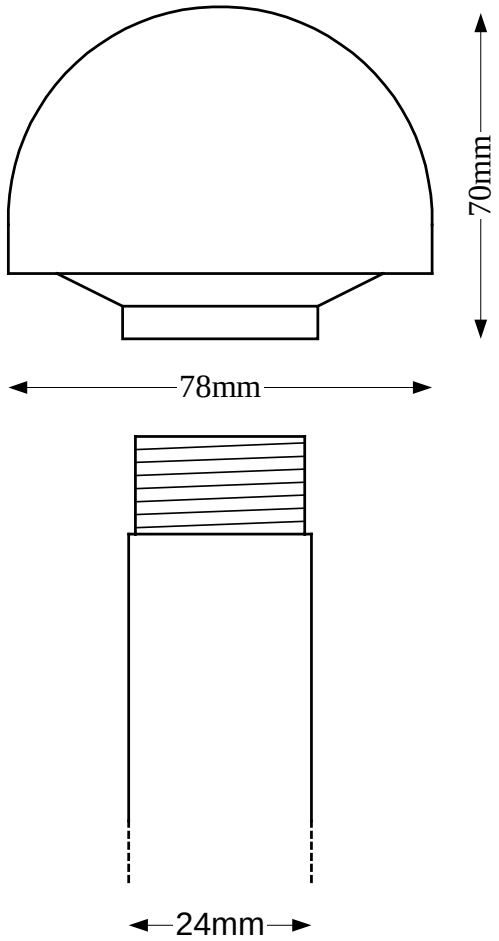

Figure 8 GPS antenna and pole dimensions

Blank page

5 INSTALLATION

5.1 General

This section provides detailed information required to install the Seatex AIS 100 system properly. The installation of the Seatex AIS 100 comprises installation of the components, cable pulling and termination of interface cables. After connecting the different components and applying power, the unit needs to be configured before final tests in order to ensure proper operation of the system.

Unpacking and handling

Care should be taken when unpacking and handling the equipment. A visual inspection should be made to ensure that the equipment has not been damaged during shipment and that all parts are present according to the packing list. A standard scope of supply for a basic Seatex AIS 100 system includes:

- MKD
- Mobile station with cable for connection to the MKD
- Connection box with cable for connection to the mobile station
- GPS antenna
- VHF antenna

Installation distribution

As installation costs may exceed the costs of the mobile station itself, we recommend that most of the installation is carried out by the vessel crew. This manual contains detailed installation instructions.

Installations that can be carried out by the vessel crew:

- Mounting the AIS VHF antenna
- Pulling the VHF cable from the VHF antenna to the mobile station
- Applying connectors to the VHF antenna cable and connecting to the VHF antenna
- Mounting the AIS GPS antenna
- Pulling the GPS cable from the GPS antenna to the mobile station
- Applying connectors to the GPS antenna cable and connecting to the GPS antenna
- Mounting the AIS mobile station, the MKD unit and the connection box
- Connecting the MKD unit to the mobile station using the supplied cable
- Connecting the connection box to the mobile station using the supplied cable
- Preparing cable for pilot plug from junction box to pilot location

- Preparing power cable from power source to the connection box

Installations that should be carried out by authorised personnel:

- Connecting power to the connection box and applying power to the mobile station
- Providing position interface from the vessel main GPS/GNSS sensor to the AIS mobile station
- Providing heading interface from the vessel main heading sensor to the AIS mobile station
- Termination of pilot plug cable in junction box
- Installation of pilot plug
- Providing other interfaces from external sensors to the AIS mobile station
- Configuring the AIS mobile station
- Verifying that the unit works satisfactory in accordance with the IMO requirements

In the following you will find detailed descriptions on how to install the Seatex AIS 100.

5.2 AIS 100 MKD

Typically the MKD unit is installed in a dedicated hole in one of the bridge consoles or fitted to the bulkhead at a place where the information easily can be monitored by the navigator. For the physical installation, screws can be mounted in the four holes hidden behind the cover on each corner of the unit or used to fasten the bracket following the MKD. Ensure enough space behind the MKD unit for connecting the Amphenol connector properly without bending the cable.

Figure 9 Rear side of the MKD unit and interconnection plug

The connector can be connected to any of the two inputs on the MKD. The table below gives the pin layout on the display side of the MKD connector. Amphenol connector type is C091 11H006 801 2 (Male Crimp contacts are: Amphenol type ZN01 015 0005 (2)).

Signal name	**D-sub 9-pin ref (male, crimp)**	**Pair**	**Wire colour**	**Display connector (MKD)**
Bus-	7	2	Brown	1
Bus+	2	2	White	2
V System -	1	1	Black	4
V System +	6	1	White	5

Note! *The colour codes are according to Seatex supplied cable.*

Figure 10 The Amphenol connector

CAUTION! ***Short circuit on the MKD connector may cause permanent damage to the mobile station.***

5.3 AIS 100 mobile station

Before installing the mobile station, ensure that the unit will have proper ventilation and that there is sufficient space at the rear side for GPS and VHF cable termination as well as the interconnection cable from the connection box.

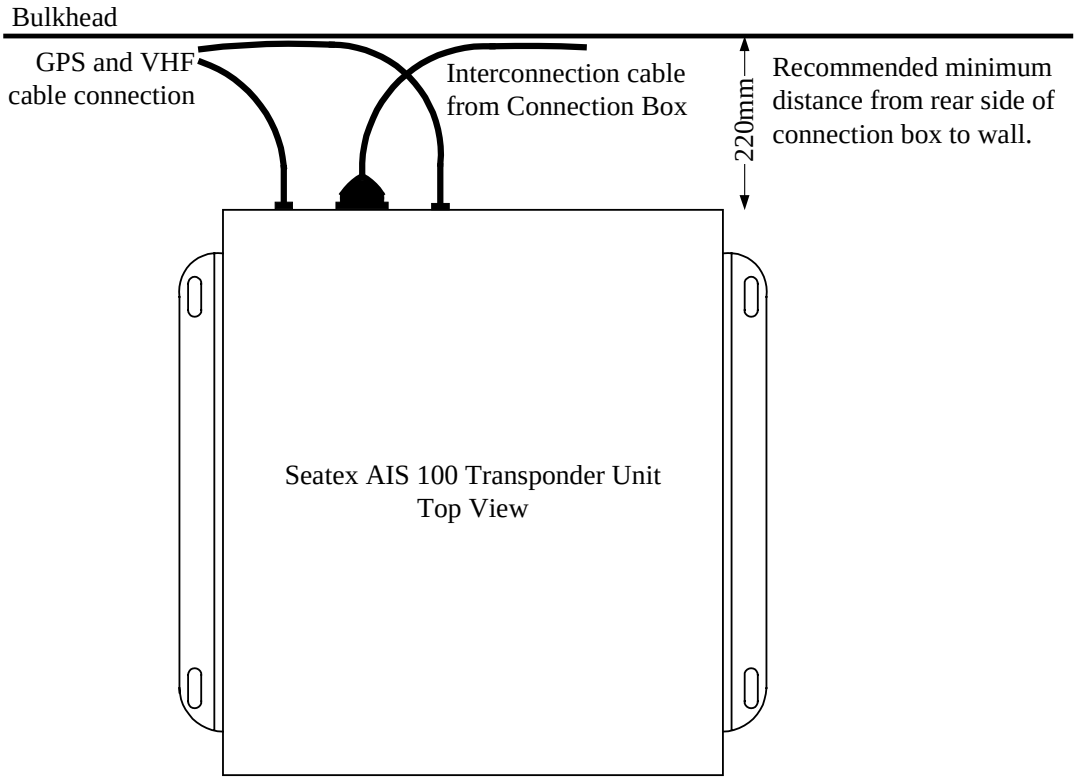

Figure 11 Recommended free space to rear side of mobile station

When installing the mobile station in a rack or onto the deck/bulkhead, ensure that the unit is properly secured. Clamps are recommended to be used to secure antenna, power and data cables connected to the mobile station.

Internal interface connectors

The mobile station interfaces both the MKD and the connection box. The GPS antenna cable is connected to the rear side of the mobile station for signal reception to the internal GPS receiver. The VHF antenna is also connected to the mobile station for VHF signal reception and transmission.

Figure 12 Rear side of mobile station

The rear panel contains the connectors for interfacing to external sensors. The table below describes the type and use of the different connectors.

Connector	Type	Connected To
Display	9-pin D-Sub male	MKD
Data/power	50-pin D-Sub	Data/power, internal use
GPS	TNC-connector female	GPS antenna
VHF	N-connector female	VHF antenna

For connecting the MKD unit to the mobile station a D-sub 9 pin connector is used. The table below shows the wiring of the connector.

Signal name	D-sub 9-pin ref (male, crimp)	Pair	Wire colour	Display connector (MKD)
Bus-	7	1	Brown	1
Bus+	2	1	White	2
V System -	1	2	Black	4
V System +	6	2	White	5

Figure 13 The 9-pin D-sub plug

5.4 AIS 100 connection box

When installing the connection box, ensure that there is sufficient space behind the unit so that cable termination from the mobile station as well as external sensors can be done properly. Fasten the connection box to the deck or bulkhead.

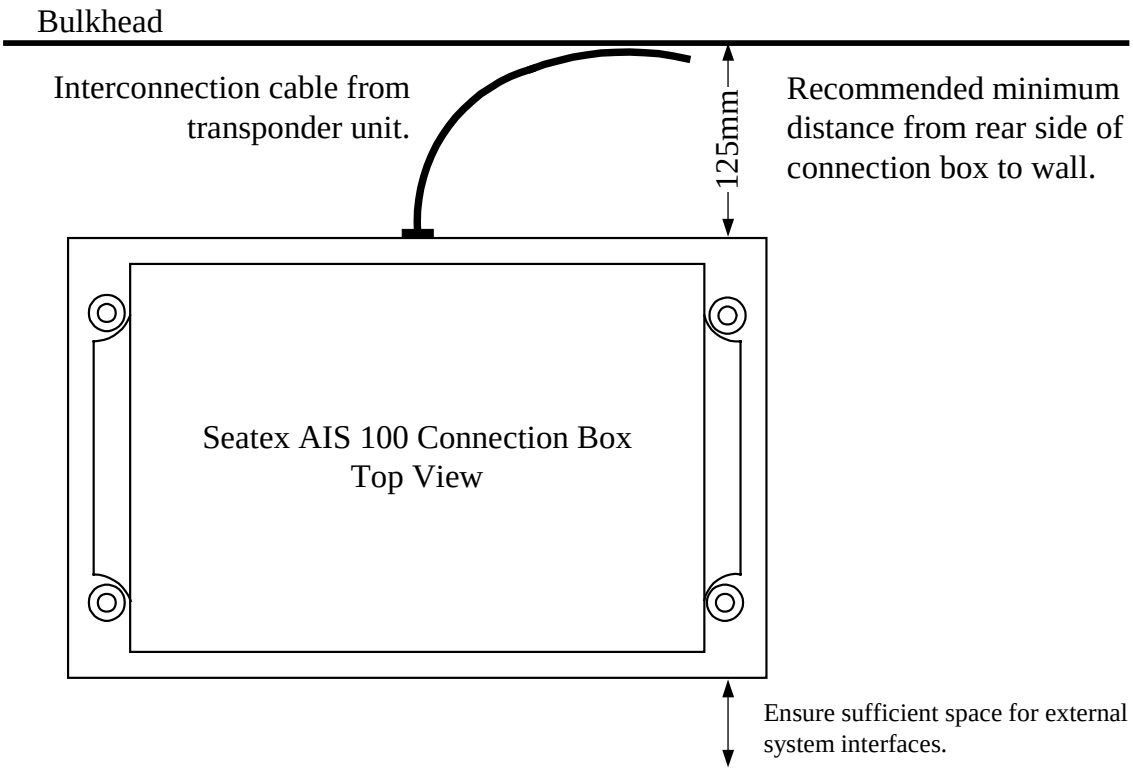

Figure 14 Recommended free space to rear side of connection box

Connection box screw terminals

In the connection box, pins 37 and 38 are connected together, and pins 39 and 40 are connected together with a connection bridge (please note that the + and GND are paired, so the numbering in the last row: 37, 39, 38 and 40 is correct!). If the power conductors are minimum one square millimetre, they can be connected to pins 38 and 40 only.

Signal name	**Pair**	**Wire colour**	**Connection box**
Pilot_RD(B)	1	Black	1
Pilot_RD(A)	1	Brown	2
Pilot_TD(B)	2	Black	3
Pilot_TD(A)	2	Green	4
Pilot_C	3	Black	5
PI_RD(B)	4	Blue	6
PI_RD(A)	4	Black	7
PI_TD(B)	5	Grey	8
PI_TD(A)	5	Red	9
PI_C	3	Orange	10
LR_RD(B)	6	Brown	11
LR_RD(A)	6	Red	12

Signal name	**Pair**	**Wire colour**	**Connection box**
LR_TD(B)	7	Green	13
LR_TD(A)	7	Red	14
LR_C	8	Green	15
Chassis	8	Yellow	36
SENS4_RD(B)	9	Orange	16
SENS4_RD(A)	9	Yellow	17
SENS4_C	10	Blue	18
SENS3_RD(B)	11	Black	19
SENS3_RD(A)	11	Grey	20
SENS3_C	10	Yellow	21
SENS2_RD(B)	12	White	22
SENS2_RD(A)	12	Grey	23
SENS2_C	13	White	24
SENS1_RD(B)	14	Green	25
SENS1_RD(A)	14	White	26
SENS1_C	13	Brown	27
ALM_NC	15	Orange	28
ALM_C	15	White	29
LAN_RX-	16	Blue	30
LAN_RX+	16	White	31
LAN_TX-	17	Red	32
LAN_TX+	17	Orange	33
COM1_RXD	18	Red	34
COM1_TXD	18	Blue	35
EXT_GND	19	Brown	37
EXT _24V+	19	Yellow	39
EXT_GND	20	Black	38
EXT_24V+	20	Red	40

Figure 15 The 50-pin plug

50-pin D-Sub

The data/power connector, which connects to the rear of the AIS 100 Mobile station, is a 50 pin D-Sub female. The pin layout is given in the table below.

Signal	Pin no.	Pair
Pilot_RD(A)	18	1
Pilot_RD(B)	1	1
Pilot_TD(A)	2	2
Pilot_TD(B)	34	2
Pilot_C	19	3
PI_RD(A)	3	4
PI_RD(B)	35	4
PI_TD(A)	36	5
PI_TD(B)	20	5
PI_C	4	3
LR_RD(A)	37	6
LR_RD(B)	21	6
LR_TD(A)	22	7
LR_TD(B)	5	7
LR_C	38	8
Chassis	10	8
SENS4_RD(A)	23	9
SENS4_RD(B)	6	9
SENS4_C	39	10

Signal	Pin no.	Pair
SENS3_RD(A)	24	11
SENS3_RD(B)	7	11
SENS3_C	40	10
SENS2_RD(A)	25	12
SENS2_RD(B)	8	12
SENS2_C	41	13
SENS1_RD(A)	26	14
SENS1_RD(B)	9	14
SENS1_C	42	13
ALM_N1	48	15
ALM_N2	49	15
LAN_RX-	17	16
LAN_RX+	50	16
LAN_TX-	16	17
LAN_TX+	33	17
COM1_RXD	27	18
COM1_TXD	43	18
EXT_GND	13	19
EXT_24V+	46	19
EXT_GND	12	20
EXT_24V+	45	20

Note! *RD(A) is low relative to RD(B) when idle.*
TD(A) is low relative to TD(B) when idle.

5.5 External cabling of data signals

Shielded twisted pair cables shall be used for the high-speed serial data ports. The recommended wiring (the figures below are excerpts from IEC 61162-2, ed. 1) is as shown on the drawings. The A, B and C designation correspond with the data signals as listed in the tables on the preceding pages. There may be several listeners (receivers) but only one talker (transmitter). For long lines we recommend to use a terminating resistor (120 Ohm between A' and B' at the receiving end). Avoid stubs or make them as short as possible. The common wire designated "C" is the signal ground reference and this wire shall be isolated from the outer shielding. The outer cable shield shall be continuous (unbroken) through the installation, but shall not be terminated to any part of the receiver.

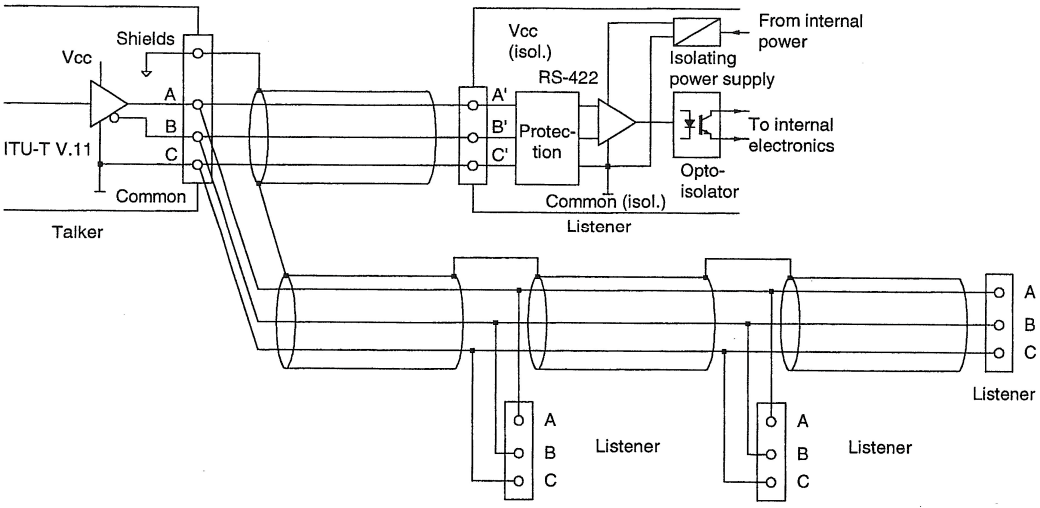

Figure 16 Talker and listener cabling – data/shield

Shielded twisted pair cable with third-wire is shown below. The common "C" wire may be one wire of a pair of another port's common connection wire "C", if they have the same destination.

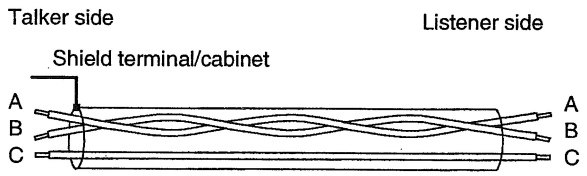

Figure 17 Third wire cabling

When the AIS connection box is used, the cable shields will be continuous from the mobile station to the external installation when the external cables' shield is properly terminated in the nipples' metal tongues.

5.6 AIS 100 VHF antenna

The range for receiving VHF signals relates directly to the height of the antenna above sea level as well as the general on-board conditions for reception and transmission of radio signals. For optimum AIS radio performance the following should be taken into consideration:

VHF antenna installation

- It is recommended that the AIS VHF antenna should be placed in a position with a minimum of 2 metres in horizontal direction from constructions made of conductive materials.
- The antenna should not be installed close to any large vertical obstruction and there should be a free view of the horizon through 360 degrees.
- The antenna should be installed safely away from interfering high power energy sources like radar and other transmitting radio antennas, preferably at least 3 metres away from and out of the transmitting beam and there should not be more than one antenna on the same level.
- The antenna should be mounted directly above or below the ships primary VHF radiotelephone antenna, with no horizontal separation and with a minimum of 2 metres vertical separation. If located on the same level as other antennas, the distance apart should be at least 10 metres.

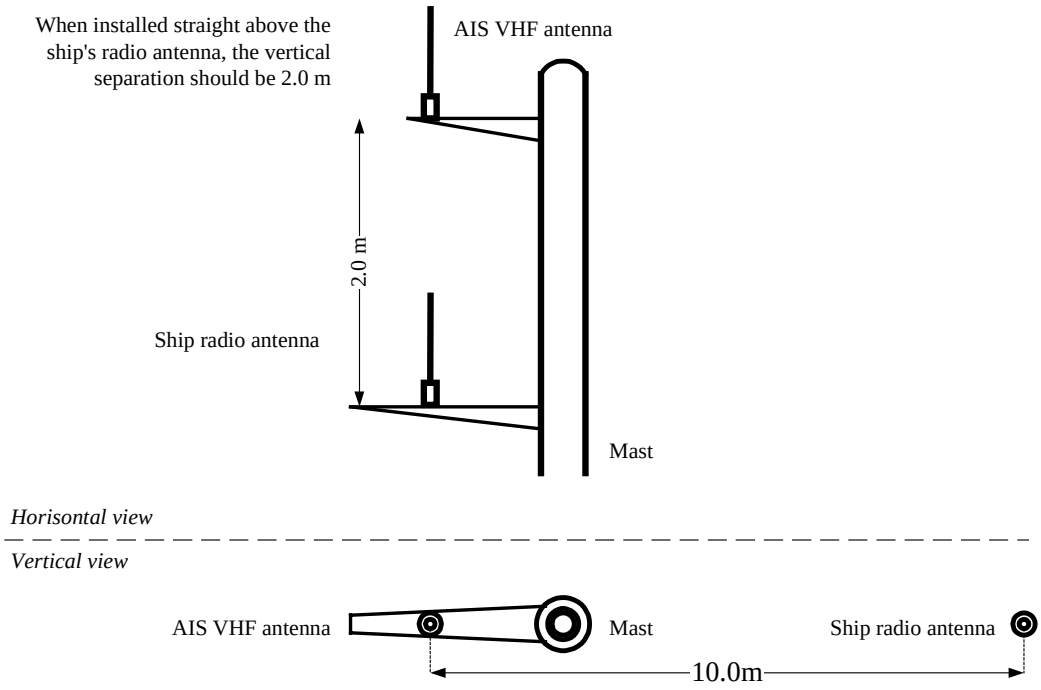

Figure 18 Recommended VHF antenna installation

Antenna cabling

- The cable should be kept as short as possible to minimise attenuation of the signal. A double shielded coaxial cable equal or better than RG-214 is recommended.
- All outdoor installed connectors on the coaxial cables should be fitted with preventive isolation such as shrink stocking with glue to protect against water penetration into the antenna cable.
- Coaxial cables should not be exposed to sharp bends, which could change the characteristic impedance of the cable. The minimum bend radius should be 5 times the cable diameter.

VHF antenna cable connection

The following procedure should be used for proper mounting of cable connectors:

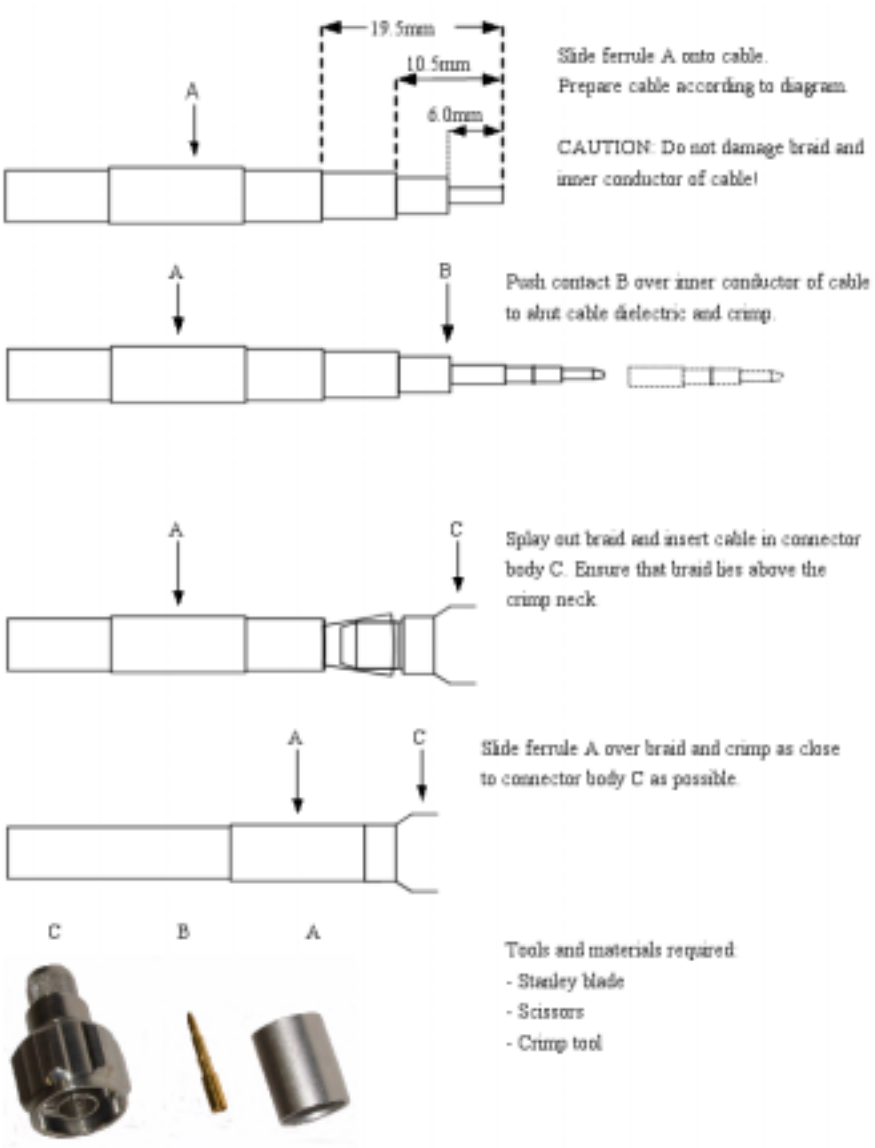

Figure 19 VHF and GPS antenna cable connector termination

VHF antenna cable lengths

Maximum cable lengths depend on the attenuation factors of the cables used. The total attenuation of the VHF antenna cables should be less than 3 dB for proper operation as higher attenuation will reduce the coverage area of the mobile station. The cable connectors must be of a type that is designed for the actual cable.

Cable type	Max. length
RG214	30 metres
Low loss ½" Superflex	100 metres

5.7 AIS 100 GPS antenna

GPS antenna installation

Optimum location of the GPS antenna is important to ensure continuously track of all visible GPS satellites used for time synchronisation and computation of backup position fix. The following should be taken into consideration during installation:

- The GPS antenna must be installed where it has a clear view of the sky and thus the objective is to see the horizon freely through 360 degrees with a vertical observation of 5 to 90 degrees above the horizon.
- Small diameter obstructions, such as masts and booms, do not seriously degrade signal reception but such objects must not eclipse more than a few degrees of any given bearing.
- Locate the antenna at least 3 metres away from and out of the transmitting beam of high power transmitters (S-band radar and/or Inmarsat systems). This includes the ship's own AIS VHF antenna if it is located separately.

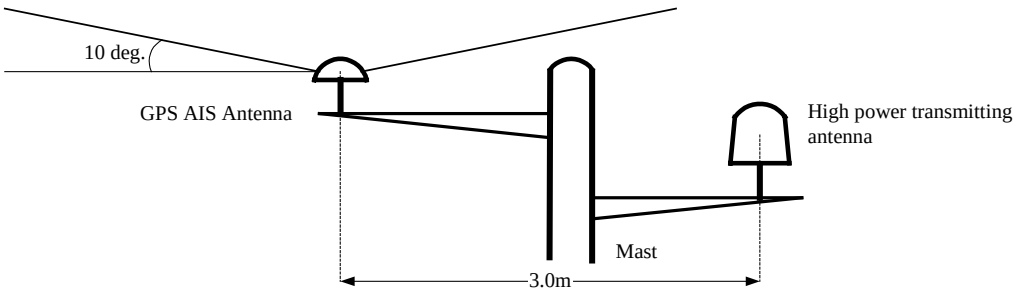

Figure 20 Recommended GPS antenna installation

GPS antenna offset arms

Position data for the GPS antenna needs to be input to the AIS as a part of the configuration settings. The figure below shows the offset arms to be configured.

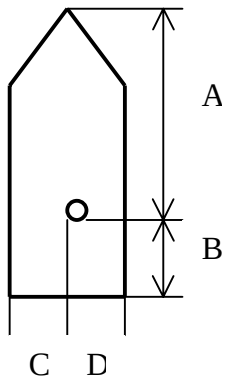

Figure 21 GPS antenna offset arms

GPS antenna cabling

- To achieve optimum performance, the gain of the antenna pre-amplifier should match the cable attenuation. The resulting installation gain (pre-amplifier gain – cable attenuation) should be within 0 to 10 dB.
- The coaxial cable between the antenna and the AIS mobile station should be routed directly in order to reduce electromagnetic interference effects.

GPS antenna cable lengths

The GPS antenna cable should have a total attenuation of less than 10 dB as higher attenuation may degrade the quality and accuracy of the position data.

Cable type	Max. length
RG214	30 metres
Low loss ½" Superflex	100 metres

Applying power

After the mechanical and electrical installation is completed the coaxial cables should be checked for short circuit between centre conductor and shield (ground) with the antenna disconnected. If not short-circuited, power could be applied to the mobile station.

Sealing of GPS and VHF antenna connectors

- Ensure that the outdoor antenna connectors are wrapped with waterproof self-vulcanising tape.
- Stretch the tape to double length and start wrapping a bit down on the cable.
- Wrap the tape all over the connectors and, if possible, seal it with electric coating.
- An alternate way of waterproofing is to use heat shrinkable hose with glue.
- The hose should cover the whole connector and part of the cable and finally it should be sealed with electric coating.

5.8 Internal alarm system

The Seatex AIS 100 has a built-in alarm functionality. The alarm is generated in different ways:

- Alarm generated by the BIIT.
- Alarm generated by the sensor part.
- Alarm generated by the MKD.

An alarm could cause different actions taken by the system, depending on the nature of the alarm. An alarm generated by the BIIT could stop transmission of messages. An alarm will open the alarm relay, which can be used to trigger an external alarm. There will also be generated an alarm message on the PI port which can be read on an MKD, if connected, or on an external interfaced system.

There are two types of alarm messages, which can be output on the PI and LAN port. An ALM message, e.g. $AIALM, is output when an error situation arises. A TXT message, e.g. $AITXT, is output when there is an indicator message. An error situation may arise if there is a TX malfunction, while an indicator message may arise when differential corrections are lost. The ALM LED in the front of the AIS 100 will be lit if an error situation arises.

6 EXTERNAL INTERFACES

6.1 External interfaces

Increased navigational performance can be achieved by interfacing the Seatex AIS 100 to an ECDIS, ECS, radar, gyro or heading sensor. All sensors are connected through the AIS 100 connection box using serial line communication. This is normally done during installation.

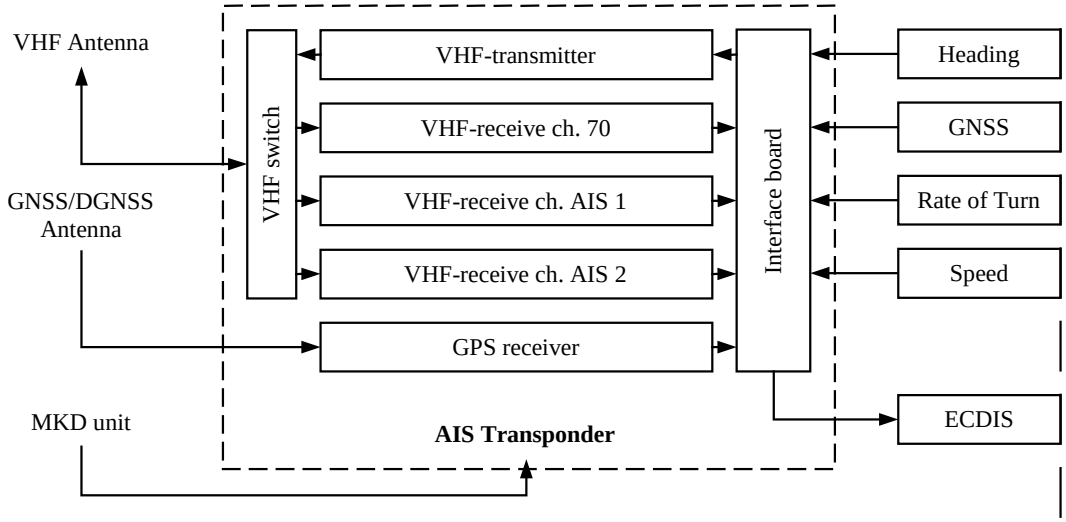

Figure 22 Interfaces to the Seatex AIS 100 mobile station

6.2 Presentation interface

The presentation interface consists of two physical ports, called PI and pilot port. The PI port provides a primary port for connection to onboard equipment such as ECDIS, radar etc. The pilot port provides a port for connection to the ship's pilot equipment, service equipment, etc. Both ports are functionally equivalent.

Port configuration

The PI and pilot port have the following default settings:

Baud Rate	Parity	Bits	Stop Bit
38400	N	8	1

The baud rate is configurable to 57600.

Input sentences

The AIS is capable of receiving and processing the following IEC 61162-1 sentences on the presentation interface:

Sentence	Content
VSD	Voyage static data
SSD	Ship static data
ABM	Addressed binary message
BBM	Broadcast binary message
AIR	AIS interrogation message
ACA	AIS channel assignment command
ACK	Acknowledgement message

Proprietary input sentences

The AIS is capable of receiving and processing the following proprietary IEC 61162-1 sentences on the presentation interface:

Sentence	Content
MMSI	MMSI number
IMO	IMO number
PORT	Serial port configuration parameters

Output sentences

The AIS is capable of generating and sending the IEC 61162-1 sentences on the presentation interface:

Sentence	Content	Transmission interval
ABK	Acknowledgement message	Upon reception of messages 7 and 13, and when sending message 15
VDO	VHF Data link own message	1 Hz nominal
ALR	Alarm messages	30 seconds/1 min.
TXT	Indication messages	When change of status
ACA	AIS channel assignment command	When change of status
VDM	VHF Data link message	When receiving on VDL
LRI	Long-range interrogation	When LR request received & when LR response sent
LRF	Long-range function identification	When LR request received & when LR response sent
LR1	Long-range response	When LR response sent
LR2	Long-range response	When LR response sent
LR3	Long-range response	When LR response sent

6.3 Long range interface

The Long Range interface provides a two-way interface for equipment that provides for long-range communications, such as Inmarsat.

Port configuration

The Long Range port has the following default settings:

Baud Rate	Parity	Bits	Stop Bit
4800	N	8	1

The baud rate is configurable from 1200 to 57600.

Input sentences

Long Range interrogation of the AIS unit can be accomplished through use of two IEC 61162-1 sentences.

Sentence	Content
LRI	Long-range interrogation
LRF	Long-range function identification

Output sentences

The Long Range reply from the AIS is accomplished through the use of four IEC 61162-1 sentences.

Sentence	Content	Transmission interval
LRF	Long-range function identification	When LR response sent
LR1	Long-range response	When LR response sent
LR2	Long-range response	When LR response sent
LR3	Long-range response	When LR response sent

6.4 Sensor input

Port configuration

The sensor inputs Sensor1, Sensor2 and Sensor3 are equivalent and the default settings are as follows:

Baud Rate	Parity	Bits	Stop Bit
4800	N	8	1

The baud rate is configurable from 1200 to 57600.

Input sentences

The following IEC 61162-1 sentences can be received and processed on each of the three sensor inputs:

Sentence	Contents
GGA	Position, TOD, position quality (diff/non-diff)
GNS	Position, TOD, position quality (diff/non-diff)
GLL	Position, TOD, position quality (diff/non-diff)
DTM	Datum
VBW	SOG, COG (derived from speed components)
VTG	SOG, COG
RMC	Position, TOD, position quality (diff/non-diff), SOG, COG
HDT	Heading
GBS	RAIM indicator
ZDA	TOD and Date
OSD	Position, TOD, SOG, COG, Heading
ROT	Rate of turn

In case the sensor inputs are configured with redundant data, the tables below describe the priorities of the redundant data.

Priority of Position

Priority	Sentence
1	RMC
2	GNS
3	GGA
4	GLL

Priority of SOG and COG

Priority	Sentence
1	RMC
2	OSD
3	VBW
4	VTG

Priority of Heading

Priority	Sentence
1	OSD
2	HDT

Priority of Rate of Turn

Priority	Sentence
1	ROT
2	OSD (derived from heading)
3	HDT (derived from heading)

6.5 New IEC 61162-1 sentences

This subchapter contains a description of proposed IEC 61162-1 sentences due to AIS. Reference is made to IEC 61193-2, 2001, annex B2.

ABK – Addressed and binary broadcast acknowledgement

The ABK-sentence is generated when a transaction, initiated by reception of an ABM, AIR, or BBM sentence, is completed or terminated.

This sentence provides information about the success or failure of a requested ABM broadcast of either ITU-R M.1371 messages 6 or 12. The ABK process utilises the information received in ITU-R M.1371 messages 7 and 13. Upon reception of either a VHF Data-link message 7 or 13, or the failure of messages 6 or 12, the AIS unit delivers the ABK sentence to the external application.

This sentence is also used to report to the external application the AIS unit's handling of the AIR (ITU-R M.1371 message 15) and BBM (ITU-R M.1371 messages 8 and 14) sentences. The external application initiates an interrogation through the use of the AIR-sentence, or a broadcast through the use of the BBM sentence. The AIS unit generates an ABK sentence to report the outcome of the AIR or BBM broadcast process.

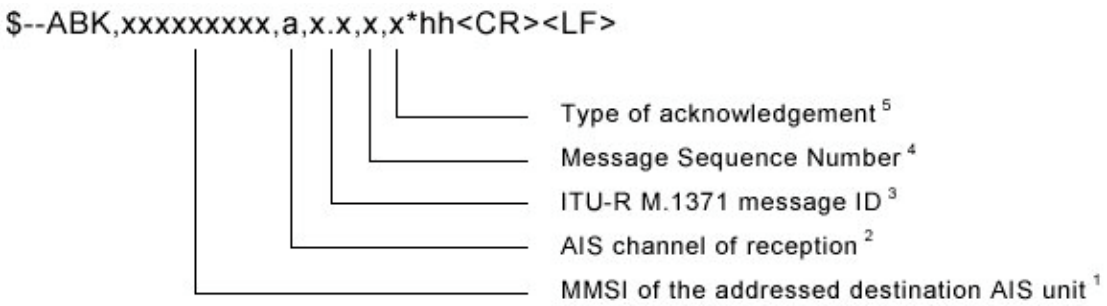

NOTE 1 Identifies the distant addressed AIS unit involved with the acknowledgement. If more than one MMSI are being addressed (ITU-R M.1371 message 15), the MMSI of the first distant AIS unit, identified in the message, is the MMSI reported here. When the

Message ID is a general broadcast (ITU-R M.1371 messages 8 or 14), this field is null.

NOTE 2 Indication of VDL channel upon which Message ID 7 or 13 acknowledgement was received. An "A" indicates reception on channel A. A "B" indicates reception on channel B. If not available, field is null.

NOTE 3 This indicates to the external application the type of ITU-R M.1371 message that this ABK sentence is addressing. Also see the message IDs listed in NOTE 4.

NOTE 4 The message sequence number, together with the ITU-R M.1371 message ID and MMSI of the addressed AIS unit, uniquely identifies a previously received ABM, AIR, or BBM sentence. Generation of an ABK-sentence makes a sequential message identifier available for reuse. The ITU-R M.1371 Message ID is used to determine the origin of the message sequence identifier number. The following table lists the origins by message ID:

ITU-R M.1371 Message ID	**Message Sequence Number source**
6	sequential message identifier from ABM-sentence, IEC 61162-1
7	addressed AIS unit's message 7, sequence number, ITU-R M.1371
8	sequential message identifier from BBM-sentence, IEC 61162-1
12	sequential message identifier from ABM-sentence, IEC 61162-1
13	addressed AIS unit's message 13, sequence number, ITU-R M.1371
14	sequential message identifier from BBM-sentence, IEC 61162-1
15	no source, field shall be null

NOTE 5 Acknowledgements provided are:

0 = message (6 or 12) successfully received by the addressed AIS unit,

1 = message (6 or 12) was broadcast, but no acknowledgement by the distant addressed AIS unit,

3 = message could not be broadcast,

4 = requested broadcast of message (8, 14, or 15) has been successfully completed, late reception of a message 7 or 13 acknowledgement "addressed to own-ship" MMSI – identified by; destination MMSI, acknowledgement source MMSI, message sequence identifier, and message type. Late reception means that the AIS unit did not have an

acknowledgement process active for the acknowledgement that was received.

ABM – Addressed Binary and safety related message

This sentence supports ITU-R M.1371 messages 6 and 12. It provides an external application with a means to exchange data using an AIS. The message data is defined by the application only – not the AIS. This message offers great flexibility for implementing system functions that use the AIS like a communications device. After receiving this sentence, the AIS initiates a radio broadcast on the VHF Data Link (VDL) of either message 6 or 12. The AIS will make up to four broadcasts of the message. The actual number will depend on the reception of an acknowledgement from the addressed "destination" AIS. The default time between retries is 4 s. Retries will not be attempted more frequently than 4 s. Retries stop when the appropriate acknowledgement (See ITU-R M.1371 messages 7 and 13.) is received. The AIS will make up to 4 broadcasts, original broadcast plus three retires. This process could take 32 s to complete.

The success or failure of the reception of this broadcast by the intended AIS unit is confirmed through the use of the "Addressed and binary Broadcast Acknowledgement (ABK)" sentence formatter, and the processes that support the generation of an ABK-sentence. The AIS is also limited in the amount of encapsulated data that can be sent in each slot and frame. If the length of the message would exceed five slots, or the AIS broadcast would exceed the limit of 20 RATDMA slot transmissions for the current frame, the AIS will return an ABK-sentence with an acknowledgement of "2" – message could not be broadcast.

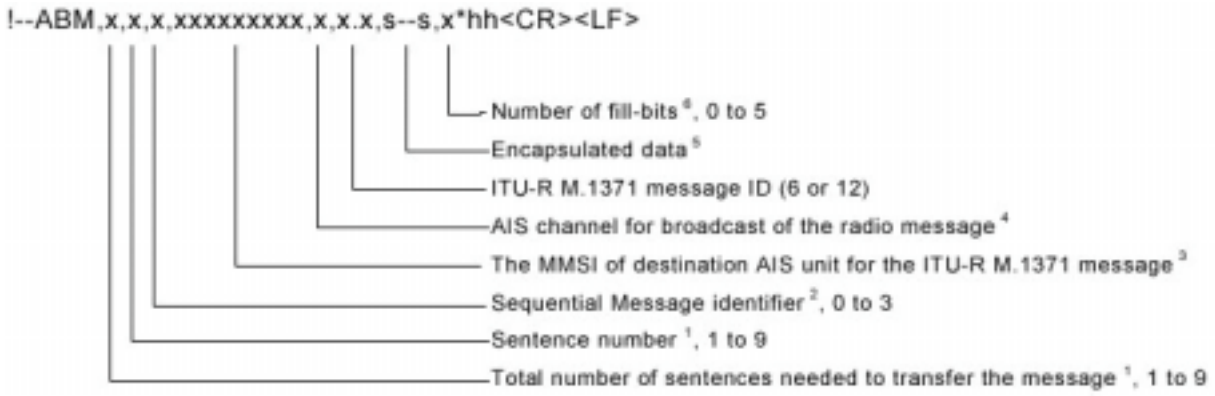

NOTE 1 The total number of sentences required to transfer the binary message data to the AIS unit. The first field specifies the total number of sentences used for a message, minimum value 1. The second field

identifies the order of this sentence in the message, minimum value 1. All sentences contain the same number of fields. Successive sentences may use null fields for fields that have not changed, such as fields 4, 5, and 6.

NOTE 2 This sequential message identifier serves two purposes. It is both an IEC 61162-1 "sequential message identifier field," and it is the "sequence number" utilised by the ITU-R M.1371 in message types 6 and 12. The range of this field is restricted by ITU-R M.1371 to the range of 0 to 3. This sequential message identifier and the destination MMSI uniquely identifies a message. The sequential message identifier may be reused after the "ABK" acknowledgement for that sequence number is provided by the destination AIS unit. (See the ABK-sentence formatter.)

NOTE 3 The MMSI of the AIS unit which is the destination of the message.

NOTE 4 The AIS channel that shall be used for the broadcast: 0 = no broadcast channel preference, 1 = Broadcast on AIS channel A, 2 = Broadcast on AIS channel B, 3 = Broadcast two copies of the message – one copy sent on channel A and another copy sent on channel B.

NOTE 5 This is the content of the "binary data" parameter for ITU-R M.1371 message 6, or the "Safety related Text" parameter for message 12. The first sentence may contain up to 48 "6-bit" symbols (288 bits). Following sentences may contain up to 60 valid "6-bit" symbols (360 bits), if fields 4, 5, and 6 are unchanged from the first sentence and set to null. The actual number of "6-bit" symbols in a sentence must be adjusted so that the total number of characters in a sentence does not exceed the "82-character" limit.

NOTE 6 To encapsulate, the number of binary bits must be a multiple of six. If it is not, one to five "fill bits" are added. This parameter indicates the number of bits that were added to the last 6-bit coded character. This value shall be set to zero when no "fill bits" have been added. This cannot be a null field.

ACA – AIS regional channel assignment message

An AIS unit can receive regional channel management information four ways: ITU-R M.1371 message 22, DSC telecommand received on channel 70, manual operator input, and an ACA-sentence. The AIS unit may store channel management information for future use. Channel management information is applied based upon the actual location of the AIS unit. An AIS unit is "using" channel management information when the information is being used to manage the operation of the VHF receivers and/or transmitter inside the AIS unit.

This sentence is used to both enter and obtain channel management information. When sent to an AIS unit, the ACA-sentence provides regional information that the unit stores and uses to manage the internal VHF radio. When sent from an AIS unit, the ACA-sentence provides the current channel management information retained by the AIS unit. The information contained in this sentence is similar to the information contained in an ITU-R M.1371 message 22. The information contained in this sentence directly relates to the "Initialisation Phase" and "Dual Channel operation and Channel management" of the AIS unit as described in ITU-R M.1371.

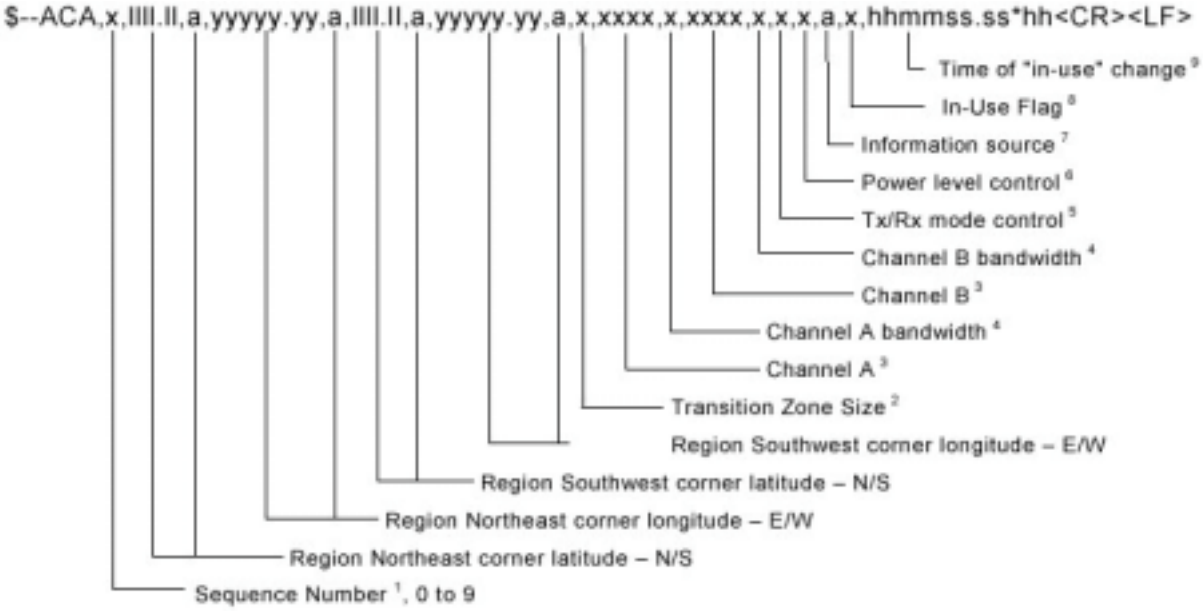

NOTE 1 This is used to bind the contents of the ACA and ACS sentences together. If provided by the AIS, the ACS sentence shall immediately follow the related ACA sentence, and both sentences shall contain the same sequence number. The AIS generating ACA and ACS sentences shall increment the sequence number by one each time an ACA/ACS pair is created. After "9" is used, the sequence numbering process shall begin again from "0". If the sequence numbers do not match, the information contained in an ACS sentence is not related to the information in an ACA sentence. The ACS sentence may be used to respond to an "ACA Query-sentence" (See IEC 61162-1, § 5.3.2.). The AIS shall respond by providing ACA/ACS pairs for each of the stored regional operating settings. At any given time, the maximum number of pairs is eight. When an ACS sentence is not sent following an ACA sentence, the sequence number may be null.

NOTE 2 Value of 1 nautical mile to a value of 8 nautical miles (with a resolution of 1 nautical mile)

NOTE 3 VHF channel number, see ITU-R M.1084, Annex 4

NOTE 4 Value of 0, bandwidth is specified by channel number, see ITU-R M.1084, Annex 4
Value of 1, bandwidth is 12,5 kHz.

NOTE 5 Value of 0, transmit on channels A and B, receive on channels A and B
Value of 1, transmit on channel A, receive on channels A and B
Value of 2, transmit on channel B, receive on channels A and B
Value of 3, do not transmit, receive on channels A and B
Value of 4, do not transmit, receive on channel A
Value of 5, do not transmit, receive on channel B

NOTE 6 Value of 0, high power
Value of 1, low power

NOTE 7 Source identifiers:
A, ITU-R M.1371 message 22: Channel Management addressed message,
B, ITU-R M.1371 message 22: Channel Management broadcast geographical area message,
C, IEC 61162-1 AIS Channel Assignment sentence,
D, DSC Channel 70 telecommand, and
M, operator manual input.
This field should be null when the sentence is sent to an AIS.

NOTE 8 This value is set to indicate that the other parameters in the sentence are "in-use" by an AIS unit at the time that the AIS unit sends this sentence. A value of "0" indicates that the parameters are not "in-use," and a value of "1" indicates that the parameters are "in-use." This field should be null when the sentence is sent to an AIS.

NOTE 9 This is the UTC time that the "in-use" flag changed to the indicated state. This field should be null when the sentence is sent to an AIS.

AIR – AIS interrogation request

This sentence supports ITU-R M.1371 message 15. It provides an external application with the means to initiate a request for specific ITU-R M.1371 messages from distant mobile or base AIS stations. A single sentence can be used to request, as many as, two messages from one AIS unit and one message from a second AIS unit. The message types that can be requested are limited. The complete list of messages that can be requested can be found within the message 15 description in ITU-R M.1371. Improper requests may be ignored.

The external application initiates the interrogation. The external application is responsible for assessing the success or failure of the interrogation. After receiving this sentence, the AIS initiates a radio broadcast (on the VHF Data Link) of a message 15 – Interrogation. The success or failure of the interrogation broadcast is determined by

the external application's assessment of the combined reception of the ABK-sentence and future VDM-sentences provided by the AIS via the Presentation Interface. After receiving this AIR-sentence, the AIS should broadcast a message 15 within 4 s, and the addressed AIS should take no more than an additional 4 s to respond – a total of 8 s.

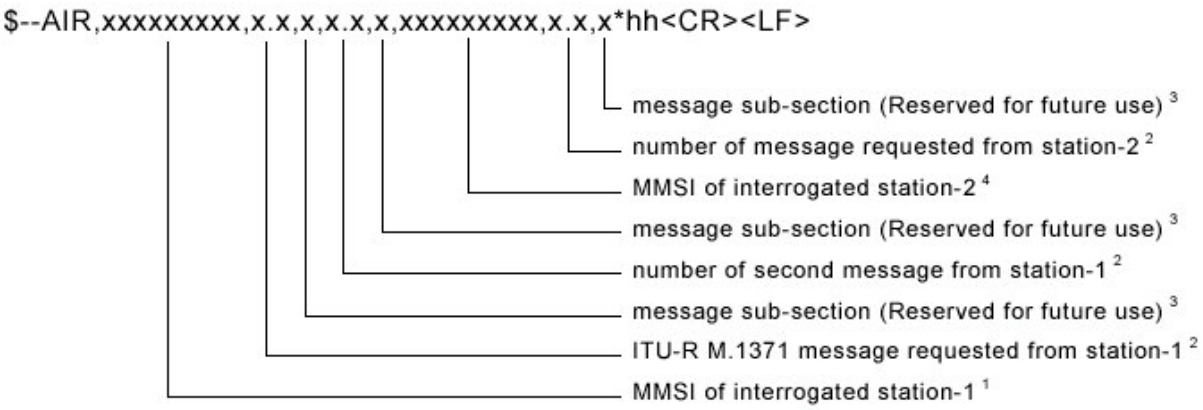

NOTE 1 Identifies the first distant AIS being interrogated. Two messages can be requested from the first AIS.

NOTE 2 Examples of messages that may be requested from a distant mobile AIS station include:
Message 3, Position Report,
Message 5, Ship Static and Voyage related data,
Message 9, Standard SAR Aircraft Position Report,
Message 18, Standard Class B Equipment Position Report,
Message 19, Extended Class B Equipment Position Report, and
Message 21, Aids-to-Navigation Report.

Examples of messages that may be requested from a distant AIS base station include:
Message 4, Base Station Report,
Message 17, GNSS Broadcast Binary Message, (all available corrections are requested),
Message 20, Data Link Management Message,
Message 22, Channel Management.

NOTE 3 This field is used to request a message that has been further sub-divided into alternative data structures. When requesting messages with alternative data structures, this message subsection identifier must be provided, so that the correct sub-division of the message data is provided. If the message structure is not sub-divided into different structures, this field should be null.

NOTE 4 This identifies the second distant AIS being interrogated. Only one message may be requested from the second AIS. The MMSI of the

second AIS may be the same MMSI as the first AIS. This technique can be used to request a third message from station-1.

BBM – Broadcast binary message

This sentence supports generation of an ITU-R M.1371 Binary Broadcast Message (message 8) or Safety Related Broadcast Message (message 14). It provides an external application with a means to broadcast data, as defined by the application only – not the AIS. This message offers great flexibility for implementing system functions that use the AIS like a digital broadcast device. After receiving this sentence, the AIS initiates a VHF broadcast of either message 8 or 14 within 4 s. (Also, see the ABK-sentence.)

The success or failure of the broadcast confirmed through the use of the "Addressed and binary Broadcast Acknowledgement (ABK)" sentence formatter, and the processes that support the generation of an ABK-sentence. The AIS is limited in the amount of encapsulated data that can be sent in each slot and frame. If the length of the message would exceed five slots, or the AIS broadcast would exceed the limit of 20 RATDMA slot transmissions for the current frame, the AIS will return an ABK-sentence

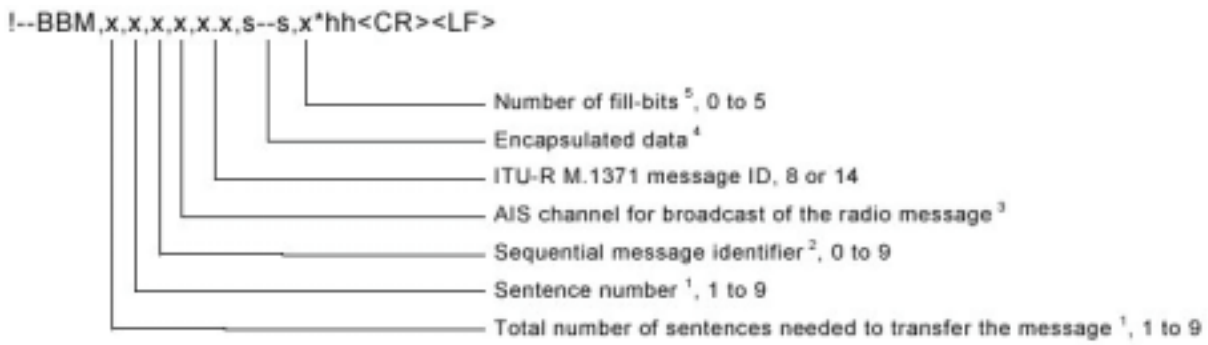

NOTE 1 The total number of IEC 61162-1 sentences needed to transfer the contents of the binary message to the AIS. The first field specifies the total number of sentences used for a message, minimum value 1. The second field identifies the order of this sentence in the message, minimum value 1. All sentences contain the same number of fields. Successive sentences may use null fields for fields that do not change – such as fields 4 and 5.

NOTE 2 The Sequential Message Identifier provides a message identification number from 0 to 9 that is sequentially assigned as needed. Note that this is only a sequential message identifier. This is used differently than the "Message sequence identifier" of an ABM sentence. This identifier is incremented for each new multi-sentence message. The count resets to 0, after 9 is used. For the contents of a message 8 or 14 requiring multiple sentences, each sentence of the message contains

the same Sequential Message Identification number. This number is used to link the separate sentences containing portions of the same encapsulated data. This allows for the possibility that other sentences might be interleaved with the message sentences that, taken collectively, contain a single message 8 or 14. This number also links a future ABK-sentence acknowledgement to the appropriate BBM-sentence. (See ABK, NOTE 4.)

NOTE 3 The AIS channel that shall be used for the broadcast: 0 = no broadcast channel preference, 1 = Broadcast on AIS channel A, 2 = Broadcast on AIS channel B, 3 = Broadcast two copies of the message – one on channel A and another sent on channel B.

NOTE 4 This is the content of the "binary data" parameter for ITU-R M.1371 message 8 or the "Safety related Text" parameter for message 14. The first sentence may contain up to 58 "6-bit" symbols (348 bits). The following sentences may contain up to 60 "6-bit" symbols (360 bits), if fields 4 and 5 are unchanged from the first sentence and set to null. The actual number of "6-bit" symbols in a sentence must be adjusted so that the total number of characters in a sentence does not exceed the "82-character" limit.

NOTE 5 To encapsulate, the number of binary bits must be a multiple of six. If it is not, one to five "fill bits" are added. This parameter indicates the number of bits that were added to the last 6-bit coded character. This value shall be set to zero when no "fill bits" have been added. This cannot be a null field.

LRI – Long-Range Interrogation

The long-range interrogation of the AIS is accomplished through the use of two sentences. The pair of interrogation sentences, a LRI-sentence followed by a LRF-sentence, provides the information needed by an AIS to determine if it must construct and provide the reply sentences (LRF, LR1, LR2, and LR3). The LRI-sentence contains the information that the AIS needs in order to determine if the reply sentences need to be constructed. The LRF-sentence identifies the information that needs to be in the reply sentences.

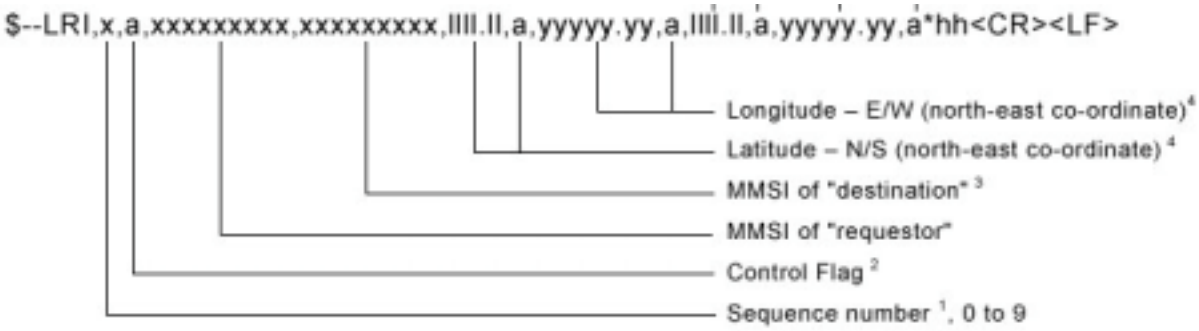

NOTE 1 This is used to bind the contents of the LRI and LRF sentences together. The LRF sentence shall immediately follow the LRI sentence and use the same sequence number. The requestor process shall increment the sequence number each time a LRI/LRF pair is created. The sequencing process shall continuously increment. After "9" is used, the process shall begin again at "0". If the LRI and LRF sequence numbers are different, the Long-range interrogation is not valid.

NOTE 2 The control flag is a single character that qualifies the request for information. The control flag affects the AIS unit's reply logic. The control flag cannot be a null field. When the Control Flag is "0", the AIS responds if either:

The AIS is within the geographic rectangle provided, **and**
The AIS has not responded to the requesting MMSI in the last 24 hours, **and**
The MMSI "destination" field is null.

or

The AIS unit's MMSI appears in the MMSI "destination" field in the LRI sentence.

When the Control Flag is "1", the AIS responds if:

The AIS is within the geographic rectangle provided.

NOTE 3 This is the nine-digit number that uniquely identifies the specific AIS that should respond. This field is null when the interrogation is for a geographic region. When addressing a specific AIS, it is not necessary to provide the geographic co-ordinates of the region.

NOTE 4 The geographic region being interrogated is a "rectangular" area defined by the latitude and longitude of the north-east and south-west corners. These fields should be null when interrogating a specific AIS. (See note 2.)

LRF – Long Range Function

This sentence is used in both long-range interrogation requests and long-range interrogation replies. The LRF-sentence is the second sentence of the long-range interrogation request pair, LRI and LRF (See the LRI-sentence.). The LRF-sentence is also the first sentence of the long-range interrogation reply. The minimum reply consists of a LRF-sentence followed by a LR1-sentence. The LR2-sentence and/or the LR3-sentence follow the LR1-sentence, if information provided in these sentences is requested in the interrogation. When the AIS creates the LRF-sentence for the long-range interrogation reply, fields 1, 2, 3, and 4 should remain as received in the interrogation; and field 5 (Function Reply Status) and a new checksum are added to the LRF reply sentence.

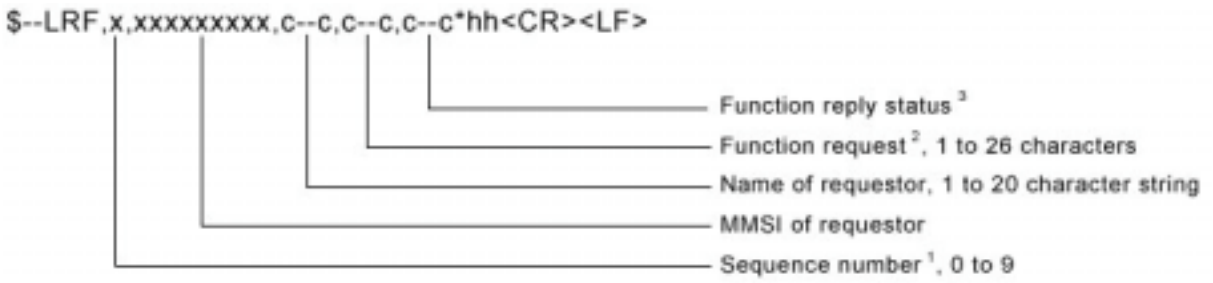

NOTE 1 This is used to bind the contents of the LRI and LRF sentences together. The LRF sentence shall immediately follow the LRI sentence and use the same sequence number. The requestor process shall increment the sequence number each time a LRI/LRF pair is created. After 9 is used, the process shall begin again from 0. The Long-range interrogation is not valid if the LRI and LRF sequence numbers are different.

NOTE 2 The Function request field uses alphabetic characters based upon IMO Resolution A.851(20) to request specific information items. Specific information items are requested by including their function identification character in this string of characters. The order in which the characters appear in the string is not important. All characters are upper case. Information items will not be provided if they are not specifically requested – even if available to the AIS. The IMO Resolution defines the use of all characters from A to Z, but not all of the defined information is available from the AIS. The following is a list of the function identification characters with the information they request:

A = Ship's: name, call sign, and IMO number
B = Date and time of message composition
C = Position
E = Course over ground
F = Speed over ground
I = Destination and Estimated Time of Arrival (ETA)

O = Draught
P = Ship/Cargo
U = Ship's: length, breadth, type
W = Persons on board

NOTE 3 The "Function Reply Status" field provides the status characters for the "Function Request" information. When a long-range interrogation request is originated, the "Function Reply Status" field should be null. The "Function Reply Status" characters are organised in the same order as the corresponding function identification characters in the "Function Request" field. The following is a list of the "Function Reply Status" characters with the status they represent:

2 = Information available and provided in the following LR1, LR2, or LR3 sentence,
3 = Information not available from AIS unit,
4 = Information is available but not provided (i.e. restricted access determined by ship's master),

LR1 – Long-range Reply with destination for function request "A"

The LR1-sentence identifies the destination for the reply and contains the information requested by the "A" function identification character. (See the LRF-sentence.)

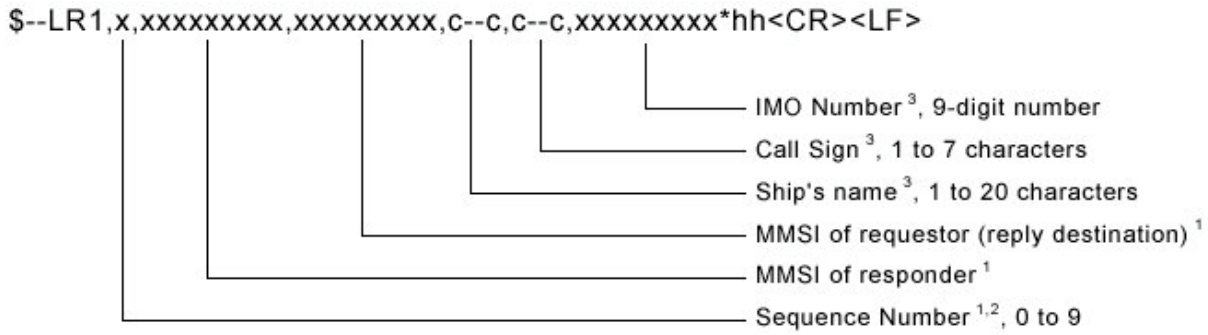

NOTE 1 The three fields, sequence number, MMSI of responder, and MMSI of requestor are always provided.

NOTE 2 The sequence number should be the same number as the sequence number of the LRI and LRF sentences that initiated this reply.

NOTE 3 The characters that can be used are listed in IEC 61162-1, table 2. Some characters in this table are the reserved characters listed in IEC 61162-1, table 1. Reserved characters may be used, but they must be represented using the "^-method" (See IEC 61162-1, § 5.1.3.). The individual information items shall be a null field, if any one of the following three conditions exist:

The information item was not requested.
The information item was requested, but it is not available.
The information item was requested, but it is not being provided.

LR2 – Long-range Reply for function requests "B, C, E, and F"

The LR2-sentence contains the information requested by the "B, C, E, and F" function identification characters. (See the LRF-sentence.)

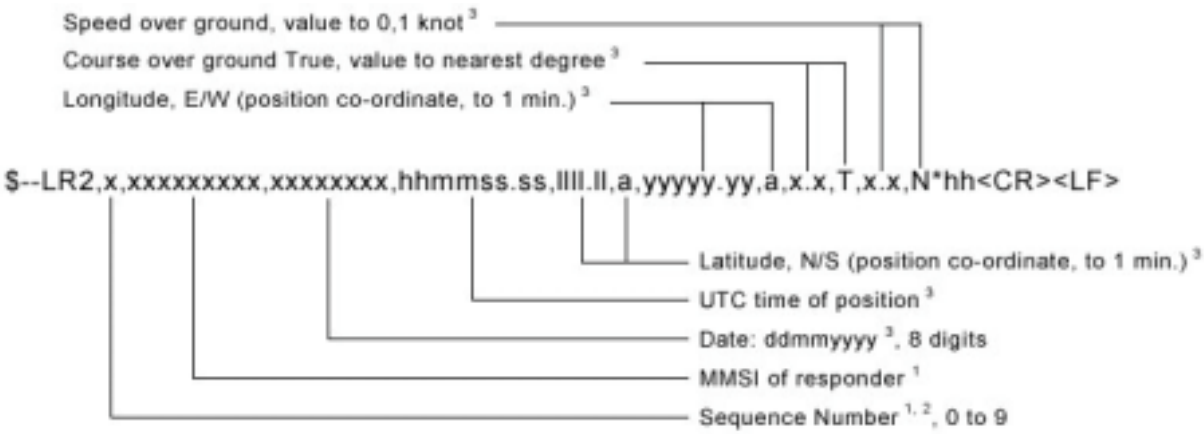

NOTE 1 If the sentence is used, the two fields, Sequence Number and MMSI of responder, are always provided.

NOTE 2 The sequence number should be the same number as the sequence number of the LRI and LRF sentences that initiated this reply.

NOTE 3 The individual information items shall be a null field if any of the following three conditions exist:

The information item was not requested.
The information item was requested, but it is not available.
The information item was requested, but it is not being provided.

LR3 – Long-range Reply for function requests "I, O, P, U and W"

The LR3-sentence contains the information requested by the "I, O, P, U, and W" function identification characters (see the LRF-sentence).

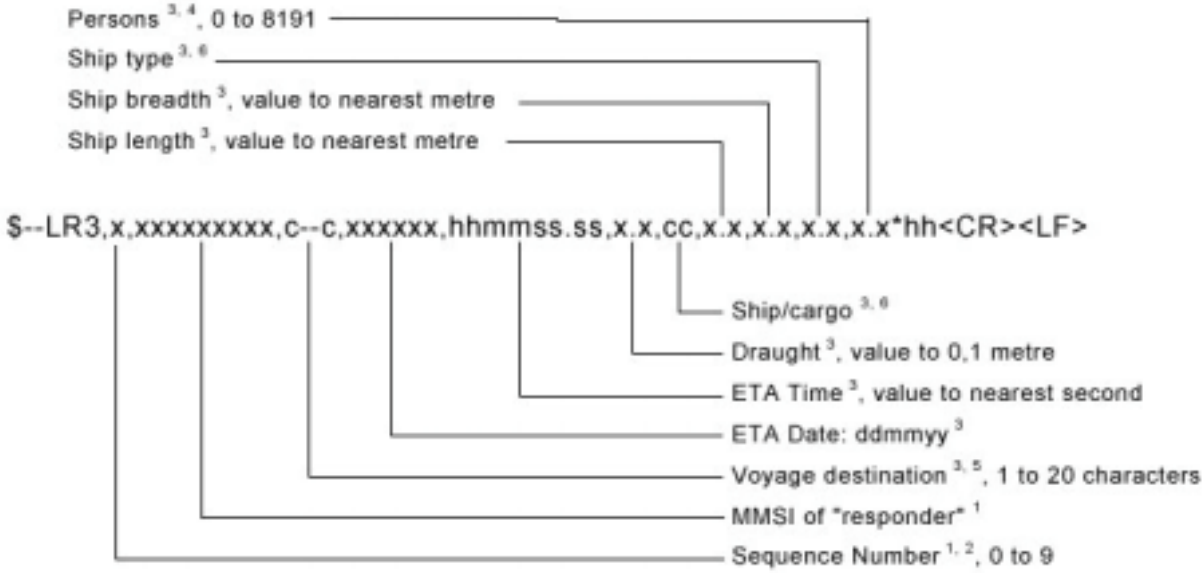

NOTE 1 If the sentence is used, the two fields, Sequence Number and MMSI of responder, are always provided.

NOTE 2 The sequence number should be the same number as the sequence number of the LRI and LRF sentences that initiated this reply.

NOTE 3 The individual information items shall be a null field if any of the following three conditions exist:
The information item was not requested,
The information item was requested but is not available, or
The information item was requested but is not being provided.

NOTE 4 Current number of persons on-board, including crew members: 0 to 8191.
0 = default (not available), 8191 = 8191 or more people.

NOTE 5 The characters that can be used are listed in IEC 61162-1, table 2. Some characters in this table are the reserved characters listed in IEC 61162-1, table 1. Reserved characters may be used, but they must be represented using the "^-method" (See IEC 61162-1, § 5.1.3.).

NOTE 6 See ITU-R M.1371:2000, table 17, parameter "Type of ship and cargo type" for the range of valid values available for this field.

SSD – Ship Static Data

This sentence is used to enter static parameters into a shipboard AIS. The parameters in this sentence support a number of the ITU-R M.1371 messages.

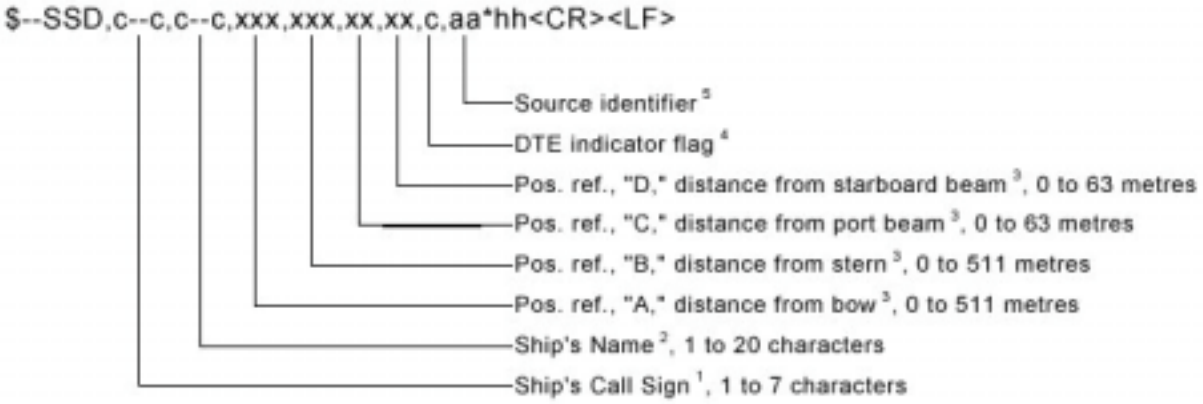

NOTE 1 Ship call sign. A null field indicates that the previously entered call sign is unchanged. The string of characters "@@@@@@@" are used to indicate that the call sign is not available.

NOTE 2 The characters that can be used in the name are listed in the ITU-R M.1371, table 14 (6-bit ASCII). Some of the acceptable characters in this 6-bit ASCII table are reserved characters under IEC 61162-1. They must be represented using the "^-method" (See IEC 61162-1, section 5.1.3.). A null field indicates that the previously entered name is unchanged. The string of characters "@@@@@@@@@@@@@@@@@@@@@@@@" are used to indicate that the ship's name is not available.

NOTE 3 These are the four dimensions from the bow, stern, port beam, and starboard beam to the horizontal reference point on the ship for which the current "position reports" are valid. The sum of A + B is the length of the ship in metres, and the sum of C + D is the width of the ship in metres (See ITU-R M.1371, message 5, "Reference Point for reported position and Dimensions of Ship."). If the reference point of "reported position" is not available, but the dimensions of the ship are available: A = C = 0 and B > 0 and D > 0. If neither the reference point for the reported position nor the dimensions of the ship are available: A = B = C = D = 0 (default). Use of a null field for A, B, C, and/or D indicates that the previously entered dimension for that parameter is unchanged. In many cases, the ship's reference point for "reported position" will be the location of the positioning antenna.

NOTE 4 The DTE indicator is an abbreviation for Data Terminal Equipment indicator. The purpose of the DTE indicator is to inform distant receiving applications that, if set to "available" the transmitting station conforms, at least, to the minimum keyboard and display

requirements. The DTE indicator is only used as information provided to the application layer – indicating that the transmitting station is available for communications. On the transmitting side, the DTE indicator may be set by an external application using this sentence. DTE indicator flag values are:
0 = Keyboard and display are a standard configuration, and communication is supported.
1 = Keyboard and display are either unknown or unable to support communication (default setting).

NOTE 5 The source identifier contains the "Talker ID" of the equipment at this location. The AIS may use the "Talker ID" to identify multiple sources of position data and to detect a change to the reference point on the ship.

VDM – VHF Data-link Message

This sentence is used to transfer the entire contents of a received AIS message packet, as defined in ITU-R M.1371 and as received on the VHF Data Link (VDL), using the "6-bit" field type. The structure provides for the transfer of long binary messages by using multiple sentences.

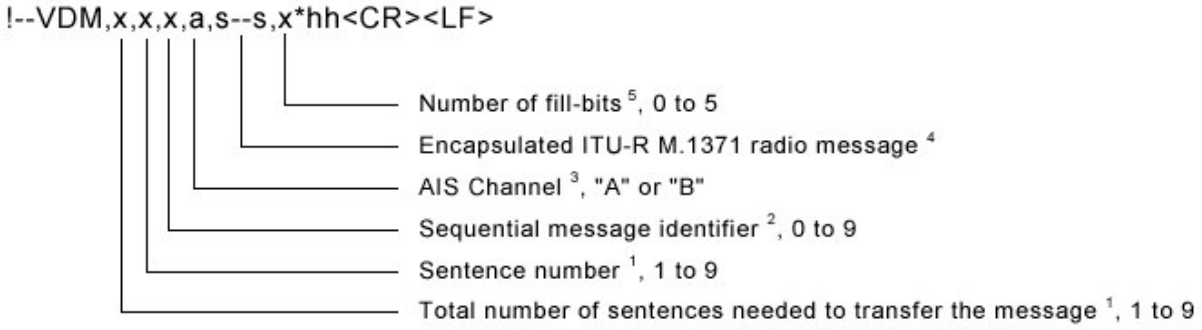

NOTE 1 The length of an ITU-R M.1371 message may be long and may require the use of multiple sentences. The first field specifies the total number of sentences used for a message, minimum value 1. The second field identifies the order of this sentence in the message, minimum value 1. These cannot be null fields.

NOTE 2 The Sequential message identifier provides a message identification number from 0 to 9 that is sequentially assigned and is incremented for each new multi-sentence message. The count resets to 0 after 9 is used. For a message requiring multiple sentences, each sentence of the message contains the same sequential message identification number. It is used to identify the sentences containing portions of the same message. This allows for the possibility that other sentences might be interleaved with the message sentences that, taken collectively, contain a single message. This field shall be a null field when messages fit into one sentence.

NOTE 3 The AIS message reception channel is indicated as either "A" or "B." This channel indication is relative to the operating conditions of the AIS when the packet is received. This field shall be null when the channel identification is not provided. The VHF channel numbers for channels "A" and "B" are obtained by using an ACA-sentence "query" of the AIS.

NOTE 4 The maximum string length of encapsulation is limited such that the total number of sentence characters does not exceed 82. This field supports a maximum of 62 valid characters for a message transferred using multiple sentences, and 63 valid characters for a message using a single sentence.

NOTE 5 To encapsulate, the number of binary bits must be a multiple of six. If it is not, one to five "fill bits" are added. This parameter indicates the number of bits that were added to the last 6-bit coded character. This value shall be set to zero when no "fill bits" have been added. This cannot be a null field.

VDO – VHF Data-link Own-vessel message

This sentence is used to provide the information assembled for broadcast by the AIS. It uses the six-bit field type for encapsulation. The sentence uses the same structure as the VDM sentence formatter.

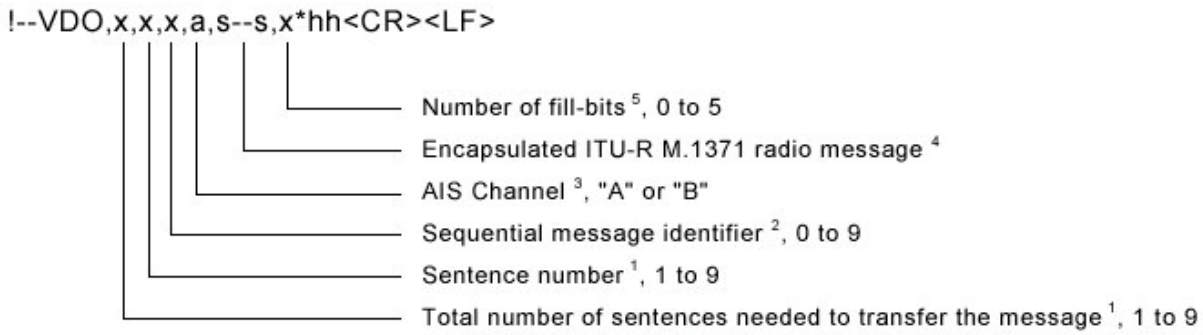

NOTE 1 The length of an ITU-R M.1371 message may be long and may require the use of multiple sentences. The first field specifies the total number of sentences used for a message, minimum value 1. The second field identifies the order of this sentence in the message, minimum value 1. These cannot be null fields.

NOTE 2 The Sequential message identifier provides a message identification number from 0 to 9 that is sequentially assigned and is incremented for each new multi-sentence message. The count resets to 0 after 9 is used. For a message requiring multiple sentences, each sentence of the message contains the same sequential message identification number. It is used to identify the sentences containing portions of the same message. This allows for the possibility that other sentences might be

interleaved with the message sentences that, taken collectively, contain a single message. This field shall be a null field when a message fits into one sentence.

NOTE 3 This is the channel used to broadcast the AIS message. The AIS channel field, set to either "A" or "B", indicates that the message was broadcast. If the message is not broadcast, the "AIS Channel" field shall be null. The VHF channel numbers for channels "A" and "B" are obtained by using an ACA-sentence "query" of the AIS.

NOTE 4 The maximum string length of encapsulation is limited such that the total number of sentence characters does not exceed 82. This field supports a maximum of 62 valid characters for a message transferred using multiple sentences, and 63 valid characters for a message using a single sentence.

NOTE 5 To encapsulate, the number of binary bits must be a multiple of six. If it is not, one to five "fill bits" are added. This parameter indicates the number of bits that were added to the last 6-bit coded character. This value shall be set to zero when no "fill bits" have been added. This cannot be a null field.

VSD – Voyage Static Data

This sentence is used to enter information about a ship's voyage. This information remains relatively static during the voyage. However, the information will frequently change from voyage to voyage. The parameters in this sentence support a number of the ITU-R M.1371 messages.

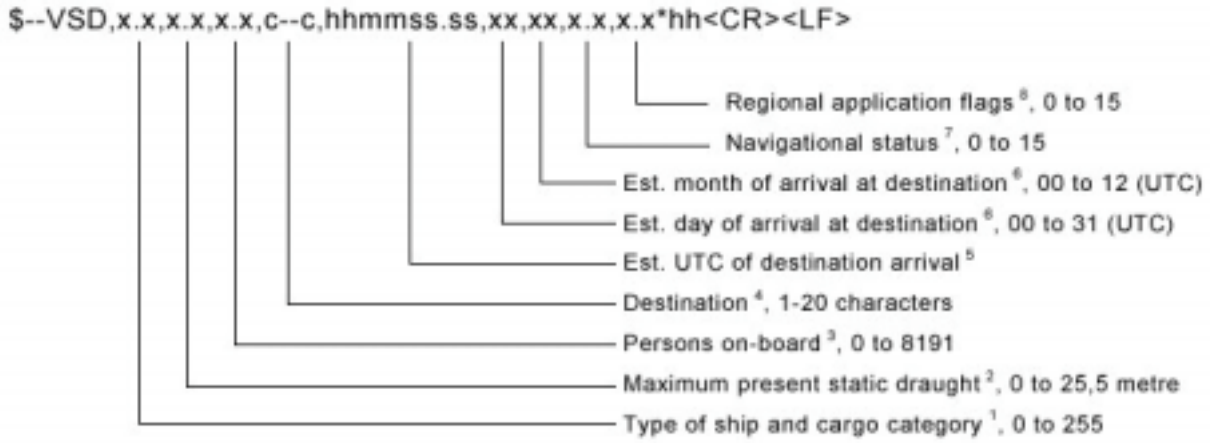

NOTE 1 Type of ship and cargo category are defined in ITU-R M.1371. The description of ship and cargo are indicated by a number. The values are defined in ITU-R M.1371, message 5. A null field indicates that this is unchanged.

NOTE 2 Draught is reported in the range of 0 to 25,5 metres. The value 0 = not available (default), and the value 25,5 indicates that the draught is 25,5 metres or more. Only values from 0 to 25,5 shall be accepted by the AIS. A null field indicates that this is unchanged.

NOTE 3 Number of persons on-board includes the crew. The value 0 = not available (default). The value 8191 = 8191 or more people. Only values from 0 to 8191 shall be accepted by the AIS. A null field indicates that this is unchanged.

NOTE 4 The characters that can be used in the destination are listed in the ITU-R M.1371, table 14 (6-bit ASCII). Some of the acceptable characters in this 6-bit ASCII table are reserved characters under IEC 61162-1. They must be represented using the "^-method" (See IEC 61162-1, section 5.1.3.). A null field indicates that the previously entered destination is unchanged. The string of characters "@@@@@@@@@@@@@@@@@@@@" are used to indicate that the ship's destination is not available.

NOTE 5 The UTC time of arrival field follows the "TIME" field type described in table 6 (IEC 61162-1). The two fixed digits of seconds are not broadcast by the AIS and should be set to "00". The optional decimal point and associated decimal fraction shall not be provided. The resulting time is a number with six fixed digits, "hhmm00". Leading zeros are always included for the hours and minutes. If the hour of arrival is not available, "hh" shall be set to 24. If the minute of arrival is not available, "mm" shall be set to 60. A null field indicates that this is unchanged.

NOTE 6 The day and month of arrival are in UTC. The day is a two-digit fixed number requiring leading zeros. The month is a two-digit fixed number requiring leading zeros. If the day of arrival is not available, "00" shall be the number for day. If the month of arrival is not available, "00" shall be the number for the month. A null field indicates that this is unchanged.

NOTE 7 The Navigational status is indicated using the following values, a null field indicates the status is unchanged (ref. ITU-R M.1371, Message 1, Navigational status parameter):

0 = under way using engine
1 = at anchor
2 = not under command
3 = restricted manoeuvrability
4 = constrained by draught
5 = moored
6 = aground
7 = engaged in fishing
8 = under way sailing
9 = reserved for High Speed Craft

10 = reserved for Wing In Ground
11 to 14 = reserved for future use
15 = not defined (default)

NOTE 8 Definition of values 1 to 15 provided by a competent regional authority. Value shall be set to zero (0), if not used for any regional application. Regional applications shall not use zero. A null field indicates that this is unchanged (ref. ITU-R M.1371, Message 1, Reserved for regional applications parameter).

6.6 IEC 61162-1, Ed. 2, sentences

ACK – Acknowledge alarm

Acknowledge device alarm. This sentence is used to acknowledge an alarm condition reported by a device.

```
$--ACK,xxx*hh<CR><LF>
```

Local alarm number (identifier) [identification number of alarm source]

ALR – Set alarm state

Local alarm condition and status. This sentence is used to report an alarm condition on a device and its current state of acknowledgement.

```
$--ALR,hhmmss.ss,xxx,A, A,c--c*hh<CR><LF>
```

Alarm's description text
Alarm's acknowledge state, A = acknowledged
V = unacknowledged
Alarm condition (A = threshold exceeded, V = not exceeded)
Local alarm number (identifier) [identification number of alarm source]
Time of alarm condition change, UTC

DTM - Datum reference

Local geodetic datum and datum offsets from a reference datum. This sentence is used to define the datum to which a position location, and geographic locations in subsequent sentences, are referenced. Latitude, longitude and altitude offsets from the reference datum, and the selection of the reference datum, are also provided.

Cautionary notes: The datum sentence should be transmitted immediately prior to every positional sentence (e.g. GLL, BWC, WPL) which is referenced to a datum other than WGS84, the datum recommended by IMO.

For all datums the DTM sentence should be transmitted prior to any datum change and periodically at intervals of not greater than 30 s.

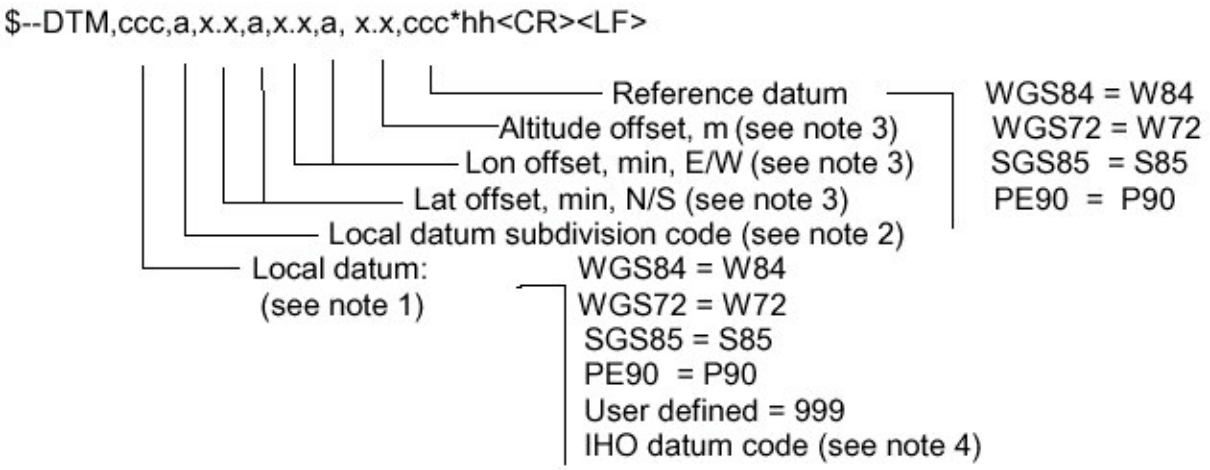

NOTE 1 Three character alpha code for local datum. If not one of the listed earth-centred datums, or 999 for user defined datums, use IHO datum code from International Hydrographic Organisation Publication S-60, Appendices B and C. Null field if unknown.

NOTE 2 One character subdivision datum code when available or user defined reference character for user defined datums, null field otherwise. Subdivision character from IHO Publication S-60, Appendices B and C.

NOTE 3 Latitude and longitude offsets are positive numbers, the altitude offset may be negative. Offsets change with position: position in the local datum is offset from the position in the reference datum in the directions indicated:

Plocal datum = Pref datum + offset

NOTE 4 Users should be aware that chart transformations based on IHO S60 parameters may result in significant positional errors when applied to chart data.

Only the local datum is required and used by the AIS.

GBS – GNSS satellite fault detection

This message is used for setting the RAIM flag in the position reports sent by the AIS.

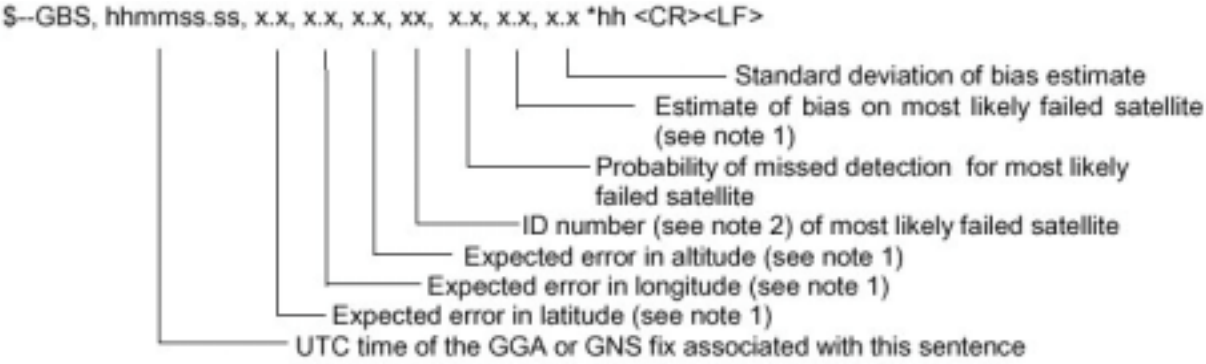

NOTE 1 Expected error in metres due to bias, with noise = 0.

NOTE 2 Satellite ID numbers. To avoid possible confusion caused by repetition of satellite ID numbers when using multiple satellite systems, the following convention has been adopted:

a) GPS satellites are identified by their PRN numbers, which range from 1 to 32.
b) The WAAS system has reserved numbers 33 – 64 to identify its satellites.
c) The numbers 65 – 96 are reserved for GLONASS satellites. GLONASS satellites are identified by 64+ satellite slot numbers. The slot numbers are 1 through 24 for the full GLONASS constellation of 24 satellites, thus giving a range of 65 through 88. The numbers 89 through 96 are available if slot numbers above 24 are allocated to on-orbit spares.

Only Expected error in latitude and Expected error in longitude is required and used by the AIS.

GGA – Global positioning system (GPS) fix data

Time, position and fix-related data for a GPS receiver.

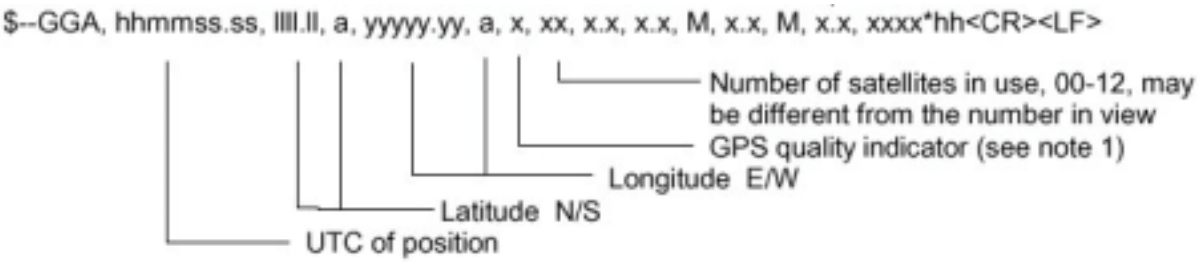

NOTE 1 GPS quality indicator:
0 = fix not available or invalid

1 = GPS SPS mode, fix valid
2 = differential GPS, SPS mode, fix valid
3 = GPS PPS mode, fix valid
4 = Real Time Kinematic. Satellite system used in RTK mode with fixed integers
5 = Float RTK. Satellite system used in RTK mode with floating integers
6 = Estimated (dead reckoning) mode
7 = Manual input mode
8 = Simulator mode
The GPS Quality Indicator shall not be a null field.

NOTE 2 Time in seconds since last SC104 type 1 or 9 update, null field when DGPS is not used.

NOTE 3 Geoidal separation: the difference between the WGS-84 earth ellipsoid surface and mean sea level (geoid) surface, " – " = mean sea level surface below the WGS-84 ellipsoid surface.

Utc of position, Latitude, Longitude and GPS quality is the only fields that are used by the AIS.

GLL – Geographic position – latitude/longitude

Latitude and longitude of vessel position, time of position fix and status.

NOTE 1 Positioning system Mode indicator:
A = Autonomous
D = Differential
E = Estimated (dead reckoning)
M = Manual input
S = Simulator
N = Data not valid

NOTE 2 The Mode Indicator field supplements the Status field (field 6). The Status field shall be set to V = invalid for all values of Operating Mode except for A = Autonomous and D = Differential. The positioning system Mode indicator and Status fields shall not be null fields.

All fields are used by the AIS.

GNS – GNSS fix data

Fix data for single or combined satellite navigation systems (GNSS). This sentence provides fix data for GPS, GLONASS, possible future satellite systems and systems combining these. This sentence could be used with the talker identification of GP for GPS, GL for GLONASS, GN for GNSS combined systems, as well as future identifiers. Some fields may be null fields for certain applications, as described below.

If a GNSS receiver is capable simultaneously of producing a position using combined satellite systems, as well as a position using only one of the satellite systems, then separate $GPGNS, $GLGNS, etc. messages may be used to report the data calculated from the individual systems.

If a GNSS receiver is set up to use more than one satellite system, but for some reason one or more of the systems are not available, then it may continue to report the positions using $GNGNS, and use the mode indicator to show which satellite systems are being used.

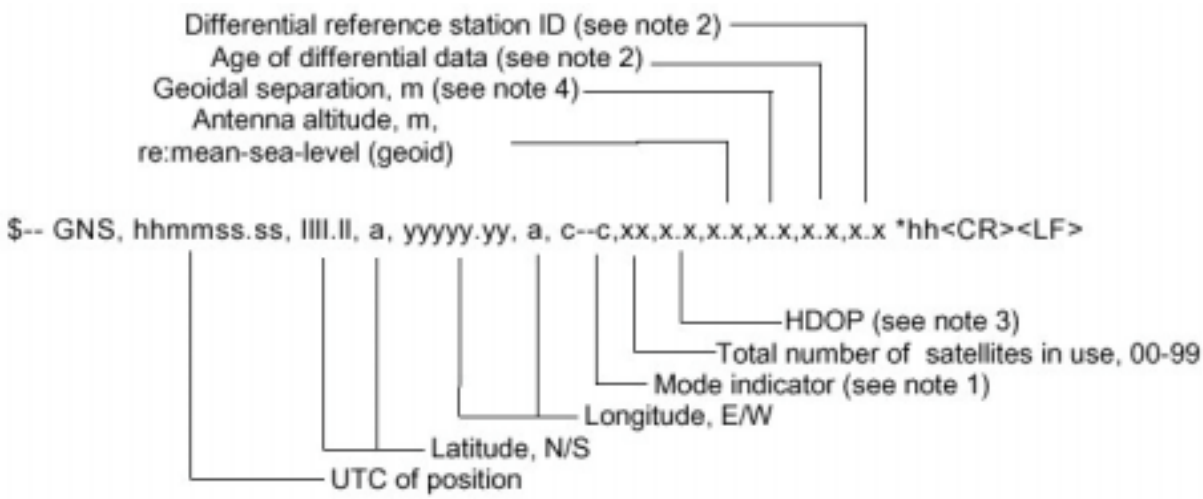

NOTE 1 Mode Indicator. A variable length valid character field type with the first two characters currently defined. The first character indicates the use of GPS satellites, the second character indicates the use of GLONASS satellites. If another satellite system is added to the standard, the mode indicator will be extended to three characters; new satellite systems shall always be added to the right, so the order of characters in the Mode Indicator is: GPS, GLONASS, other satellite systems.

The characters shall take one of the following values:
N = No fix. Satellite system not used in position fix, or fix not valid.
A = Autonomous.Satellite system used in non-differential mode in position fix.
D = Differential. Satellite system used in differential mode in position fix.

P = Precise. Satellite system used in precision mode. Precision mode is defined as: no deliberate degradation (such as Selective Availability), and higher resolution code (P-code) is used to compute position fix.
R = Real Time Kinematic. Satellite system used in RTK mode with fixed integers.
F = Float RTK. Satellite system used in real time kinematic mode with floating integers.
E = Estimated (dead reckoning) Mode.
M = Manual Input Mode.
S = Simulator Mode.
The Mode indicator shall not be a null field.

NOTE 2 Age of differential data and Differential reference station ID

a) When the talker is GN and more than one of the satellite systems are used in differential mode, then the "Age of differential data" and "Differential reference station ID" fields shall be null. In this case, the "Age of differential data" and "Differential reference station ID" fields shall be provided in following GNS messages with talker IDs of GP,GL, etc. These following GNS messages shall have the latitude, N/S, longitude, E/W, altitude, geoidal separation, mode and HDOP fields null. This indicates to the listener that the field is supporting a previous $GNGNS message with the same time tag. The "Number of satellites" field may be used in these following messages to denote the number of satellites used from that satellite system.

Example: A combined GPS/GLONASS receiver using only GPS differential corrections has the following GNS sentence sent:

$GNGNS,122310.2,3722.425671,N,12258.856215,W,DA,14,0.9,1005.543,6.5,5.2,23*59<CR><LF>

Example: A combined GPS/GLONASS receiver using both GPS differential corrections and GLONASS differential corrections may have the following three GNS sentences sent in a group:

$GNGNS,122310.2,3722.425671,N,12258.856215,W,DD,14,0.9,1005.543,6.5,,*74<CR><LF>

$GPGNS,122310.2, , , , , , 7, , , ,5.2,23*4D<CR><LF>

$GLGNS,122310.2, , , , , , 7, , , ,3.0,23*55<CR><LF>

The Differential Reference station ID may be the same or different for the different satellite systems

b) Age of Differential Data

For GPS differential data: This value is the average of the most recent differential corrections in use. When only RTCM SC104 Type 1 corrections are used, the age is that of the most recent Type 1 correction. When RTCM SC104 Type 9 corrections are used solely, or in combination with Type 1 corrections, the age is the average of the most recent corrections for the satellites used. Null field when Differential GPS is not used.

For GLONASS differential data: This value is the average age of the most recent differential corrections in use. When only RTCM SC104 Type 31 corrections are used, the age is that of the most recent Type 31 correction. When RTCM SC104 Type 34 corrections are used solely, or in combination with Type 31 corrections, the age is the average of the most recent corrections for the satellites used. Null field when differential GLONASS is not used.

NOTE 3 HDOP calculated using all the satellites (GPS, GLONASS and any future satellites) used in computing the solution reported in each GNS sentence.

NOTE 4 Geoidal separation is the difference between the earth ellipsoid surface and mean-sea-level (geoid) surface defined by the reference datum used in the position solution, "-" = mean-sea-level surface below ellipsoid surface. The reference datum may be specified in the DTM sentence.

UTC of position, Latitude, Longitude and Mode indicator, are the only fields used by the AIS.

HDT – Heading true

IMO Resolutions A.424 and A.821. Actual vessel heading in degrees true produced by any device or system producing true heading.

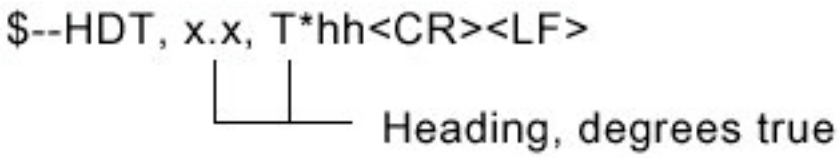

All fields are used by the AIS.

OSD Own ship data

IMO Resolution A.477 and MSC 64(67), Annex 1 and Annex 3. Heading, course, speed, set and drift summary. Useful for, but not limited to radar/ARPA applications. OSD gives the movement vector of the ship based on the sensors and parameters in use.

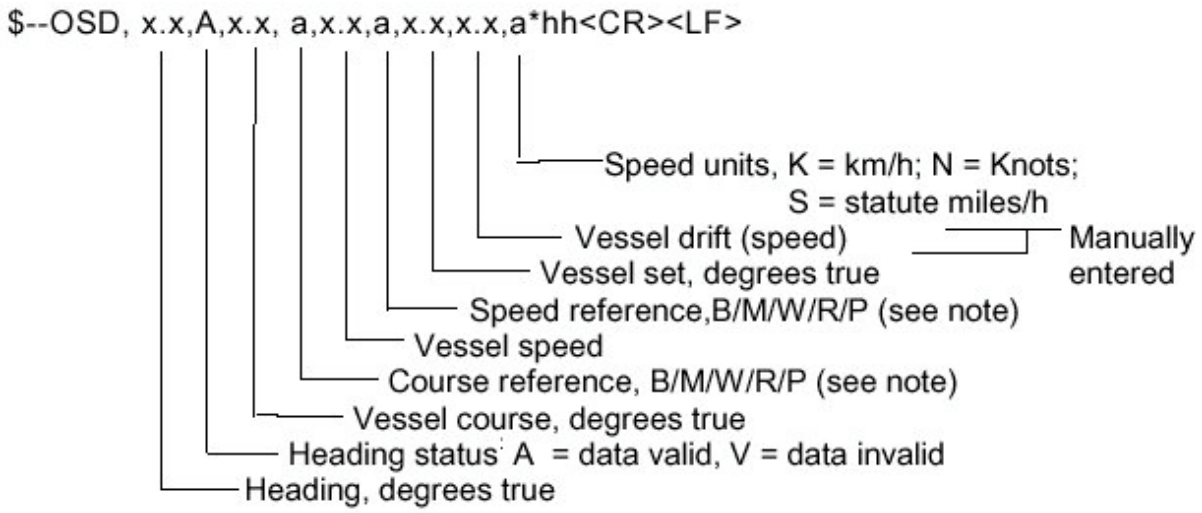

NOTE Reference systems on which the calculation of vessel course and speed is based. The values of course and speed are derived directly from the referenced system and do not additionally include the effects of data in the set and drift fields.

B = bottom tracking log
M = manually entered
W = water referenced
R = radar tracking (of fixed target)
P = positioning system ground reference.

Heading, Heading status, Vessel course, Vessel speed and Speed units, are used by the AIS.

RMC - Recommended minimum specific GNSS data

Time, date, position, course and speed data provided by a GNSS navigation receiver. This sentence is transmitted at intervals not exceeding 2 s and is always accompanied by RMB when a destination waypoint is active. RMC and RMB are the recommended minimum data to be provided by a GNSS receiver. All data fields must be provided null fields used only when data is temporarily unavailable.

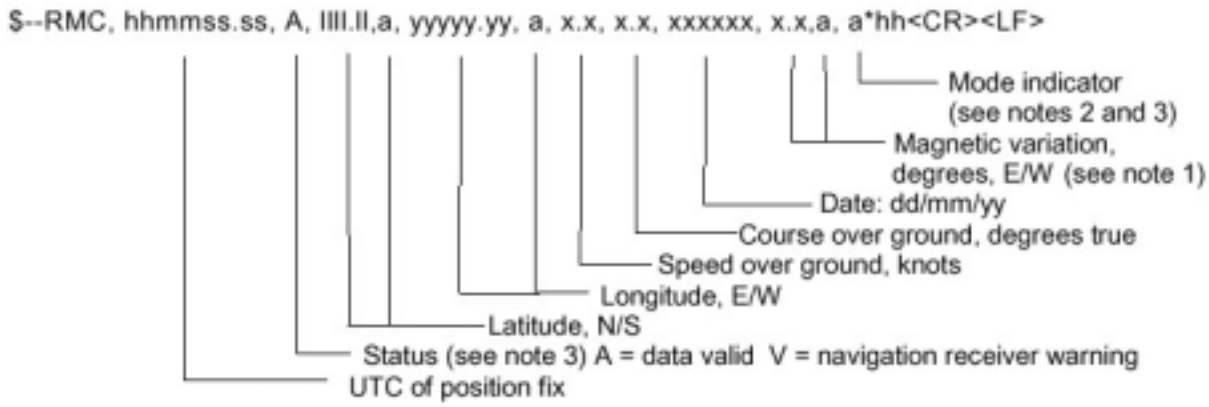

NOTE 1 Easterly variation (E) subtracts from true course. Westerly variation (W) adds to true course.

NOTE 2 Positioning system Mode indicator:
A = Autonomous mode
D = Differential mode
E = Estimated (dead reckoning) mode
M = Manual input mode
S = Simulator mode
N = Data not valid

NOTE 3 The positioning system Mode indicator field supplements the positioning system Status field (field No. 2) which shall be set to V = invalid for all values of Mode indicator except for A = Autonomous and D = Differential. The positioning system Mode indicator and Status fields shall not be null fields.

All fields, except Magnetic variation is used by the AIS.

ROT – Rate of turn

IMO Resolution A.526. Rate of turn and direction of turn.

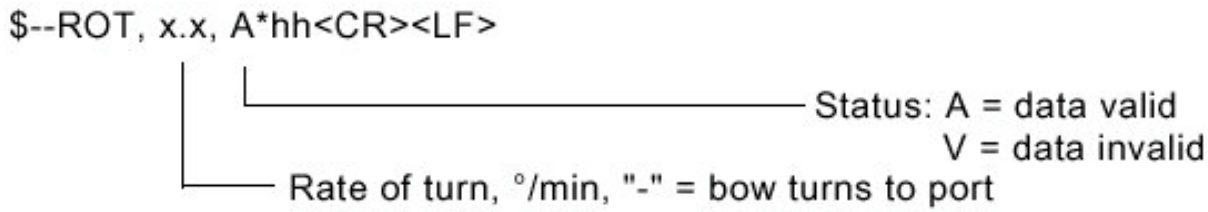

All fields are used by the AIS.

TXT – Text transmission

For the transmission of short text messages. Longer text messages may be transmitted by using multiple sentences.

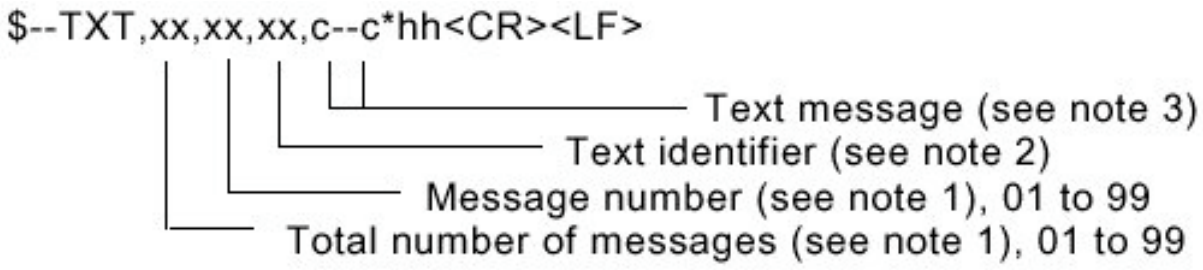

NOTE 1 Text messages may consist of the transmission of multiple messages all containing identical field formats. The first field specifies the total number of messages, minimum value = 1. The second field identifies the order of this message (message number), minimum value = 1. For efficiency, it is recommended that null fields be used in the additional sentences, otherwise data is unchanged from the first sentence.

NOTE 2 The text identifier is a number, 01 to 99, used to identify different text messages.

NOTE 3 ASCII characters, and code delimiters if needed, up to the maximum permitted sentence length (i.e. up to 61 characters including any code delimiters).

All fields are used by the AIS.

VBW – Dual ground / water speed

Water-referenced and ground-referenced speed data.

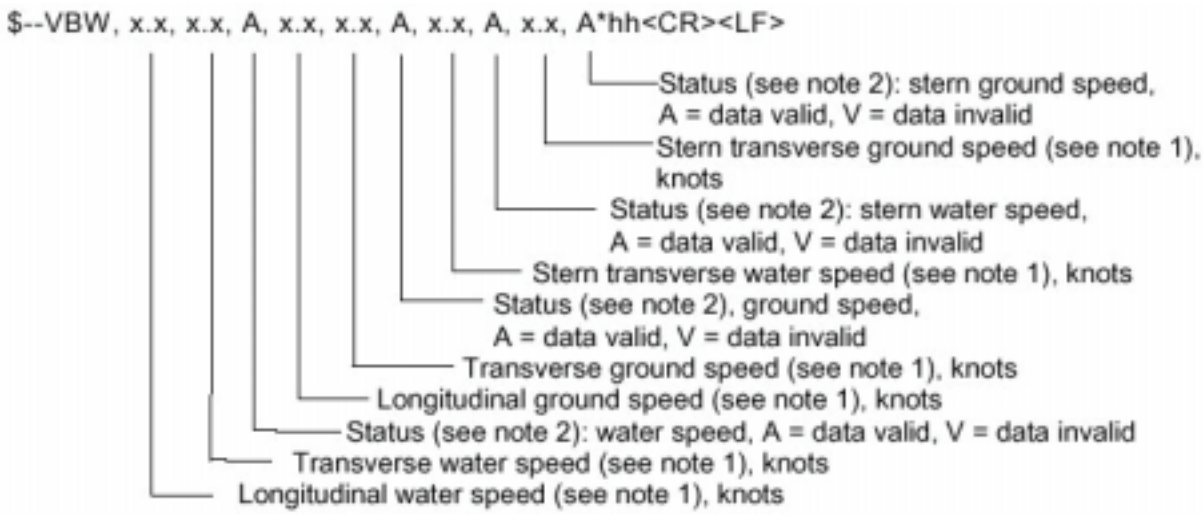

NOTE 1 Transverse speed: "-" = port, Longitudinal speed: "-" = astern.

NOTE 2 The status field shall not be a null field.
All fields are used by the AIS except Stern speed.

VTG – Course over ground and ground speed

The actual course and speed relative to the ground.

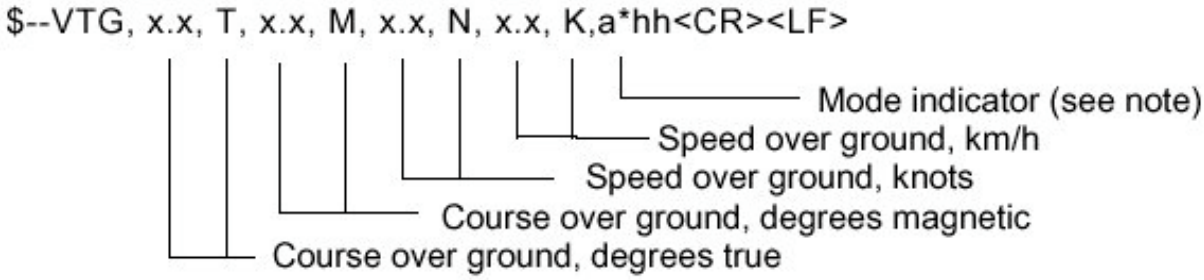

NOTE Positioning system Mode indicator:
A = Autonomous mode
D = Differential mode
E = Estimated (dead reckoning) mode
M = Manual input mode
S = Simulator mode
N = Data not valid
The positioning system Mode indicator field shall not be a null field.

Course over ground, degrees magnetic and Speed over ground km/h are not used by the 'AIS

ZDA – Time and date

UTC, day, month, year and local time zone.

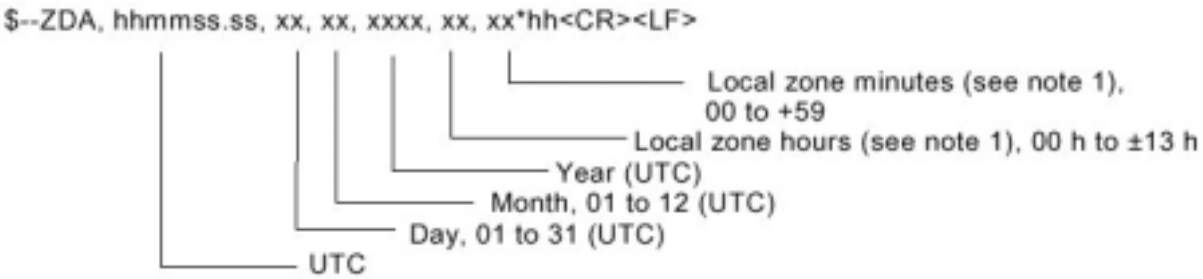

NOTE 1 Local time zone is the magnitude of hours plus the magnitude of minutes added, with the sign of local zone hours, to local time to obtain UTC. Local zone is generally negative for East longitudes with local exceptions near the International Date Line.

Example: At Chatham Is. (New Zealand) at 1230 (noon) local time on June 10, 1995:
$GPZDA,234500,09,06,1995,-12,45*6C<CR><LF>

In the Cook Islands at 1500 local time on June 10, 1995:
$GPZDA,013000,11,06,1995,10,30*4A<CR><LF>

All fields except Local zone, are used by the AIS.

6.7 Proprietary 61162-1 sentences

General

In order to configure and service the AIS mobile station there are some proprietary messages that can be used. The AIS mobile station uses the NMEA registered "**STX**" manufacturer's code. When setting parameters in the AIS mobile station use the **$PSTXS** command. To query the AIS mobile station for information, use the **$PSTXQ** command. Responses from the AIS mobile station uses the **$PSTXR** command. The proprietary messages comply with IEC 61162-1 and have the following structure:

$	P	STX	S	,	<Msg ID>	DATA	*	<FCS>	<CR>	<LF>

Field	Definition
$ or !	Hex 24 or Hex 21 - Start of sentence
P	Hex 50 – Proprietary sentence ID
STX	Kongsberg Seatex mnemonic code
S or R or Q	S = Set, R = Response, Q = Query
<Msg ID>	Message ID identifying a specific sentence
DATA	Data portion, unique for each Message ID.
*	Checksum delimiter
<FCS>	Checksum
<CR><LF>	End of message

MSI number

To request the current MMSI number from the AIS mobile station, use the command:

$PSTXQ,MMSI<FCS><CR><LF>*

The AIS mobile station response message has the format:

$PSTXR,MMSI,<nnnn><FCS><CR><LF>*

To set or change the MMSI number, use the command:

$PSTXS,MMSI,<nnnn>*<FCS><CR><LF>

Field	Description	Range
MMSI	Message ID identifying this sentence	NA
<nnnn>	MMSI number	0 to 1073741823

All fields are required and used.

IMO number

To request the current IMO number from the AIS mobile station, use the command:

$PSTXQ,IMO<FCS><CR><LF>*

The AIS mobile station response message has the format:

$PSTXR,IMO,<nnnn><FCS><CR><LF>*

To set or change the IMO number, use the command:

$PSTXS,IMO,<nnnn><FCS><CR><LF>*

Field	Description	Range
IMO	Message ID identifying this sentence	NA
<nnnn>	IMO number	0 to 1073741823

All fields are required and used.

Serial port communication parameters

To request the current communication parameters of the serial ports, and to retrieve all available serial ports, use the command:

$PSTXQ,PORT<FCS><CR><LF>*

The AIS mobile station response message has the format (one message per port):

$PSTXR,PORT,CCCC,<bbbb>,<p>,<d>,<s><FCS><CR><LF>*

To set or change the communication parameters, use the command:

$PSTXS,PORT,CCCC,<bbbb>,<p>,<d>,<s><FCS><CR><LF>*

Field	Description	Range
PORT	Message ID identifying this sentence	NA
CCCC	Name of serial port	COM1 to COM32
<bbbb>	Baud rate	1200 to 38400
<p>	Parity, 'N' = None, 'E' = Even, 'O' = Odd	'N', 'E', 'O'
<d>	Data bits	5-8
<s>	Stop bits	1, 2

All fields are required and used.

Blank page

7 SOFTWARE SETUP PROCEDURE

7.1 Description of installation setup

The AIS 100 mobile station is set up with factory settings during testing. The installation setup must be performed as a part of the AIS 100 system installation.

The installation setup is found in the highlighted sub-menus (4, 7, 9 & c) in the **Main Menu.**

```
=== Main Menu ======== P1
1.    Nav.Status
2.    Long Range history
3.    Voyage Data
4.    Static Data
5.    Dynamic Data
6.    Chn.Management
7.    VHF Link
8.    Downperiods
9.    Network & Ports
a.    Answer Mode
b.    Diagnostics
c.    Security
x.yy.zz
```

This is the **Main Menu** page for the Seatex AIS 100 with sub-menus. Press the MENU button on the MKD unit to access the sub-menus.
In order to make changes to any data field, use the WHEEL to select desired line and confirm with the ENTER button. Edit the data field by selecting the symbol (arrow with bar) and (enter) in the end of the bottom line. Type new data entry and confirm with ENTER.

```
=== Security ======== P1C
   Authorisation

L1 PIN Code         :*******
L2 PIN Code         :*******
Nav.Status          :1
Route Plan          :2
Voyage Data         :0
Static Data         :0
Chn.Mgmt            :1
VHF Link            :1
Serial Ports        :0
Netw.Settings       :1
Answer Mode         :0
```

Security
A default authorisation code is used for altering the data fields in the **authorisation** page. The level 1 and 2 PIN codes control access to the listed sub-groups. The lower level (0) gives limited access and needs no access code. The higher level (2) gives unrestricted access to all of the AIS 100 mobile station parameters.

All entries on this page are protected by level 2 PIN code.

<u>Setup procedure:</u>
Enter new PIN codes and choose suitable access levels for the group data.

The Default PIN code 1 & 2 and a Master Password can be handled out from Kongsberg Seatex Custom Support.

Static Data is divided into three groups.

```
=== Static Data ===== P14
  Own Ship            1/3

Name     :ANNE BERIT
Call     :TA164GH
Mmsi     :14395769235
Imo      :10978974453
Type     :51
Keel     :12
```

Static Data Own Ship is used for entering the vessel's own static data, i.e. ship data that does not change from one voyage to another

The parameters necessary to customise are:

Setup procedure:
Name: The vessel name.
Call: The vessel call sign.
MMSI: The Maritime Mobile Signal Identifier number.
IMO: The vessel IMO number.
Type: Type of vessel.
Keel: Height over keel. Total height of vessel in metres.

```
=== Static Data ===== P14
  AIS Transceiver      2/3

Length A:30
Length B:10
Length C:7
Length D:7

   ========================
        1234567890*< >
```

Static Data Internal GPS antenna. It is necessary to specify the exact position of the AIS 100's internal GPS antenna. No vertical measurements are used.

Setup procedure:
Enter: A, B, C & D.

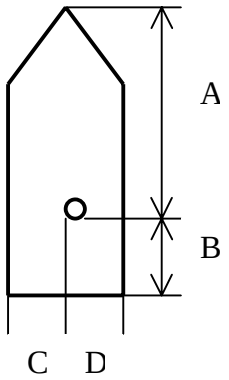

```
=== Static Data ===== P14
  AIS Transceiver      2/3

Length A:30
Length B:10
Length C:7
Length D:7



   ========================
        1234567890*< >
```

Static Data External GPS/GNSS Antenna. If the vessel's own GPS/GNSS antenna is used as input to the AIS 100 mobile station, the same parameters are necessary. No vertical measurements are used.

Setup procedure:
Enter: A, B, C & D.

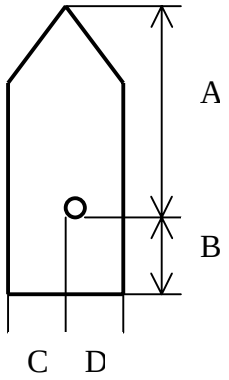


```
=== VHF Link ======== P17
  Ais Transceiver

ChnA              :2087
ChnB              :2088
TxPower           :HIGH
BW A              :Default
BW B              :Default
Transmitter       :TxON
```

VHF link. The AIS 100 Mobile station transmitting power is normally set to High. The channel management is normally atomised via base stations, so the channel selection ChnA, ChnB and the bandwidth BW A and BW B, shall not be altered.

The **VHF link** page describes the current VHF settings.

Setup procedure, check that:

ChnA=2087, ChnB=2088
BW A=Default, BW B=Default

TxPower is set to High.
High=12W, Low=2W

Transmitter=TxON

```
=== Serial Ports === P191
  External ports

PILOT          :38400
PI             :38400
LongRange      :4800
RTCM           :4800
SENSOR-1       :4800
SENSOR-2       :4800
SENSOR-3       :4800
```

Network & Ports. The serial port baud rate must be set up according to external instrumentation.

The **Serial Ports** page displays the baud rate for all serial ports. The sensor interfaces comply with the NMEA 183.

Setup procedure:
Change the baud rates accordingly.

```
=== Netw.Settings == P192
  External ports

IP-adr      :10.0.21.53
SubNet      :256.256.256.256
Gateway     :10.0.21.1
MAC MS      :000.005.190
MAC LS      :000.000.244
```

Local Area Network. A network administrator will provide the appropriate settings.

The **Network** page displays the network settings.

Setup procedure:
Change the network setting accordingly.

MAC xx: the processing cards MAC address.

Note!
If a local PC is used outside a network server, use a crossed UTP cable to connect LAN. Set up the PC accordingly.

8 MAINTENANCE

8.1 General

The Seatex AIS 100 consists of both software and hardware. The software part can be reinstalled or upgraded to the latest version in the field by running a software installation procedure. Service of the Seatex AIS 100 hardware in the field can consist of:

- Exchange of damaged GPS or VHF antenna cables.
- Exchange of failed GPS or VHF antennas.
- Exchange of failed Seatex AIS 100 mobile station .

The Seatex AIS 100 requires a skilled technician to maintain most of the hardware service.

8.2 Periodic maintenance

The AIS 100 should regularly be checked for firm and fixed mounting of the chassis in order to avoid vibration and shock. All connectors should be checked for good mechanical and electrical connections. Cables should not be bent more than the minimum recommended bending radius and there should be no sharp bends on coaxial cables. All cables should be fixed tight and rigid to their supporting structure (bulkhead, mast etc.) and special care should be taken where cables run through holes with sharp edges.

A properly operating unit will show when it is transmitting and receiving messages by short blinks on the TX and MSG LEDs. Inspecting the LEDs for normal operation gives a good indication of the operating status. In particular, there should be no red LEDs, because red indicates alarms or severe faults. Any red LED indication means that further investigation and servicing is necessary.

8.3 Repairs and modifications

Repair of the Seatex AIS 100 consists of exchange of damaged antenna cables, exchange of GPS or VHF antenna and replacement of the Seatex AIS 100 mobile station, connection box or MKD. Any skilled electrician should be able to do this.

8.3.1 Exchange of antenna cable

1. Disconnect the power cable from the Seatex AIS 100.
2. Dismount the damaged antenna cable. The new antenna cable must be as straight as possible. Do not crush or crimp the cable, as this will affect the electrical properties of the cable.
3. Connect the antenna cable to the antenna.
4. The connection between the antenna and the antenna cable should be sealed against water penetration, preferably by using waterproof self-vulcanising tape or shrink stocking with glue.
5. Connect the antenna cable to the Seatex AIS 100 unit and reapply power by connecting the power cable.

Caution! ***If the antenna cable is attached to the unit, do not attach the antenna cable to the antenna with the Seatex AIS 100 powered on. If the antenna cable is short-circuited with power on, the GPS receiver within the unit can be damaged.***

8.3.2 Exchange of GPS or VHF antennas

1. Disconnect the power cable from the Seatex AIS 100 .
2. Dismount the failed antenna.
3. Mount the new antenna on the antenna rod.
4. Connect the antenna cable to the antenna.
5. The connection between the antenna and the cable should be sealed against water penetration, preferably by using waterproof self-vulcanising tape.
6. Connect the antenna cable to the Seatex AIS 100 .

Caution! ***If the antenna cable is attached to the unit, do not attach the antenna cable to the new antenna with the AIS 100 unit powered on. If the antenna cable is short-circuited with power on, the GPS receiver within the unit can be damaged.***

8.3.3 Repair of the Seatex AIS 100

The Seatex AIS 100 is not designed for customer repair. All repairs and modifications of the unit, except installation of new software versions and setup of the system, should be carried out by Seatex qualified personnel. A failed unit should be shipped back to Seatex for repair.

8.4 Installation of a spare Seatex AIS 100

1. Disconnect the power cable from the AIS 100.
2. Disconnect the unit to be repaired from its cables and the rack, and replace it with the spare unit.
3. Connect all cables as they were on the original unit.
4. Connect the power cable.
5. Configure the new unit as described in chapter 7.

Blank page

9 TROUBLESHOOTING

If the initialisation process fails, the alarm LED will turn red. Mobile station failure can be divided into two categories:

- Hardware problems
- External interface problems

9.1 Hardware problems

Hardware problems can be divided into the following categories:

- Power supply failing
- GPS receiver failing
- VHF transceiver failing
- GPS and VHF antennas and cables
- Interface cables

9.1.1 Power supply failing

If the lamp PWR on the front of the mobile station does not light green, the unit does not receive power. First check the fuse in the connection box. If the fuse is OK, check that external power has been connected to terminal screws 37 to 40 in the AIS 100 connection box as stated in section 5.4 and that the supplied power is in accordance with technical power specifications, section 4.3. If the transponder outputs an alarm, the alarm condition can be read from the display.

9.1.2 GPS and VHF antenna cable connections

Typical problems when no GPS signal is received is that the GPS antenna cable and/or connectors are damaged as well as loose or that the cables are not properly connected. In order to check for antenna cable problems, ensure that the GPS antenna is disconnected. The Ohm reading between the centre and the shelf should be infinite if there is no short-circuit in the cable. Make a short-circuit in the opposite end of the cable and measure the resistance. Now the reading should be approximately 0 Ohm.

9.1.3 GPS and VHF antenna malfunction

Disconnect the GPS antenna cable at the rear side of the mobile station. Measure the resistance between the centre pin and shield in the cable (with the antenna connected). The GPS antenna does not have a defined resistance that can be measured. Therefore, before measurements can be carried out, the antenna end of the cable needs

to be short-circuited. Measure between centre conductor and shield. Resistance should be close to 0 Ohm.

Note! *Switch off the power before disconnecting the antenna.*

9.1.4 GPS receiver failing

If the mobile station does not compute position data and the GPS lamp on the front of the mobile station does not light green, the GPS PPS pulse is not being received and the GPS receiver inside the mobile station should be checked. Disconnect the antenna cable at the rear side of the hardware unit. The voltage output on the GPS antenna connector should be approximately 4.8 – 5.0 V and indicates that the GPS receiver supplies voltage to the antenna. If not, this indicates problems with the GPS receiver. Disconnect and connect power (a few times) and see if the mobile station starts up as normal. If not, consult Seatex for advice.

9.1.5 VHF transceiver failing

If the VHF antenna and antenna cabling is OK and the MSG lamp on the front of the mobile station does not light green and amber vice versa, this indicates incorrect data reception on AIS channel 1 and 2. Disconnect and connect power (a few times) and see if the mobile station starts up as expected. If not, consult Seatex for advice.

9.2 External data interface problems

External data connections may be incorrect:

- Data input from main GPS source
- Heading from vessel heading sensor

9.2.1 Data input from main GPS/GNSS source

Position data output from the AIS mobile station is generated from the vessel main GPS/GNSS receiver and received into the AIS unit using serial line communication. If data is missing into the AIS mobile station, the following steps should be taken in order to check for missing position data:

- Check that cable connections are correctly terminated in the connection box (terminal screws 19 to 27).
- If properly connected, check the serial line communication (baud rate, parity, number of bytes transmitted, number of stop bits)

between transmitting (vessel GPS/GNSS receiver) and receiving (parameters to be checked from the MKD unit) end.

- If OK, check that the position output format from the GPS/GNSS receiver is in accordance with the expected input position format.
- If the mobile station still does not receive position data, consult Seatex for advice.

9.2.2 Heading from vessel heading sensor

Heading data is received from the vessel gyro or magnetic compass. If input data is missing, the following steps should be taken in order to check for missing heading data:

- Check that cable connections are correctly terminated in the connection box (terminal screws 19 to 27).
- If correctly connected, check the serial line communication (baud rate, parity, number of bytes transmitted, number of stop bits) between transmitting (vessel heading sensor) and receiving (parameters to be checked from the MKD unit) end.
- If OK, check that the heading output format from the compass is in accordance with the expected input heading format.
- If the mobile station still does not receive heading data, consult Seatex for advice.

If the mobile station fails to operate properly, remove power by removing the + 24 V power supply cable and then reapply power. The mobile station should now initialise from start.

Blank page

10 PARTS LIST

The standard Seatex AIS 100 consists of:

Part No	No	Description
A120-01		This package consists of a complete Seatex AIS 100, with all necessary parts except for antenna brackets and power cable. GPS and VHF antenna cables have to be ordered separately. The transponder is supplied for table mounting. The MKD is delivered for console mounting. The package consists of the following items:
	A100-50	Seatex AIS 100 mobile station
	A100-51	Seatex AIS 100 MKD (Minimum Keyboard Display)
	A100-54	Seatex AIS 100 connection box including 3 m interface cable
	A100-56	GPS antenna
	A100-61	Connector kit for GPS antenna cable (RG214), two connectors
	A100-81	Adapter cable set for GPS antenna cable, two cables length 0,5 m
	A100-57	VHF antenna
	A100-66	Connector kit for VHF antenna cable (RG214), two connectors
	A100-65	GPS antenna mounting rod, 0,5 m
	A100-76	Interface cable to MKD 100, length 7 m, connectors mounted
	A100-82	Manual set for Seatex AIS 100

Blank page

Appendix A – Vessel types

Identifiers to be used by ships to report their type			
Identifier No.	**Special craft**		
50	Pilot vessel		
51	Search and rescue vessels		
52	Tugs		
53	Port tenders		
54	Vessels with anti-pollution facilities or equipment		
55	Law enforcement vessels		
56	Spare – for assignments to local vessels		
57	Spare – for assignments to local vessels		
58	Medical transports (as defined in the 1949 Genova Conventions and Additional Protocols)		
59	Shops according to RR Resolution No. 18 (Mob-83)		
Other Ships			
First digit[1)]	**Second digit[1)]**	**First digit[1)]**	**Second digit[1)]**
1 – reserved for future use	0– All ships of this type	-	0 – Fishing
2 – WIG	1 – Carrying DG, HS or MP, IMO hazard or pollutant category A	-	1 – Towing
3 – see right column	2 – Carrying DG, HS, or MP, IMO hazard or pollutant category B	3– Vessel	2 – Towing and length of the tow exceeds 200 m or breadth exceeds 25 m
4 – HSC	3 – Carrying DG, HS, or MP, IMO hazard or pollutant category C	-	3 – Engaged in dredging or underwater operations
5 – See above	4 – Carrying DG, HS, or MP, IMO hazard or pollutant category D	-	4 – Engaged in diving operations
	5 – Reserved for future use	-	5 – Engaged in military operations

[1] The identifier should be constructed by selecting the appropriate first and second digits

Identifiers to be used by ships to report their type			
Other ships			
First digit	Second digit	First digit	Second digit
6 – Passenger ships	6 – Reserved for future use	-	6 – Sailing
7 – Cargo ships	7 – Reserved for future use	-	7 – Pleasure craft
8 – Tanker(s)	8 – Reserved for future use	-	8 – Reserved for future use
9 - Other types of ship	9 – No additional information	-	9 – Reserved for future use

DG: dangerous goods
HS: harmful substances
MP: marine pollutants

Appendix B – Declaration of Conformity

KONGSBERG

DECLARATION OF CONFORMITY

(according to ISO/IEC Guide 22 and EN 45014)

Manufacturer's Name: **Kongsberg Seatex AS**
Manufacturer's Address: **Pirsenteret, 7462 Trondheim, Norway**

declares that the product

Product Name:	**AIS 100**
Product Items/Part Numbers:	**- AIS Transponder Unit AIS 100, part A100-50** **- Connection Box, part A100-54** **- Keyboard and display unit AIS 100 MKD, part A100-51** **- VHF antenna, part A100-57** **- GPS antenna Trimble PN-41555-00, part A100-56, or** **- GPS antenna AT575-75, part G060-02,**

conforms with the navigation equipment requirements of **Marine Equipment Directive (MED) 96/98/EC as modified by directive 2002/75/EC (Annex A1, 4.32) and with reference to the following Product Standards**

IMO MSC.74(69) Annex 3	IEC 61993-2 (2002)
ITU-R M.1371-1 (Class A)	IEC 61162-1 (2002), IEC 61162-2 (1998)
IALA technical Clarifications of Rec. ITU-R M1371-1 (Edition 1.3)	IEC 60945 (1996)
ITU-R M.825-3	IEC 61108-1 (1996)
ITU-R M.1084-3	

Certificate references:
- EC type examination module B: Certificate No.: 734.2/0047-2/2003
- EC quality system certificate module D: Registration no.: BSH-014-03-2003

Issued by:
Bundesamt für Seeschifffart und Hydrographie (BSH, notified body identification number 0735)
Address: Bernhard-Nocht-Str. 78, 20359 Hamburg, Germany

Supplementary Information
All the technical documents are held by Kongsberg Seatex AS.

Date and Signature
2003-03-14

Gard Ueland, Vice President R&D

Blank page

Index

A

ABK · 2
ABM · 2
ACA · 2
Add Regions · 18
AIS · 1, 2
AIS frequencies · 7, 17
AIS message type · 9
AIS mobile station · 3, 5, 6, 8, 13, 15, 33, 34, 45, 81, 82, 94
AIS transceiver entry · 15
Alarm · 26
ALM LED · 46
ALR · 2
Answer mode · 19
antenna cable length · 44, 45
antenna cabling · 45, 94
assigned mode · 9
attenuation · 43, 44, 45
authorisation · 21, 85
autonomous · 9, 73, 74, 78, 80

B

BIIT · 2
brightness · 26
Broadcast messages · 23, 25
BS · 2
built-in alarm · 46

C

Channel Management · 17, 56, 57
Clear message · 25
climatic conditions · 27
COG · 2
connection box · 8, 10, 29, 33, 34, 35, 37, 38, 41, 89
connector data/power · 40
connectors · 37
contrast · 26

D

Data reporting · 5
data/power connector · 40
datum · 70
DGPS · 2
Diagnostics · 13, 20, 85
differential corrections · 7, 46, 75, 76
differential data · 76
Downperiods · 13, 18, 85
DSC · 2
Dynamic data · 16

E

ECDIS · 2
ECS · 2
Edit Current Region · 17
electromagnetic compatibility · 27
EMC · 2
EN60945 · 27
EN60950 · 27
ETA · 2, 5, 14, 61

F

factory settings · 85
FATDMA · 2

G

GLONASS · 72, 74, 75, 76
GNSS · 2
GPS · 2
GPS antenna · 8, 31, 33, 36, 37, 44, 45, 86, 93, 94
GPS antenna installation · 44
GPS antenna offset · 45
GPS/GNSS · 16, 34, 87, 94, 95

H

handled long range (lr) · 14
hardware · 89, 94
HDG · 2
heading data · 95
high speed serial data · 41

I

IALA · 2
IEC · 2
IMO · 2, 5, 14, 15, 34, 48, 61, 70, 76, 78, 82, 86, 99
IMO number · 5, 15, 48, 61, 82, 86
Inbox · 22, 23, 25
input sentences · 48, 49, 50
installation · 33
Installation
  Set-up · 85
interface – Long Range · 49
interface – presentation · 47, 48
internal alarm · 46
internal interface · 36
ITU-R M.1371 · 51, 52, 53, 54, 55, 56, 58, 59, 64, 65, 66, 67, 68, 69, 70

L

LAN · 2
LED · 2
LED indicators · 7
listener · 2, 8, 41
Local area network · 2, 19, 88
Long Range · 2, 11, 13, 19, 26, 49, 61, 85
long range (lr) · 13, 14
Long Range interface · 49
Long Range messages · 26
LR · 2

M

main GPS/GNSS receiver · 94
Main menu · 11, 13, 85
maintenance · 1, 89
malfunction · 10
message Clear · 25
message Long Range · 26
messages Broadcast · 23, 25
messages Predefined · 25
messages Safety related · 25
MKD · 2
MKD unit · 7, 11, 13, 27, 33, 34, 37, 85, 95
MMSI · 2, 5, 15, 22, 48, 51, 52, 54, 57, 60, 62, 63, 64, 81, 82, 86
mobile station · 7, 8, 31, 33, 35, 36, 37, 90, 93, 94
mobile station · 89
MSG · 2
MSI number · 81

N

N/A · 2
Nav Status · 13
network · 2, 8, 13, 19, 85, 88
Network · 2, 8, 13, 19, 85, 88
Network and ports · 19
NMEA · 2
NMEA 0183 · 6, 19

O

Outbox · 22, 23, 24, 25

P

PI · 2
pin layout data/power connector · 40
polled · 9, 10
polled mode · 10
Port configuration · 47, 49
PPS · 2
Predefined messages · 25
presentation interface · 47, 48
product safety · 27
PWR · 2

R

range · 4, 8, 13, 22, 28, 29, 42, 49, 54, 64, 69, 72
Rate of Turn · 2, 51
Real Time Kinematic · 73, 75
ROT · 2
RS · 3
RTCM · 2

S

Safety related messages · 25
screw terminals · 38
Security · 21
serial interface · 20
Serial ports · 19
setup · 21, 85, 90
shielded twisted pair · 41
SMS · 22
SOG · 3
SOTDMA · 3, 4
Static Data · 5, 13, 15, 16, 21, 65, 68, 85, 86, 87
static data field · 15
static data GPS · 16
Static Data Internal GPS antenna · 86
Static Data Own Ship · 86
SWR · 3

T

talker · 8, 41, 66
TBD · 3
TDMA · 3
third wire · 41
twisted pair - shielded · 41
TX · 3
TXT · 3

U

unpacking and handling · 33
UTC · 3

V

VDL · 3
VDM · 3
VDO · 3
VHF · 3
VHF antenna · 8, 30, 33, 36, 37, 42, 43, 44, 46, 89, 90, 93, 94
VHF communication · 3, 8
VHF coverage · 4
VHF link · 18, 87
VHF receiver · 7, 54
VHF signals · 42
vibration · 27, 89
View · 11, 22
View Regions · 17

Voyage Data · 13, 14, 21, 85
VTS · 3

W

warranty · 27

Z

Zone · 17, 18