Report No. 274308-1

Test Report

Product	AIS-300
Name and address of the applicant	Kongsberg Seatex, Pirsenteret NO-7462 Trondheim, Norway
Name and address of the manufacturer	Kongsberg Seatex, Pirsenteret NO-7462 Trondheim, Norway
Model	AIS-300
Rating	12-24 VDC
Trademark	AIS-300
Serial number	AIS300-141020
Additional information	-
Tested according to	**Parts of:** **IEC61993-2: 2012-10, ed 2.0 Ch 15 Physical radio tests** Maritime navigation and radiocommunication equipment and systems - Automatic identification system (AIS) -Part 2: Class A shipborne equipment of the automatic identification system (AIS) Operational and performance requirements, methods of test and required test results
Order number	274308
Tested in period	2014-11-25 – 2014-11-26; 2015-03-04;2016-11-23
Issue date	2016-11-23
Name and address of the testing laboratory	Nemko Instituttveien 6 Kjeller, Norway TEL: (+47) 22 96 03 30 FAX: (+47) 22 96 05 50
	Prepared by [Jan G Eriksen] / Approved by [G.Suhanthakumar]

CONTENTS

1 GENERAL INFORMATION 3
1.1 Revision history 3
2 TEST INFORMATION 3
2.1 Tested Item 3
2.2 Test Environment 4
2.3 Test Period 4
2.4 Test Engineers 4
2.5 Test Equipment 4
2.6 Other Comments 4
3 TEST REPORT SUMMARY 5
3.1 General 5
3.2 Test Summary 6
4 TEST RESULTS 7
4.1 Frequency Error Clause 15.1.1 7
4.2 Carrier Power Clause 15.1.2 9
4.3 Modulation Accuracy Clause 15.1.4 10
4.4 Sensitivity Clause 15.2.1 11
4.5 Error behaviour at high input signal level Clause 15.2.2 12
4.6 Co-channel rejection Clause 15.2.3 13
4.7 Adjacent-channel selectivity Clause 15.2.4 14
4.8 Spurious response rejection Clause 15.2.5 15
4.9 Intermodulation response rejection and blocking Clause 15.2.6 16
4.10 Spurious emissions from the receiver Clause 15.3.2 17
4.11 Maximum sensitivity Clause D.2.1 18
4.12 Error behaviour at high input signal level Clause D.2.2 19
4.13 Co-Channel rejection Clause D.2.3 20
4.14 Adjacent channel selectivity Clause D.2.4 21
4.15 Spurious response rejection Clause D.2.5 22
4.16 Intermodulation response rejection Clause D.2.6 23
4.17 Blocking or desensitisation Clause D.2.7 24
4.18 Spurious emissions from the receiver Clause D.2.8 25
5 MEASUREMENT UNCERTAINTY 26
6 PHOTOGRAPHS OF THE EUT 27
7 TEST EQUIPMENT USED 30
8 ANNEX 1 – MEASUREMENT PLOTS 31
8.1 Receiver Spurious emissions 31

1 GENERAL INFORMATION

1.1 Revision history

Revision #	Date	Order #	Description
00	2014-02-11	253637	First issued
01	2014-11-26	253637	Corrections
02	2016-11-26	253637	Added frequency error checks for extreme temperatures

2 Test Information

2.1 Tested Item

Name :	AIS-300
Model/version :	AIS-300
Serial number :	AIS300-141020
Hardware identity and/or version:	P/N A300-01
Software identity and/or version :	FPGA-driver v0.4.4 Ais_algo v0.4.7
Frequency Range :	156 – 163 MHz
Tunable Bands :	/
Number of Channels :	2 (156.025MHz and 162.025MHz), DSC (156.525 MHz)
Operating Modes :	Transceiver
Type of Modulation :	GMSK/FSK
Emissions Designator :	/
User Frequency Adjustment :	None
Rated Output Power :	100mW, 1W & 12.5W
Type of Power Supply :	12-24 VDC
Antenna Connector :	Yes
Antenna Diversity Supported :	/
Desktop Charger :	/

Description of Tested Device(s)

AIS terminal.

2.2 Test Environment

2.2.1 Normal test condition

Temperature:	20.8 – 21.9 °C
Relative humidity:	29.3 – 43 %
Normal test voltage:	18 VDC and 24 VDC

The values are the limit registered during the test period.

2.2.2 Extreme test conditions

The EUT has been tested under the following extreme test conditions:

Temperature: -20 to +50, -15 and +55 degrees Centigrade

Voltage: 27.6, 20.4, 10.8 and 32.2 Volts DC

2.3 Test Period

Item received date: 2014-11-25

Test period : 2014-11-25 – 2014-11-26 and 2015-03-08 and 2016-11-23

2.4 Test Engineers

Jan G Eriksen

Bjørn Nordset

2.5 Test Equipment

See list of test equipment in clause 7.

The Rohde & Schwarz spectrum analyser (No 1 in list) has been used for all level, frequency, and deviation measurements.

2.6 Other Comments

The manufacturer's representive was present during all tests to monitor BER (Bit Erroro Rate) and PER (Packet error rate), to select the frequencies, to set-up communication, and perform reading of system performance.

3 TEST REPORT SUMMARY

3.1 General

The tests were conducted on a sample of the equipment for the purpose of demonstrating compliance with the following specification:

IEC 61993-2: 2012-10, Edition 2.0: Maritime navigation and radiocommunication equipment and systems – Automatic identification systems (AIS) Part 2: Class A shipborne equipment of the automatic identification system (AIS) – Operational and performance requirements, methods of test and required test results .

The test methods have been in accordance with Comlab 1003 where applicable.
All tests have been performed conducted.

☒ Production Unit

☐ Pre-production Unit

THIS TEST REPORT APPLIES ONLY TO THE ITEM(S) AND CONFIGURATIONS TESTED.

Deviations from, additions to, or exclusions from the test specifications are described in “Summary of Test Data”.

Nemko Group authorizes the above named company to reproduce this report provided it is reproduced in its entirety and for use by the company’s employees only. Any reproduction of parts of this report requires approval in writing from Nemko Group.

Any use which a third party makes of this report, or any reliance on or decisions to be made based on it, are the responsibility of such third parties. Nemko Group accepts no responsibility for damages suffered by any third party as a result of decisions made or actions based on this report.

3.2 Test Summary

The tests listed below had been tested according to IEC 61993-2 (2012).

Relevant IEC 61993-2 Clause	IEC 61993-2 Test discription	Verdict
15.1 TDMA Transmitter		
15.1.1	Frequency error	Pass
15.1.2	Carrier power	Pass
15.1.4	Transmitter modulation accuracy	Pass
15.2 TDMA Receivers		
15.2.1	Sensitivity	Pass
15.2.2	Error behaviour at high input levels	Pass
15.2.3	Co-channel rejection for	Pass
15.2.4	Adjacent channel selectivity	Pass
15.2.5	Spurious response rejection	Pass
15.2.6	Intermodulation response rejection and blocking	Pass
15.3.2	Spurious emissions from the receiver	Pass
D.2.1	Maximum Sensitivity	Pass
D.2.2	Error behaviour at high input levels	Pass
D.2.3	Co-Channel rejection	Pass
D.2.4	Adjacent channel selectivity	Pass
D.2.5	Spurious response rejection	Pass
D.2.6	Intermodulation response rejection	Pass
D.2.7	Blocking or desensitization	Pass
D.2.8	Conducted spurious from receiver	Pass

Note:
Pass Passed, the equipment fulfils the requirement
Fail Failed, the equipment does not fulfil the requirement
NA Not applicable, the requirement is not applicable
NT Not tested, the test is not performed even though the requirement is relevant

4 Test Results

4.1 Frequency Error

Clause 15.1.1

The transmitter was set to 156.025 and 162.025 MHz respectively. The output power was set to nominal power level.

Required results: **Normal test conditions: ±0.5 kHz**
Extreme test conditions: ±1.0 kHz

	Measured Frequency (MHz)		Error (kHz)		Verdict
Nominal Frequency	**156.025**	**162.025**	**156.025**	**162.025**	
Test conditions					
	Normal test conditions				
+24dC, 18V DC	156.025003	162.024993	0.003	-0.007	Pass
	Extreme test conditions				
-15 dC, 10.8V DC	156.024995	162.024995	-0.005	-0.005	Pass
-15 dC, 31.2V DC	156.024995	162.024995	-0.005	-0.005	Pass
+55 dC, 10.8V DC	156.025000	162.024994	0.000	-0.006	Pass
+55 dC, 31.2V DC	156.025000	162.024994	0.000	-0.006	Pass

Nominal Frequency 156.025 MHz

Test conditions	Measured Frequency (MHz)	Error (Hz)	Error (ppm)	Verdict
+20 °C, 24V DC +15%	156.0250154	15.4	0.099	Pass
+20 °C, 24V DC -15%	156.0250126	12.6	0.081	Pass
-20 °C, 24V DC	156.0250007	0.7	0.004	Pass
-10 °C, 24V DC	156.0249985	-1.5	-0.010	Pass
0 °C, 24V DC	156.0250090	9.0	0.058	Pass
+10 °C, 24V DC	156.0250155	15.5	0.099	Pass
+20 °C, 24V DC	156.0250140	14.0	0.090	Pass
+30 °C, 24V DC	156.0250067	6.7	0.043	Pass
+40 °C, 24V DC	156.0250039	3.9	0.025	Pass
+50 °C, 24V DC	156.0250035	3.5	0.022	Pass

Result: PASS

Test Equipment Used: 1 – 10

4.2 Carrier Power

Clause 15.1.2

The transmitter was set to 156.025 and 162.025 MHz respectively. The output power was set to nominal power level.

Required results: **Normal test conditions: ±1.5 dB from Nominal Power Level**
Extreme test conditions: ±3.0 dB from Nominal Power Level

Test conditions	Nominal Frequency (MHz)		Verdict
	156.025	**162.025**	
41 dBm Nominal Power Level			
	Normal test conditions		
+24dC, 18V DC	41.0	40.2	Pass
	Extreme test conditions		
-15 dC, 10.8V DC	38.8	40.1	Pass
-15 dC, 31.2V DC	40.8	40.1	Pass
+55 dC, 10.8V DC	38.9	39.6	Pass
+55 dC, 31.2V DC	40.4	39.6	Pass
30 dBm Nominal Power Level			
	Normal test conditions		
+24dC, 18V DC	30.1	29.4	Pass
	Extreme test conditions		
-15 dC, 10.8V DC	29.9	29.2	Pass
-15 dC, 31.2V DC	29.9	29.2	Pass
+55 dC, 10.8V DC	29.5	28.8	Pass
+55 dC, 31.2V DC	29.5	28.8	Pass

Result: PASS

Test Equipment Used: 1 - 10

4.3 Modulation Accuracy

Clause 15.1.4

The transmitter was set to 156.025 and 162.025 MHz respectively, and was modulated with test signals TS2 and TS3 on both frequencies. The output power was set to nominal power level.

Required results: **Normal test conditions:** **TS2: 1740 ± 175 Hz**
TS3: 2400 ± 240 Hz

Extreme test conditions: **TS2: 1740 ± 350 Hz**
TS3: 2400 ± 480 Hz

	Measured Deviation (MHz)		Verdict
Nominal Frequency	**156.025**	**162.025**	
Test conditions	**Test Signal TS2**		
	Normal test conditions		
+24dC, 18V DC	+1813 / -1804	+1748 / -1770	Pass
	Extreme test conditions		
-15 dC, 10.8V DC	+1806 / -1819	+1760 / -1772	Pass
-15 dC, 31.2V DC	+1885 / -1787	+1747 / -1785	Pass
+55 dC, 10.8V DC	+1850 / -1796	+1776 / -1812	Pass
+55 dC, 31.2V DC	-1797 / +1819	+1758 / -1802	Pass
	Test Signal TS3		
	Normal test conditions		
+24dC, 18V DC	+2600 / -2559	+2452 / -2471	Pass
	Extreme test conditions		
-15 dC, 10.8V DC	+2570 / -2600	+2430 / -2480	Pass
-15 dC, 31.2V DC	+2560 / -2620	+2480 / -2430	Pass
+55 dC, 10.8V DC	+2550 / -2360	+2390 / -2410	Pass
+55 dC, 31.2V DC	+2570 / -2560	+2380 / -2410	Pass

Result: PASS

Test Equipment Used: 1 – 10

4.4 Sensitivity

Clause 15.2.1

The transmitter was set to 156.025 and 162.025 MHz respectively.

Tests shall be performed on two channels with a input signal level of -107 dBm at nominal frequency and -104 dBm at nominal frequency ±500 Hz. The test shall be repeated with -101 dBm under extreme test conditions.

Required results:	**Normal test conditions:**	**PER < 20%**	
	Extreme test conditions:	**PER < 20%**	
Input signal levels	**Normal test conditions:**	**wanted signal:**	**-107 dBm**
	Extreme test conditions:	**wanted signal:**	**-101 dBm**

	Transmitted Frequency (MHz)		**Verdict**
	156.025	**156.025 ± 500 Hz**	
	Measured PER (%)		
Test conditions			
	Normal test conditions		
+24dC, 18V DC	0	0	Pass
	Extreme test conditions		
-15 dC, 10.8V DC	0	0	Pass
-15 dC, 31.2V DC	0	0	Pass
+55 dC, 10.8V DC	0	0	Pass
+55 dC, 31.2V DC	0	0	Pass
	162.025	**162.025 ± 500 Hz**	
+24dC, 18V DC	0	0	Pass
	Extreme test conditions		
-15 dC, 10.8V DC	0	0	Pass
-15 dC, 31.2V DC	0	0	Pass
+55 dC, 10.8V DC	0	0	Pass
+55 dC, 31.2V DC	0	0	Pass

Result: PASS

Test Equipment Used: 1 – 10

4.5 Error behaviour at high input signal level

Clause 15.2.2

The transmitter was set to 156.025 and 162.025 MHz respectively and modulated with test signal number 5. The input signal level at receiver shall be -7 dBm, and the test shall be repeated with a input signal level of -77 dBm.

Required results:	**Normal test conditions:**	**PER < 1%**	
Input signal levels	**Normal test conditions:**	**wanted signal:**	**-7 dBm**
		wanted signal:	**-77 dBm**

Result: PASS

Test Equipment Used: 1 – 10

4.6 Co-channel rejection

Clause 15.2.3

The transmitter was set to 156.025 and 162.025 MHz respectively.

Two generators, A and B, shall be connected to the receiver via a combining network as shown in the figure below. The wanted signal, provided by signal generator A, shall be at the nominal frequency of the receiver and shall be modulated to generate test signal number 5. The unwanted signal, provided by generator B, shall also be at the nominal frequency of the receiver. Generator B shall be modulated to generate test signal number 4, either continuously or in the same time period as that used by generator A for test signal number 5.The content of the wanted and unwanted signals shall not be synchronised.

The level of the wanted signal from generator A shall be adjusted to –104 dBm at the receiver. The level of the unwanted signal from generator B shall be adjusted to –114 dBm at the receiver. The message measuring test set shall be monitored and the packet error rate (PER) observed. The measurement shall be repeated for displacements of the unwanted signal of ± 1 kHz from the nominal frequency of the receiver and the PER again observed. Tests shall be performed on 2 channels (156,025 MHz, 162,025 MHz)

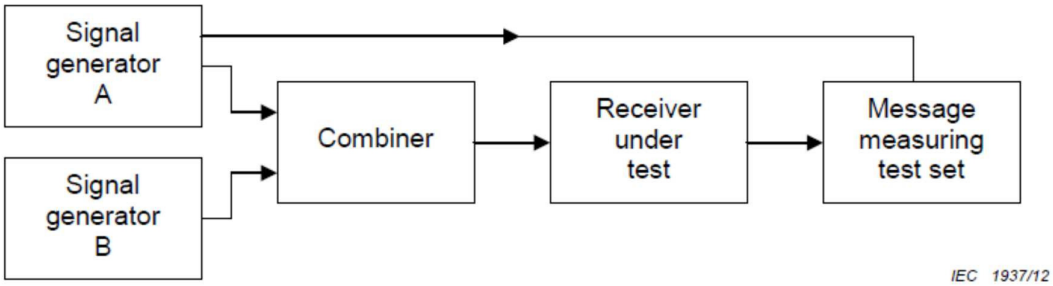

Required results: **Normal test conditions:** **PER < 20%**

Input signal levels **Normal test conditions:** **wanted signal: -104 dBm**
unwanted signal: -114 dBm

	Transmitted Frequency (MHz)		Verdict
	Measured PER (%)		
	156.025	156.025 ± 1000 Hz	
+24dC, 18V DC	0	0	Pass
	162.025	162.025 ± 1000 Hz	
+24dC, 18V DC	0	0	Pass

Result: PASS

Test Equipment Used: 1 – 10

4.7 Adjacent-channel selectivity

Clause 15.2.4

The transmitter was set to 156.025 and 162.025 MHz respectively.

The measurement configuration for co-channel rejection (15.2.3) shall be used. The wanted signal, provided by signal generator A, shall be at the nominal frequency of the receiver and shall be modulated to generate test signal number 5. The unwanted signal, provided by generator B, shall be frequency modulated with a 400 Hz sine wave giving a deviation of ± 3 kHz. Generator B shall be at a frequency 25 kHz above that of the wanted signal.

The level of the wanted signal from generator A shall be adjusted to a level of –104 dBm at the receiver. The level of the unwanted signal from generator B shall be adjusted to –34 dBm. The message measuring test set shall be monitored and the packet error rate observed. Repeat the above measurement with the unwanted signal 25 kHz below the wanted signal. The test shall be performed on 2 channels (156,025 MHz, 162,025 MHz) and repeated under extreme conditions with generator A adjusted to –98 dBm and generator B adjusted to –38 dBm

Required results:	**Normal test conditions:**	**PER < 20%**	
	Extreme test conditions:	**PER < 20%**	
Input signal levels	**Normal test conditions:**	**wanted signal:**	**-104 dBm**
		unwanted signal:	**-34 dBm**
	Extreme test conditions:	**wanted signal:**	**-98 dBm**
		unwanted signal:	**-38 dBm**

	Transmitted Frequency (MHz)		**Verdict**
	156.025	**162.025**	
	Measured PER (%)		
	Normal test conditions		
+24dC, 18V DC	0	0	Pass
	Extreme test conditions		
-15 dC, 10.8V DC	0	0	Pass
-15 dC, 31.2V DC	0	0	Pass
+55 dC, 10.8V DC	0	0	Pass
+55 dC, 31.2V DC	0	0	Pass

Result: PASS

Test Equipment Used: 1 – 10

4.8 Spurious response rejection

Clause 15.2.5

The transmitter was set to 156.025 and 162.025 MHz respectively.

The signal level of wanted signal (generator A) shall be -104 dBm. The unwanted signal level (generator B) shal be -27 dBm.

The spurious response rejection is a measure of the capability of the receiver to receive a wanted modulated signal without exceeding a given degradation due to the presence of an unwanted modulated signal at any other frequency, at which a response is obtained.

The initial evaluation of the unit shall be performed over the “limited frequency range” and shall then be performed at the frequencies identified from this test and at “specific frequencies of interest” (as defined below).

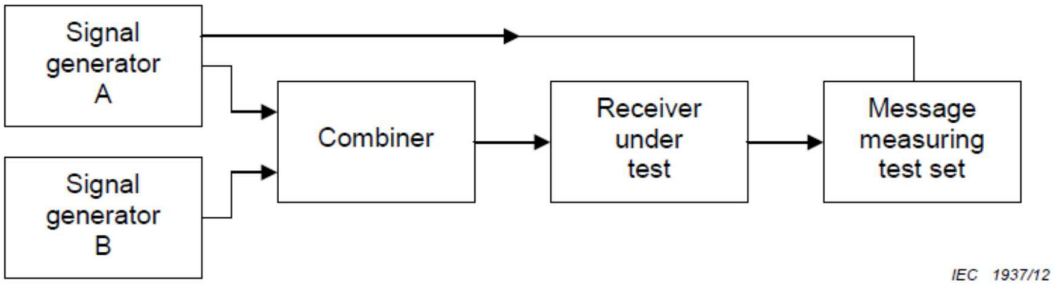

Required results:	**Normal test conditions:**	**PER < 20% at any frequency separated from the nominal frequency of two channel bandwidths or more**
Input signal levels	**Normal test conditions:**	**wanted signal: -104 dBm** **unwanted signal: -27 dBm**

Intermediate and Local oscillator frequencies as declared by the manufacturer:

Intermediate Frequency: 21.4 MHz

Local Oscillator Frequency:
156.025 MHz 134.625 MHz
162.025 MHz: 140.625 MHz

This corresponds to “specific frequencies of interest” of:

Reception frequency 156.025 MHz:
247.850, 290.650, 382.475, 425.275, 517.100, and 559.900 MHz

Reception frequency 162.025 MHz:
259.850, 302.650, 400.475, 443.275, 541.100, and 583.900 MHz

Result: PASS

NOTE: The EUT has only been subject to this particular test at the frequencies “Specific frequencies of interest”.

Test Equipment Used: 1 – 10

4.9 Intermodulation response rejection and blocking

Clause 15.2.6

The intermodulation response rejection and blocking is the capability of the receiver to receive a wanted modulated signal, without exceeding a given degradation due to the presence of two or more unwanted signals with a specific frequency relationship to the wanted signal frequency.

Four signal generators shall be connected to the receiver under test (see figure below). The wanted signals, represented by signal generator A, shall be modulated to generate test signal number 5. The wanted signal level at the RF input of the receiver shall be set to –101 dBm.

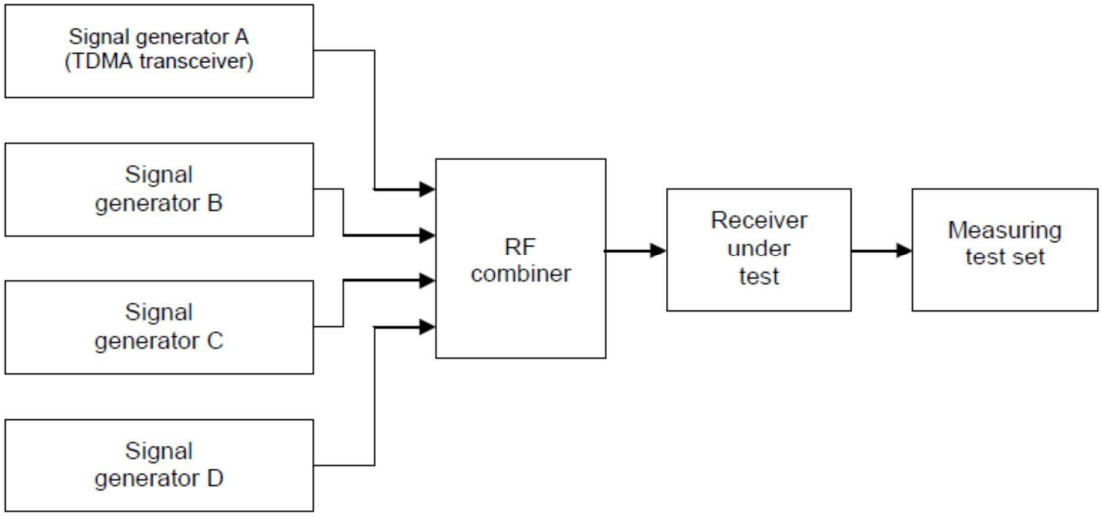

The unwanted signal from signal generator B shall be modulated by 400 Hz with a deviation of ±3 kHz and adjusted to a frequency 500 kHz above or below the frequency of the wanted signal. The unwanted signal from signal generator C shall be unmodulated and adjusted to a frequency 1 000 kHz above or below the frequency of the wanted signal. The unwanted signal levels from signal generators B and C at the RF input of the receiver shall be set to –27 dBm.

The unwanted signal from signal generator D shall be unmodulated and adjusted to a frequency 5.725 MHz above or below the frequency of the wanted signal. The unwanted signal level from signal generator D at the RF input of the receiver shall be set to –15 dBm.

	GeneratorA	GeneratorB	GeneratorC	GeneratorD
Test#1	156,025	156,525	157,025	161,750
Test#2	162,025	161,525	161,025	156,300

Required results: **Normal test conditions:** **PER < 20%**

Input signal levels **Normal test conditions:** **wanted signal: -101 dBm**
unwanted signal B&C: -27 dBm
unwanted signal D: -15 dBm

Result: PASS

Test Equipment Used: 1 – 10

4.10 Spurious emissions from the receiver

Clause 15.3.2

The receiver was set to 162.025 MHz.

No significant spurious signals were detected in the frequency area 9 kHz – 4 GHz

See the plots in Annex.

Required results:

Frequency range	9 kHz to 1 GHz	1 to 4GHz
Limit of measured spurious	2 nW (-57,0 dBm)	20 nW (-47,0 dBm)

Measured Results

Frequency range	Measured level (dBm)	Limit (dBm)
9 – 150 kHz	-83.4 @ 134.010 kHz	-57
0.150 – 30 MHz	-78.2 @ 150.000 kHz	-57
30 – 1000 MHz	-67.4 @ 987.890 MHz	-57
1000 – 4000 MHz	-60.3 @ 3222.00 MHz	-47

Result: PASS

Test Equipment Used: 1 - 10

4.11 Maximum sensitivity

Clause D.2.1

The transmitter was set to 156.525 MHz, and 156.525 MHz ± 1500 Hz.

The signal level at the receiver input shall be -107 dBm under normal test conditions and -101 dBm under extreme test conditions.

Required results:	**Normal test conditions:**	**BER < 0.010**	
	Extreme test conditions:	**BER < 0.010**	
Input signal levels	**Normal test conditions:**	**wanted signal:**	**-107 dBm**
	Extreme test conditions:	**wanted signal:**	**-101 dBm**

	Transmitted Frequency (MHz)		**Verdict**
	156.525	**156.525 ± 1500 Hz**	
	Measured PER (%)		
Test conditions			
	Normal test conditions		
+24dC, 18V DC	0	0	Pass
	Extreme test conditions		
-15 dC, 10.8V DC	0	NA *	Pass
-15 dC, 31.2V DC	0	NA *	Pass
+55 dC, 10.8V DC	0	NA *	Pass
+55 dC, 31.2V DC	0	NA *	Pass

Note: * NA (Not Appicable)

Result: PASS

Test Equipment Used: 1 – 10

4.12 Error behaviour at high input signal level

Clause D.2.2

The transmitter was set to 156.525 MHz with test signal number 1.

The signal level shall be -7 dBm.

Required results:	**Normal test conditions:**	**BER < 0.010**	
Input signal levels	**Normal test conditions:**	**wanted signal:**	**-7 dBm**

Result: PASS

Test Equipment Used: 1 – 10

4.13 Co-Channel rejection

Clause D.2.3

The transmitter was set to 156.525 MHz.

The signal level of the wanted signal shall be -104 dBm. The signal level of the unwanted signal shall be -114 dBm.

The co-channel rejection is a measure of the capability of the receiver to receive a wanted modulated signal without exceeding a given degradation due to the presence of an unwanted modulated signal, both signals being at nominal frequency of the receiver.

Required results:	**Normal test conditions:**	**BER < 0.010**	
Input signal levels	**Normal test conditions:**	**wanted signal:**	**-104 dBm**
		unwanted signal:	**-114 dBm**

	Unwanted signal (MHz)		**Verdict**
	156.525	**156.525 ± 3000 Hz**	
	Measured BER (%)		
Test conditions			
	Normal test conditions		
+24dC, 18V DC	0	0	Pass

Result: PASS

Test Equipment Used: 1 – 10

4.14 Adjacent channel selectivity

Clause D.2.4

The adjacent channel selectivity characterises the capability of the receiver to receive a wanted modulated signal without exceeding a given degradation due to the presence of an unwanted modulated signal that differs in frequency from the wanted signal by 25 kHz.

The signal level of the wanted signal shall be -104 dBm (-98 dBm at extreme conditions), and the signal level of the unwanted signal shall be -34 dBm (-38 dBm at extreme conditions).

The transmitter was set to 156.525 MHz.

Required results:	**Normal test conditions:**	**BER < 0.010**	
	Extreme test conditions:	**BER < 0.010**	
Input signal levels	**Normal test conditions:**	**wanted signal:**	**-104 dBm**
		unwanted signal:	**-34 dBm**
	Extreme test conditions:	**wanted signal:**	**-98 dBm**
		unwanted signal:	**-38 dBm**

	Transmitted Frequency (MHz)		**Verdict**
	156.500	**156.550**	
	Measured PER (%)		
Test conditions			
	Normal test conditions		
+24dC, 18V DC	0	0	Pass
	Extreme test conditions		
-15 dC, 10.8V DC	0	0	Pass
-15 dC, 31.2V DC	0	0	Pass
+55 dC, 10.8V DC	0	0	Pass
+55 dC, 31.2V DC	0	0	Pass

Result: PASS

Test Equipment Used: 1 – 10

4.15 Spurious response rejection

Clause D.2.5

The transmitter was set to 156.525 MHz.

The signal level of the wanted signal shall be -104 dBm, and the signal level from the unwanted signal shall be -34 dBm.

The spurious response rejection is a measure of the capability of the receiver to receive a wanted modulated signal without exceeding a given degradation due to the presence of an unwanted modulated signal at any other frequency, at which a response is obtained.

The initial evaluation of the unit shall be performed over the “limited frequency range” and shall then be performed at the frequencies identified from this test and at “specific frequencies of interest” (as defined below).

Required results:	**Normal test conditions:**	**BER < 0.010 at any frequency separated from the nominal frequency of two channel bandwidths or more.**	
Input signal levels:	**Normal test conditions:**	**wanted signal:**	**-104 dBm**
		unwanted signal:	**-34 dBm**

Intermediate and Local oscillator frequencies as declared by the manufacturer:

Intermediate Frequency: 45.0 MHz

Local Oscillator Frequency:
156.525 MHz 201.525 MHz

This corresponds to “specific frequencies of interest” of:

Reception frequency 156.525 MHz:
358.050, 448.050, 559.575, 649.575, 761.100, and 851.100 MHz

Result: PASS

NOTE: The EUT has only been subject to this particular test at the frequencies “Specific frequencies of interest”.

Test Equipment Used: 1 – 10

4.16 Intermodulation response rejection

Clause D.2.6

The transmitter was set to 156.525 MHz.

The level of the wanted signal shall be -104 dBm, and the signal level of the unwanted signal shall be -39 dBm.

The intermodulation response ratio characterises the capability of the receiver to receive a wanted modulated signal without exceeding a given degradation due to the presence of two or more unwanted signals with a specific frequency relationship to the wanted signal frequency.

The wanted signal represented by signal generator A (see figure below) shall be at the nominal frequency of the receiver and shall be standard test signal number 1. The level of the wanted signal shall be –104 dBm.

The unwanted signal from signal generator B (see Figure D.1) shall be unmodulated and adjusted to a frequency 50 kHz above the nominal frequency of the receiver. The second unwanted signal from signal generator C (see Figure D.1) shall be modulated by 400 Hz with a deviation of ± 3 kHz and adjusted to a frequency 100 kHz above the nominal frequency of the receiver. The input level of each unwanted signal shall be –39 dBm. The test shall be repeated with the frequency of the unwanted signals below the nominal frequency of the receiver.

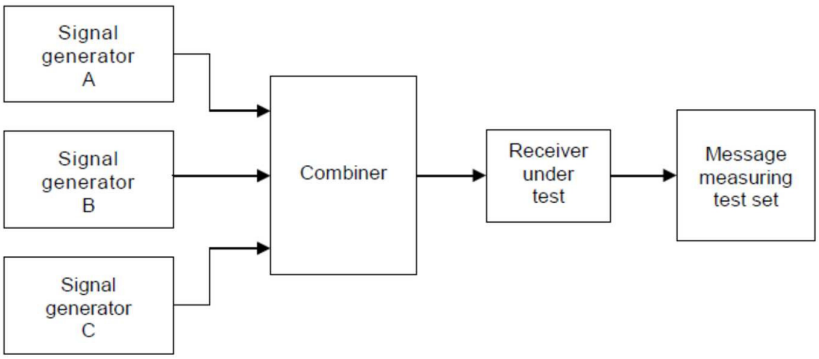

Required results: **Normal test conditions:** **BER < 0.010**

Input signal levels: **Normal test conditions:** **wanted signal: -104 dBm**
unwanted signal: -39 dBm

	Unwanted signal (MHz)		Verdict
	156.525 ± 50 kHz	156.525 ± 100 kHz	
	Measured BER (%)		
	Normal test conditions		
+24dC, 18V DC	0	0	Pass

Result: PASS

Test Equipment Used: 1 – 10

4.17 Blocking or desensitisation

Clause D.2.7

The transmitter was set to 156.525 MHz.

The level of the wanted signal shall be -104 dBm, and the signal level of the unwanted signal shall be -20 dBm.

The blocking immunity characterises the capability of the receiver to receive a wanted modulated signal without exceeding a given degradation due to the presence of an unwanted modulated signal with frequencies outside the band of the receiver.

The wanted signal shall be standard test signal number 1. The level of the wanted signal shall be –104 dBm. The unwanted signal shall be unmodulated. The frequency shall be at –10 MHz and –1 MHz and also at +1 MHz and +10 MHz relative to the nominal frequency of the wanted signal. The level of the unwanted signal shall be –20 dBm.

Required results:	**Normal test conditions:**	**BER < 0.010**	
Input signal levels:	**Normal test conditions:**	**wanted signal:**	**-104 dBm**
		unwanted signal:	**-20 dBm**

Measured BER:

BER 0.002 at unwanted signal of +1 MHz, 0 at all other unwanted signals.

Result: PASS

Test Equipment Used: 1 – 10

4.18 Spurious emissions from the receiver

Clause D.2.8

See clause 4.10 of this report. See plots in Annex.

Result: PASS

5 Measurement uncertainty

The following measurement uncertainty figures have been extracted from the Nemko Quality document “TM-NO-WLS-204A, Measurement uncertainty calculations for radio measurements”.

	U95 Uncertainty	Unit
TX measurements:		
Transmitter frequency	+36 / -36	Hz
Transmitter power	+0.70 / -0.73	dB
Transmitter modulation	+17 / -17	Hz
RX measurements:		
All signal level measurements at receiver	1.78 / -1.88	dB

6 PHOTOGRAPHS OF THE EUT

AIS module of AIS300

Front view – AIS300

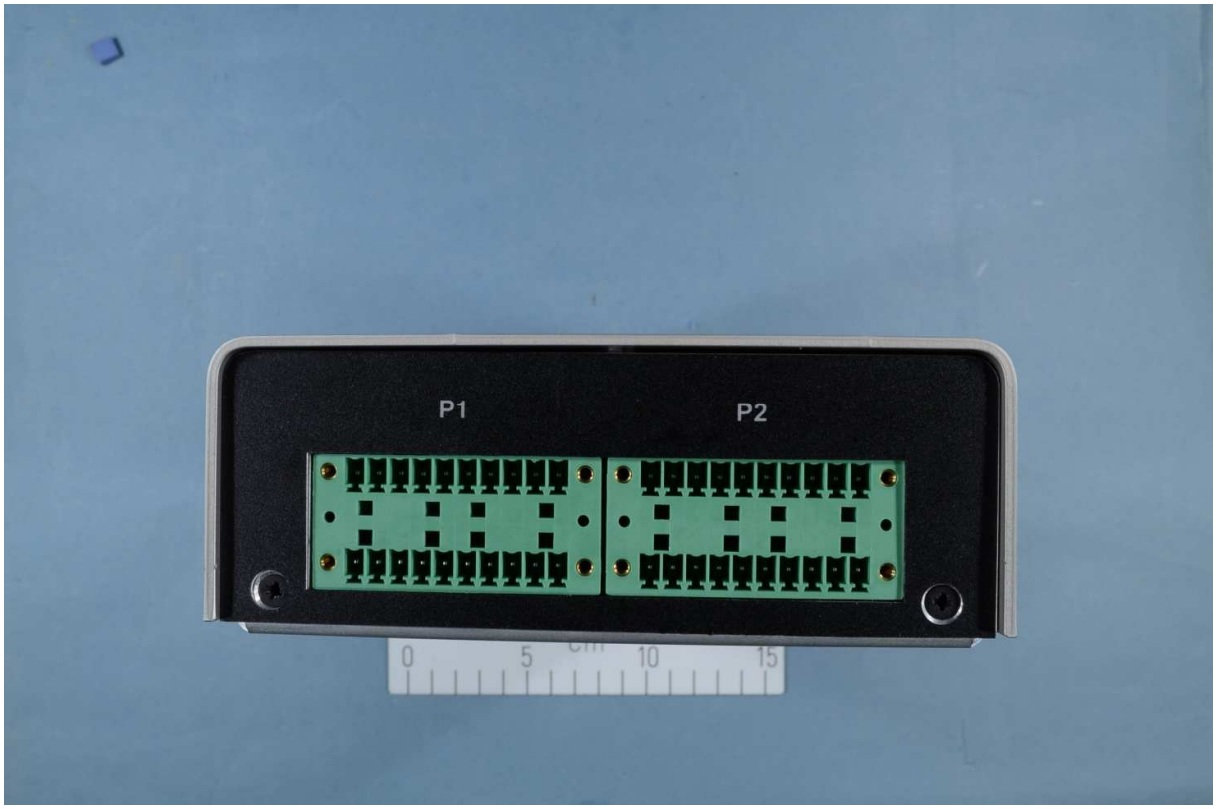

Rear view – AIS300

Bottom view – AIS300

7 Test Equipment Used

To facilitate inclusion on each page of the test equipment used for related tests, each item of test equipment and ancillaries are identified (numbered) by the testhouse.

No.	Ref. No	Type of Instrument	Manufacture	Type	Cal. date	Cal. Due
1.	LR1640	Spectrum analyzer	R&S	FSW26	09.2015	09.2017
2.	N-3662	Attenuator 0-11 dB	HP	8494B	09.2013	09.2015
3.	N-3663	Attenuator 0-110 dB	HP	8496B	09.2013	09.2015
4.	LR-1005	Attenuator 10 dB	Narda	765-10	03.2014	03.2016
5.	LR-1007	Attenuator 10 dB	Narda	765-10	03.2014	03.2016
6.	LR-1336	Generator, AF/../UHF	R&S	SMP04	09.2014	09.2016
7.	LR-1117	Generator, AF/../UHF	R&S	SMHU58	10.2014	10.2016
8.	LR-1179	Generator, AF/../UHF	R&S	SMHU58	06.2014	06.2016
9.	LR-1597	Voltmeter	Fluke	87 V	09.2014	09.2016
10.	LR-1194	Attenuator 30dB	Narda	768-30	03.2016	03.2018

8 Annex 1 – Measurement plots

8.1 Receiver Spurious emissions

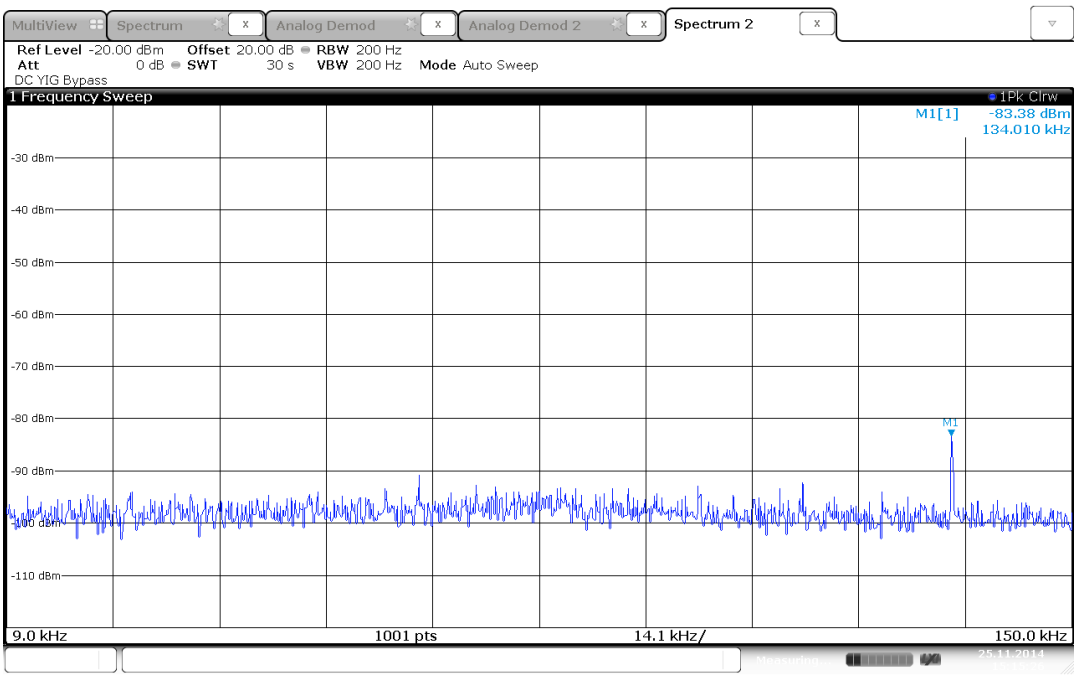

9 – 150 kHz

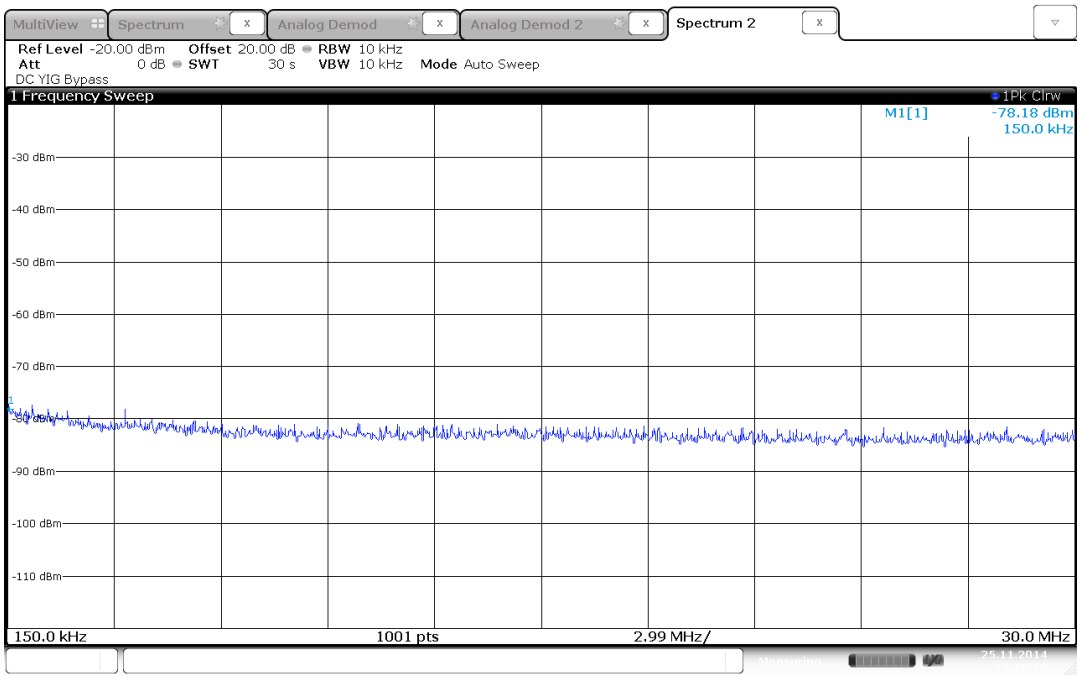

0.150 – 30 MHz

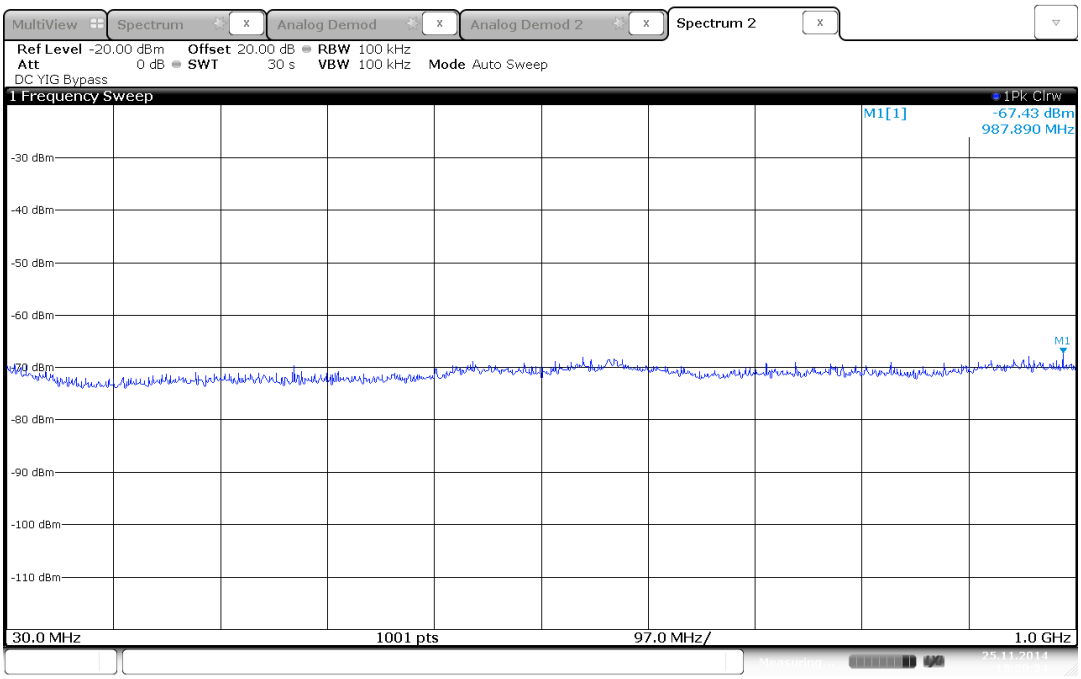

30 – 1000 MHz

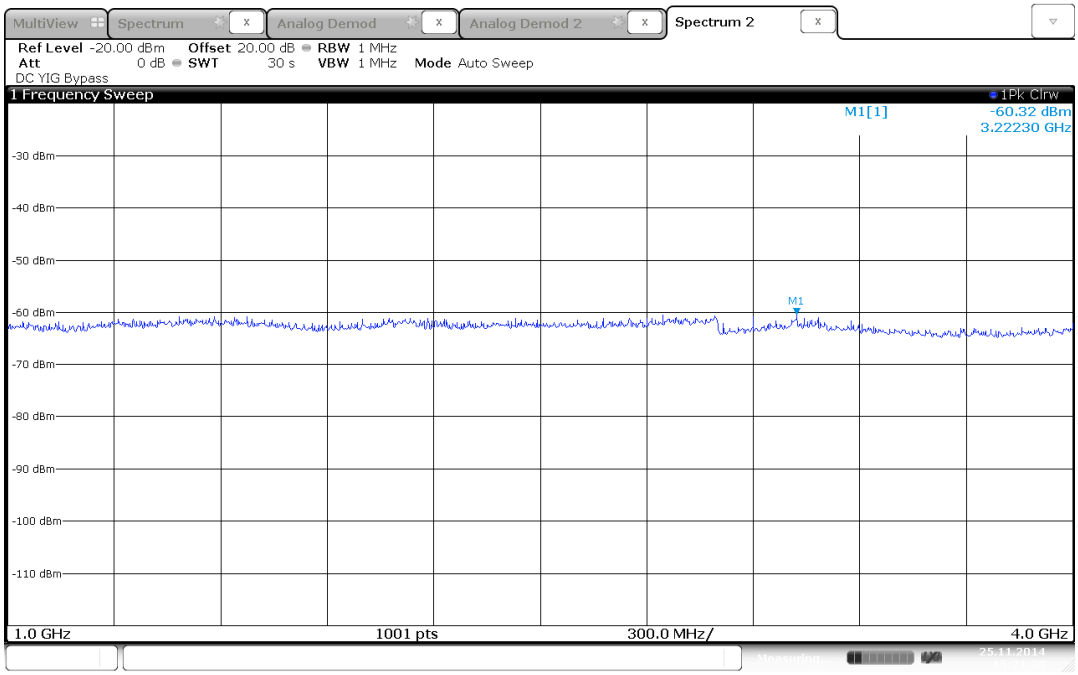

1 – 4 GHz