SAFFIRE LX

Installation Guide Outline

DRAFT

Document Revision: Draft 1.0

Table of Contents

Table of Contents

1. Introduction and disclaimers 3
2. Recommended Tools 3
3. Components 4
4. Install key cylinder (optional) 6
5. Install thumbturn spindle (optional) 6
6. Install the lock spindle 7
7. Setting up the inside trim assembly 9
8. Installing the locking mechanism on the door 12
8.1. Installing the mortise ASM (if lock equipped) 12
8.2. Installing the cylindrical models (if lock equipped) 15
9. Installing the lock housings on the door 18
10. Connecting the cables 19
11. Installating inside cover 20
12. Installing the outside lever handle 23
13. Install the batteries 23
14. Test lock functionality 24
15. Program the lock 24

Annex A.. 25

Annex B 28

Model: Saffire LX

Caution: Changes or modifications to this equipment not expressly approved by the party responsible for compliance could void the user's authority to operate the equipment.

This device complies with part 15 of the FCC Rules. Operation is subject to the following two conditions: (1) This device may not cause harmful interference, and (2) this device must accept any interference received, including interference that may cause undesired operation.

This device complies with Industry Canada’s licence-exempt RSSs. Operation is subject to the following two conditions: (1) This device may not cause interference; and (2) This device must accept any interference, including interference that may cause undesired operation of the device.

Le présent appareil est conforme aux CNR d'Industrie Canada applicables aux appareils radio exempts de licence. L'exploitation est autorisée aux deux conditions suivantes : (1) l'appareil ne doit pas produire de brouillage, et (2) l'utilisateur de l'appareil doit accepter tout brouillage radioélectrique subi, même si le brouillage est susceptible d'en compromettre le fonctionnement.

Made in Canada

©2018 dormakaba Lodging Systems.All trademarks and registered trademarks are the property of their respective owners.

1. Introduction and disclaimers

Caution: Please read and follow all directions carefully. Wear safety glasses when making the holes.

Target Audience: These instructions are designed for use by maintenance professionals or lock installers who are familiar with common safety practices and competent to perform the steps described. dormakaba is not responsible for damage or malfunction due to incorrect installation however arising.

Important: Carefully inspect windows, doorframe, door, etc. to ensure that the recommended procedures will not cause damage. dormakaba Lodging Systems standard warranty does not cover damages caused by installation.

Respect applicable building codes regarding handle height.

Definition of Terms: In these instructions, the term ASM refers to American Standard Mortise and ADB refers to Autodeadbolt Mortise.

Technical Assistance

For technical assistance, call:

1.877.468.3555 / +1.514.340.9025RT: 1.800.999.6213 / +1.248.837.3700

2. Recommended Tools

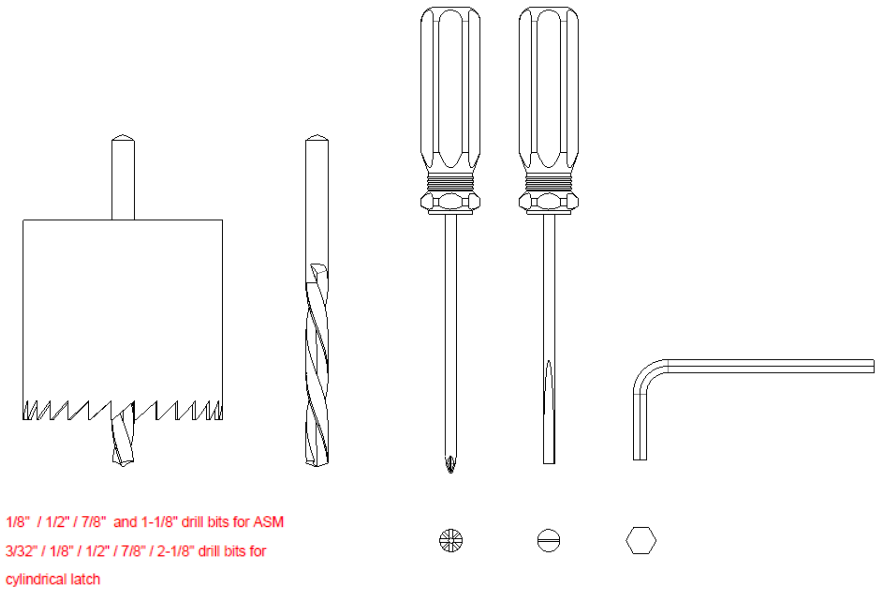

3. Components

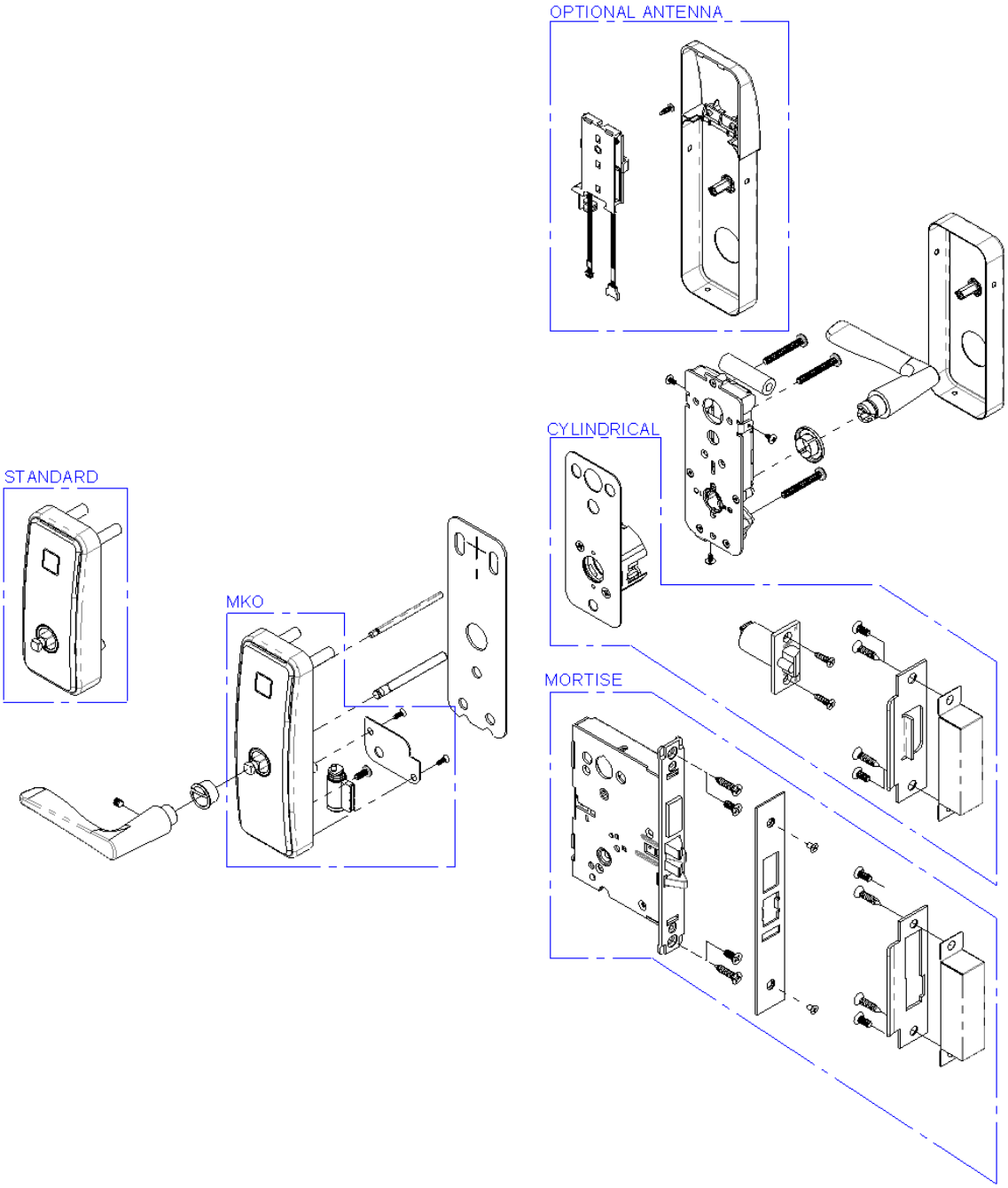

Hardware

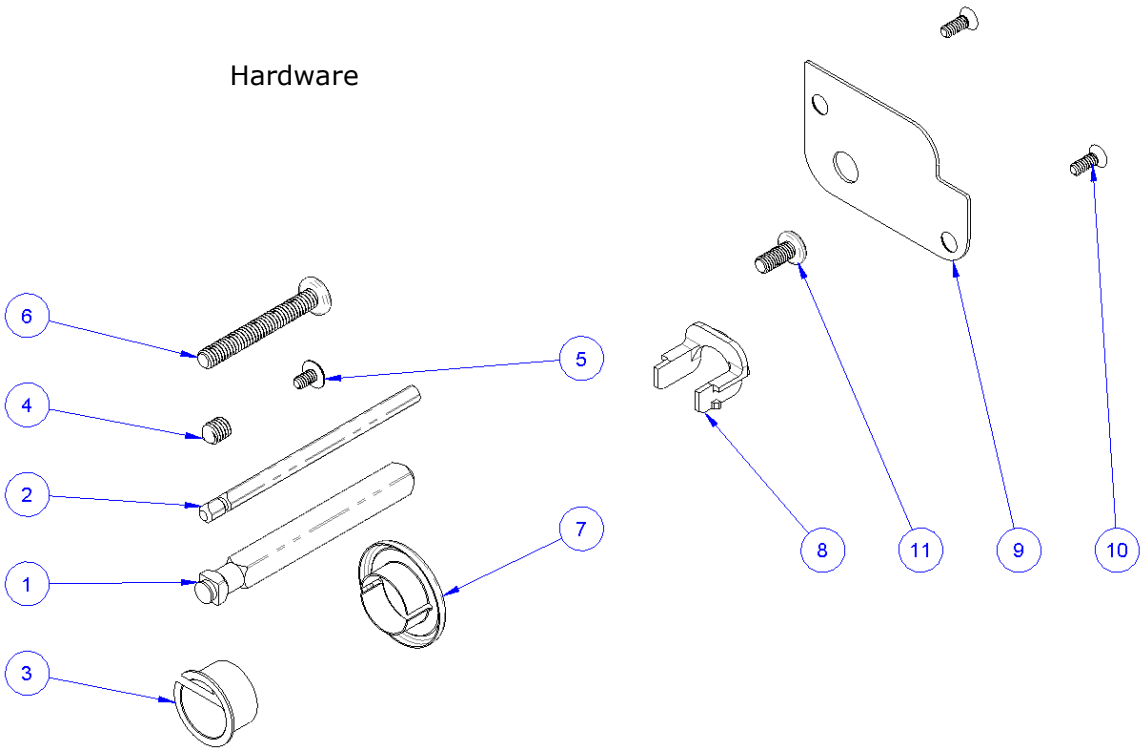

ITEM NO.	PART NUMBER	DESCRIPTION	QTY.
1	020-515480-1	SPINDLE LATCH	1
2	020-515481	SPINDLE THUMBTURN	1
3	017-515483	OUTSIDE BUSHING	1
4	-	SET SCREW	1
5	810-511257	SCREW 6-32 X 1/4 PHILLIPS NO.2	3
6	810-515998	SCREW 12-24X1-5/8 PHILLIPS NO.2	3
7	017-515489	INSIDE LEVER BUSHING	1
8	025-515498	SNAP-HOLDER FOR SPRING STOPPER	1
9	041-515465	ACCESS PLATE KEY CYLINDER	1
10	90273A146	SCREW 6-32 X 5/16 FLAT HEAD PHILLIPS NO.2	2
11	90272A828	SCREW 10-32 X 7/16 PAN HEAD PHILLIPS NO.2	1

For doors more than 2 1/2" thick up to 3 3/4", order the appropriate hardware bag to receive the correct length of spindles and mounting screws. Part# 062-XXXXXX-XXX; (XXX = choice of finish).

For outdoor installations, order gasket 033-515996-1 for standard lock and 033-515996-2 for MKO lock.

4. Install key cylinder (optional)

- Insert the cylinder core in the key override housing.
- Secure the cylinder core using screw (item 11).
- Secure the access plate key cylinder (item 9) over the key override housing.
- Secure the access plate using two screws (item 10).

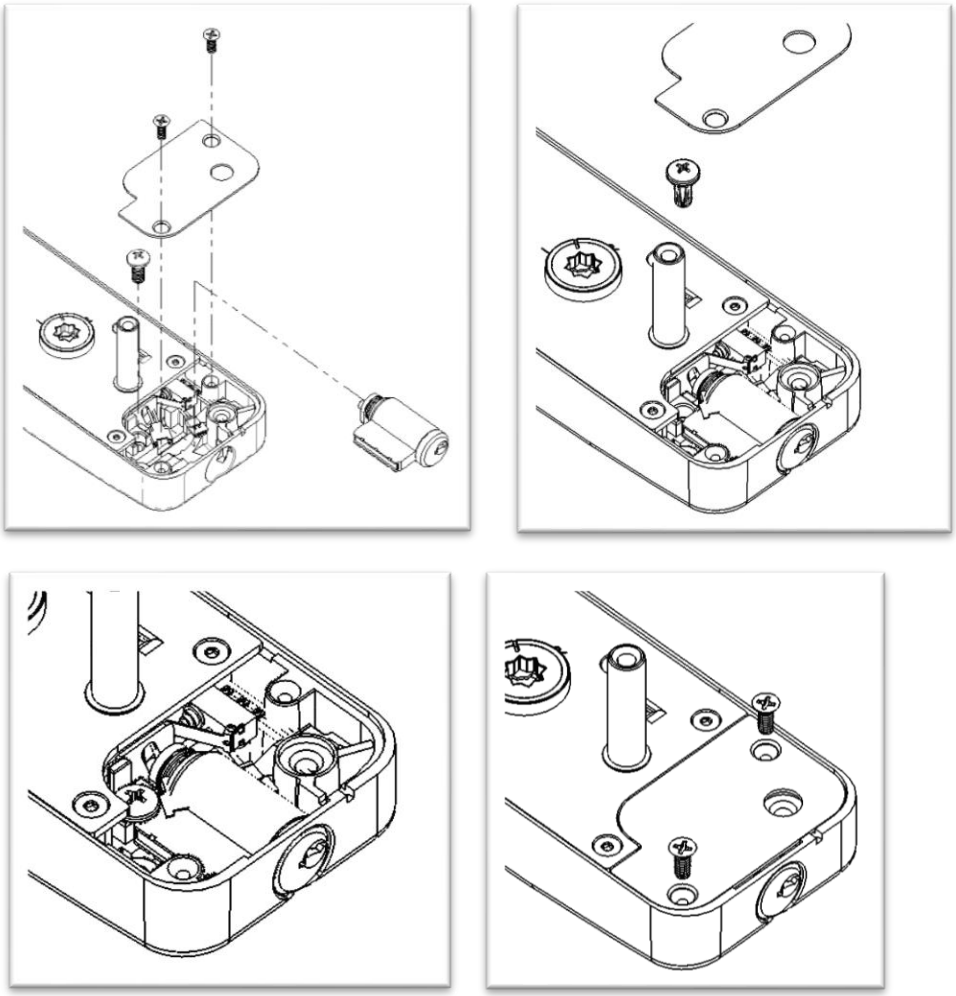

5. Install thumb turn spindle (optional)

- Verify that the line markers for the thumb turn hole are aligned. If the holes are misaligned, use the flat screwdriver to correct the position.
- Insert the thumb turn spindle (item 2) into the thumb turn hole. Press firmly to ensure the spindle clicks in place.
- Rotate the spindle to ensure that the part remains in place.

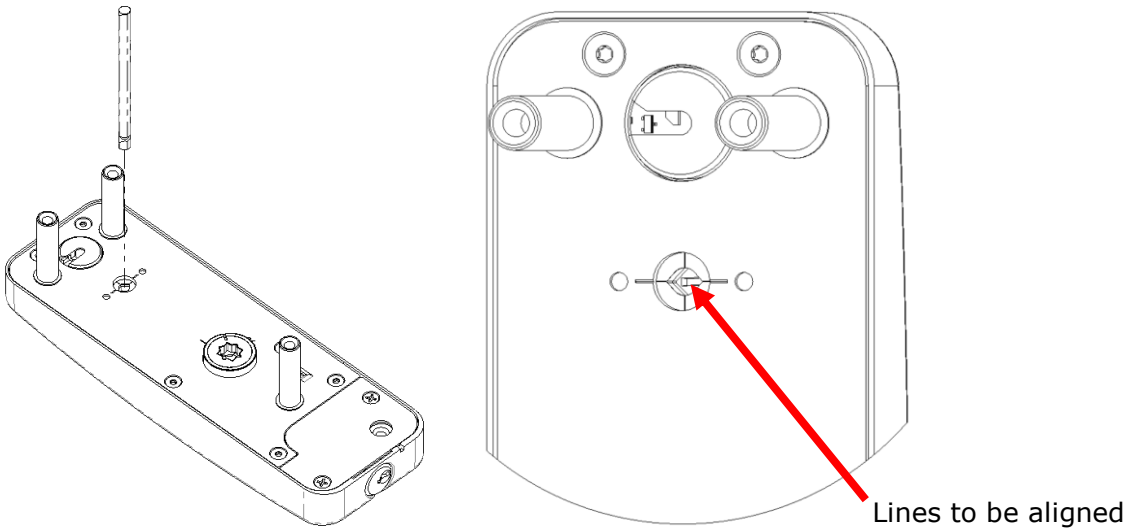

6. *Install the lock spindle*

The spindle must be installed and properly secured in the front lock housing assembly. The spindle is used to connect the handle to operate the opening and closing door mechanism.

Prior to installing the spindle, you must first adjust the required positioning of the hub receiving the spindle. There are 2 modes, Left Hand (LH) and Right Hand (RH) according door handing.

- Turn the hub for correct door handing by turning clockwise for right and counter clockwise for left.

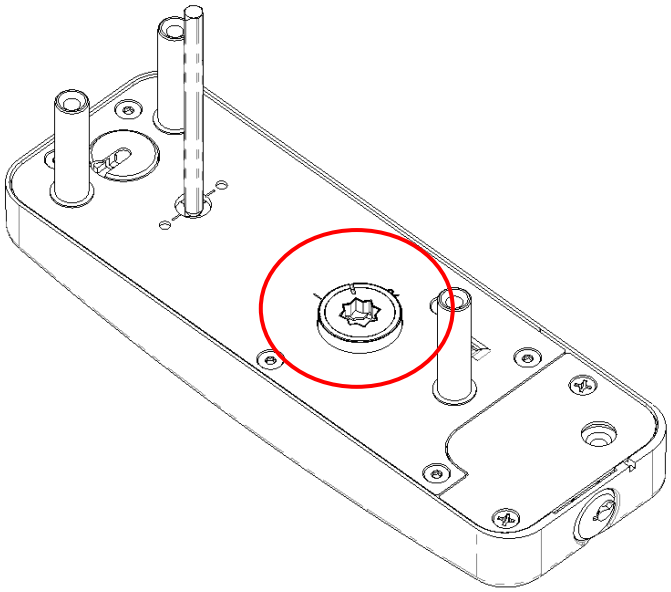

-

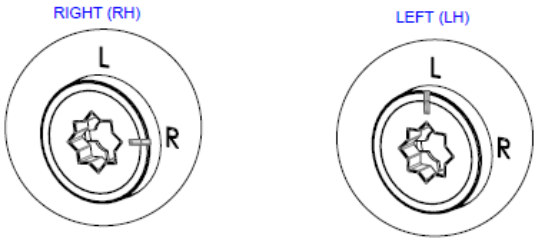

- Insert the spindle (item 1) smoothly until it clips.

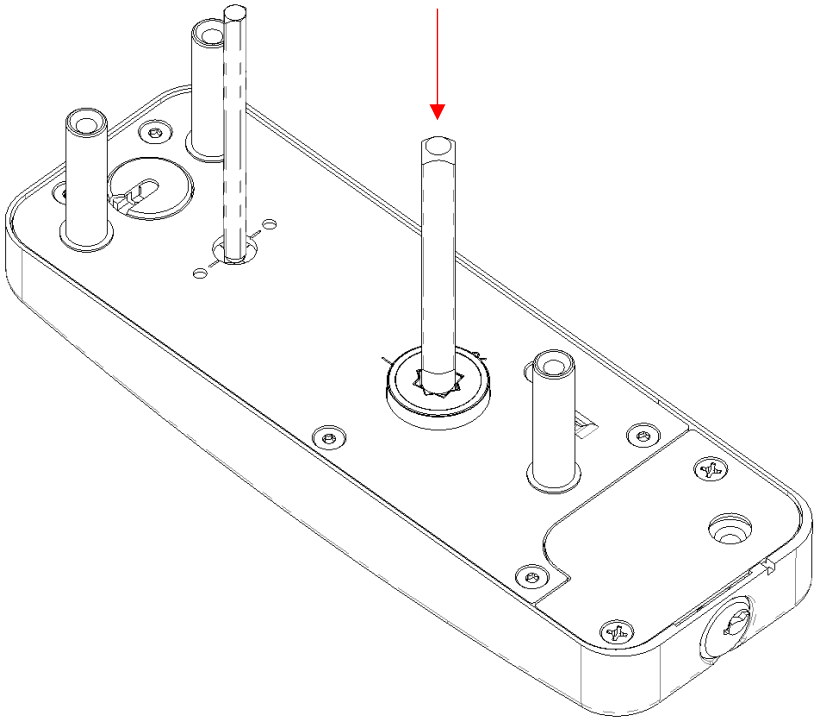

7. Setting up the inside trim assembly

Decide if the lever handle is a RH or LH position based on the door handing. The inside lever handle must be installed as is does not come preinstalled.

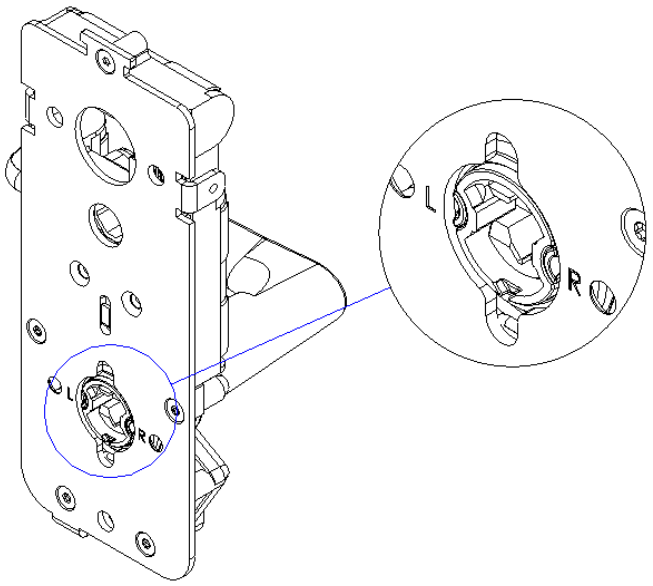

- To set proper handing, insert the lever from the back plate and turn in the direction required for the handing (L or R).

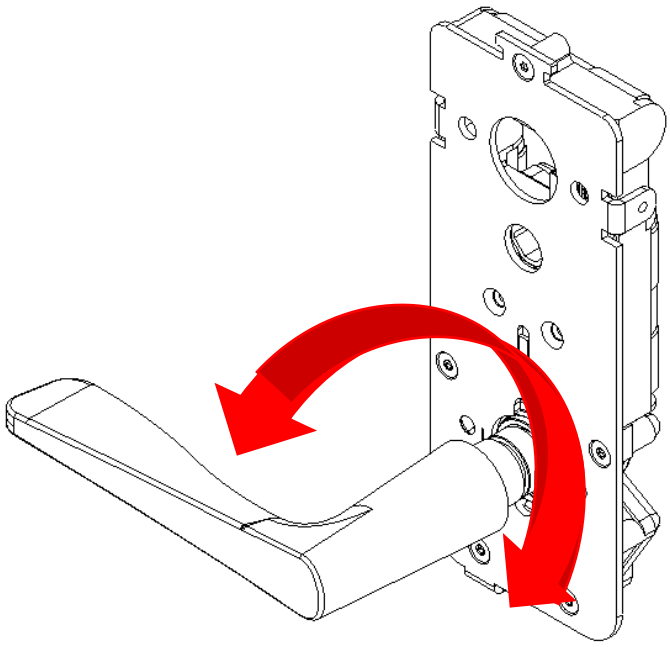

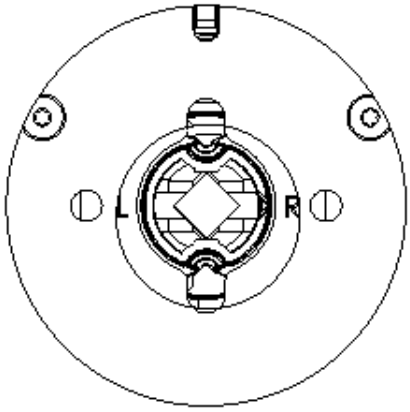

RH as arrow pointing R

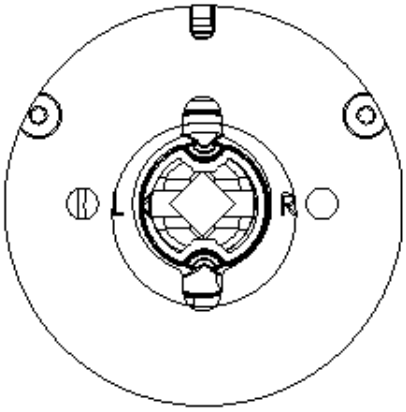

LH as arrow pointing L

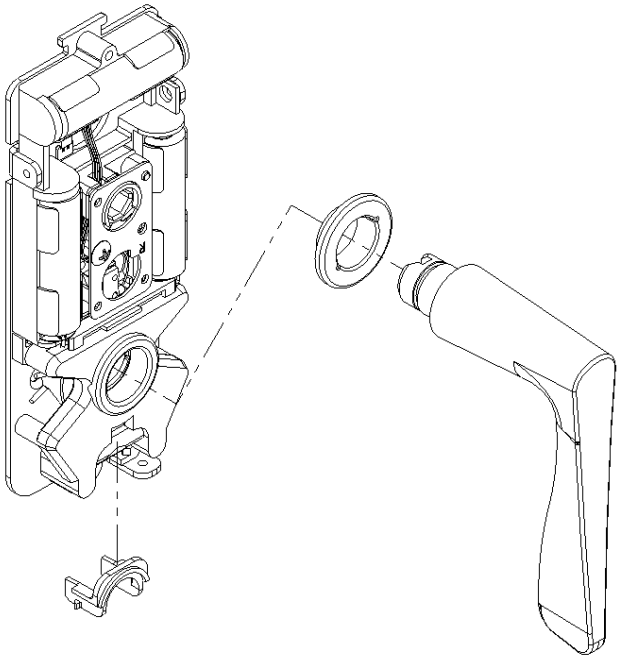

- Install the bushing (item 7)
- Install the lever vertically as shown (pointing down), making sure it is snug.
- Rotate the lever handle to horizontal position corresponding to selected handing.
- Push up the spring holder and install the snap holder for spring holder (item 8) to lock and prevent lever from disengaging

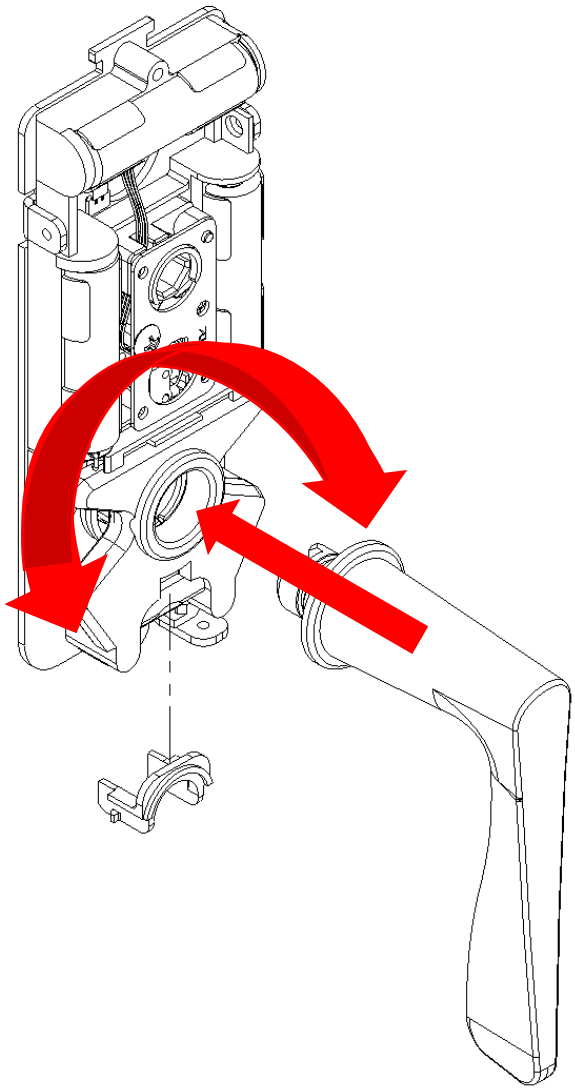

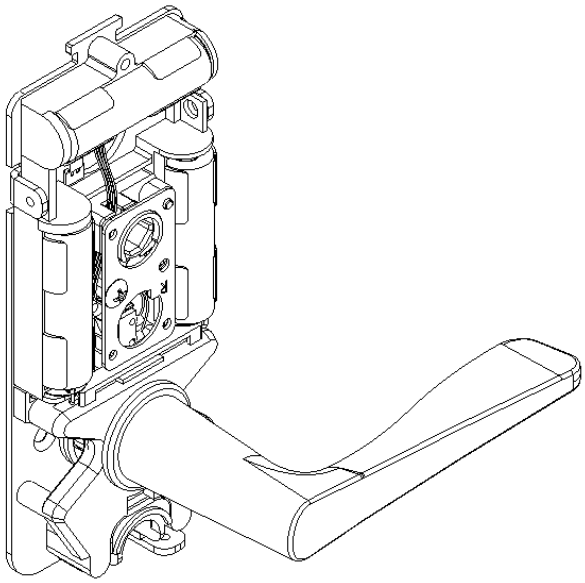

8. Installing the locking mechanism on the door

Before starting the installation of the lock on the door, please make sure the door has been prepared properly with proper holes for the lock. Refer to corresponding drilling template for your lock model. Drilling templates are available in the center section of this installation instructions and on the dormakaba website.

8.1. Installing the mortise ASM (if lock equipped)

Before installing the mortise, verify gap between the door and the frame. The gap between the mortise face plate and the strike must not exceed ¼" for proper and secure operation of the mortise.

IMPORTANT

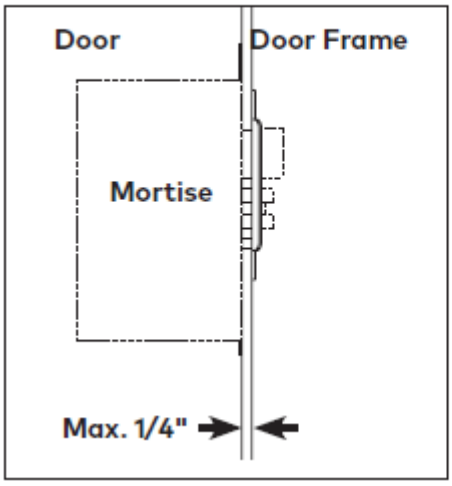

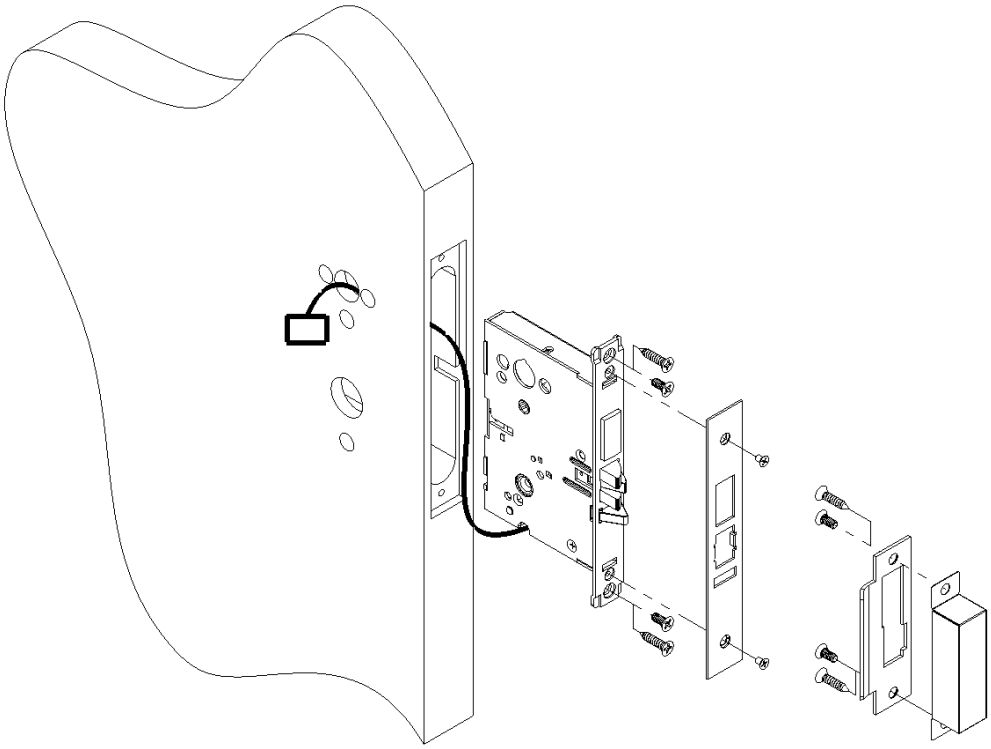

- Verify the mortise handing for LH or RH. If the handing needs to be adjusted, refer to instructions in annex A.
- Remove the face plate by removing the two screws

- Insert the mortise in the side of the door. If the mortise is equipped with a cable, route the cable so it comes out of top hole on the side of the inside trim assembly.
- Use metal or wood screws depending door material to secure the mortise

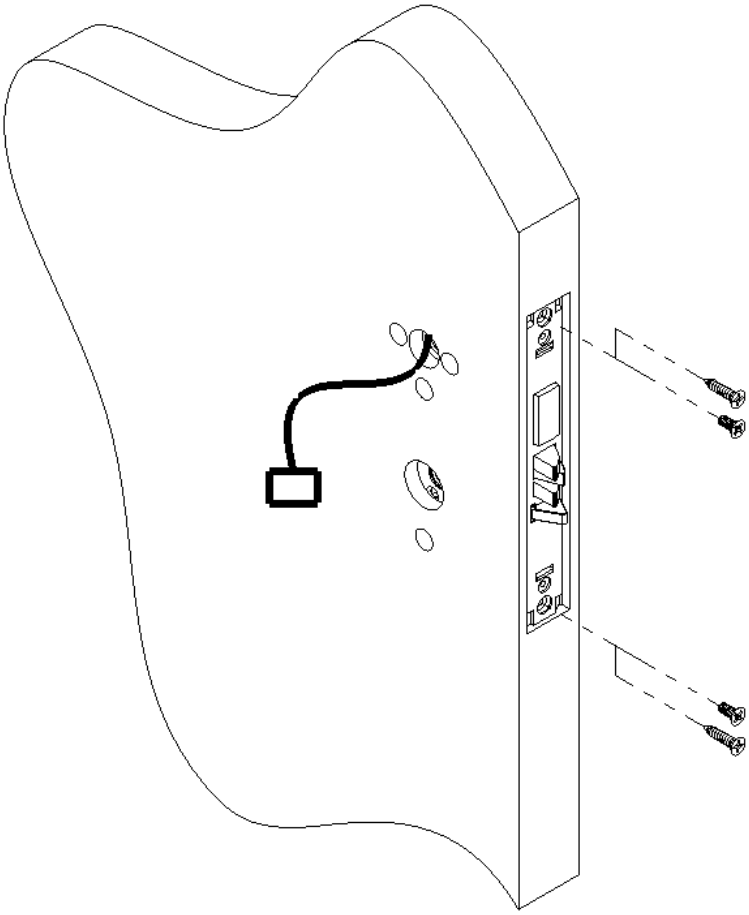

- Re-install the face plate with its two screws.

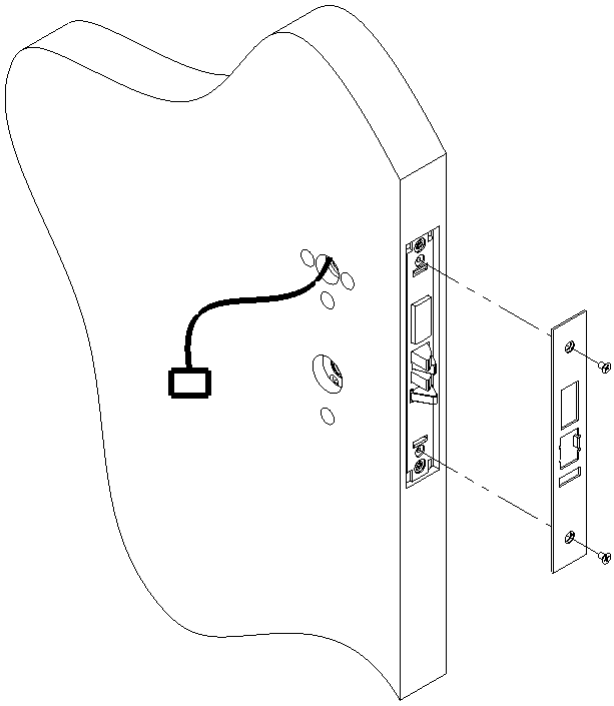

- Install the strike and the dust box on the door frame

  Important: When strike is installed on wood frames under one inch thick, wood screws supplied are not adequate. Use screws of efficient lenght to engage the structural stud behind the frame. Use only the strike and dust box supplied. Use of non-approved parts may void the warranty.

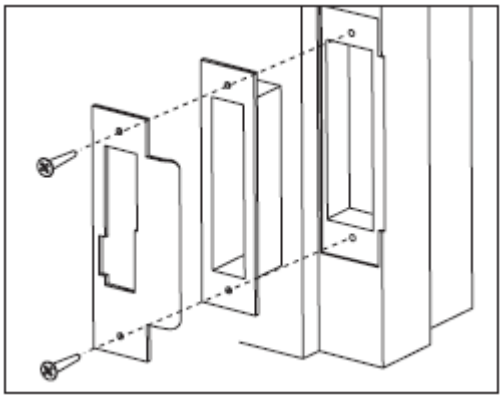

8.2. Installing the cylindrical models (if lock equipped)

IMPORTANT

For cylindrical latch models, ensure the dead-locking pin will stop against the strike when the door is closed (see figure). An incorrect installation that permits

the pin to slip inside the strike may result in a total lockout and will void the warranty of the complete lock mechanism.

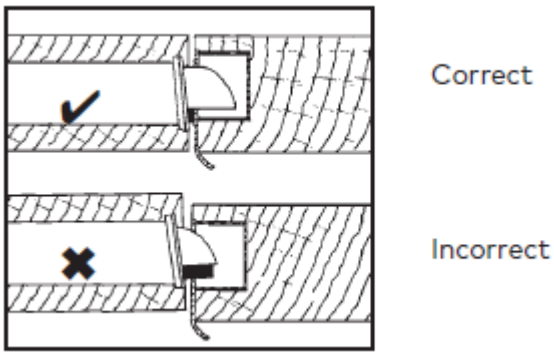

- Insert the latch in the hole in the edge of the door, orienting them latch bolt head as per closing direction
- Tighten the two screws.

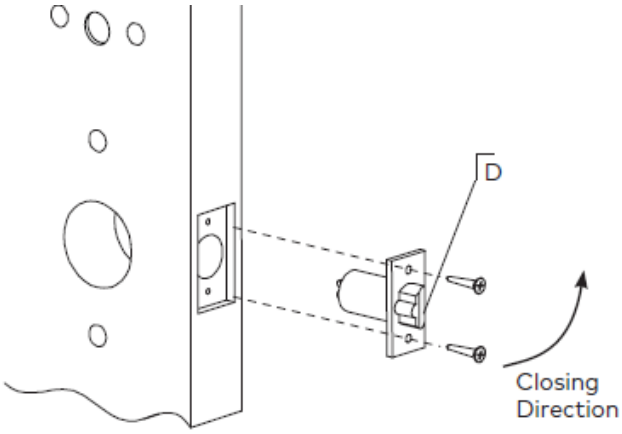

- Verify the door thickness. The lock is assembled in factory for door thickness of 1 ¾". If the door thickness is different, refer to table below to adjust the spacers. Extra spacers and screws provided in the hardware bag.

Door Thickness Table 2

Door Thickness	Spacer 07	Spacer 08	Screw 06
1-3/8" (35mm) to 1-9/16" (40mm)	2	-	3/8 (10mm)
1-5/8" (41mm) to 1-11/16" (43mm)	1	1	1/2 (13mm)
1-3/4" (44mm) to 1-13/16" (46mm)	2	1	5/8 (16mm)
1-7/8" (48mm) to 1-15/16" (49mm)	-	2	5/8 (16mm)
2" (51mm) to 2-1/16" (52.5mm)	1	2	3/4 (19mm)
2-1/8" (54mm) to 2-3/16" (56mm)	2	2	3/4 (19mm)
2-1/4" (57mm) to 2-5/16" (59mm)	-	3	7/8 (22mm)
2-3/8" (60mm) to 2-1/2" (64mm)	1	3	7/8 (22mm)

Fig.3

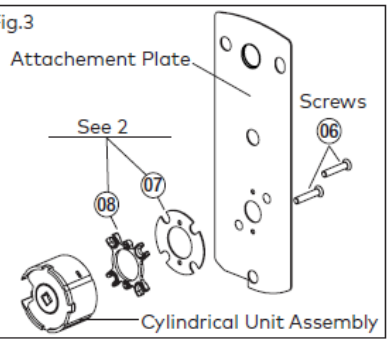

Fig. 4 Screw Length (Full Scale)

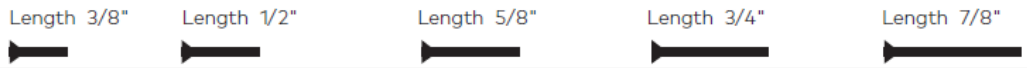

- Make sure the handing is correct. If not, reinstall the cylindrical unit for proper handing.

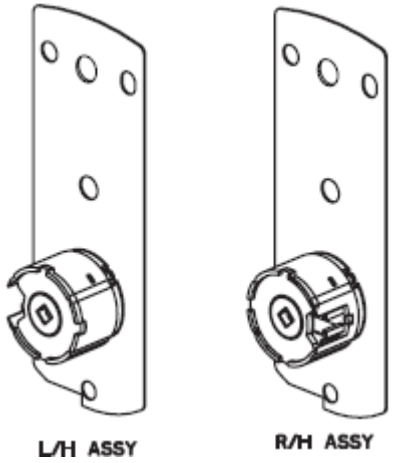

- Install the cylindrical unit from outside of the door toward inside, so that it engages the latch as shown.

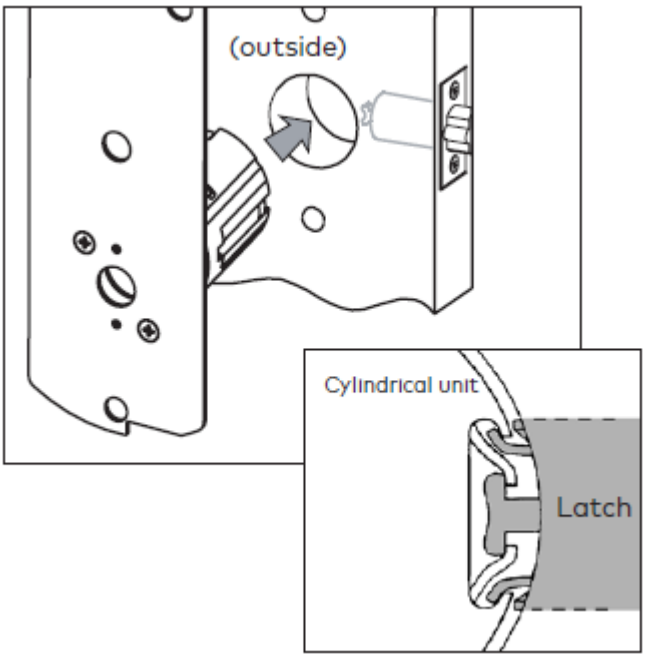

- Install the strike and the dust box on the door frame
  Important: Use only the strike and strike box supplied. The use of non-approved parts will result in a functionality problem and may void the warranty.

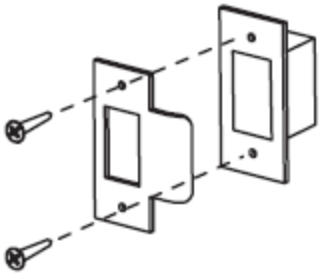

9. Installing the lock housings on the door

Install the housing on the inside of the door and aligning with the lock mechanism.

- Install the front lock housing, routing the wire cable by the center hole at the top
- Install the inside housing
- Install the screws provided and tighten

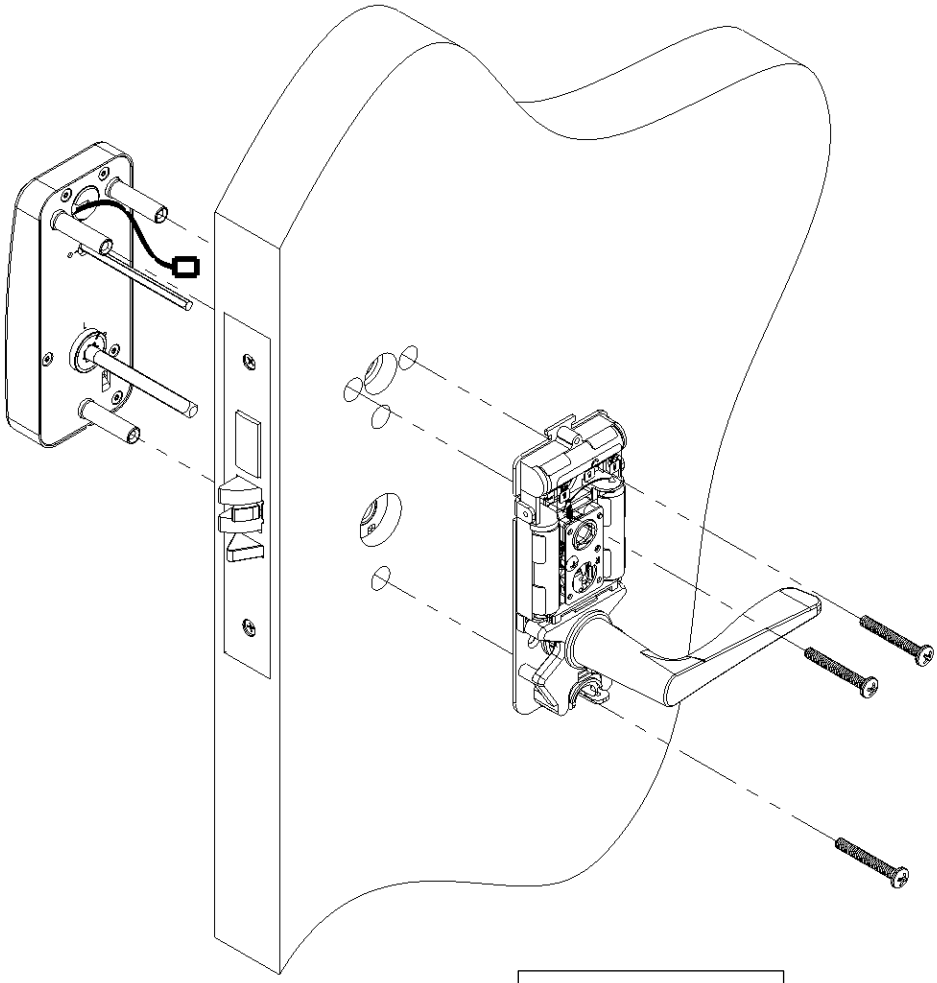

LH shown

10. Installing the antenna module (if lock equipped)

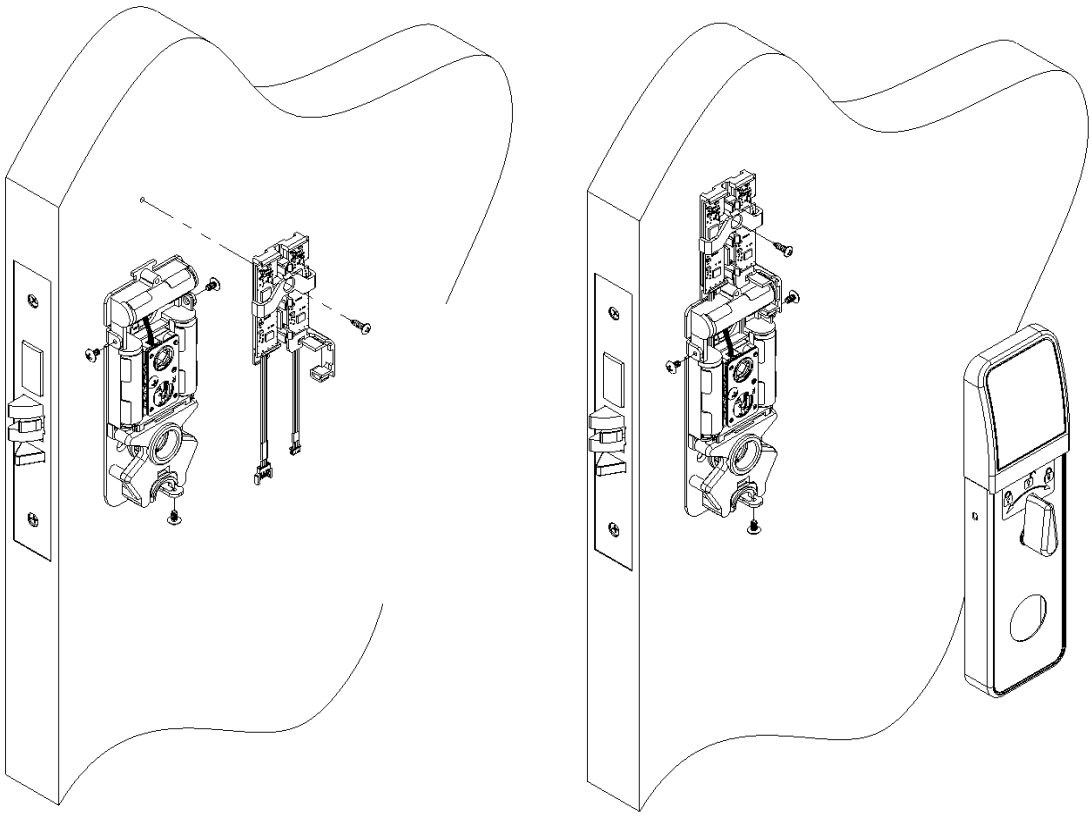

- Position the bracket on the door, engaged with the "T" at the top of the chassis
- Secure the bracket with screw

11. Connecting the cables

Locks without wire guide

- Connect each cable with its mating one and push back in the hole in the door the excess of cables.

Locks with wire guide

- Before installing the lock on the door, extend the wire guide out, without removing the cover.

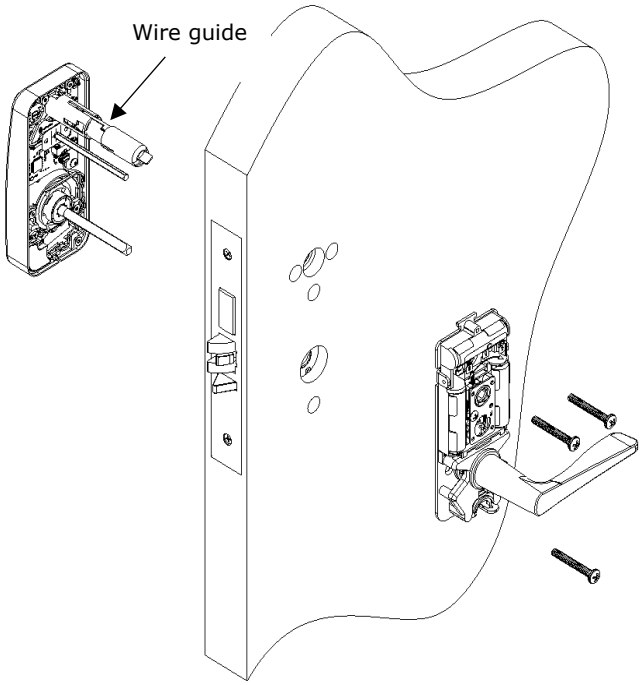

- After securing the front lock housing with the inside trim chassis, remove the cover on the wire cover. The cover will no longer be used.

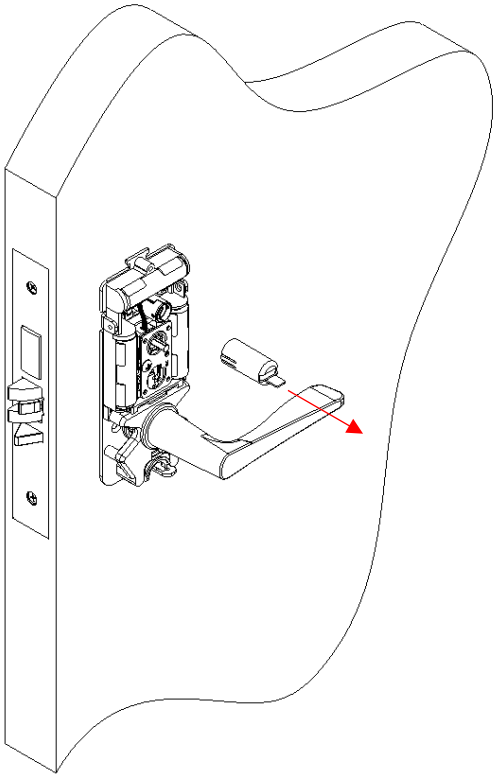

- Now that cables are exposed, connect each cable with its mating one.
- Push back the wire guide in the door.

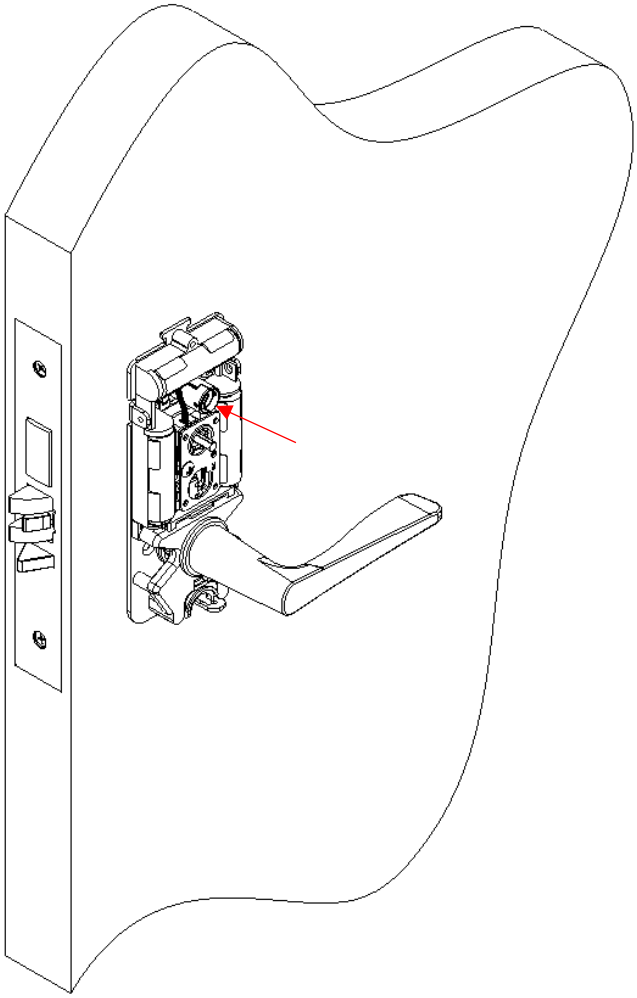

12. *Installating inside cover*

- Set the thumb turn on the inside cover to vertical position
- Slide the inside cover onto the lever handle taking care not to scratch the lever handle
- When the cover is fully in place, secure it using the 3 screws (item 5)

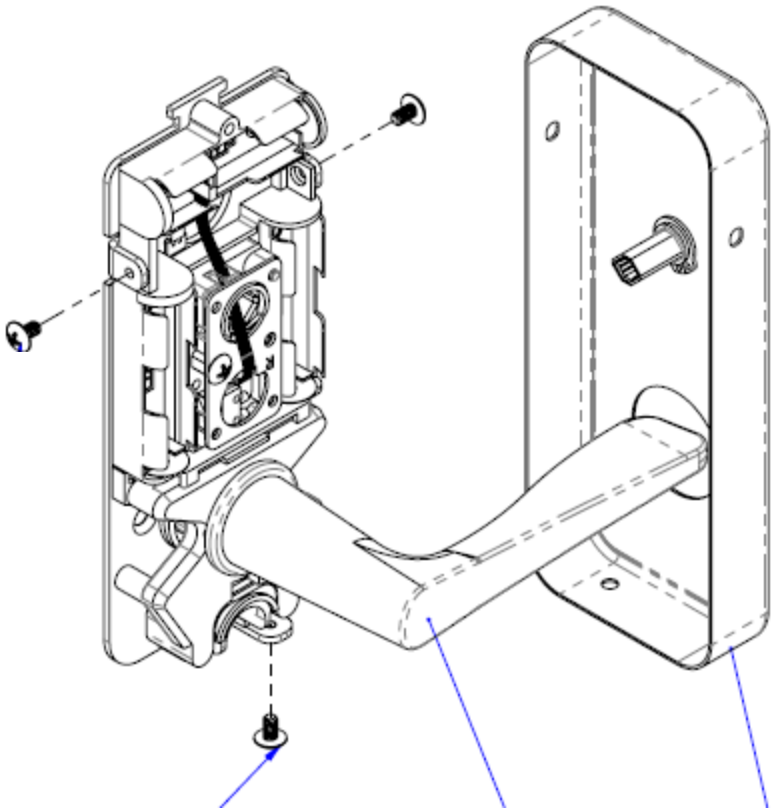

- For locks with ADB mortise, to apply the privacy thumb turn sticker.

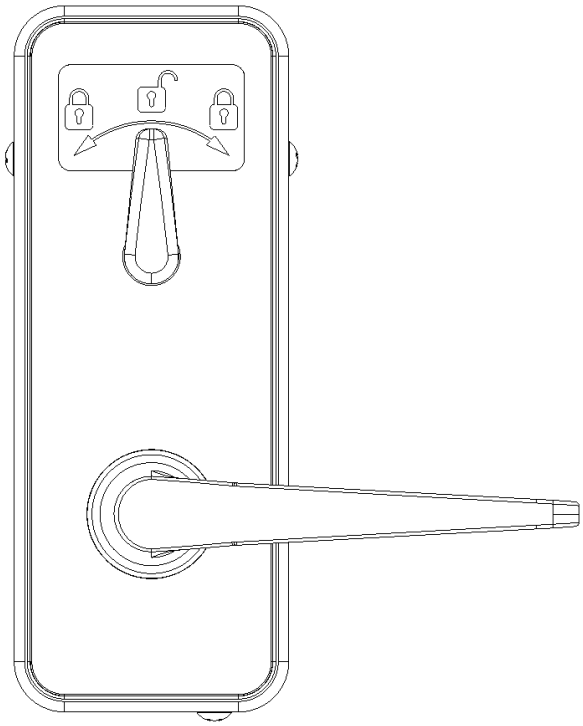

13. Installing the outside lever handle

- Install the outside bushing, making sure it is snug
- Install the outside lever handle according to the lock handing (L/R)
- Insert the set screw and tighten till snug

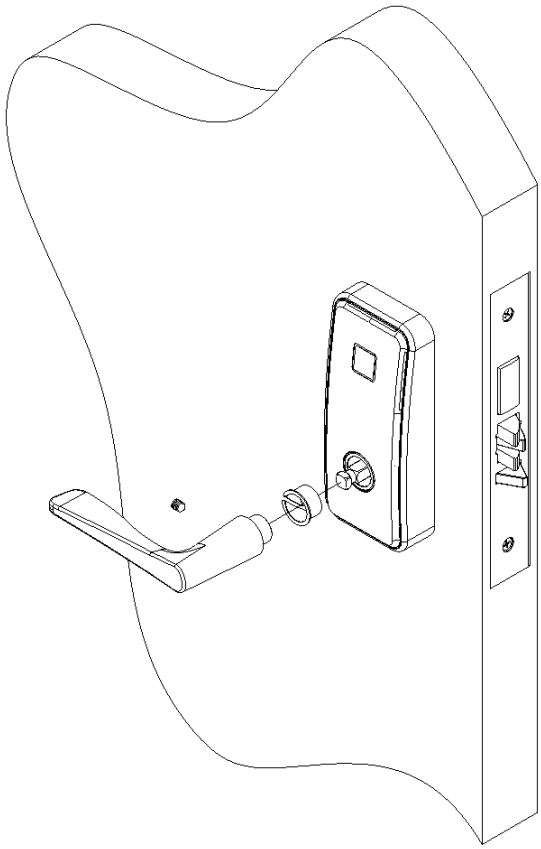

14. Install the batteries

- Insert the batteries in the battery holder respecting the polarity indicated in the battery holder

IMPORTANT: Use only Alkaline batteries

15. Test lock functionality

Make sure room door is open before testing

A - Present Test Keycard
B - Check Green & Red Lights Flash
C - Rotate Outside Lever to Check Bolt Retraction
D - Release Outside Lever, Should Move Freely
E - Rotate Inside Lever to Check Bolt Retraction
F - Check Bolt Projection from Thumbturn

16. Program the lock

Refer to system user manual for lock programming.

1.2 Reversible ASM

1. Remove the mortise faceplate. Remove screw (V) and lock washer (W) if applicable and **place the mortise on a flat surface for the following steps**.

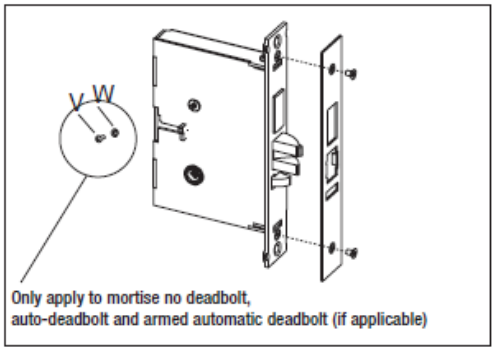

2. Partially extend the deadbolt:

For normal ASM, rotate hub (H) using a screwdriver, until the deadbolt (D) extends approximately 1/4".

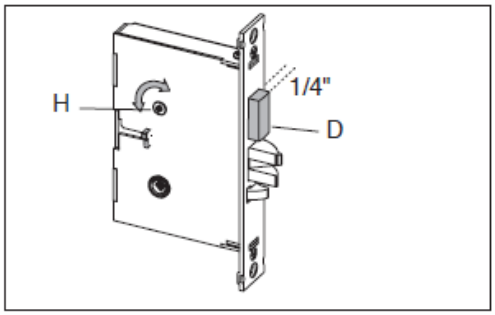

Proceed to step 3.

For Autodeadbolt ASM, rotate hub (H) until the deadbolt (D) is fully retracted. The deadbolt will extend approx. 1/16" from the mortise case.

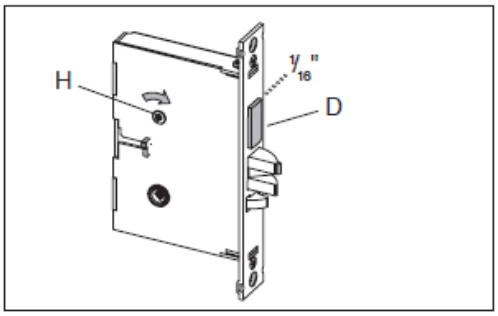

Hold deadbolt (D) gently. Press and release the auxiliary latch (X). You should feel the deadbolt trigger and begin to extend under the force of the spring.

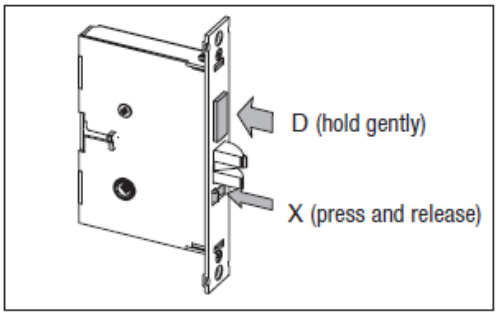

Release the deadbolt (D) gently. It should extend to 5/16" approx. and stop. If the deadbolt extends past this point, gently press it in until it locks at 5/16" throw, or start step 2 again.

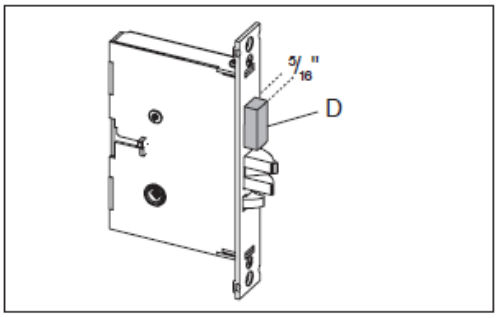

Reversible ASM (continued)

3. Push in the latch bolt (L) to the middle of its stroke, and hold it there. (Continue Step 1 and 2)

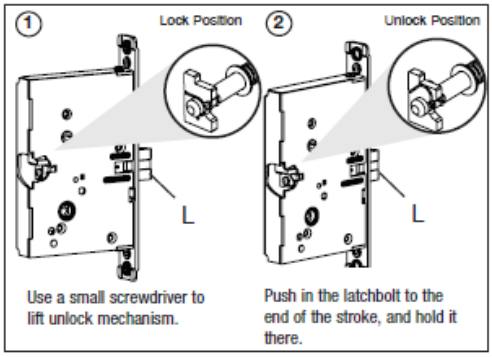

Hold the latch (L) inside the mortise, and insert the tailpiece retaining tool (S, part #027-510382 available separately) so that the tailpiece (T) will not drop inside the mortise case. Hold the tool and the latch with one hand, and slide up the tailpiece using a small screwdriver.

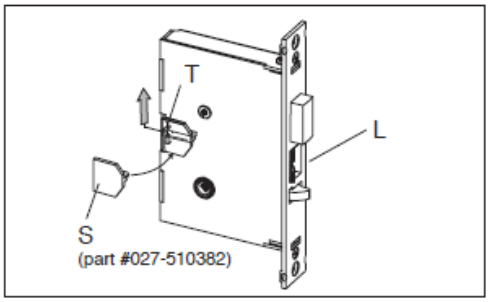

Continue to hold tool (S). Release the latch bolt (L) and keep the anti-friction latch (F) toward the flat side of the latch bolt so that the bolt extends fully.

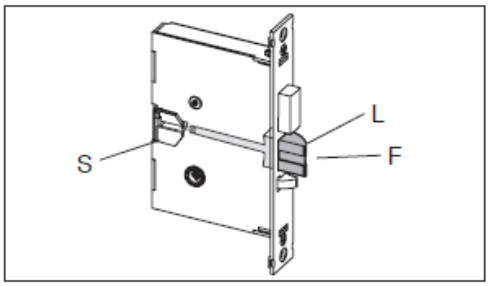

4. Pull out the latch bolt (L), until it just clears the front plate. (Note: If you remove the bolt completely, you must turn it 90° to re-insert it.)

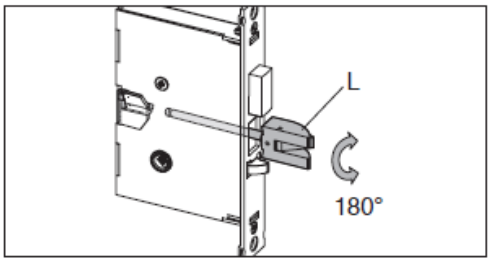

Rotate the latch bolt (L) 180°. Re-insert it to the end of its stroke.

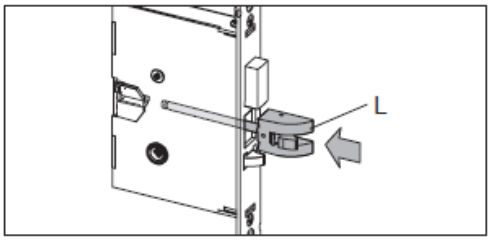

Holding tool (S) in place, re-engage tailpiece (T) with latch bolt (L) (slide tailpiece down). There may be some play required to align the parts. Remove the tool (S).

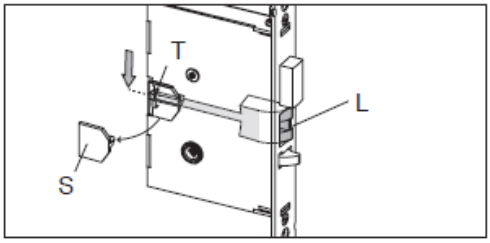

Release the latch to the middle of the stroke and hold it there. Use a small screwdriver to push the lock mechanism back on lock position (see step 1 and 2) .

Important: The lock mechanism has to be horizontal on lock position

5. Release the latch bolt (L). Position the latch bolt so that the bottom tooth of the anti-friction latch (F) remains inside the mortise case as shown.

> ⚠ **If the tooth of (F) is outside the mortise, you will not be able to re-assemble the faceplate on the mortise.**

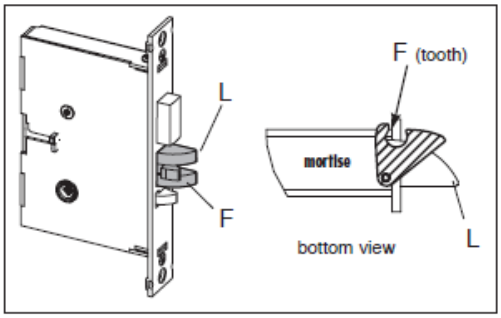

6. **If the auxiliary latch (X) is shaped like a triangle**, there is no need to change its handing.

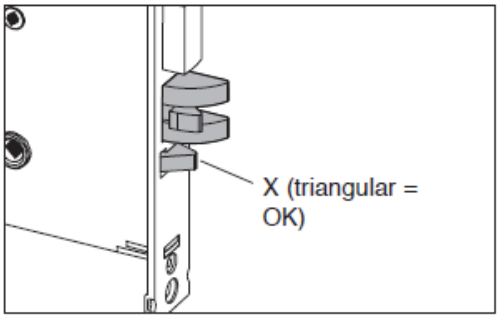

If the auxiliary latch (X) is a crescent shape, remove it, turn it 180°, and replace it. The auxiliary latch slides easily in and out of the mortise.

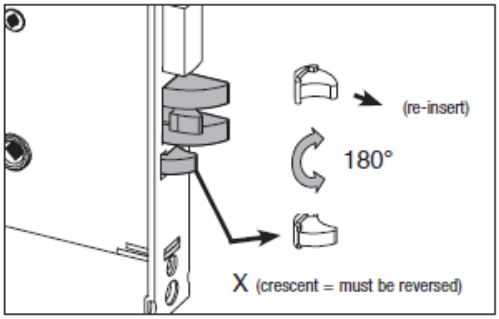

7. Assemble back screw (V) and lock washer (W) if applicable. The screw (V) must be tightened.

IMPORTANT: Screw (V) must not touch the back wall of mortise cut-out on the door

8. The mortise should look like the diagram below. (Check the orientation of the latch bolt and auxiliary latch.) Check the bevel of the mortise and change it if required as described in section 3.3, paragraph 6 page 8.

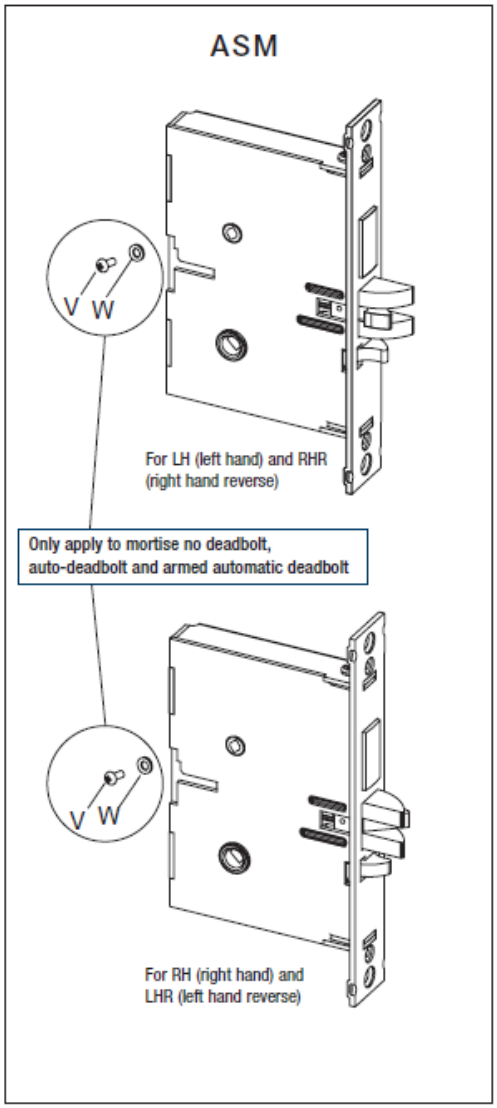
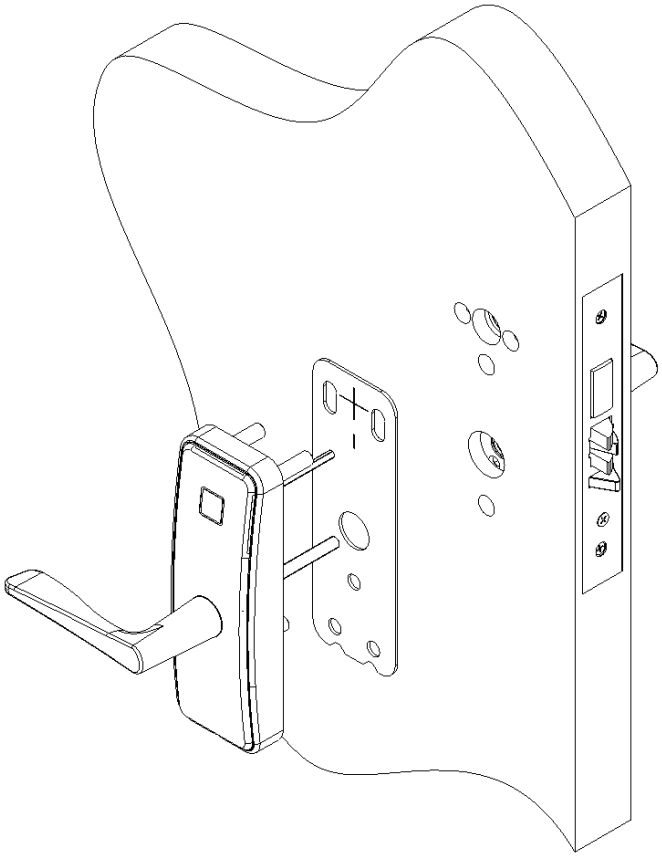
Annex B Install Outside Housing with Gasket