LINDSAY BROADBAND INC

SMHAP-AP274 Installation Guide

CONTENTS

I IMPORTANT SAFEGAURD & INSTALLATION WARNINGS

1. INSTALLATION
- 1.1 Pre-Installation
- 1.2 Site Selection
- 1.3 Power Requirements
- 1.4 Installation
- 1.5 Hanger Bracket Detail

2. PRODUCT DESCRIPTION
- 2.1 Introduction
- 2.2 General Description
- 2.3 Housing
- 2.4 HFC Interface
- 2.5 Block Diagram

3. COMPONENT IDENTIFICATION
- 3.1 Lid Component Identification Diagram
- 3.2 Base Component Identification Diagram

4. PRODUCT SPECIFICATIONS

5. REGULATORY NOTICES

Note: In this manual the term SMHAP refers to the SMHAP-AP274 only.

IMPORTANT SAFETY AND INSTALLATION WARNINGS

WARNING: DO NOT ATTEMPT TO SERVICE THIS PRODUCT YOURSELF AS OPENING OR REMOVING COVERS MAY EXPOSE YOU TO DANGEROUS VOLTAGES OR OTHER HAZARDS. REFER ALL SERVICING TO QUALIFIED SERVICE PERSONNEL.

MOUNTING:

Mount this product only as described in the installation instructions, otherwise it may fall causing serious personal injury and/or damage the unit. Use only with the brackets supplied with the product. Do not use attachments not recommended for this product as they may cause hazards.

SERVICING:

Remove power from this access controller and refer servicing to qualified personnel under the following conditions:

1. If the inside of the station has been exposed to rain or water.
2. If the station does not operate normally by following the operating instructions. Adjust only those controls that are covered by the operating instructions as an improper adjustment of the controls may result in damage and will often require extensive work by a qualified technician to restore the unit to its normal operation.
3. If the unit has been dropped or the chassis has been damaged.
4. If the unit exhibits a distinct change in performance.

REPLACEMENT PARTS:

When replacement parts are required, be sure the service technician has used replacement parts specified by the manufacturer or have the same characteristics as the original part. Unauthorized substitutions may result in fire, electric shock or other hazards.

SERVICE DEPOT:

Canada: Lindsay Broadband Inc.,
2035-2 Fisher Dr.
Peterborough, Ontario K9J 6X6
(705) 742-1350

Caution! Exposure to Radio Frequency Radiation

The antenna shall be placed in a manner that minimizes the potential for human contact during normal operation. To avoid the possibility of exceeding the FCC radio frequency exposure limits, human proximity to the antenna shall not be less than 20 cm (8 inches) during normal operation.

Prudence! L'exposition aux Rayonnements à Fréquence Radioélectrique

Pour respecter les limites FCC d'exposition aux fréquences radio (RF), les antennes doivent être placées à 20 cm (8 po) au moins de toute personne.

SECTION 1 INSTALLATION

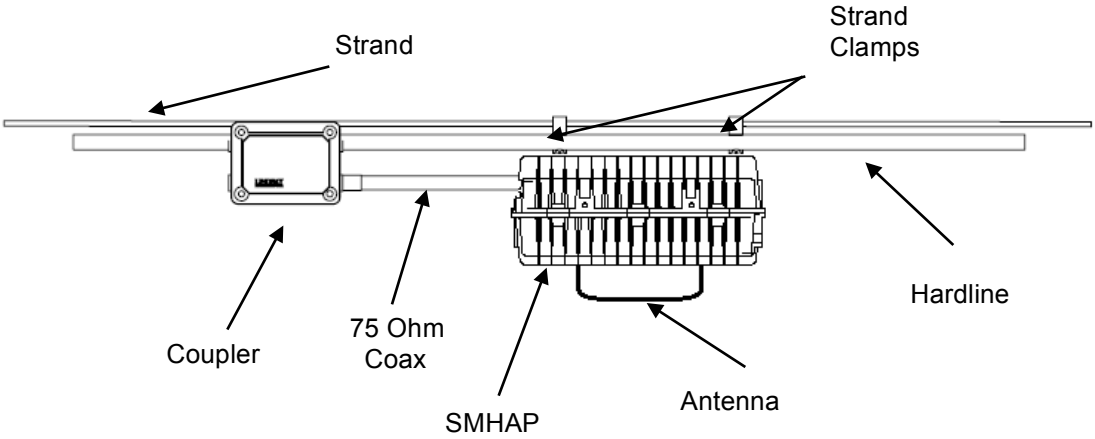

Installation Overview

1.1 Pre-Installation

Upon receipt of the access controller, inspect the carton for any external damage. If damage is present inspect the SMHAP exterior for damage. Report any apparent damage to the shipping agent and Lindsay Broadband sales office.

Pad values should be determined ahead of time. When calculating pad values allow for the loss of the internal HFC interface; 5dB in the forward direction and 4dB in the reverse direction. Forward levels at the modem should be 0 dBm. This is about 5 dBm at the input port. For best return path S/N, the reverse pad should be selected so as to have the cable modem operate near its maximum output level (-50 to -52 dBm). This will result in a level around 47dBm at the input port. The testpoint indicates levels 20 dB below those at the cable modem.

The cable modem can be provisioned ahead of time using the MAC address located on the label on the outside of the power lid

1.2 Site Selection

The SMHAP must be mounted so that it has an un-obstructed view of the target area. The SMHAP can obtain its power and RF connection from any nearby power passing tap, splitter, or coupler. The SMHAP can consume up to 37W of power.

1.3 Power Requirements

The SMHAP draws a maximum of 37 Watts. You can use the following formula to calculate the maximum current draw for your installation:

$$I = \frac{37}{V}$$

Where:

I = Current draw in Amps

V = Line Voltage in Volts

1.4 Installation

Installation of the SMHAP is similar to the installation of a line extender, or tap, or other piece of CATV equipment. Use the diagrams in this section as guide to the installation, and the diagrams in section 2 to help locate the components referred to in the following instructions.

1. Pull the AC interrupt in the power passing tap or coupler.
2. Mount the SMHAP in its final location. When installing the back mount hanger brackets, the existing strand clamps should be re-used to act as a thick washer allowing the same bolts to be used (See section 1.5).
3. Open the lid and replace the two 0 dB RF pads with pad values that were determined before entering the field.
4. Make a coaxial connection to the power-passing tap or coupler.
5. Re-install the AC interrupt. Indicator LEDS on the cable modem and radio should indicate startup and discovery of their respective networks. (Refer to the cable modem and access point installation guide for more information.)
6. The forward and reverse RF levels at the cable modem can be measured at the single test point. Readings are -20dB relative to the cable modem F connector. Make adjustments to pad values as required.
7. Silicone Grease can be applied to the exposed part of the O-ring before swinging the lid back into place. This will reduce any tendency of the O-ring to stick to the lid and ensure a weather-tight seal. To be clear, use Silicone Grease, not Silicone Sealant, nor any other type of Grease.
8. If the EMI gasket has any frayed or loose ends tuck them back into the channel and close the lid while ensuring that the wire harness does not interfere with the base and lid sealing surfaces.
9. Using a torque wrench with a 13mm socket, tighten the lid bolts gradually, alternating diagonally to avoid stress or warp on the housing sealing surfaces. The lid bolts should be tightened to the specified 17-ft LB or 24 Nm torque to ensure that the EMI specification is met. The required torque is easily met by using the box end of a combination wrench, but cannot be reached using a nut driver.
10. Tape all connections to reduce moisture intake.

1.5 Hanger Bracket Detail

Base Mounted Hanger Bracket (PN 2-246)

Note: Bracket is installed between housing and existing clamp.

SECTION 2 PRODUCT DESCRIPTION

2.1 Introduction

This section gives a full product description and a block diagram.

2.2 General Description

The SMHAP is an integrated, standards based, hardened solution for 802.11a/b/g/n/ac access to the HFC DOCSIS network. It can be connected to the HFC network through any power-passing tap, splitter, or coupler. This one-piece solution harbors a discrete cable modem and a discrete Aruba AP-274 access point. Each piece is configured separately. The cable modem is configured by your DOCSIS provisioning software. Consult Aruba's literature for assistance in configuring the AP

2.3 Housing

A rugged die cast aluminum housing of clamshell design is used. Externally, the housing base has Installation mounts, a type F -20dB test point connector. and a 5/8" threaded opening for KS type stinger pin connection to the HFC network

Internally, the housing base harbors the HFC interface board, the power supply, and the cable modem.

The access point and antenna diplex filter occupy the housing lid. A low-profile "stealth" antenna is attached to the lid.

Dual gaskets provide for EMI isolation and an airtight seal to 15psi. The housing can be strand mounted. An optional hardware kit for wall, mast or pedestal mounting is available.

The station size is approximately 11.5 x 8.5 x 5 inches (290 x 220 x 130 mm). Its weight is around 6.5 pounds (3Kg).

2.4 HFC Interface

The main circuit board, which is located in the housing base, provides the interface to the HFC network. The following features are provided:

1. An AC/RF filter is used to separate the AC power from the RF carriers.
2. Plug-in SVP type surge protection.
3. Sockets for the separate padding of forward and reverse signals.
4. Test point. 20dB coupling of forward and reverse power at the cable modem port.
5. A power director to disconnect power.

2.5 Block Diagram

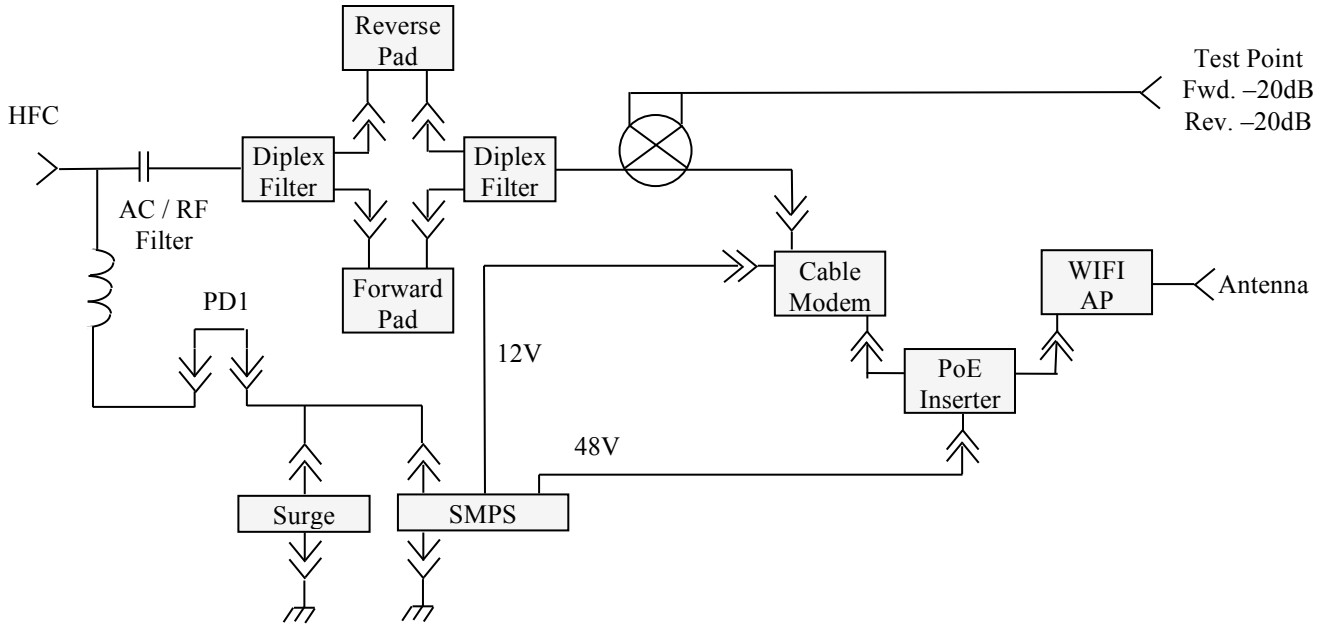

SECTION 3 COMPONENT IDENTIFICATION

3.1 Lid Component Identification Diagram

3.2 Base Component Identification Diagram

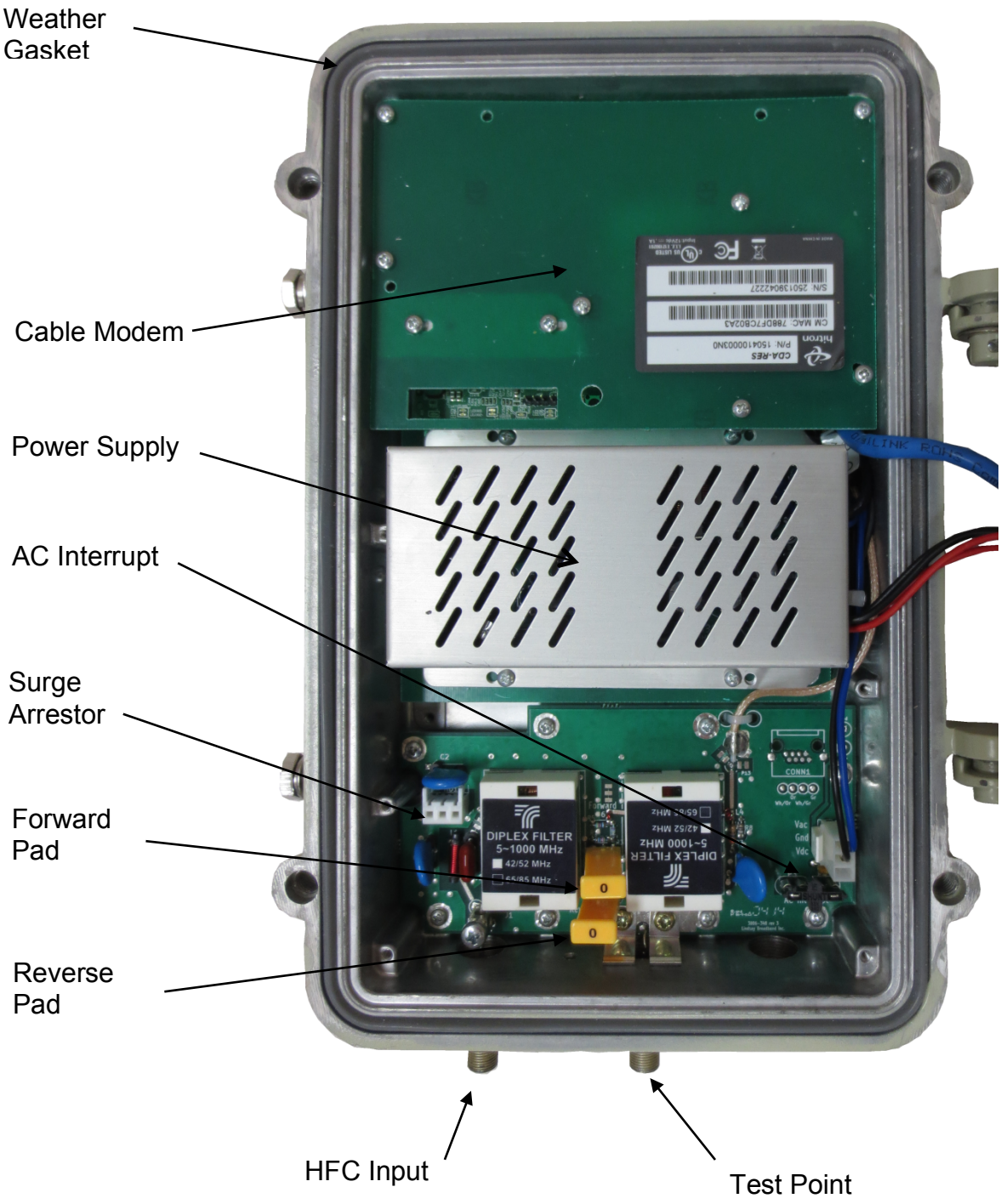

SECTION 4 PRODUCT SPECIFICATIONS

Lindsay SMHAP Specifications	
Included Modules	
Radio	Aruba AP274 (See next page)
Cable Modem	Arris SB6183 – See CM spec sheet.
HFC	
Test Point	-20dB relative to cable modem RF port
Pad Type	JXP, Separate Forward and Reverse
Temperature Range	-40 to +60 Deg C
EMI Isolation	100 dB (5 to 1000 MHz)
Surge Withstand (HFC)	ANSI-IEEE C62.41 Category B3 (6KV)
Powering	60 / 90 Vac (Pseudo Sine)
Power Consumption	37 W
Physical	
Dimensions (excluding antenna)	290 x 220 x 130 mm (11.5 x 8.5 x 5 in.)
Weight	3 Kg (6.5 lbs.)
Installation	Strand, Mast, Wall, Pole, Pedestal
Housing Material	Die cast Aluminum Alloy
Salt Air Protection	Chromated and Painted
Airtight	IP68; 15 p.s.i.
Certifications	
Radio (see spec sheet for full list)	FCC Part 15 Certification Industry Canada RSS Certification
Cable Modem (see spec sheet for full list)	DOCSIS 3.0 Certified

AP-274 Specifications	
Wireless	
AP Type	Outdoor, dual radio, 5-GHz 802.11ac and 2.4-GHz 802.11n, each with 3x3 MIMO
Frequency Bands (Country specific restrictions apply)	2.4000 GHz to 2.4835 GHz 5.150 GHz to 5.250 GHz 5.250 GHz to 5.350 GHz 5.470 GHz to 5.725 GHz 5.725 GHz to 5.875 GHz
Max Throughput	54 Mbps (802.11a/g) 450 Mbps (802.11n) 1300 Mbps (802.11ac)
Maximum Transmit Power	28 dBm (23 dBm per chain)
Receive Sensitivity	-95 dBm @ 1 Mbps -75 dBm @ 54 Mbps -61 dBm @ 1300 Mbps
Dynamic Frequency Selection	Yes
Spectrum Analysis Mode	Yes
Explicit transmit beam-forming	Yes
“ClientMatch” Real Time Steering	Yes
Wireless Intrusion Protection	Yes
Advanced Cellular Coexistence	Yes
Certifications	
Certifications	Wi-Fi Alliance 802.11a/b/g/n/ac
Regulatory	FCC/Industry Canada, CE marked, R&TTE Directive 1995/5/EC, Low Voltage Directive 72/23/EEC, EN 300 328, EN 301 489, EN 301 893, UL/IEC/EN 60950, EN 60601-1-1, EN60601-1-2

RF performance numbers are slightly lower due to additional internal RF circuitry.

SECTION 4 REGULATORY NOTICES

Industry Canada Notice for Licence-Exempt Radio Apparatus:

This device complies with Industry Canada's licence-exempt RSSs. Operation is subject to the following two conditions:

(1) This device may not cause interference; and

(2) This device must accept any interference, including interference that may cause undesired operation of the device.

Le présent appareil est conforme aux CNR d'Industrie Canada applicables aux appareils radio exempts de licence. L'exploitation est autorisée aux deux conditions suivantes :

(1) l'appareil ne doit pas produire de brouillage;

(2) l'utilisateur de l'appareil doit accepter tout brouillage radioélectrique subi, même si le brouillage est susceptible d'en compromettre le fonctionnement.

FCC Class B Part 15:

This device complies with Part 15 of the Federal Communications Commission (FCC) Rules. Operation is subject to the following two conditions:

- This device may not cause harmful interference.
- This device must accept any interference received, including interference that may cause undesired operation.

This equipment has been tested and found to comply with the limits for a Class B digital device, pursuant to Part 15 of the FCC Rules. This equipment generates, uses and can radiate radio frequency energy and, if not installed and used in accordance with the manufacturer's instructions, may cause interference harmful to radio communications.

If this equipment does cause interference, which can be determined by turning the equipment off and on, the user is encouraged to try to correct the interference by one or more of the following measures:

- Reorient or relocate the receiving antenna.
- Increase the separation between the equipment and receiver.
- Connect the equipment to an outlet on a circuit different from that to which the receiver is connected.
- Consult the dealer or an experienced radio or TV technician for help.

Warning: The FCC Regulations state that any unauthorized changes or modifications to this equipment not expressly approved by the manufacturer could void the user's authority to operate this equipment.