Aruba 360 Series Outdoor Access Points

Installation Guide

The Aruba 360 Series outdoor wireless access points support IEEE 802.11ac standards for high-performance WLAN, and are equipped with two radios, which provide network access and monitor the network simultaneously. Multiple-in, Multiple-out (MIMO) technology allows these access points to deliver high-performance 802.11n 2.4 GHz and 802.11ac 5 GHz functionality, while also supporting 802.11a/b/g wireless services.

The AP-365 and AP-367 access points work in conjunction with an Aruba controller, while the IAP-365 and IAP-367 access points can be configured using a built-in virtual controller.

The 360 Series outdoor wireless access points provide the following capabilities:

- IEEE 802.11a/b/g/n/ac operation as a wireless access point
- IEEE 802.11a/b/g/n/ac operation as a wireless air monitor
- IEEE 802.11a/b/g/n/ac spectrum monitor
- Compatible with IEEE 802.3af PoE
- Centralized management configuration and upgrade
- Integrated Bluetooth Low Energy (BLE) Radio

CAUTION

This device must be professionally installed and serviced by a trained ACMP or similar Aruba-certified technician. Aruba access points are classified as radio transmission devices, and are subject to government regulations of the host country. The network administrator(s) is/are responsible for ensuring that configuration and operation of this equipment is in compliance with their country's regulations. For complete list of approved channels in your country of the AP-365 and AP-367 access points, refer to the *Aruba Downloadable Regulatory Table* at support.arubanetworks.com.

Package Contents

- 360 Series access point
- Cable Gland x 1
- USB Console Cable x 1
- Copper Lug x 1
- M4x6 Screw x1
- Aruba Regulatory Compliance and Safety Information Guide
- Aruba Instant Quick Start Guide (for IAP-365 and IAP-367 only)
- Aruba 360 Series Outdoor Access Point Installation Guide (this document)

NOTE

Mounting kits for use with the 360 Series access points are sold separately. Contact your Aruba sales representative for details.

NOTE

Inform your supplier if there are any incorrect, missing, or damaged parts. If possible, retain the carton, including the original packing materials. Use these materials to repack and return the unit to the supplier if needed.

Hardware Overview

Figure 1 *360 Series Access Point*

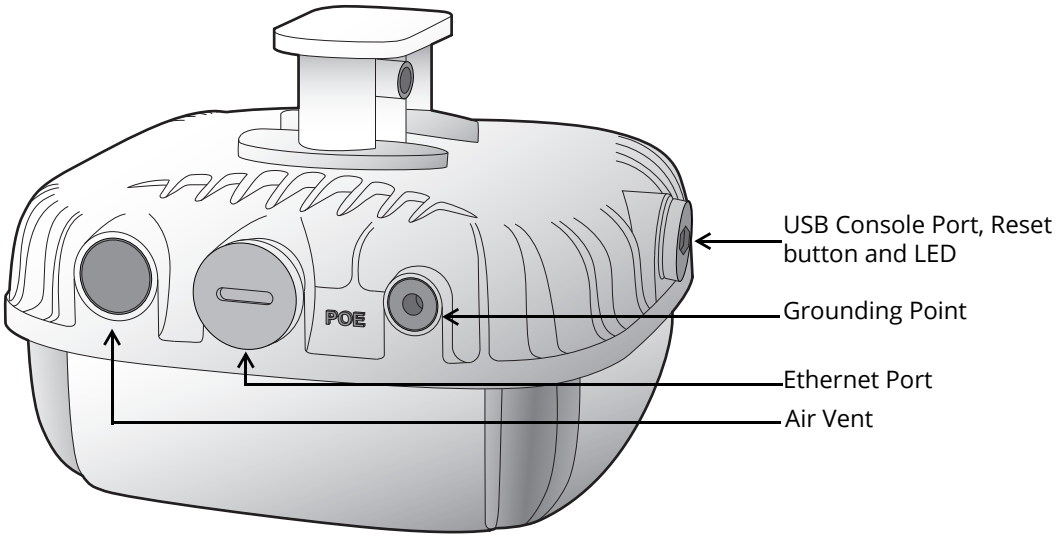

LED

The 360 Series access point is equipped with one LED that indicates the system status of the device. This LED can be configured via ArubaOS (for AP-365 and AP-367) or Aruba Instant (for IAP-365 and IAP-367) software into three separate modes:

- Normal mode (by default): See Table 1
- Off mode: LED is off
- Blink mode: LED blinks green (synchronized)

Table 1 *360 Series LED Status during Boot Up*

LED	Color/State	Meaning
System LED	Off	No power to AP
	Red	Initial power-up
	Green - Flashing	AP booting
	Green - Steady	AP ready and 1000Mbps Ethernet link established. The LED turns off after 1200 seconds
	Green - Yellow, 6 seconds period	AP ready and 10/100Mbps Ethernet link established. The LED turns off after 1200 seconds

Table 2 *360 Series LED Status during Operation*

LED	Color/State	Meaning
System LED	Solid Red	General fault
	One blink off every 3 seconds	Radio 0 fault (5 GHz)
	Two quick blink off 0.5 seconds apart cycled every 3 seconds	Radio 1 fault (2.4GHz)

USB Console Port

The USB Micro-B console port allows you to connect the AP to a terminal or a laptop for direct local management. Use the included USB console cable to connect the AP. You can download the

necessary driver for USB-UART adapter from support.arubanetworks.com under the **Tools & Resources** tab.

Use the following setting to access the terminal:

Table 3 *Console Settings*

Baud Rate	Data Bits	Parity	Stop Bits	Flow Control
9600	8	None	1	None

Reset Button

To reset the 360 Series access points to factory default settings, press and hold down the reset button using a small, narrow object such as a paper clip while the device is powered on.

Ethernet Ports

360 Series access point is equipped with one 10/100/1000Base-T auto-sensing MDI/MDX Ethernet port. This port supports wired-network connectivity, in addition to Power over Ethernet (PoE) from IEEE 802.3af compliant power sources.This device accepts 57V DC (802.3af) nominal as a standard powered device (PD) from power sourcing equipment, including PoE midspan injector or a PoE-sourcing network infrastructure.

The port has an RJ-45 female connectors with the pin-out shown in Figure 2.

Figure 2 *Gigabit Ethernet Port Pin-Out*

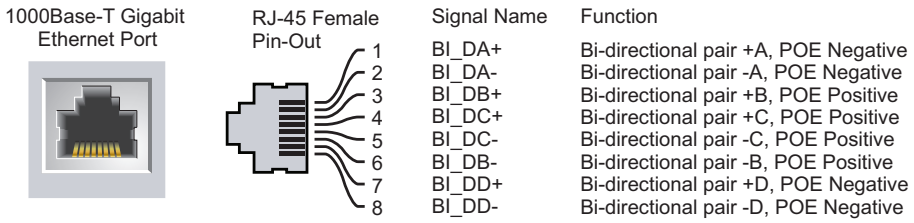

Grounding Point

Always remember to protect the access point by installing grounding lines. The ground connection must be complete before connecting power to the access point enclosure.

Before You Begin

CAUTION

FCC Statement: Improper termination of access points installed in the United States configured to non-US model controllers will be in violation of the FCC grant of equipment authorization. Any such willful or intentional violation may result in a requirement by the FCC for immediate termination of operation and may be subject to forfeiture (47 CFR 1.80).

EU Statement:
Lower power radio LAN product operating in 2.4 GHz and 5 GHz bands. Please refer to the ArubaOS User Guide/Aruba Instant User Guide for details on restrictions.

CAUTION

Produit réseau local radio basse puissance operant dans la bande fréquence 2.4 GHz et 5 GHz. Merci de vous referrer au ArubaOS User Guide/Aruba Instant User Guide pour les details des restrictions.

Low Power FunkLAN Produkt, das im 2.4 GHz und im 5 GHz Band arbeitet. Weitere Informationen bezlüglich Einschränkungen finden Sie im ArubaOS User Guide/Aruba Instant User Guide.

Apparati Radio LAN a bassa Potenza, operanti a 2.4 GHz e 5 GHz. Fare riferimento alla ArubaOS User Guide/Aruba Instant User Guide per avere informazioni detagliate sulle restrizioni.

Pre-Installation Network Requirements

NOTE

The instructions for this section are applicable to the AP-365 and AP-367 only.

After WLAN planning is complete and the appropriate products and their placement have been determined, the Aruba controller(s) must be installed and initial setup performed before the Aruba access points are deployed.

For initial setup of the controller, refer to the *ArubaOS Quick Start Guide* for the software version installed on your controller.

Pre-Installation Checklist

Before installing your 360 Series access points, be sure that you have the items listed below:

- Cat5E UTP or better cable of required length
- 802.3af-compliant PoE source

For AP-365 and AP-367 only:

- Aruba Mobility Controller provisioned on the network:
  - Layer 2/3 network connectivity to your access point
- One of the following network services:
  - Aruba Discovery Protocol (ADP)
  - DNS server with an “A” record
  - DHCP Server with vendor-specific options

NOTE

Aruba Networks, Inc. in compliance with governmental requirements, has designed the 360 Series access points so that only authorized network administrators can change the settings. For more information about access point configuration, refer to the ArubaOS Quick Start Guide/Aruba Instant Quick Start Guide and ArubaOS User Guide/Aruba Instant User Guide.

Verifying Pre-Installation Connectivity

NOTE

The instructions for this section are applicable to the AP-365 and AP-367 only.

Before installing access points in a network environment, make sure that they are able to locate and connect to the controller after power on.

Specifically, you must verify the following conditions:

- When connected to the network, each access point is assigned a valid IP address.
- Access points are able to locate the controller.

Refer to the *ArubaOS Quick Start Guide* for instructions on locating and connecting to the controller.

Outdoor Planning and Deployment Considerations

Prior to deploying an outdoor wireless network, the environment must be evaluated to plan for a successful Aruba WLAN deployment. Successfully evaluating the environment enables the proper selection of Aruba routers and antennas and assists in the determination of their placement for optimal RF coverage. This process is considered WLAN or RF planning and Aruba's system engineers can assist in the outdoor planning process.

For **WLAN systems being installed outdoors in the USA,** the following requirements must be met.

1. Systems must be **professionally installed** by a qualified engineer familiar with WLAN, including Aruba trained partners and resellers.
2. Operation in the 5600-5650-MHz band is prohibited.
3. When within 35 km distance of a TDWR, the center frequency of the WLAN must be separated from the TDWR center frequency by 30 MHz.
   a. If the radar is operating from 5600-5610 MHz, disable the use of channel 116 (5580 MHz).
   b. If the radar is operating from 5630-5650 MHz, disable the use of channel 132 (5660 MHz).

For TWDR locations in the US please refer to www.wispa.org/tdwr-locations-and-frequencies.

Identifying Specific Installation Locations

You can mount the 360 Series access point on a wall or pole. Use the access point placement map generated by Aruba's RF Plan software application to determine the proper installation location(s). Each location should be as close as possible to the center of the intended coverage area and should be free from obstructions or obvious sources of interference. These RF absorbers/reflectors/interference sources will impact RF propagation and should have been accounted for during the planning phase and adjusted for in RF plan.

Identifying Known RF Absorbers/Reflectors/Interference Sources

Identifying known RF absorbers, reflectors, and interference sources while in the field during the installation phase is critical. Make sure that these sources are taken into consideration when you attach an AP to its fixed location. Examples of sources that degrade RF performance include:

- Cement and brick
- Objects that contain water
- Metal
- Microwave ovens
- Wireless phones and headsets

Installing the Access Point

NOTE

Service to all Aruba products should be performed by an AMCP certified technician or similar.

Using the Mounting Kits

The 360 Series can be installed on a wall or attached to a pole by using applicable mounting kits. The AP-365/IAP-365 access point is equipped with built-in omni-directional antennas which are optimized for horizontal mounted orientation of the 365 access point. The AP-367/IAP-367 access point is equipped with built-in directional antennas which are optimized for vertical mounted orientation of the 367 access point.

Table 4 *Applicable Mounting Kits for 360 Series*

Part Number	Description	Applicable for AP-365/IAP-365?	Applicable for AP-367/IAP-367?
AP-270-MNT-V1	Long mount kit for wall and vertical pole mounting, 300 mm from vertical mounting asset.	Yes	No
AP-270-MNT-V2	Short mount kit for wall and vertical pole mounting, 75 mm from vertical mounting asset.	Yes	No
AP-270-MNT-H1	Hanging mount kit for hanging from inclined or horizontal structure.	Yes	Yes
AP-270-MNT-H2	Flush mount kit for wall and ceiling mounting.	Yes	Yes

NOTE

The 360 Series access point does not ship with any mounting kits. These mounting kits are available as accessories and must be ordered separately.

NOTE

For installation instructions on AP-270-MNT-V1, AP-270-MNT-V2, AP-270-MNT-H1 and AP-270-MNT-H2, please refer to the AP-270-MNT-V1 Installation Guide, AP-270-MNT-V2 Installation Guide, AP-270-MNT-H1 Installation Guide and AP-270-MNT-H2 Installation Guide respectively.

Grounding the AP

The grounding must be completed before powering up the access point. The grounding wire should be #8 AWG.

1. Peel the cover of one end of the grounding wire and place the bare grounding wire into the included copper lug, and press firmly with the crimping pliers.
2. Fasten the copper lug to the grounding hole on the AP with the included M4 x6 screw.

Connecting the Ethernet Cable

To connect the Ethernet cable to the access point, perform the following steps using the cable gland that ships with your access point.

WARNING

Failure to use the included Ethernet cable gland can lead to connectivity and POE issues.

NOTE

The cable is not included and must be purchased separately. Purchase a suitable UV-resistant, outdoor rated, CAT 5E or better RJ45 cable for use with the access point.

Figure 3 *Installing the Cable Gland*

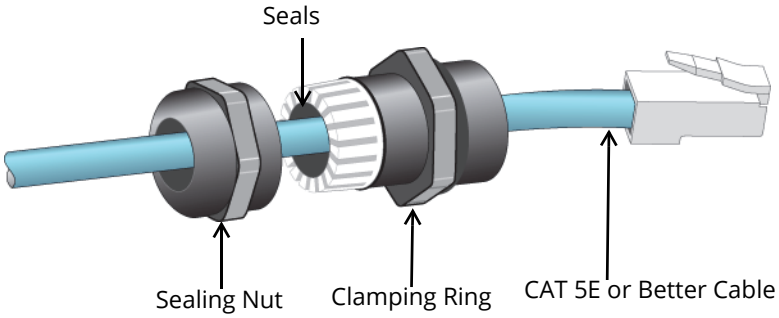

1. Slide the sealing nut over the cable (without the RJ45 connector attached to the end).
2. Slide the clamping ring over the cable.
3. Using a crimping tool, attach the shielded RJ45 connector to the end of the cable.
4. Remove the weatherproof cap on the Ethernet port.
5. Insert the RJ45 connector to the Ethernet port.
6. Screw the clamping ring onto the Ethernet port.
7. Screw the sealing nut onto the clamping ring.

NOTE

The seals inside the clamping ring by factory default is applicable for cables with 5-8.5 mm diameter. In the cable gland kit, another seals is provided for use with the cables with 7-10 mm diameter.

Verifying Post-Installation Connectivity

The integrated LED on the AP can be used to verify that the access point is receiving power and initializing successfully (see | and |). Refer to the ArubaOS Quick Start Guide for further details on verifying post-installation network connectivity.

Configuring the Access Point

NOTE

The instructions for this section are applicable to the AP-365 and AP-367 only.

Access Point Provisioning/Reprovisioning

Provisioning parameters are unique to each access point. These local access point parameters are initially configured on the controller which are then pushed out to the AP and stored on the AP itself. Aruba recommends that provisioning settings be configured via the ArubaOS Web UI only. Refer to the *ArubaOS User Guide* for complete details.

Access Point Configuration

Configuration parameters are network or controller specific and are configured and stored on the controller. Network configuration settings are pushed out to the AP(s) but remain stored on the controller.

Configuration settings can be configured via the ArubaOS Web UI or ArubaOS CLI. Refer to the ArubaOS User Guide for complete details.

Contacting Aruba Networks

Website Support	
Main Site	arubanetworks.com
Support Site	support.arubanetworks.com
Airheads Social Forums and Knowledge Base	community.arubanetworks.com
North American Telephone	1-800-943-4526 (Toll Free) 1-408-754-1200
International Telephones	arubanetworks.com/support-services/contact-support/
Software Licensing Site	licensing.arubanetworks.com/
End of Support Information	arubanetworks.com/support-services/end-of-life-products/end-of-life-policy/
Security Incident Response Team (SIRT)	arubanetworks.com/support-service/security-bulletins/
Support Email Addresses	
Americas, EMEA, and APAC	support@arubanetworks.com
Security Incident Response Team (SIRT)	sirt@arubanetworks.com

Open Source Code

This product includes code licensed under the GNU General Public License, the GNU Lesser General Public License, and/or certain other open source licenses. A complete machine-readable copy of the source code corresponding to such code is available upon request. This offer is valid to anyone in receipt of this information and shall expire three years following the date of the final distribution of this product version by Hewlett Packard Enterprise Company. To obtain such source code, send a check or money order in the amount of US $10.00 to:

Hewlett Packard Enterprise Company
Attn: General Counsel
3000 Hanover Street
Palo Alto, CA 94304
USA

Warranty

This hardware product is protected by an Aruba warranty. For details, see Aruba Networks standard warranty terms and conditions.

© Copyright 2016 Hewlett Packard Enterprise Development LP

a Hewlett Packard Enterprise company

www.arubanetworks.com

1344 Crossman Avenue
Sunnyvale, California 94089

Phone: 408.227.4500
Fax 408.227.4550

Aruba 360 Series Outdoor Access Point

Regulatory Compliance and Safety Information Guide

Introduction

This document contains domestic and international regulatory compliance and safety information for the access point. To ensure that this device complies with the regulatory standards for your region, please refer to the sections below.

- Electrical and Environmental Specifications
- Regulatory Information
- Proper Disposal of Aruba Equipment

Electrical and Environmental Specifications

For additional specifications on this product, please refer to the product data sheet at www.arubanetworks.com.

CAUTION

All Aruba access points should be professionally installed by an Aruba Certified Mobility Professional (ACMP). The installer is responsible for ensuring that grounding is available and meets applicable national and electrical codes.

CAUTION

Tous les points d'accès Aruba doivent impérativement être installés par un professionnel agréé. Ce dernier doit s'assurer que l'appareil est mis à la terre et que le circuit de mise à la terre est conforme aux codes électriques nationaux en vigueur.

Electrical

- Ethernet:
  - One 10/100/1000 Base-T auto-sensing Ethernet interface (RJ-45)
- Power:
  - Maximum (worst-case) power consumption: 12.95W (802.3af PoE)
  - Power over Ethernet (PoE): 802.3af complaint source
  - Connect only to IEC 60950-1 or IEC 60601-1 3rd edition products and power sources.

Environmental

- Operating:
  - Temperature: -40°C to +50°C (-40°F to +122°F)
  - Humidity: 5% to 93% non-condensing
- Storage and transport
  - Temperature: -40°C to +70°C (-40°F to +158°F)

Regulatory Information

The following regulatory model names apply to the 360 Series access points:

- AP-365/IAP-365: APEX0365
- AP-367/IAP-367: APEX0367

Aruba provides a multi-language document that contains country-specific restrictions and additional safety and regulatory information for all Aruba access points. This document can be viewed or downloaded from the following location: www.arubanetworks.com/safety_addendum.

FCC

This device is electronically labeled.

To view the FCC ID for controller-managed access points:

1. Log into the controller WebUI
2. Navigate to **Maintenance > Controller > About**

To view the FCC ID for Instant access points:

1. Log into the virtual controller WebUI
2. Navigate to **Maintenance > About**

RF Radiation Exposure Statement: This equipment complies with FCC RF radiation exposure limits. This equipment must be installed and operated in accordance with provided instructions and the antenna(s) used for this transmitter must be installed to provide a separation distance of at least 20cm from all persions and must not be co-located or operating in conjunction with any other antenna or transmitter. End-users and installers must be provided with antenna installation instructions and transmitter operating conditions for satisfying RF exposure compliance.

Déclaration sur les limites d'exposition aux radiofréquences : cet équipement est conforme aux limites d'exposition aux rayonnements radioélectriques spécifiées par la FCC. Il doit être installé et utilisé à une distance minimale de 20 cm par rapport à votre corps pour les fréquences de 2,4 et 5 GHz. Cet émetteur-récepteur ne doit pas être utilisé ou situé à proximité d'autres antennes ou émetteurs-récepteurs.

The device could automatically discontinue transmission in case of absence of information to transmit, or operational failure. Note that this is not intended to prohibit transmission of control or signaling information or the use of repetitive codes where required by the technology.

Any changes or modifications not expressly approved by the grantee of this device could void the user's authority to operate this equipment.

Toute modification effectuée sur cet équipement sans l'autorisation expresse de la partie responsable de la conformité est susceptible d'annuler son droit d'utilisation.

FCC Class B Part 15

This equipment has been tested and found to comply with the limits for a Class B digital device, pursuant to Part 15 of the FCC Rules. These limits are designed to provide reasonable protection against harmful interference in a residential installation. This equipment generates, uses and can radiate radio frequency energy and, if not installed and used in accordance with the manufacturer's instructions, may cause harmful interference to radio communications.

However, there is no guarantee that interference will not occur in a particular installation. If this equipment does cause harmful interference to radio or television reception, which can be determined by turning the equipment off and on, the user is encouraged to try to correct the interference by one or more of the following measures:

- Reorient or relocate the receiving antenna.
- Increase the separation between the equipment and receiver.
- Connect the equipment to an outlet on a circuit different from that to which the receiver is connected.
- Consult the dealer or an experienced radio or TV technician for help.

Industry Canada

This device complies with Industry Canada license-exempt RSS standard(s).

Operation is subject to the following two conditions: (1) this device may not cause interference, and (2) this device must accept any interference, including interference that may cause undesired operation of the device.

Déclaration d'Industrie Canada

Le présent appareil est conforme aux CNR d'Industrie Canada applicables aux appareils radio exempts de licence. L'exploitation est autorisée aux deux conditions suivantes : (1) l'appareil ne doit pas produire de brouillage, et (2) l'utilisateur de l'appareil doit accepter tout brouillage radioélectrique subi, même si le brouillage est susceptible d'en compromettre le fonctionnement.

CAUTION

This equipment complies with IC radiation exposure limits set forth for an uncontrolled environment. This equipment should be installed and operated with minimum distance 20 cm between the radiator and your body.

CAUTION

Cet équipement est conforme aux limites d'exposition aux rayonnements IC établies pour un environnement non contrôlé. Cet équipement doit être installé et utilisé avec un minimum de 20 cm de distance entre la source de rayonnement et votre corps.

CAUTION

(i) For devices with detachable antenna(s), the maximum antenna gain permitted for devices in the band 5725-5850 MHz shall be such that the equipment still complies with the e.i.r.p. limits specified for point-to-point and non-point-to-point operation as appropriate; and
(ii) Users should also be advised that high power radars are allocated as primary users (i.e. priority users) of the bands 5650-5850MHz and that these radars could cause interference and/or damage to LE-LAN devices.

CAUTION

(i) pour les dispositifs munis d'antennes amovibles, le gain maximal d'antenne permis (pour les dispositifs utilisant la bande de 5 725 à 5 850 MHz) doit être conforme à la limite de la p.i.r.e. spécifiée pour l'exploitation point à point et l'exploitation non point à point, selon le cas;
(ii) Les utilisateurs devraient aussi être avisés, d'une part, que les utilisateurs de radars de haute puissance sont désignés utilisateurs principaux (c.-à-d., qu'ils ont la priorité) des bandes de 5 650 à 5 850 MHz et, d'autre part, que ces radars pourraient causer du brouillage et/ou des dommages aux dispositifs de RL-EL.

CAUTION

This radio transmitter (IC: 4675A-APEX0365367) has been approved by Industry Canada to operate with the antenna types listed below with the maximum permissible gain indicated. Antenna types not included in this list, having a gain greater than the maximum gain indicated for that type, are strictly prohibited for use with this device.

CAUTION

Le présent émetteur radio (IC: 4675A-APEX0365367) a été approuvé par Industrie Canada pour fonctionner avec les types d'antenne énumérés ci dessous et ayant un gain admissible maximal. Les types d'antenne non inclus dans cette liste, et dont le gain est supérieur au gain maximal indiqué, sont strictement interdits pour l'exploitation de l'émetteur.

EU Regulatory Conformance

Aruba Networks Inc., hereby declares that the 320 Series Wireless Access Points are in compliance with directives listed below:

- EMC Directive 2014
- Low Voltage Directive 2014
- R&TTE Directive 1999
- REACH Regulation (EC) No.: 1907/2006
- RoHS Directive 2011
- WEEE Directive 2012

A Declaration of Conformity for these directives is available for viewing at www.arubanetworks.com.

EMC Class B Warning

이 기기는 가정용 (B 급) 전자파적합기기로서 주로 가정에서 사용하는 것을 목적으로 하며 , 모든 지역에서 사용할 수 있습니다 .

RF Warning

해당무선설비는 전파혼신의 가능성이 있으므로 인명안전과 관련된 서비스는 할 수 없습니다

Medical

1. Equipment not suitable for use in the presence of flammable mixtures.
2. Connect to only IEC 60950-1 or IEC 60601-1 3rd edition certified products and power sources. The end user is responsible for the resulting medical system complies with the requirements of IEC 60601-1 3rd edition.
3. Wipe with a dry cloth, no additional maintenance required.
4. No serviceable parts, the unit must be sent back to the manufacturer for repair.
5. No modifications are allowed without Aruba approval.

第十二條

經型式認證合格之低功率射頻電機，非經許可，公司、商號或使用者均不得擅自變更頻率、加大功率或變更原設計之特性及功能。

第十四條

低功率射頻電機之使用不得影響飛航安全及干擾合法通信；經發現有干擾現象時，應立即停用，並改善至無干擾時方得繼續使用。

前項合法通信，指依電信法規定作業之無線電通信。

低功率射頻電機須忍受合法通信或工業、科學及醫療用電波輻射性電 機設備之干擾。

NOTE

Expected Service Life 10 years. For additional compliance information, refer to the label on the side of this device.

Proper Disposal of Aruba Equipment

Dispose of Aruba products per local regulation. For the most current information about Global Environmental Compliance and Aruba products, see our website at www.arubanetworks.com.

Waste of Electrical and Electronic Equipment

Aruba products at end of life are subject to separate collection and treatment in the EU Member States, Norway, and Switzerland and therefore are marked with the symbol shown at the left (crossed-out wheelie bin). The treatment applied at end of life of these products in these countries shall comply with the applicable national laws of countries implementing Directive 2002/96EC on Waste of Electrical and Electronic Equipment (WEEE).

India RoHS

This product complies with RoHS requirements as prescribed by E-Waste (Management & Handling) Rules, governed by the Ministry of Environment & Forests, Government of India.

European Union RoHS

Aruba products also comply with the EU Restriction of Hazardous Substances Directive 2011/65/EC (RoHS). EU RoHS restricts the use of specific hazardous materials in the manufacture of electrical and electronic equipment. Specifically, restricted materials under the RoHS Directive are Lead (including Solder used in printed circuit assemblies), Cadmium, Mercury, Hexavalent Chromium, and Bromine. Some Aruba products are subject to the exemptions listed in RoHS Directive Annex 7 (Lead in solder used in printed circuit assemblies). Products and packaging will be marked with the “RoHS” label shown at the left indicating conformance to this directive.

China RoHS

Aruba products also comply with China environmental declaration requirements and are labeled with the “EFUP 10” label shown at the left.

有毒有害物质声明

Hazardous Materials Declaration

部件名称 (Parts)	有毒有害物质或元素（Hazardous Substance）					
	铅（Pb）	汞（Hg）	镉（Cd）	六价铬（Cr^{6+}）	多溴联苯（PBB）	多溴二苯醚（PBDE）
电路模块 (circuit modules)	X	O	O	O	O	O
电缆及电缆组件 (Cables & Cable Assemblies)	O	O	O	O	O	O
金属部件 (Metal Parts)	O	O	O	O	O	O
塑料和聚合物部件 (Plastic and Polymeric Parts)	O	O	O	O	O	O

O: 表示该有毒有害物质在该部件所有均质材料中的含量均在 SJ/T11363-2006 标准规定的限量要求以下。Indicates that the concentration of the hazardous substance in all homogeneous materials in the parts is below the relevant threshold of the SJ/T11363-2006 standard.

X: 表示该有毒有害物质至少在该部件的某一均质材料中的含量超出 SJ/T11363-2006 标准规定的限量要求。Indicates that the concentration of the hazardous substance of at least one of all homogeneous materials in the parts is above the relevant threshold of the SJ/T11363-2006 standard.

对销售之日的所售产品，本表显示供应链的电子信息产品可能包含这些物质。

This table shows where these substances may be found in the supply chain of electronic information products, as of the date of sale of the enclosed product.

此标志为针对所涉及产品的环保使用期标志. 某些零部件会有一个不同的环保使用期(例如,电池单元模块)贴在其产品上.

此环保使用期限只适用于产品是在产品手册中所规定的条件下工作.

The Environment- Friendly Use Period (EFUP) for all enclosed products and their parts are per the symbol shown here. The Environment- Friendly Use Period is valid only when the product is operated under the conditions defined in the product manual.

© Copyright 2016 Hewlett Packard Enterprise Development LP

a Hewlett Packard Enterprise company

www.arubanetworks.com

Phone: 408.227.4500
Fax: 408.227.4550