Aruba 387 Series Outdoor Access Points

Installation Guide

The Aruba 387 Series access points are equipped with two radios (a 5GHz 802.11ac radio and a 60GHz 802.11ad radio), delivering high performance with the MU-MIMO (Multi-User Multiple-Input, Multiple-Output) technology, supporting 802.11a/n/ac/ad wireless services. The 387 Series access point can be deployed in either a controller-based (ArubaOS) or controller-less (InstantOS) deployment mode.

Guide Overview

- "Hardware Overview" on page 2 provides a detailed hardware overview of the 387 Series access points.
- "Before You Begin" on page 4 provides key questions to ask and items to consider when deploying an outdoor wireless network.
- "Installing the Access Point" on page 6 describes the multi-step process for a successful installation and deployment of the 387 Series access points.
- "Safety and Regulatory Compliance" on page 8 provides an overview of safety and regulatory compliance information.

Package Contents

- 387 Series access point
- USB console cable x1
- Cable gland x1
- Ground stud bolt and washer x1

NOTE

The weatherproof caps for Ethernet and Console interfaces are connected to the access point, not loose in the package.

NOTE

Mounting kits for use with the 387 Series access points are sold separately. Contact your Aruba sales representative for details.

NOTE

Inform your supplier if there are any incorrect, missing, or damaged parts. If possible, retain the carton, including the original packing materials. Use these materials to repack and return the unit to the supplier if needed.

Hardware Overview

Figure 1 *AP-387 Front View*

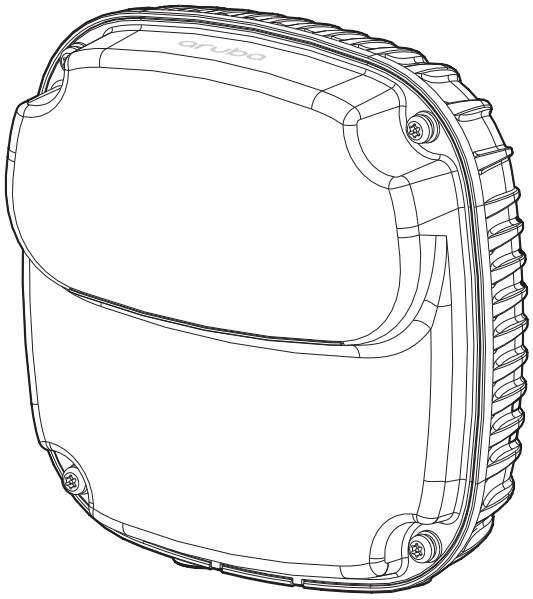

Figure 2 *AP-387 Back View*

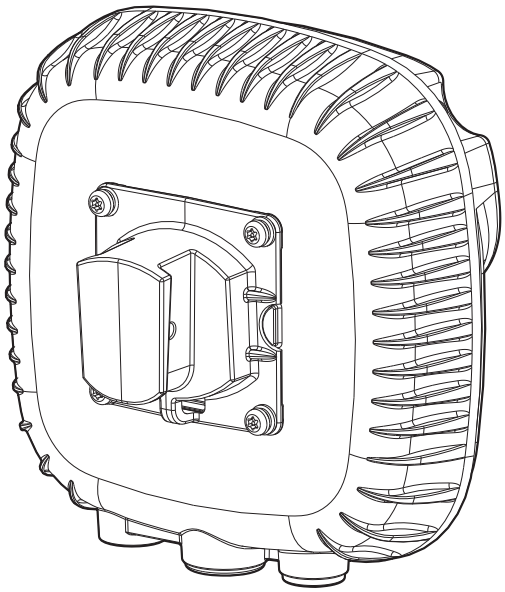

Figure 3 *AP-387 Bottom View*

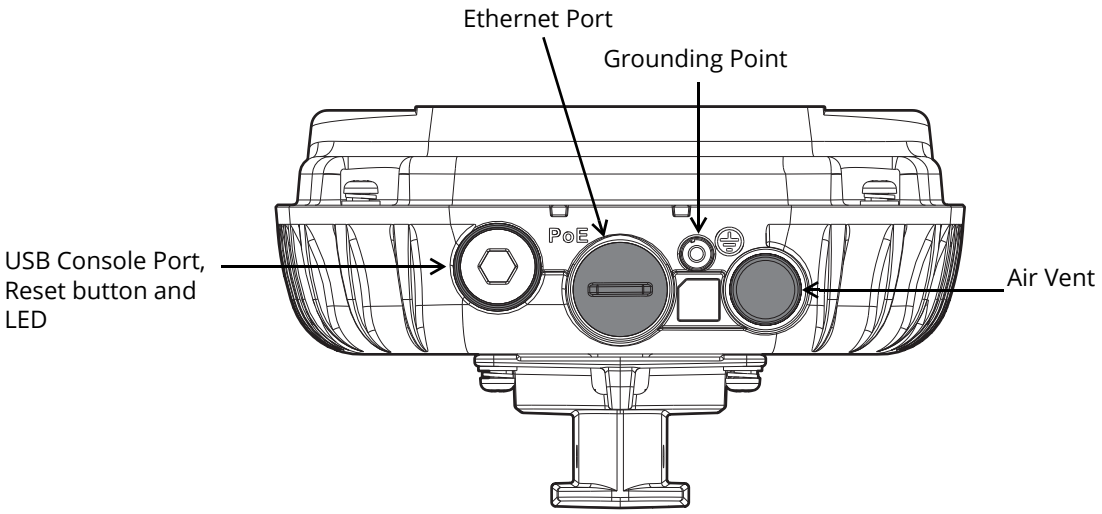

LED

The 387 Series access point is equipped with one LED that indicates the system status of the access point.

Table 1 *387 Series LED Meanings during Boot Up*

LED	Color/State	Meaning
System LED	Off	No power to AP
	Red	Initial power-up
	Green - Flashing	AP booting
	Green - Steady	AP ready and 1000Mbps Ethernet link established. The LED turns off after 1200 seconds
	Green - Yellow, 6 seconds period	AP ready and 10/100Mbps Ethernet link established. The LED turns off after 1200 seconds

Table 2 *387 Series LED Meanings during Operation*

LED	Color/State	Meaning
System LED	Solid Red	General fault
	One blink off every 3 seconds	Radio 0 fault (5GHz)
	Two quick blink off 0.5 seconds apart cycled every 3 seconds	Radio 1 fault (60GHz)

E0/POE

The 387 Series access point is equipped with one 100/1000 Base-T auto-sensing MDI/MDX Ethernet port (E0) for wired network connectivity. This port supports IEEE 802.3at Power over Ethernet (PoE) compliance, allowing the 387 Series access point to be powered from an 802.3at compliant PoE power supply.

Grounding Point

Always remember to protect the access point by installing grounding lines. The ground connection must be complete before connecting power to the access point enclosure.

USB Console Port

The USB Micro-B console port allows you to connect the access point to a laptop or serial console for direct management. Use the included USB console cable to connect the access point. You can download the necessary driver for USB-UART adapter from support.arubanetworks.com under the **Tools & Resources** tab.

NOTE

You need a proper Allen wrench (8mm) to open the cover of the USB Console port.

Use the following setting to access the terminal:

Table 3 *Console Settings*

Baud Rate	Data Bits	Parity	Stop Bits	Flow Control
9600	8	None	1	None

Reset Button

To reset a 387 Series access point to factory default settings:

1. Press and hold down the reset button using a small, narrow object such as a paper clip while the 387 Series access point is not powered.
2. Connect the PoE power supply to the 387 Series access point while the reset button is being held down.
3. Release the reset button on the 387 Series access point after 15 seconds.

Before You Begin

CAUTION

FCC Statement: Improper termination of access points installed in the United States configured to non-US model controllers will be in violation of the FCC grant of equipment authorization. Any such willful or intentional violation may result in a requirement by the FCC for immediate termination of operation and may be subject to forfeiture (47 CFR 1.80).

Pre-Installation Network Requirements

If the 387 Series access point is deployed in controller-based (ArubaOS) mode, after WLAN planning is complete and the appropriate products and their placement have been determined, the Aruba controller(s) must be installed and initial setup performed before the Aruba access points are deployed. For initial setup of the controller, refer to the *ArubaOS Quick Start Guide* for the software version installed on your controller. If the 387 Series access point is deployed in Instant mode, no controllers are needed. For procedures involved in deploying the access point in ArubaOS and Instant modes, refer to the *AP Software Quick Start Guide* by visiting the **Documentation** tab on support.arubanetworks.com, and then selecting **Software User & Reference Guides** > **Aruba Unified**.

Pre-Installation Checklist

Before installing your 387 Series access point, be sure that you have the following:

- CAT5E UTP cable or better
- IEEE 802.3at compliant PoE source

For 387 Series access point running ArubaOS only:

- Aruba controller provisioned on the network
- Layer 2/3 network connectivity to your access point
- One of the following network services:
  - Aruba Discovery Protocol (ADP)
  - DNS server with an “A” record

- DHCP Server with vendor specific options

NOTE

Aruba in compliance with governmental requirements, has designed the 387 Series access points so that only authorized network administrators can change configuration settings. For more information about AP configuration, refer to the ArubaOS Quick Start Guide and ArubaOS/Instant User Guide.

CAUTION

Access points are radio transmission devices and as such are subject to governmental regulation. Network administrators responsible for the configuration and operation of access points must comply with local broadcast regulations. Specifically, access points must use channel assignments appropriate to the location in which the access point will be used.

Verifying Pre-Installation Connectivity

NOTE

The instructions in this section are applicable to the 387 Series access points running ArubaOS only.

Before you install access points in a network environment, make sure that the access points will be able to locate and connect to the controller when they are powered on. Specifically, you must verify the following conditions:

- When connected to the network, each access point is assigned a valid IP address.
- Access points are able to locate the controller.

Refer to the *ArubaOS Quick Start Guide* for instructions on locating and connecting to the controller.

Outdoor Planning and Deployment Considerations

Prior to deploying an outdoor wireless network, the environment must be evaluated to plan for a successful WLAN deployment. Successfully evaluating the environment enables the proper selection of routers and antennas and assists in the determination of their placement for optimal RF coverage. This process is considered WLAN or RF planning and Aruba's system engineers can assist in the outdoor planning process.

NOTE

The rules for the 5600-5650 MHz band vary by region.

Identifying Specific Installation Locations

You can mount the 387 Series access point on a wall or pole. Each location should be as close as possible to the center of the intended coverage area and should be free from obstructions or obvious sources of interference. These RF absorbers/reflectors/interference sources will impact RF propagation and should have been accounted for during the planning phase and adjusted for in RF plan.

Identifying Known RF Absorbers/Reflectors/Interference Sources

Identifying known RF absorbers, reflectors, and interference sources while in the field during the installation phase is critical. Make sure that these sources are taken into consideration when you attach an AP to its fixed location. Examples of sources that degrade RF performance include:

- Cement and brick
- Objects that contain water
- Metal
- Microwave ovens
- Wireless phones and headsets

Installing the Access Point

NOTE

Service to all Aruba products should be performed by trained service personnel only.

Using Mount Kits

The 387 Series access point can be installed on a wall or attached to a pole by using mount kits:

Table 4 *Applicable Mount Kits for 387 Series Access Point*

Part Number	Description
JW054A	AP-270-MNT-H1 mount kit for hanging from inclined or horizontal structure.
JW055A	AP-270-MNT-H2 flush mount kit for wall and ceiling mounting.

NOTE

The 387 Series access point does not ship with any mount kits. These mount kits are available as accessories and must be ordered separately.

NOTE

For installation instructions on AP-270-MNT-H1 and AP-270-MNT-H2 mount kits, please refer to the *AP-270-MNT-H1 Installation Guide and AP-270-MNT-H2 Installation Guide* respectively.

To ensure successful point-to-point connection, the 387 Series access points should mount face to face as shown in Figure 4.

Figure 4 *Mounting AP-387 Face to Face*

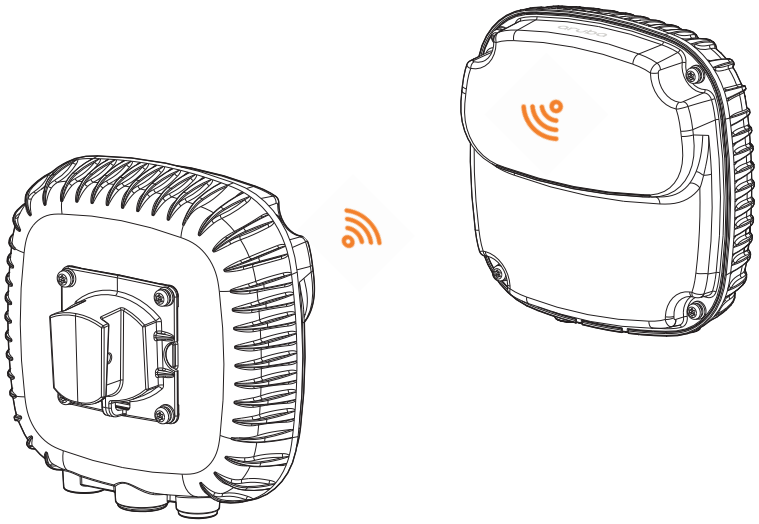

Grounding the Access Point

The grounding must be completed before powering up the access point. The grounding wire should be #8 AWG.

1. Peel the cover of one end of the grounding wire and place the bare grounding wire into the included copper lug, and press firmly with the crimping pliers.
2. Fasten the copper lug to the grounding hole on the access point with the included M4 x6 screw.

Connecting the Ethernet Cable

To connect the Ethernet cable to the access point, perform the following steps using the Ethernet cable glands that ships with your access point.

CAUTION

Failure to use the included Ethernet cable glands can lead to connectivity and POE issues.

NOTE

The cable is not included and must be purchased separately. Purchase a suitable UV-resistant, outdoor rated, CAT 5E or better RJ45 cable for use with the access point.

Figure 5 *Installing the Ethernet Cable Gland*

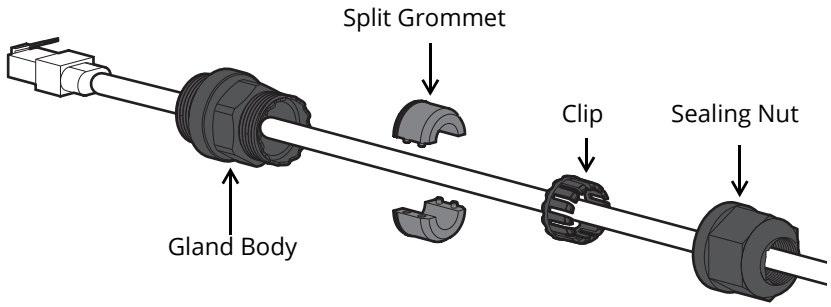

1. Remove the dust cap from the Ethernet port
2. Slide the sealing nut, clip, split grommet and gland body over the cable.
3. Insert the RJ45 connector to the Ethernet port.
4. Screw the gland body onto the Ethernet port.
5. Combine the two split parts of the grommet over the cable, and move it towards the gland body until it locates at the recess of the gland body.
6. Move the clip towards the gland body, passing over the grommet, until the wavy end of the clip properly fits into the wavy end of the gland body.
7. Screw the sealing nut onto the gland body.

NOTE

Two grommets are provided in the package for use with the Ethernet cables. One is applicable for cables with 4-6 mm diameter, and another is applicable for cables with 6-10 mm diameter.

Verifying Post-Installation Connectivity

The integrated LEDs on the access point can be used to verify that the access point is receiving power and initializing successfully (see Table 1 and Table 2). For instructions on initial setup and software configuration, refer to the AP Software Quick Start Guide.

Electrical and Environmental Specifications

Electrical

- Ethernet
  - One 100/1000Base-T auto-sensing Ethernet RJ-45 Interfaces
  - Power over Ethernet (IEEE 802.3at compliant)

Environmental

- Operating

- Temperature: -40ºC to 60ºC (-40ºF to 140ºF)
- Storage
  - Temperature: -40ºC to 70ºC (-40ºF to 158ºF)
  - Humidity: 5% to 93% non-condensing

For additional specifications on this product, please refer to the data sheet at www.arubanetworks.com.

Regulatory Model Number

The regulatory model number (RMN) for 387 Series:

- AP-387: APEX0387

Safety and Regulatory Compliance

FCC

To view the FCC ID for controller-managed access points:

1. Log into the controller WebUI
2. Navigate to Maintenance > Controller > About

To view the FCC ID for Instant access points:

1. Log into the virtual controller WebUI
2. Navigate to Maintenance > About

CAUTION

RF Radiation Exposure Statement: This equipment complies with RF radiation exposure limits. This equipment should be installed and operated with a minimum distance of 14.96 inches (38cm) between the radiator and your body for 2.4GHz, 5GHz and 60GHz operations.

CAUTION

Déclaration de la concernant l'exposition aux rayonnements à fréquence radioélectrique (FR): Cet appareil est conforme aux limites d'exposition aux rayonnements FR établies. Il doit être installé et utilisé à une distance minimale de 38 cm (14.96 pouces) entre le radiateur et votre corps, qu'il opère sur la bande 2.4 GHz, 5GHz ou 60GHz.

CAUTION

The device could automatically discontinue transmission in case of absence of information to transmit, or operational failure. Note that this is not intended to prohibit transmission of control or signaling information or the use of repetitive codes where required by the technology.

CAUTION

Changes or modifications to this unit not expressly approved by the party responsible for compliance could void the user's authority to operate this equipment.

CAUTION

Toute modification effectuée sur cet équipement sans l'autorisation expresse de la partie responsable de la conformité est susceptible d'annuler son droit d'utilisation.

FCC Class B Part 15

This equipment has been tested and found to comply with the limits for a Class B digital device, pursuant to Part 15 of the FCC Rules. These limits are designed to provide reasonable protection against harmful interference in a residential installation. This equipment generates, uses and can radiate radio frequency energy and, if not installed and used in accordance with the manufacturer's instructions, may cause harmful interference to radio communications.
However, there is no guarantee that interference will not occur in a particular installation. If this equipment does cause harmful interference to radio or television reception, which can be determined by turning the equipment off and on, the user is encouraged to try to correct the interference by one or more of the following measures:

- Reorient or relocate the receiving antenna.

- Increase the separation between the equipment and receiver.
- Connect the equipment to an outlet on a circuit different from that to which the receiver is connected.
- Consult the dealer or an experienced radio or TV technician for help.

Canada

This device complies with ISED's license-exempt RSS standard(s).
Operation is subject to the following two conditions: (1) this device may not cause interference, and (2) this device must accept any interference, including interference that may cause undesired operation of the device.

When operated in the 5.15 to 5.25 GHz frequency range, this device is restricted to indoor use to reduce the potential for harmful interference with co-channel Mobile Satellite Systems.

Déclaration d'Industrie Canada

Le présent appareil est conforme aux CNR d'Industrie Canada applicables aux appareils radio exempts de licence. L'exploitation est autorisée aux deux conditions suivantes : (1) l'appareil ne doit pas produire de brouillage, et (2) l'utilisateur de l'appareil doit accepter tout brouillage radioélectrique subi, même si le brouillage est susceptible d'en compromettre le fonctionnement.

Professional Installation Instruction

This product is designed for specific application and needs to be installed by a qualified personal who has RF and related rule knowledge. The general user shall not attempt to install or change the setting.

The product shall be installed at a location where the radiating antenna can be kept 14.96 inches (38cm) from nearby person in normal operation condition to meet regulatory RF exposure requirement.

Please carefully select the installation position and make sure that the final output power does not exceed the limit set force in relevant rules. The violation of the rule could lead to serious federal penalty.

Instructions d'installation professionnelle

Ce produit est destine a un usage specifique et doit etre installe par un personnel qualifie maitrisant les radiofrequences et les regles s'y rapportant. L'installation et les reglages ne doivent pas etre modifies par l'utilisateur final.

En usage normal, afin de respecter les exigences reglementaires concernant l'exposition aux radiofrequences, ce produit doit etre installe de facon a respecter une distance de 14.96 inches (38cm) entre l'antenne emettrice et les personnes.

Choisir avec soin la position d'installation et s'assurer que la puissance de sortie ne depasse pas les limites en vigueur. La violation de cette regle peut conduire a de serieuses penalites federales.

EU Regulatory Conformance

Aruba hereby declares that the 387 Series wireless access points are in compliance with directives listed below:

- Radio Equipment Directive 2014/53/EU
- REACH Regulation (EC) No.: 1907/2006
- RoHS Directive 2011
- WEEE Directive 2012

The Declaration of Conformity made under Radio Equipment Directive 2014/53/EU is available for viewing at: www.hpe.com/eu/certificates. Select the document that corresponds to your device's model number as it is indicated on the product label

Medical

1. Equipment not suitable for use in the presence of flammable mixtures.
2. Connect to only IEC 60950-1 or IEC 60601-1 certified products and power sources. The end user is responsible for the resulting medical system complies with the requirements of IEC 60601-1.
3. Wipe with a dry cloth, no additional maintenance required.
4. No serviceable parts, the unit must be sent back to the manufacturer for repair.

5. No modifications are allowed without Aruba approval.

NOTE

This device intended to be installed outdoors.

NOTE

This device has no IEC/EN60601-1-2 essential performance.

CAUTION

Use of this equipment adjacent to or stacked with other equipment should be avoided because it could result in improper operation. If such use is necessary, this equipment and the other equipment should be observed to verify that they are operating normally.

NOTE

Compliance is based on the use of Aruba approved accessories. Refer to the ordering guide for this access point at www.arubanetworks.com.

CAUTION

Use of accessories, transducers and cables other than those specified or provided by the manufacturer of this equipment could result in increased electromagnetic emissions or decreased electromagnetic immunity of this equipment and result in improper operation.

CAUTION

Portable RF communications equipment (including peripherals such as antenna cables and external antennas) should be used no closer than 30 cm (12 inches) to any part of the access point. Otherwise, degradation of the performance of this equipment could result.

NOTE

The emissions characteristics of this equipment make it suitable for use in industrial areas and hospitals (CISPR 11 class A). If it is used in a residential environment (for which CISPR 11 class B is normally required) this equipment might not offer adequate protection to radio-frequency communication services. The user might need to take mitigation measures, such as relocating or re-orienting the equipment.

Radio Type	Frequency Range	Power (EIRP)	Modulation
BLE	2400-2483.5MHz	<10dBm	GFSK
802.11	5150-5250MHz	23dBm	OFDM
802.11	5250-5350MHz	23dBm	OFDM
802.11	5500-5720MHz	30dBm	OFDM
802.11	5725-5850MHz	14dBm	OFDM
802.11ad	57-66GHz	40dBm	OFDM

NOTE

Actual output power values will depend on national restrictions and the antennas used.

Emissions	Complies with CISPR11/EN55011, Group 1, Class B
Immunity	
Electrostatic discharge:	+/-8kV contact/ +/-15kV air

Radiated RF EM fields:	80MHz - 2.7GHz, 3V/m
Proximity fields from RF wireless communication equipment:	Per Table 9 of the IEC/EN 606010-1-2
RATED power frequency magnetic fields:	30A/m
Electrical Fast Transients:	+/-2kV
Surges (line-to-line):	+/- 0.5, 1.0
Surges (line-to-ground):	+/- 0.5, 1.0, 2kV
Conducted disturbances induced by RF fields:	0.15MHz-80MHz, 3Vrms
Voltage Dips:	0%, 0.5 cycles, 0%, 1 cycle, 70% 25/30 cycles
Voltage Interruptions:	0% 250/300 cycles

Brazil

Este equipamento não tem direito à proteção contra interferência prejudicial e não pode causar interferência em sistemas devidamente autorizados.

Japan

ご使用になっている装置に VCCI マークが付いていましたら、次の説明文を
お読み下さい。

この装置は、クラス B 情報技術装置です。この装置は、家庭環境で使用すること
を目的としていますが、この装置がラジオやテレビジョン受信機に近接して
使用されると、受信障害を引き起こすことがあります。取扱説明書に従って
正しい取り扱いをして下さい。

VCCI-B

México

La operación de este equipo está sujeta a las siguientes dos condiciones: (1) es posible que este equipo o dispositivo no cause interferencia perjudicial y (2) este equipo o dispositivo debeaceptar cualquier interferencia, incluyendo la que pueda causar su operación no deseada.

Morocco

Нормативные требования Евразийского Экономического Союза

HPE Russia: ООО "Хьюлетт Паккард Энтерпрайз" Российская Федерация, 125171, г. Москва, Ленинградское шоссе, 16А, стр.3, Телефон: +7 499 403 4248 Факс: +7 499 403 4677

'HPE Belarus': ИООО «Хьюлетт-Паккард Бел», Республика Беларусь, 220030, г. Минск, ул. Интернациональная, 36-1, Телефон/факс: +375 17 392 28 20

'HPE Kazakhstan': ТОО «Хьюлетт-Паккард (К)», Республика Казахстан, 050040, г. Алматы, Бостандыкский район, проспект Аль-Фараби, 77/7, Телефон/факс: + 7 727 355 35 50

Kazakhstan

ЖШС "Хьюлетт Паккард Энтерпрайз" Ресей Федерациясы, 125171, Мәскеу, Ленинград тас жолы, 16А блок 3, Телефон: +7 499 403 4248 Факс: +7 499 403 4677

«HEWLETT-PACKARD Bel» ЖШС, Беларусь Республикасы, 220030, Минск қ., Интернациональная көшесі, 36/1, Телефон/факс: +375 17 392 28 20

ЖШС «Хьюлетт-Паккард (К)», Қазақстан Республикасы, 050040, Алматы к., Бостандык ауданы, Әл-Фараби даңғ ылы, 77/7, Телефон/факс: +7 (727) 355 35 50

Taiwan

第十二條

經型式認證合格之低功率射頻電機，非經許可，公司、商號或使用者均不得擅自變更頻率、加大功率或變更原設計之特性及功能。

第十四條

低功率射頻電機之使用不得影響飛航安全及干擾合法通信；經發現有干擾現象時，應立即停用，並改善至無干擾時方得繼續使用。

前項合法通信，指依電信法規定作業之無線電通信。

低功率射頻電機須忍受合法通信或工業、科學及醫療用電波輻射性電 機設備之干擾。

Contacting Support

Table 5 *Contact Information*

Main Site	arubanetworks.com
Support Site	support.arubanetworks.com
Airheads Social Forums and Knowledge Base	community.arubanetworks.com
North American Telephone	1-800-943-4526 (Toll Free) 1-408-754-1200
International Telephones	arubanetworks.com/support-services/contact-support/
Software Licensing Site	hpe.com/networking/support
End of Support information	arubanetworks.com/support-services/end-of-life-products/end-of-life-policy/
Security Incident Response Team (SIRT)	Site: arubanetworks.com/support-services/security-bulletins/ Email: sirt@arubanetworks.com

Copyright

© Copyright 2019 Hewlett Packard Enterprise Development LP

Open Source Code

This product includes code licensed under the GNU General Public License, the GNU Lesser General Public License, and/or certain other open source licenses. A complete machine-readable copy of the source code corresponding to such code is available upon request. This offer is valid to anyone in receipt of this information and shall expire three years following the date of the final distribution of this product version by Hewlett Packard Enterprise Company. To obtain such source code, send a check or money order in the amount of US $10.00 to:

Hewlett Packard Enterprise Company
Attn: General Counsel
6280 America Center Drive
San Jose, CA 95002
USA

Warranty

This hardware product is protected by an Aruba warranty. For more details visit www.hpe.com/us/en/support.html