HPE Aruba Networking 760 Series Ruggedized Access Points

Installation Guide

Hewlett Packard Enterprise

Copyright Information

© Copyright 2025 Hewlett Packard Enterprise Development LP.

Open Source Code

This product includes code licensed under certain open source licenses which require source compliance. The corresponding source for these components is available upon request. This offer is valid to anyone in receipt of this information and shall expire three years following the date of the final distribution of this product version by Hewlett Packard Enterprise Company. To obtain such source code, please check if the code is available in the HPE Software Center at https://myenterpriselicense.hpe.com/cwp-ui/software but, if not, send a written request for specific software version and product for which you want the open source code. Along with the request, please send a check or money order in the amount of US $10.00 to:

Hewlett Packard Enterprise Company
Attn: General Counsel
WW Corporate Headquarters
1701 E Mossy Oaks Rd, Spring, TX 77389
United States of America.

Legal Disclaimer

The resource assets in this document may include abbreviated and/or legacy terminology for products. See www.arubanetworks.com for current and complete product lines and names.

Contents

Contents 1
About This Guide 3
Guide Overview 3
Related Documentation 3
Contacting Support 3
Hardware Overview 4
Package Contents 4
Tools Required 4
Access Point Views 5
LED 8
Reset Button 9
USB-C Console Port 9
Ethernet Port 9
Grounding Point 9
USB-C Host Interface 10
BLE Radio Default State 10
Console Port Default State 10
USB Host Interface Default State 10
Installation 11
Before You Begin 11
Outdoor Planning and Deployment Considerations 12
Identifying Specific Installation Locations 12
AP-763 Installation 13
Connecting Ethernet Cable for AP-763 15
Connecting USB Cable for AP-763 18
Replacing the dust covers for AP-763 20
AP-764 and AP-765 Installation 21
Grounding Access Point 22
Connecting Ethernet Cable for AP-764 and AP-765 22
Software 24
Verifying Post-Installation Connectivity 24
Specifications, Safety, and Compliance 25
Specifications 25
Regulatory Information 25
Medical 26
Brazil 26
Canada 27
European Union 29
United Kingdom 30
India 30
Mexico 30
EAC 31
Taiwan 31

Ukraine 32
United States 32
Proper Disposal of HPE Aruba Networking Equipment 34

Chapter 1
About This Guide

This document describes the hardware features of the HPE Aruba Networking 760 Series Ruggedized Access Points. It provides a detailed overview of the physical and performance characteristics of each access point model and explains how to install the access point.

Guide Overview

- Hardware Overview provides a detailed hardware overview of the HPE Aruba Networking 760 Series Ruggedized Access Points.
- Installation describes how to install the HPE Aruba Networking 760 Series Ruggedized Access Points.
- Specifications, Safety, and Compliance lists the HPE Aruba Networking 760 Series Ruggedized Access Points technical specifications, safety, and regulatory compliance information.

Related Documentation

You require the following documents for the complete management of HPE Aruba Networking 760 Series Ruggedized Access Points.

- Latest document of the software user guide: https://www.arubanetworks.com/techdocs/ArubaDocPortal/content/cons-aos-home.htm
- CLI bank: https://www.arubanetworks.com/techdocs/CLI-Bank/Content/Home.htm

Contacting Support

Table 1: *Contact Information*

Main Site	arubanetworks.com
Support Site	asp.arubanetworks.com
Airheads Social Forums and Knowledge Base	community.arubanetworks.com
North American Telephone	1-800-943-4526 (Toll Free) 1-408-754-1200
International Telephone	arubanetworks.com/support-services/contact-support/
Software Licensing Site	lms.arubanetworks.com
End-of-life Information	arubanetworks.com/support-services/end-of-life/
Security Incident Response Team	Site: arubanetworks.com/support-services/security-bulletins/ Email: networking-sirt@hpe.com

Chapter 2
Hardware Overview

The HPE Aruba Networking 760 Series Ruggedized Access Points comply with the IEEE 802.11be WLAN standard (Wi-Fi 7), while also supporting IEEE 802.11a/b/g/n/ac/ax wireless services.

Package Contents

Inform your supplier to check if there are any incorrect, missing, or damaged parts. If possible, retain the carton, including the original packing materials. Use these materials to repack and return the unit to the supplier if needed.

Table 2: *Package Contents*

Item	Quantity
AP-763, or AP-764, or AP-765 Access Point	1
M20 gland (AP-764 and AP-765 only)	1
Console cable	1
Grounding lug kit	1

Tools Required

- Flat blade screwdriver (for Ethernet port cap)
- 8mm Allen or hex key (for USB console cap)

Access Point Views

Figure 1 *AP-763 Front View*

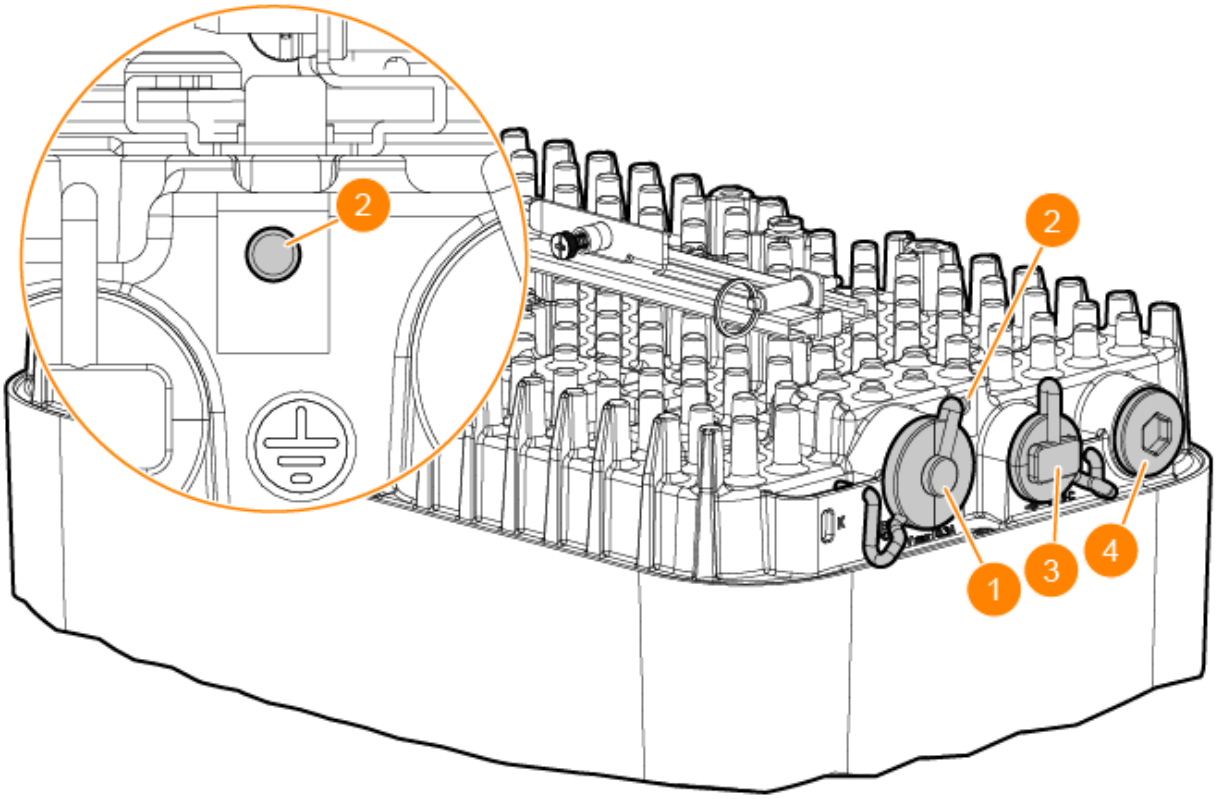

Callout	Component
1	E0 Port (PoE-In)
2	Grounding Point
3	USB-C Interface
4	USB-C Console Port, Reset Button, and LED

Figure 2 *AP-764 Access Point*

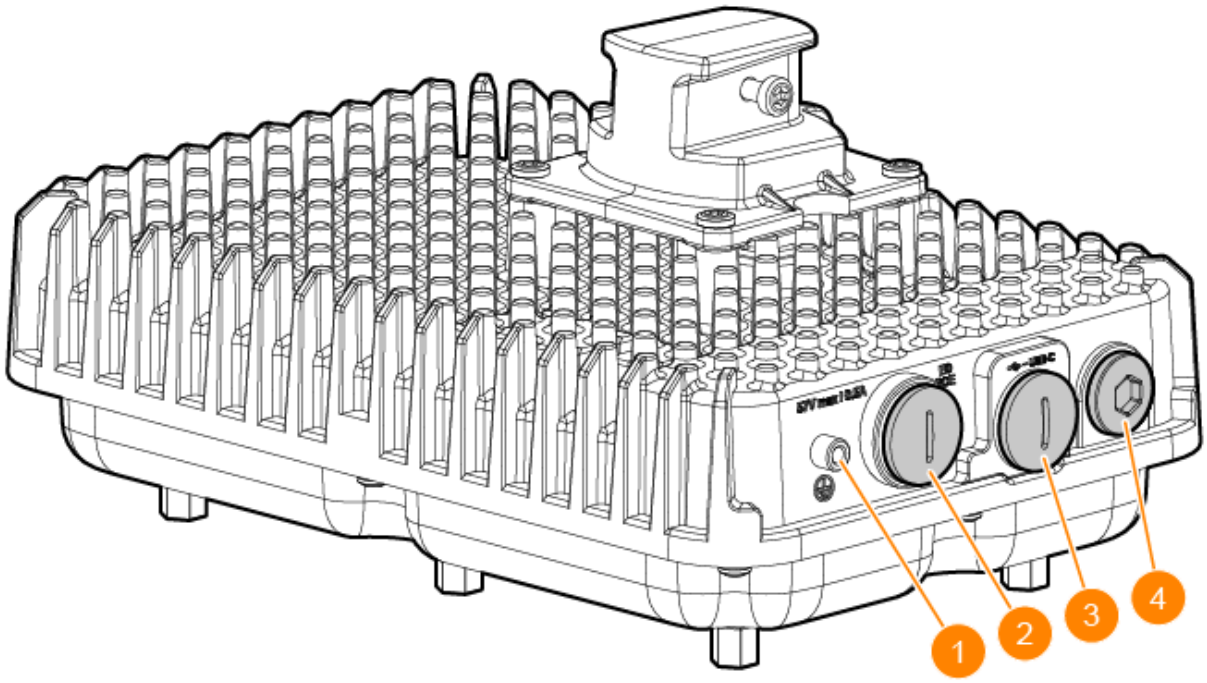

Callout	Component
1	Grounding Point
2	E0 Port (PoE-In)
3	USB-C Interface
4	USB-C Console Port, Reset Button, and LED

The AP-764 access point has two RP-SMA connectors for 2.4/5 GHz dual-band antenna, two RP-SMA connectors for 6 GHz antenna, two RP-SMA IoT connectors, and one RP-SMA connector for external GPS antenna.

Figure 3 *AP-764 External Antenna Connectors*

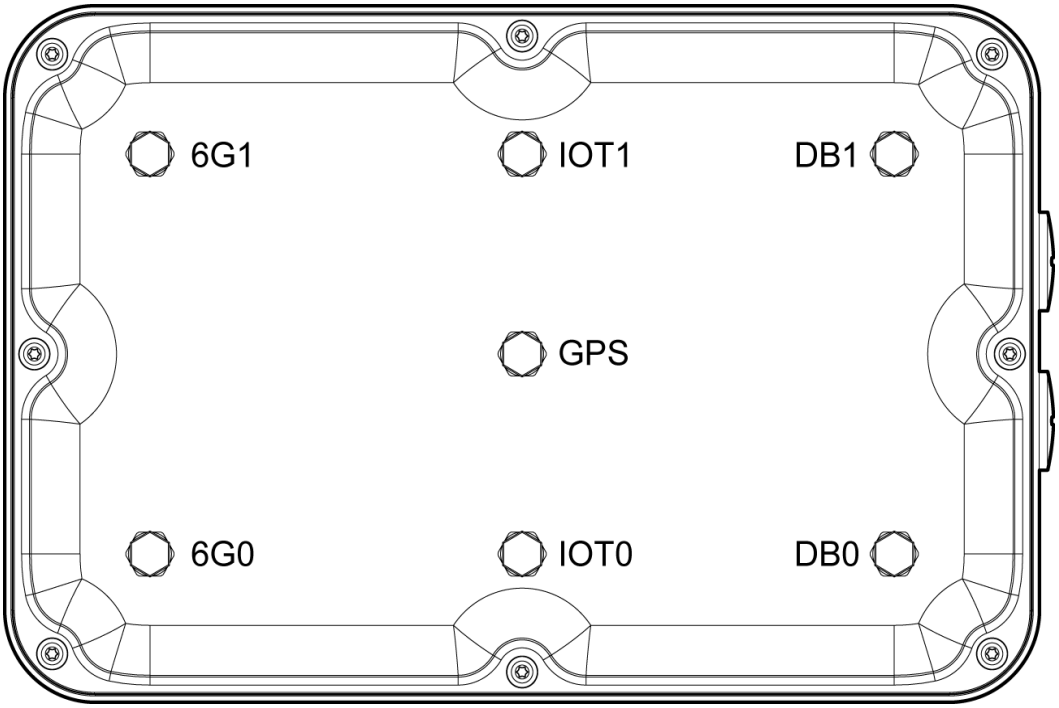

External antennas for this device must be installed by a professional installer, using manufacturer-approved antennas only. The Equivalent Isotropically Radiated Power (EIRP) levels for all external antenna devices must not exceed the regulatory limit set by the host country/domain. Installers are required to record the antenna gain for this device in the system management software. A list of approved antennas can be found in the ordering guide at https://arubanetworking.hpe.com/

CAUTION

Les antennes externes pour cet appareil doivent être installées par un professionnel agréé, en utilisant uniquement des antennes approuvées par le fabricant. Les niveaux équivalents de puissance à rayonnement isotrope (EIRP) pour tous les périphériques d'antenne externe ne doivent pas dépasser la limite réglementaire définie par le pays hôte / domaine. Les installateurs doivent enregistrer le gain d'antenne pour cet appareil dans le logiciel de gestion du système. Une liste d'antennes approuvées peut être trouvée à https://arubanetworking.hpe.com/

Figure 4 *AP-765 Access Points*

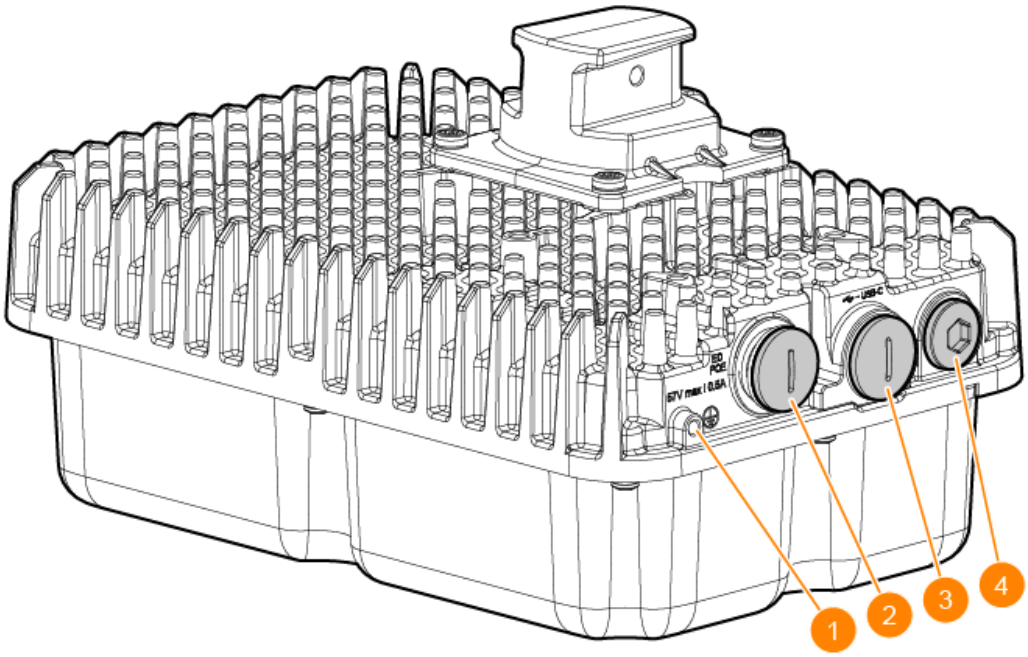

Callout	Component
1	Grounding Point
2	E0 Port (PoE-In)
3	USB-C Interface
4	USB-C Console Port, Reset Button, and LED

LED

The 760 Series access point is equipped with one LED that indicates the system status of the access point.

Table 3: *LED Meanings during Boot Up*

Color /State	Meaning
Off	No power to AP
Red	Initial power-up
Flashing - Green	AP booting, not ready
On - Green	AP ready. GbE (or better). The LED turns off after 1200 seconds.
Green - Yellow, 6 seconds period	AP ready. 100Mbps connected. The LED turns off after 1200 seconds.

Color /State	Meaning
Green - Flashing[1]	AP in deep sleep
Red - Flashing[2]	AP in thermal shutdown

1. Mostly off (off 6 seconds, then one blink flash).
2. Equally off/on (off 1 second, then red 1 second).

Table 4: *LED Meanings during Operation*

Color/State	Meaning
Solid Red	General fault - Immediate attention required
One blink off every 3 seconds	Radio 0 fault (5 GHz)
Two quick blink off 0.5 seconds apart cycled every 3 seconds	Radio 1 fault (2.4 GHz)
Three quick blink off 0.5 seconds apart cycled every 3 seconds	Radio 2 fault (6 GHz)

Reset Button

The reset button can be used to reset the AP to default settings, or turn off/on the LED.

- To reset the AP to default settings, hold down the reset button for several seconds while the AP is being powered on, or for more than 10 seconds during normal operation.
- Pressing the reset button for less than 10 seconds during normal operation toggles the LED mode between "normal" (default after power on) and "all off".

USB-C Console Port

Use the included USB Type-C console cable to connect the access point to a laptop or a serial terminal for direct management.

NOTE

You need an 8mm allen or hex key to remove the console port cap.

Ethernet Port

The access point has one Ethernet port:

- E0 port: 100M/1G/2.5G/5G Base-T auto-sensing MDI/MDI-X wired network port (RJ45). The E0 port supports PoE-in, allowing the AP to draw power from an 802.3at or 802.3bt PoE power source.

Grounding Point

Always remember to protect the access point by installing the grounding line first before connecting to a network and applying power. Additionally, if removing or taking down the AP, the grounding line should be the last item disconnected.

USB-C Host Interface

The 760 Series access point has one USB-C host interface, capable of sourcing up to 2A/10W to an attached device.

BLE Radio Default State

When the access point is in factory default state the integrated BLE radio is enabled. This applies to the non-TAA product SKUs only. On the TAA products, the BLE radio is disabled when the unit is in factory default conditions. Once the AP has established a connection with its management platform, the BLE radio state is updated to match what's configured there. This state is maintained if the AP is power-cycled or rebooted.

Console Port Default State

When the access point is in factory default state the console interface (both physical port and BLE) is enabled with default credentials (username is "admin" and password is the serial number of the unit). Once the AP has established a connection with its management platform, the console port state (enabled/disabled) and access credentials are updated to match what's configured there. State and credentials are maintained if the AP is power-cycled or rebooted.

USB Host Interface Default State

When the access point is in factory default state the USB host interface is powered and enabled, assuming the AP is not in a restricted power mode. On some AP models the USB port may be disabled when a POE source with insufficient power budget is used. Once the AP has established a connection with its management platform, the USB host interface state is updated to match what's configured there. This state is maintained if the AP is power-cycled or rebooted.

Chapter 3
Installation

Before You Begin

Refer to the sections below before beginning the installation process.

CAUTION

FCC Statement: Improper termination of access points installed in the United States configured to non-US model controllers will be in violation of the FCC grant of equipment authorization. Any such willful or intentional violation may result in a requirement by the FCC for immediate termination of operation and may be subject to forfeiture (47 CFR 1.80).

CAUTION

All HPE Aruba Networking access points should be professionally installed by a professional installer. The installer is responsible for ensuring that grounding is available and meets applicable national and electrical codes. Failure to properly install this product may result in physical injury and/or damage to property.

Tous les points d'accès HPE Aruba Networking doivent impérativement être installés par un professionnel agréé. Ce dernier doit s'assurer que l'appareil est mis à la terre et que le circuit de mise à la terre est conforme aux codes électriques nationaux en vigueur. Le fait de ne pas installer correctement ce produit peut entraîner des blessures corporelles et / ou des dommages matériels.

Pre-Installation Checklist

Before installing the access point, be sure that you have the following:

- A shielded Ethernet cable with network access
- Compatible mounting bracket (see HPE Aruba Networking 760 Series Ruggedized Access Points Ordering Guide for more)
- Compatible antennas (AP-764 only)

Some optional items:

- A compatible PoE midspan injector with power cord

CAUTION

Access points are radio transmission devices and as such are subject to governmental regulation. Network administrators responsible for the configuration and operation of access points must comply with local broadcast regulations. Specifically, access points must use channel assignments appropriate to the location in which the access point will be used.

Outdoor Planning and Deployment Considerations

Prior to deploying an outdoor wireless network, the environment must be evaluated to plan for a successful WLAN deployment. Successfully evaluating the environment enables the proper selection of access points and antennas and assists in the determination of their placement for optimal RF coverage.

NOTE

The rules for the 5600-5650 MHz band vary by region.

Identifying Specific Installation Locations

Use the intended RF design provided by the professionals. Each location should be as close as possible to the center of the intended coverage area and should be free from obstructions or obvious sources of interference. These RF absorbers/reflectors/interference sources will impact RF propagation and should be accounted for during the planning phase and adjusted for in RF plan.

Identifying Known RF Absorbers/Reflectors/ Interference Sources

Identifying known RF absorbers, reflectors, and interference sources while in the field during the installation phase is critical. Make sure that these sources are taken into consideration when you attach an access point to its fixed location.

RF absorbers include:

- Cement/concrete—Old concrete has high levels of water dissipation, which dries out the concrete, allowing for potential RF propagation. New concrete has high levels of water concentration in the concrete, blocking RF signals.
- Natural Items—Fish tanks, water fountains, ponds, and trees
- Brick

RF reflectors include:

- Metal Objects—Metal pans between floors, rebar, fire doors, air conditioning/heating ducts, mesh windows, blinds, chain link fences (depending on aperture size), refrigerators, racks, shelves, and filing cabinets.
- Do not place an access point between two air conditioning/heating ducts. Make sure that access points are placed below ducts to avoid RF disturbances.

RF interference sources include:

- Other Wi-Fi networks
- Microwave ovens
- Bluetooth devices

AP-763 Installation

A mounting bracket has been pre-installed on the back of the AP-763 access point. This bracket is used to secure the AP to any of the compatible mount kits (sold separately).

Table 5: *Mount Kits for AP-763 Access Point*

Part Number	Description	Installation Guide
S4K79A	AP-MNT-U Campus Access Point Type U Universal Mount Bracket Kit	AP-MNT-U Mount Kit Installation Guide
S0J40A	AP-MNT-MP10-U Campus AP 10-Pack Universal Mount Bracket Kit (Note: This kit contains mounts for 10 access points)	AP-MNT-MP10-U Mount Kit Installation Guide
R3J15A	AP-MNT-A Campus AP Type A Suspended Ceiling Rail Flat 9/16 Mount Bracket Kit	AP-MNT-A/B/C Mount Kit Installation Guide
JZ370A	AP-MNT-MP10-A Campus AP 10-Pack 9/16 Flat Ceiling Rail Mount Bracket Kit (Note: This kit contains mounts for 10 access points)	AP-MNT-MP10-A/B/C Mount Kit Installation Guide
R3J16A	AP-MNT-B Campus AP Type B Suspended Ceiling Rail Flat 15/16 Mount Bracket Kit	AP-MNT-A/B/C Mount Kit Installation Guide
Q9G69A	AP-MNT-MP10-B Campus AP 10-Pack 15/16 Flat Ceiling Rail Mount Bracket Kit (Note: This kit contains mounts for 10 access points)	AP-MNT-MP10-A/B/C Mount Kit Installation Guide
R6T34A	AP-MNT-MP10-B1 Campus AP 10-Pack 15/16 Adj Flat Ceiling Rail Mount Bracket Kit (Note: This kit contains mounts for 10 access points)	AP-MNT-MP10-B1 Mount Kit Installation Guide
R3J17A	AP-MNT-C Campus AP Type C Suspended Ceiling Rail 9/16 Profile Mount Bracket Kit	AP-MNT-A/B/C Mount Kit Installation Guide
Q9G70A	AP-MNT-MP10-C Campus AP 10-Pack Profile 9/16 Ceiling Rail Mount Bracket Kit (Note: This kit contains mounts for 10 access points)	AP-MNT-MP10-A/B/C Mount Kit Installation Guide
R3J18A	AP-MNT-D Campus AP Type D Solid Surface Mount Bracket Kit	AP-MNT-D Mount Kit Installation Guide
Q9G71A	AP-MNT-MP10-D Campus AP 10-Pack Solid Surface Mount Bracket Kit (Note: This kit contains mounts for 10 access points)	AP-MNT-MP10-D Mount Kit Installation Guide
R3J19A	AP-MNT-E Campus AP Type E Wall-Box Mount Bracket Kit	AP-MNT-E Mount Kit Installation Guide
R1C72A	AP-MNT-MP10-E Campus AP 10-Pack Wall-box Mount Bracket Kit (Note: This kit contains mounts for 10 access points)	AP-MNT-MP10-E Mount Kit Installation Guide

The pre-assembled mounting bracket can be re-installed to the back of the AP in other orientation. To do so, follow these steps:

1. Use a Phillips screwdriver to unscrew the two screws to remove the pre-installed mounting bracket from the AP.

   Figure 5 *Removing the Pre-assembled Mounting Bracket from the AP*

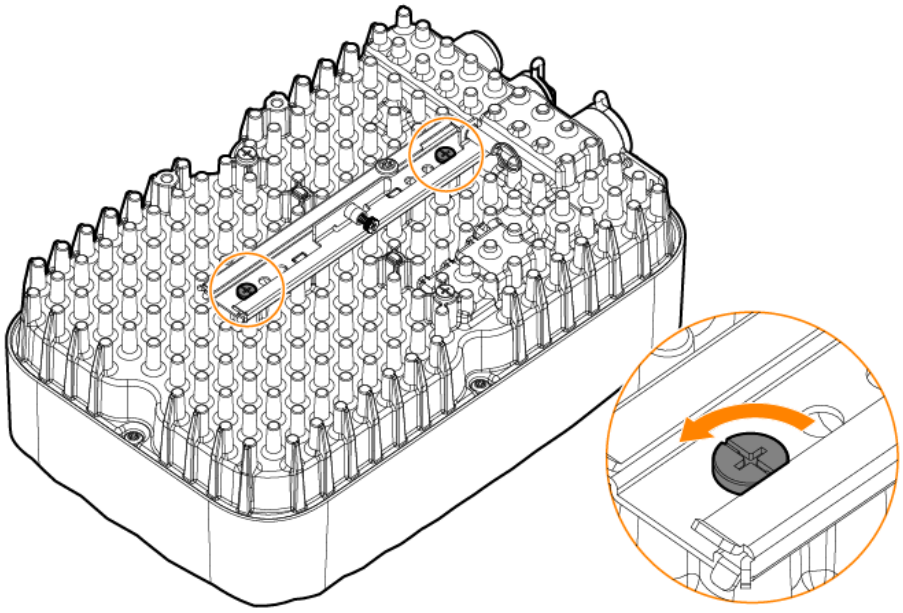

2. Align the mounting bracket with the holes on the back of the AP, and use the two screws to secure the mounting bracket to the AP in the other orentation.

   Figure 6 *Installing the Mounting Bracket to the AP in Other Orentation*

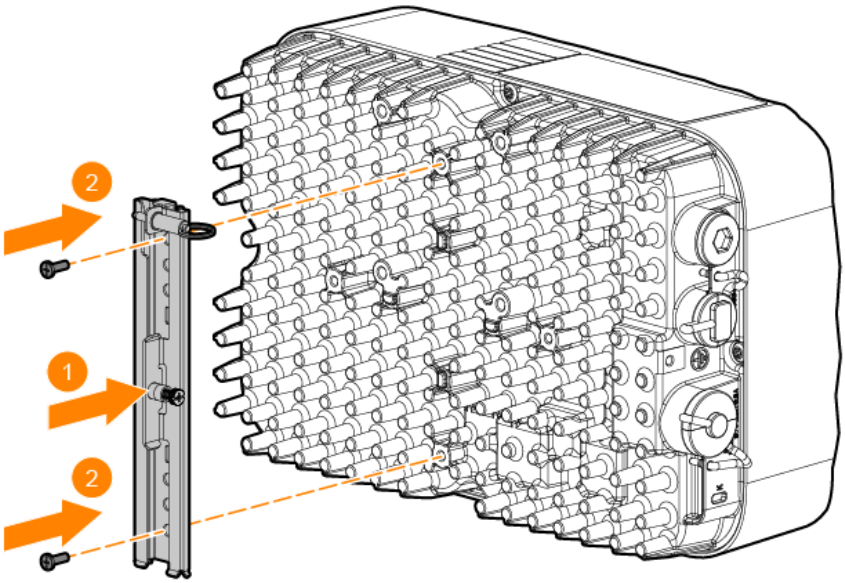

When the AP-270-MNT-ADP adapter (part number: JW056A, sold separately) is used, the AP-763 access point can be secured to the outdoor AP mount kits such as AP-OUT-MNT-V1A, AP-270MNT-V2, AP-270-MNT-H1, AP-270-MNT-H2, and AP-270-MNT-H3.

To install the AP-270-MNT-ADP adapter to the AP-763, follow these steps:

1. Use a Phillips screwdriver to unscrew the two screws to remove the pre-installed mounting bracket from the AP.

   Figure 7 *Removing the Pre-assembled Mounting Bracket from the AP*

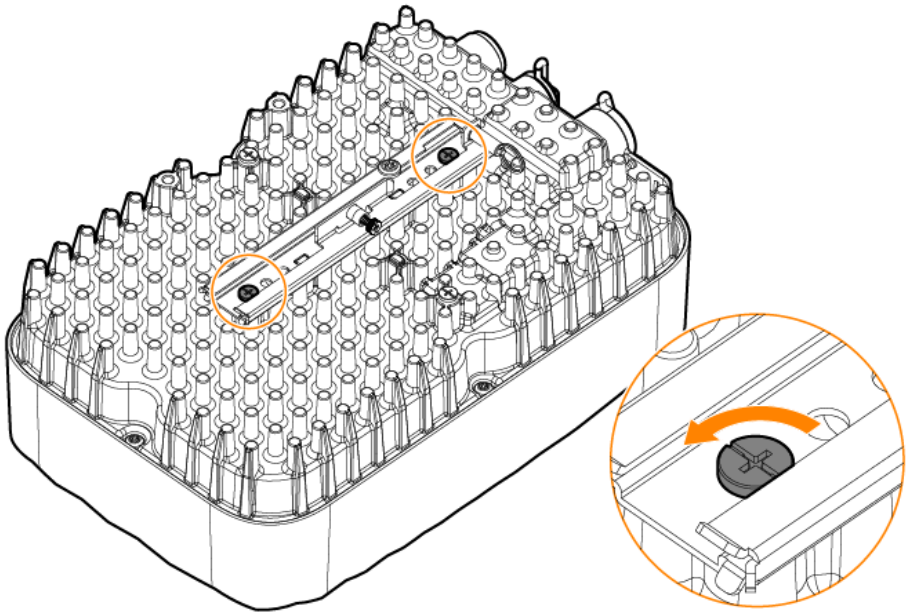

2. Use the M5x12 screws provided with the AP-270-MNT-ADP adapter to attach the adapter to the AP.

   Figure 8 *Installing the AP-270-MNT-ADP Adapter to the AP*

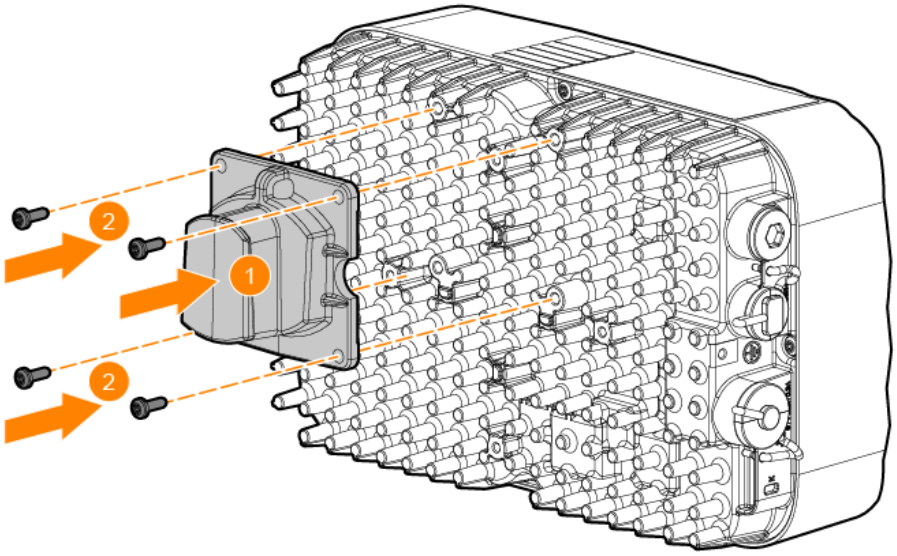

Connecting Ethernet Cable for AP-763

To connect an Ethernet cable to the AP-763 access point, perform the following steps.

1. Pull out the rubber plug.

   Figure 9 *Pulling Out the Rubber Plug*

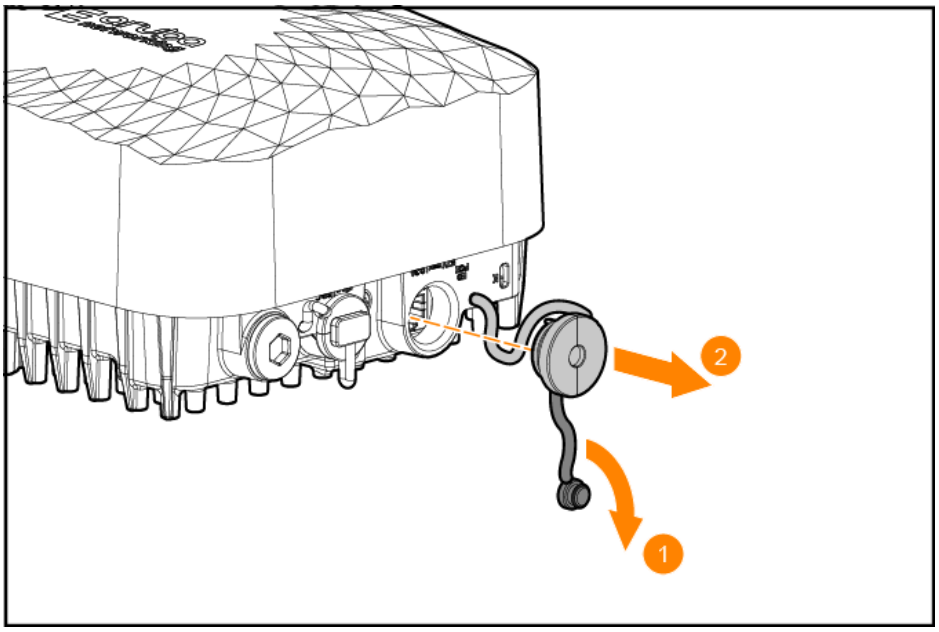

2. Insert the RJ45 connector to the Ethernet port on the AP.

   Figure 10 *Inserting the RJ45 Connector to the Ethernet Port*

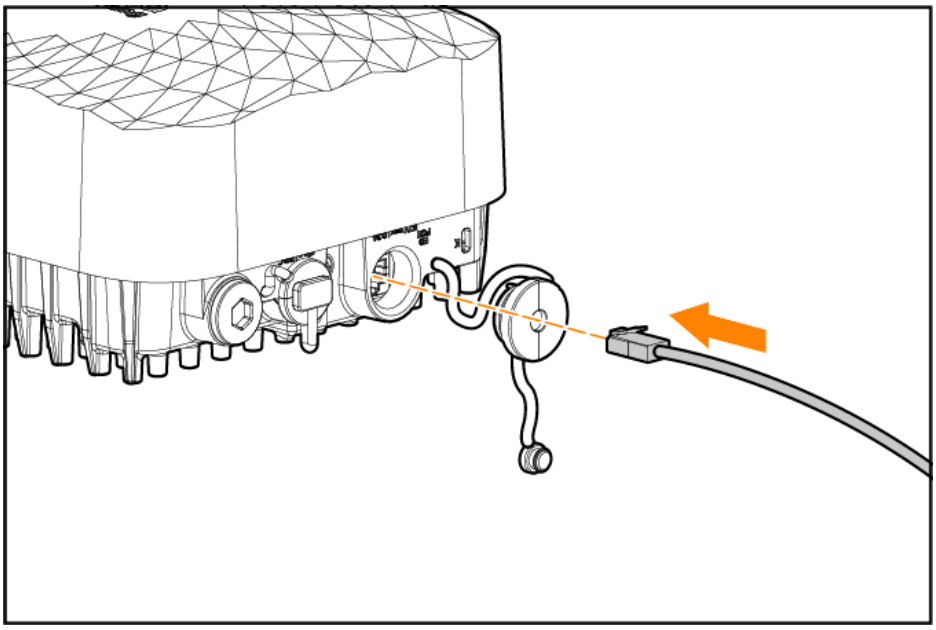

3. Seperate the dust cover in half and put it around the cable.

Figure 11 *Separating the Dust Cover in Half*

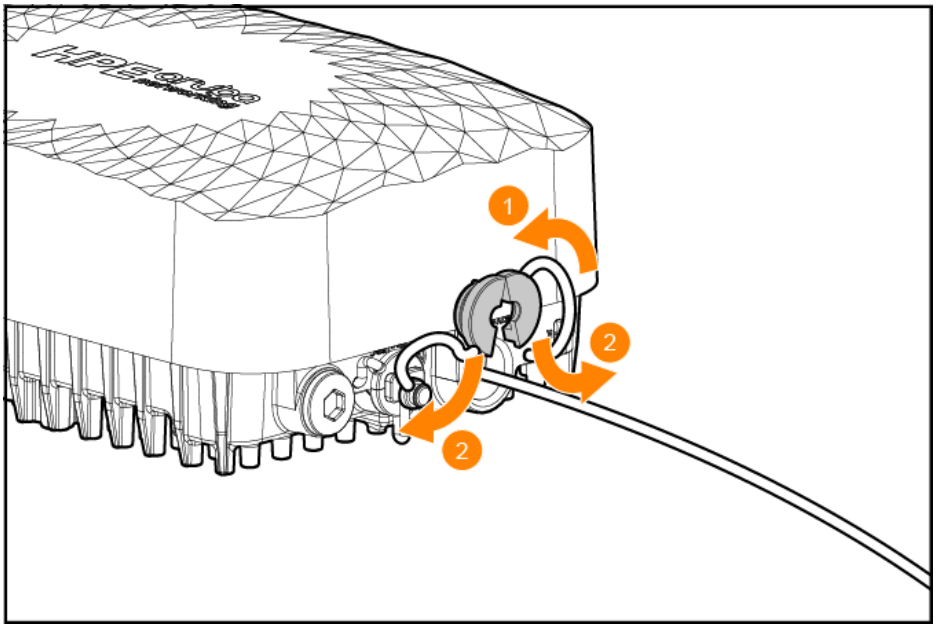

4. Push the dust cover into the Ethernet port.

Figure 12 *Pushing the Dust Cover into the Ethernet Port*

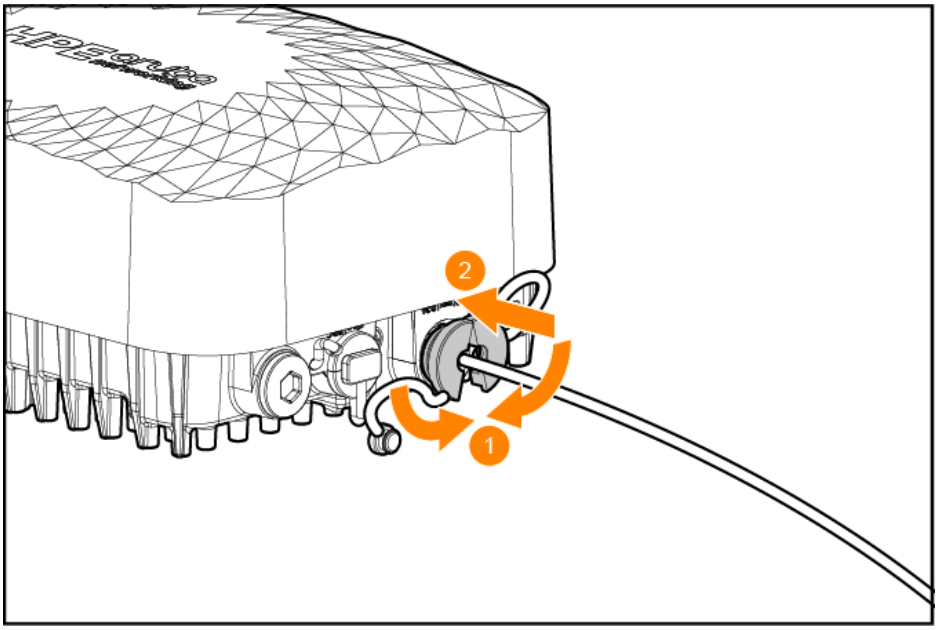

Figure 13 *Ethernet Cable Connected to the AP*

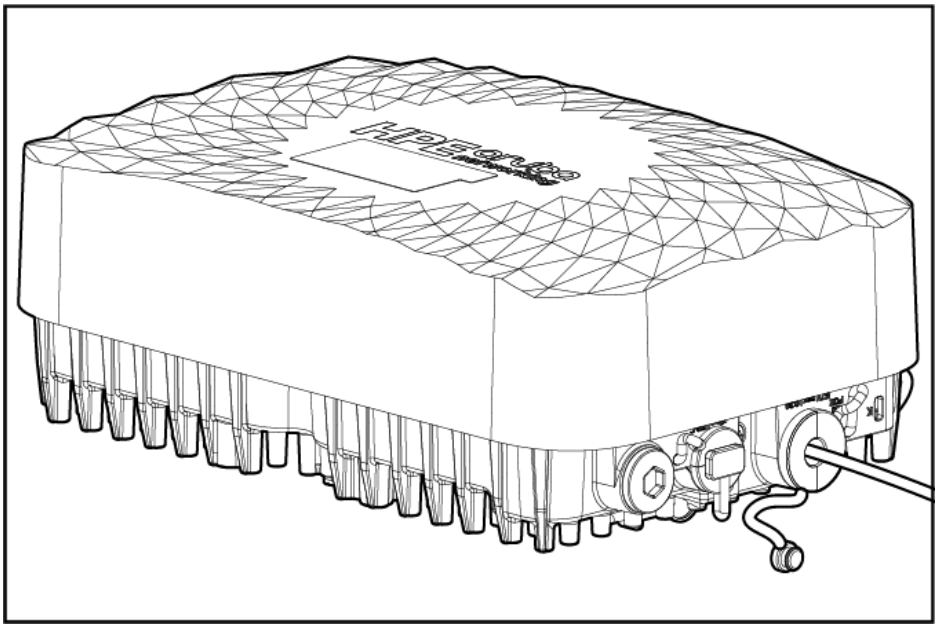

Connecting USB Cable for AP-763

To connect an USB cable to the AP-763 access point, perform the following steps.

1. Pull out the rubber plug.

   Figure 14 *Pulling Out the Rubber Plug*

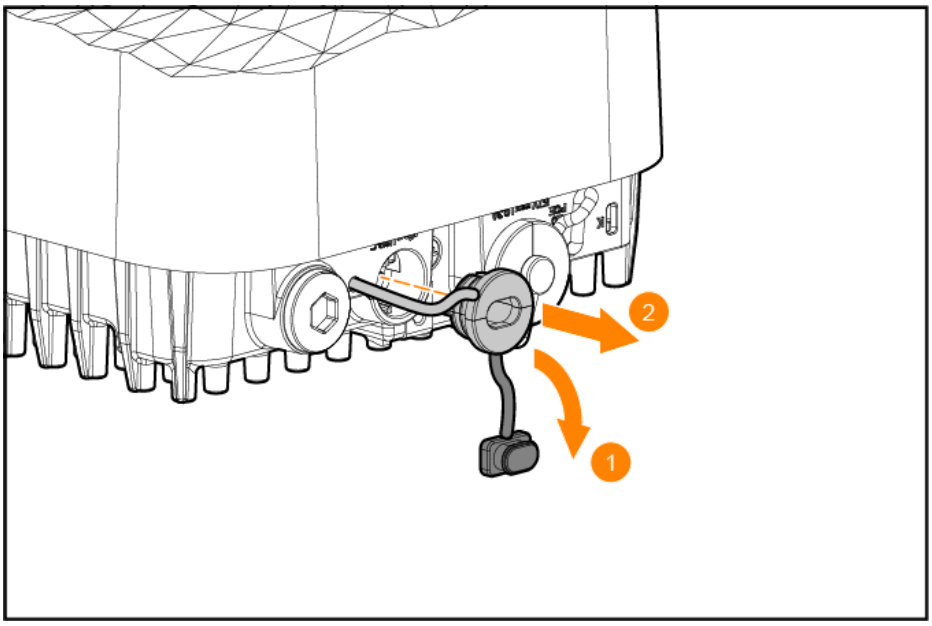

2. Insert the USB-C connector to the USB-C port on the AP.

Figure 15 *Inserting the USB-C connector to the USB-C Port*

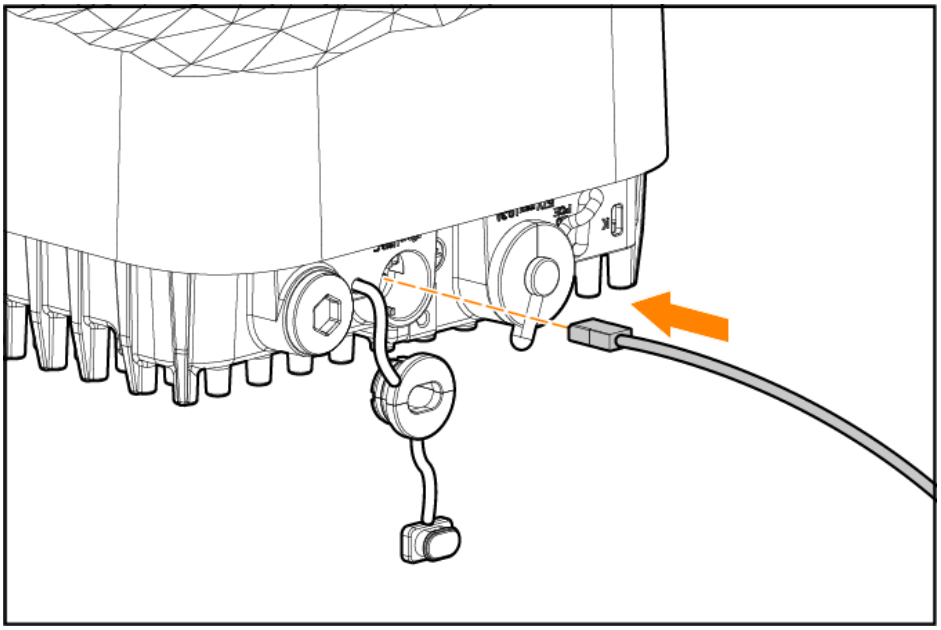

3. Seperate the dust cover in half and put it around the cable.

Figure 16 *Separating the Dust Cover in Half*

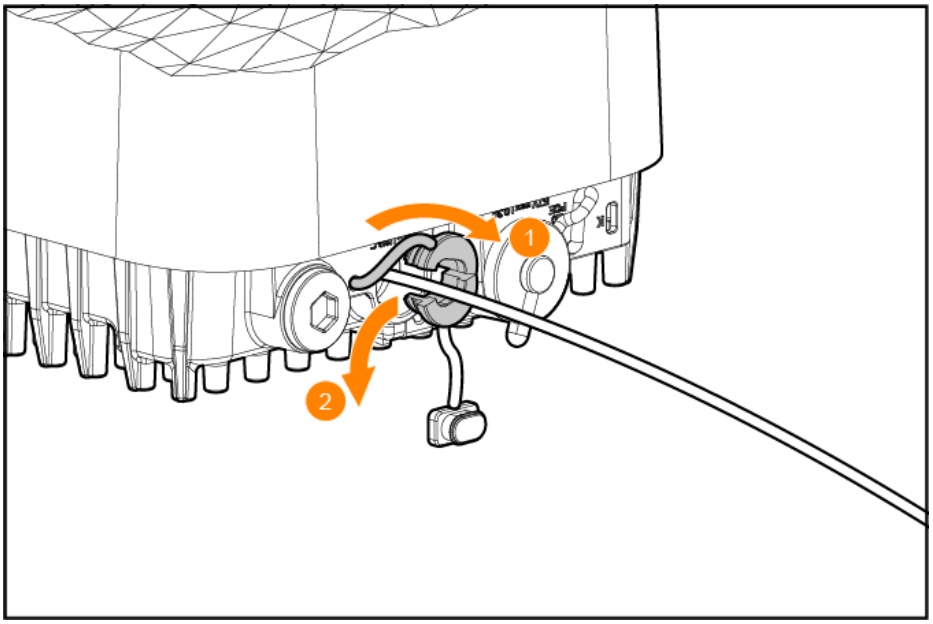

4. Push the dust cover into the USB-C port.

Figure 17 *Pushing the Dust Cover into the USB-C Port*

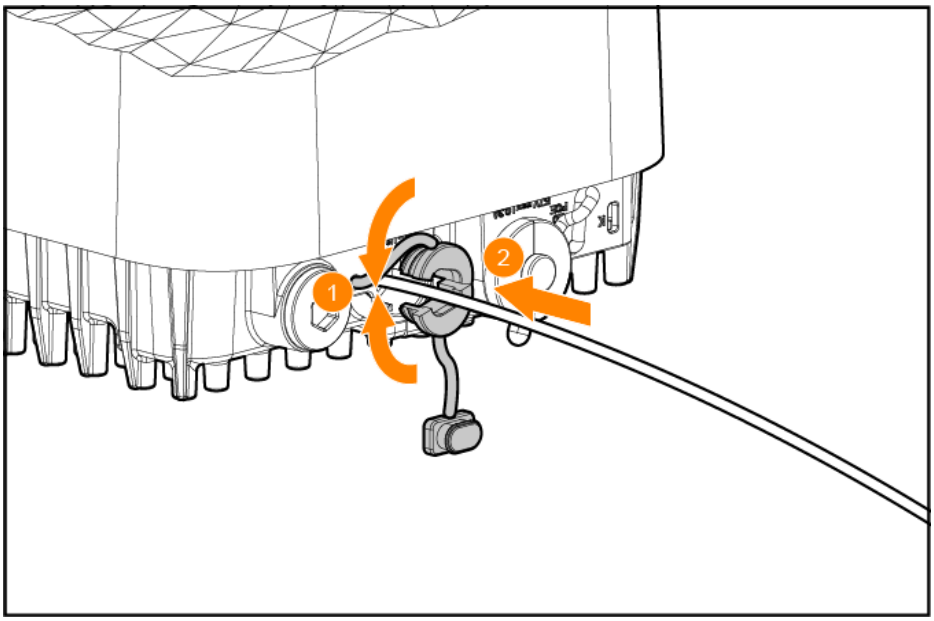

Figure 18 *USB-C Cable Connected to the AP*

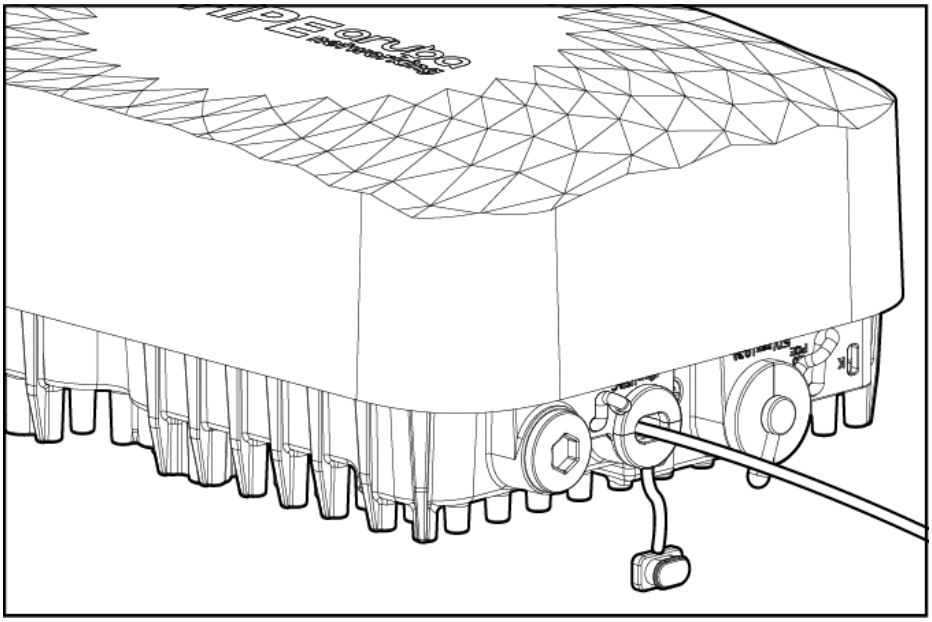

Replacing the dust covers for AP-763

The HPE Aruba Networking provide orderable replacement bag (Part number: S5B02A) for the dust covers used for the Ethernet or USB port on the AP-763 access point. To replace the dust covers, perform the following steps.

1. Remove the old dust covers if needed.
2. Push the rubber anchors into the holes to secure the tether on the access point.

Figure 19 *Pushing the Rubber Anchors into the Holes*

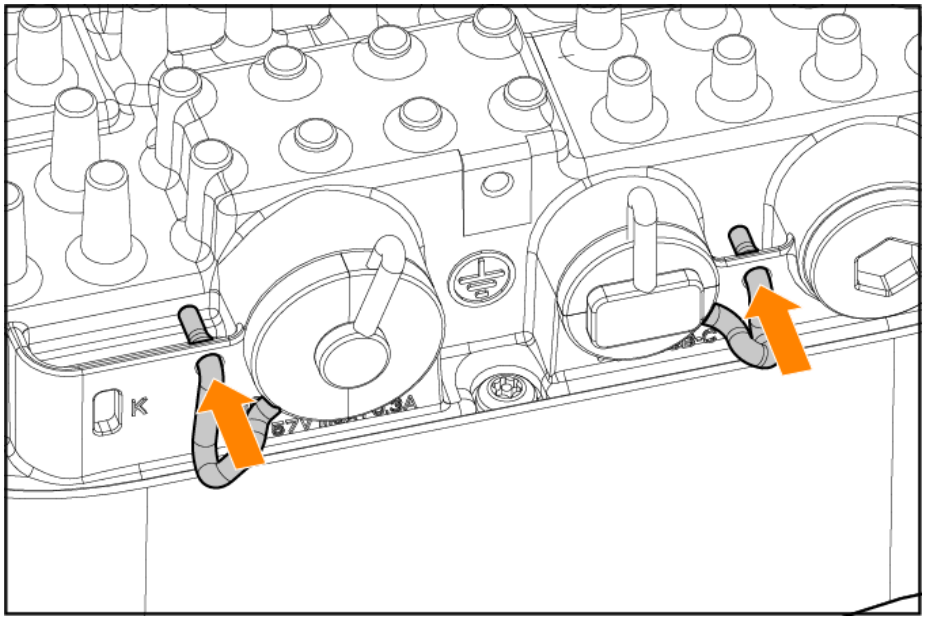

AP-764 and AP-765 Installation

The AP-764 and AP-765 access points can be installed on a wall or a pole by using a compatible mount kit. HPE Aruba Networking provides several mount kits to use with the AP-764 and AP-765 access points. These mount kits are available as accessories and must be ordered separately.

Table 6: *Mount Kits for AP-764 and AP-765 Access Points*

Part Number	Description	Installation Guide
R9H97A	AP-OUT-MNT-V1A long-arm wall or pole mount kit. it's usually for omni antenna and connectorized APs.	AP-OUT-MNT-V1A Installation Guide
JW053A	AP-270-MNT-V2 short-arm wall or pole mount kit. it's usually for omni antenna and connectorized APs.	AP-270-MNT-V2 Installation Guide
JW054A	AP-270-MNT-H1 articulating up-down wall or pole mount kit. It's usually for directional antenna APs	AP-270-MNT-H1 Installation Guide
JW055A	AP-270-MNT-H2 non-articulating wall mount for directional APs, or ceiling mount for omni antenna APs	AP-270-MNT-H2 Installation Guide
R6W11A	AP-270-MNT-H3 dual-articulating (up-down, left-right) for wall or pole mounting of directional APs, or ceiling mounting APs on uneven ceilings	AP-270-MNT-H3 Installation Guide

All HPE Aruba Networking access points should be professionally installed by a professional installer. The installer is responsible for ensuring that grounding is available and meets applicable national and electrical codes. Failure to properly install this product may result in physical injury and/or damage to property.

CAUTION

Tous les points d'accès HPE Aruba Networking doivent impérativement être installés par un professionnel agréé. Ce dernier doit s'assurer que l'appareil est mis à la terre et que le circuit de mise à la terre est conforme aux codes électriques nationaux en vigueur. Le fait de ne pas installer correctement ce produit peut entraîner des blessures corporelles et / ou des dommages matériels.

CAUTION

This AP-764 or AP-765 access point is intended for installation in a RESTRICTED ACCESS LOCATION attached to a pole or installed on a wall. Installers should disconnect power before working with or near the access point.

Grounding Access Point

Grounding the access point must be completed before powering up the AP. The ground wire should be #8 AWG.

1. Strip the insulating jacket off of one end of the ground wire and place the bare conductor into the ground lug (included in the package), then crimp the connection by pressing firmly with the crimping pliers.
2. Fasten the ground lug to the grounding point on the access point with the eye-bolt included in the package. A small fall arrest cable can also be secured on to the eye-bolt to prevent the access point falling from height.

Connecting Ethernet Cable for AP-764 and AP-765

To connect an Ethernet cable to the AP-764 or AP-765 access point, perform the following steps using the M20 cable gland.

CAUTION

Failure to use the included Ethernet cable gland can lead to connectivity and PoE issues.

NOTE

The Ethernet cable is not included and must be purchased separately. Purchase a suitable UV-resistant, outdoor rated, CAT 5E or better shielded cable for use with the access point.

1. Remove the dust cap from the Ethernet port.
2. Slide the sealing nut, clip, seals, gland body, and O-ring over the cable.
3. Insert the RJ45 connector to the Ethernet port on the AP.
4. Place the O-ring on the gland body, and ensure it is in place.

5. Thread the gland body into the Ethernet port, and tighten to a torque of 8.9 in/lbs (1.0 Nm).
6. Combine the two split seals over the cable, and place them on the gland body.
7. Move the clip towards the gland body, passing over the seals, until the clip properly fits into the gland body.
8. Tighten the sealing nut onto the gland body to a torque of 8.9 in/lbs (1.0 Nm).
9. Connect the other end of the Ethernet cable to a PoE port of a compliant PoE Injector or PoE switch.

Figure 20 *Ethernet Cable and M20 Cable Gland Assembly*

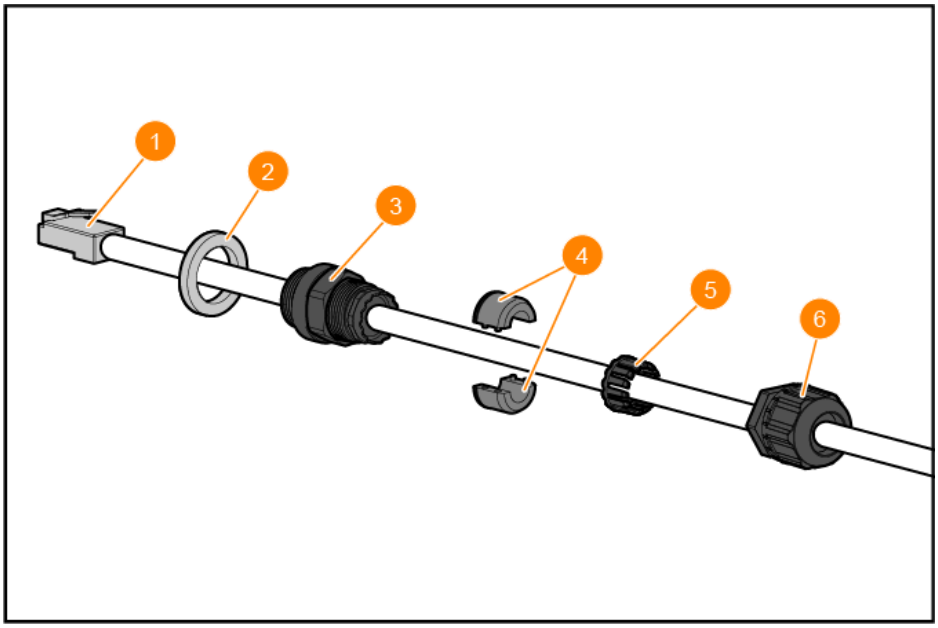

1	Ethernet Cable
2	O-ring
3	Gland Body
4	Seals
5	Clip
6	Sealing Nut

NOTE

Two sets of seals are provided in the package for use with the Ethernet cables. One is applicable for cables with 4-6 mm diameter, and the other is applicable for cables with 6-10 mm diameter.

Figure 21 *Ethernet Cable and M20 Cable Gland installed to AP*

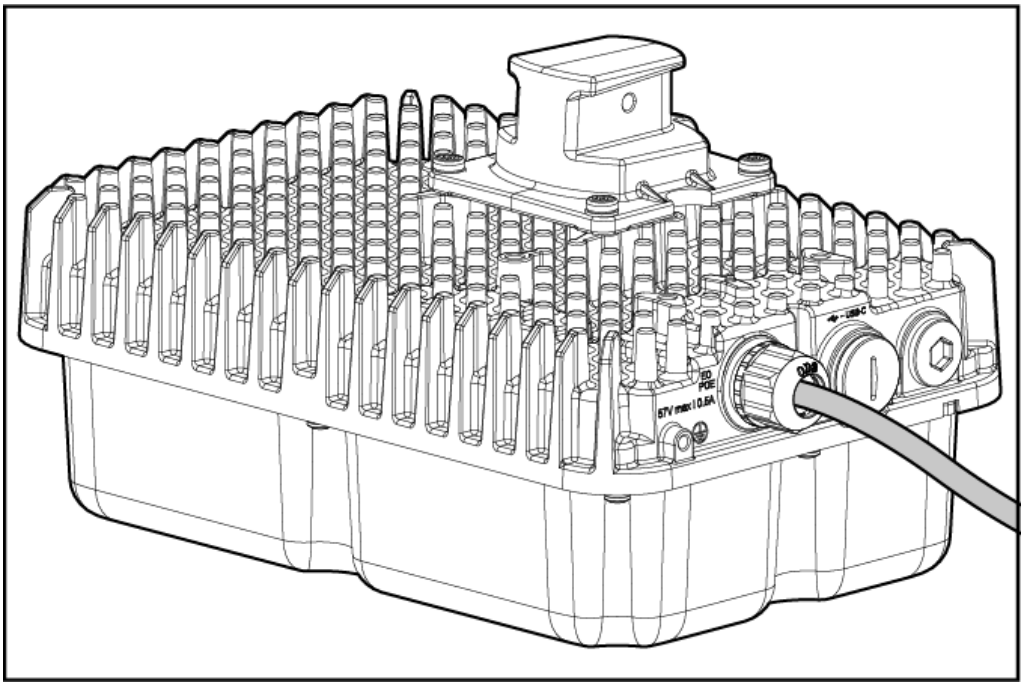

Software

For instructions on choosing operating modes and initial software configuration, refer to the AP Software Quick Start Guide .

CAUTION

HPE Aruba Networking access points are classified as radio transmission devices, and are subject to government regulations of the host country. The network administrator(s) is/are responsible for ensuring that configuration and operation of this equipment is in compliance with their country's regulations. For a complete list of approved channels in your country, refer to the HPE Aruba Networking Downloadable Regulatory Table.

Verifying Post-Installation Connectivity

The integrated LED on the access point can be used to verify that the access point access point is receiving power and initializing successfully (see Table 1-Table 2).

Chapter 4

Specifications, Safety, and Compliance

This chapter provides an overview of the HPE Aruba Networking 760 Series Ruggedized Access Points specifications, safety, and compliance information.

Specifications

Electrical

- Ethernet
  - E0 port: 100M/1G/2.5G/5G Base-T auto-sensing MDI/MDI-X wired network port (RJ45).
- Power
  - Power over Ethernet (PoE): 802.3at or 802.3bt compliant source

Environmental

- AP-763 and AP-764 Operating
  - Operating Temperature Range: -40°C to +55°C (-40°F to +131°F) (no solar loading with IPTM)
  - Operating Humidity Range: 5% to 93% (RH), non-condensing
- AP-765 Operating
  - Operating Temperature Range: -40°C to +55°C (-40°F to +131°F) (with solar loading)
  - Operating Temperature Range: -40°C to +65°C (-40°F to +149°F) (no solar loading with IPTM)
  - Operating Humidity Range: 5% to 93% (RH), non-condensing
- Storage
  - Storage Temperature Range: -40°C to +70°C (-40°F to +158°F)
  - Storage Humidity Range: 5% - 93% (RH), non-condensing

For additional specifications on this product, please refer to the HPE Aruba Networking 760 Series Ruggedized Access Points data sheet.

Regulatory Information

For the purpose of regulatory compliance certifications and identification, this product has been assigned a unique regulatory model number (RMN). The regulatory model number can be found on the product nameplate label, along with all required approval markings and information. When requesting compliance information for this product, always refer to this regulatory model number. The regulatory model number RMN is not the marketing name or model number of the product.

The following regulatory model number applies to the HPE Aruba Networking 760 Series Ruggedized Access Points:

- AP-763 RMN: APIN0763
- AP-764 RMN: APEX0764
- AP-765 RMN: APEX0765

Regulatory consideration for AP-764: AP-764 will be offered in countries where there is an existing or clear and defined path to allow operation of 6GHz radios with external connectorized antennas, either as a Low Power Indoor (LPI) or Standard Power (SP) product. Please contact your HPE Aruba Networking representative to confirm (existing or planned) availability for the country where the AP will be deployed.

Medical

1. Equipment not suitable for use in the presence of flammable mixtures.
2. Connect to only IEC 62368-1 or IEC 60601-1 certified products and power sources. The end user is responsible for the resulting medical system complies with the requirements of IEC 60601-1.
3. Wipe with a dry cloth, no additional maintenance required.
4. No serviceable parts, the unit must be sent back to the manufacturer for repair.
5. No modifications are allowed without approval from HPE Aruba Networking.

CAUTION

- Use of this equipment adjacent to or stacked with other equipment should be avoided because it could result in improper operation. If such use is necessary, this equipment and the other equipment should be observed to verify that they are operating normally.
- Use of accessories, transducers and cables other than those specified or provided by the manufacturer of this equipment could result in increased electromagnetic emissions or decreased electromagnetic immunity of this equipment and result in improper operation.
- Portable RF communications equipment (including peripherals such as antenna cables and external antennas) should be used no closer than 30 cm (12 inches) to any part of the access point. Otherwise, degradation of the performance of this equipment could result.

Brazil

Este equipamento não tem direito à proteção contra interferência prejudicial e não pode causar interferência em sistemas devidamente autorizados.

O uso deste equipamento é restrito a ambientes fechados e proibido em plataformas petrolíferas, carros, trens, embarcações e no interior de aeronaves abaixo de 3.048 m (10.000 pés).

Para mais informações, consulte o site da Anatel: https://www.gov.br/anatel/pt-br

Canada

Innovation, Science and Economic Development Canada

This Class B digital apparatus meets all of the requirements of the Canadian Interference-Causing Equipment Regulations.

This device contains licence-exempt transmitter(s)/receiver(s) that comply with Innovation, Science and Economic Development Canada's licence-exempt RSS(s). Operation of this device is subject to the following two conditions: (1) this device may not cause interference, and (2) this device must accept any interference, including interference that may cause undesired operation.

When operated in the 5.15 to 5.25 GHz frequency range, this device is restricted to indoor use to reduce the potential for harmful interference with co-channel Mobile Satellite Systems.

CAUTION

- Changes or modifications not expressly approved by the party responsible for compliance could void the user's authority to operate this equipment.
- RF Radiation Exposure Statement: This equipment complies with RF radiation exposure limits. This equipment should be installed and operated with a minimum distance of 12.99 inches (33 cm) between the radiator and your body for 2.4 GHz, 5 GHz, and 6GHz operations. This transmitter must not be co-located or operating in conjunction with any other antenna or transmitter.

For APIN0763:

- Operation shall be limited to indoor use only when the device operates in LPI mode.
- Operation on oil platforms, cars, trains, boats, and aircraft shall be prohibited except for on large aircraft flying above 10,000 feet.
- Devices shall not be used for control of or communications with unmanned aircraft systems.

For APEX0764 and APEX0765:

- The antenna height shall be determined by the installer or operator of the standard-power access point (only when operate in Standard Power Mode).
- Operation on oil platforms, cars, trains, boats, and aircraft shall be prohibited except for on large aircraft flying above 10,000 feet.
- Devices shall not be used for control of or communications with unmanned aircraft systems.

This radio transmitter of the model APEX0764 approved by Innovation, Science and Economic Development Canada to operate with the antenna types listed below, with the maximum permissible gain indicated. Antenna types not included in this list that have a gain greater than the maximum gain indicated for any type listed are strictly prohibited for use with this device.

Antenna	SKU	Gain (2.4/5/6 GHz in dBi)	Impedance
AP-ANT-311	S1F79A	3.0/6.0/6.0	50 ohm

Antenna	SKU	Gain (2.4/5/6 GHz in dBi)	Impedance
AP-ANT-312	S1F80A	3.3/3.3/4.1	50 ohm
AP-ANT-312F	S6A17A	4.2/2.9/5.0	50 ohm
AP-ANT-313	S1F81A	3.0/6.0/6.0	50 ohm
AP-ANT-325	S1F86A	6.1/6.1/5.4	50 ohm
AP-ANT-328	S1F87A	7.5/8.0/8.0	50 ohm
eANT-2x2-56O-10	S0P65A	NA/7.0/7.1	50 ohm
eANT-2x2-56D30-14	S0P66A	NA/11.0/11.5	50 ohm
eANT-2x2-256D60-7	S5A98A	7.1/7.2/7.2	50 ohm
ANT-2x2-256O-6	S2H56A	3.0/6.0/6.0	50 ohm

Innovation, Sciences et Développement économique

Cet appareil numérique de Classe B répond à toutes les exigences de la réglementation canadienne sur le matériel brouilleur.

Cet appareil contient des émetteurs / récepteurs exemptés de licence qui sont conformes aux RSS exempts de licence d'Innovation, Sciences et Développement économique Canada. Son fonctionnement est soumis aux deux conditions suivantes: (1) ce périphérique ne doit pas provoquer d'interférences, et (2) ce périphérique doit accepter toute interférence, y compris les interférences susceptibles de provoquer un dysfonctionnement.

Pour un fonctionnement dans la bande de fréquences comprises entre 5,15 et 5,25 GHz, son utilisation est limitée à un environnement intérieur afin de réduire la possibilité d'interférences nuisibles avec les systèmes mobiles par satellite opérant sur le même canal.

CAUTION

- Toute modification effectuée sur cet équipement sans l'autorisation expresse de la partie responsable de la conformité est susceptible d'annuler son droit d'utilisation.
- Déclaration de la concernant l'exposition aux rayonnements à fréquence radioélectrique (FR): Cet appareil est conforme aux limites d'exposition aux rayonnements FR établies. Il doit être installé et utilisé à une distance minimale de 33 cm (12,99 pouces) entre le radiateur et votre corps. Cet émetteur ne doit pas être installé ou utilisé à proximité immédiate d'une autre antenne ni d'un autre transmetteur.

APIN0763:

- Le fonctionnement est restreint à une utilisation à l'intérieur seulement.
- L'utilisation sur les plateformes pétrolières ou dans les voitures, les trains, les bateaux et les avions est interdite, à l'exception des gros avions volant à plus de 3 km (10 000 pi).
- Cet appareil ne doit pas être utilisé pour le contrôle ou pour la communication avec des systèmes de drones.

APEX0764 et APEX0765

- La hauteur de l'antenne doit être déterminée par l'installateur ou l'exploitant du point d'accès de puissance standard (uniquement lorsqu'il fonctionne en mode puissance standard).
- L'utilisation sur les plateformes pétrolières ou dans les voitures, les trains, les bateaux et les avions est interdite, à l'exception des gros avions volant à plus de 3 km (10 000 pi).
- Cet appareil ne doit pas être utilisé pour le contrôle ou pour la communication avec des systèmes de drones.

Ce modèle d'émetteur radio APEX0764 été approuvé par Innovation, Sciences et Développement économique Canada pour fonctionner avec les types d'antennes répertoriés ci-dessous, avec le gain maximum autorisé indiqué. Les types d'antennes non inclus dans cette liste qui ont un gain supérieur au gain maximum indiqué pour tout type répertorié sont strictement interdits pour une utilisation avec cet appareil.

Antenne	SKU	Gagner (2.4/5/6 GHz in dBi)	Impédance
AP-ANT-311	S1F79A	3.0/6.0/6.0	50 ohm
AP-ANT-312	S1F80A	3.3/3.3/4.1	50 ohm
AP-ANT-312F	S6A17A	4.2/2.9/5.0	50 ohm
AP-ANT-313	S1F81A	3.0/6.0/6.0	50 ohm
AP-ANT-325	S1F86A	6.1/6.1/5.4	50 ohm
AP-ANT-328	S1F87A	7.5/8.0/8.0	50 ohm
eANT-2x2-56O-10	S0P65A	NA/7.0/7.1	50 ohm
eANT-2x2-56D30-14	S0P66A	NA/11.0/11.5	50 ohm
eANT-2x2-256D60-7	S5A98A	7.1/7.2/7.2	50 ohm
ANT-2x2-256O-6	S2H56A	3.0/6.0/6.0	50 ohm

European Union

The Declaration of Conformity made under Radio Equipment Directive 2014/53/EU is available for viewing below. Select the document that corresponds to your device's model number as it is indicated on the product label.

EU Declaration of Conformity

Compliance is only assured if the HPE Aruba Networking approved accessories as listed in the ordering guide are used.

This device is limited for indoor use. Use in trains with metal-coated windows (or similar structures made of materials with comparable attenuation characteristic) and aircraft is permitted. Operations in the 6GHz band are blocked by firmware for some countries pending adoption of spectrum. Refer to HPE Aruba Networking DRT release notes for details.

Wireless Channel Restrictions

5150-5350MHz band & 5945-6425MHz bands are limited to indoor only in the following countries; Austria (AT), Belgium (BE), Bulgaria (BG), Croatia (HR), Cyprus (CY), Czech Republic (CZ), Denmark (DK), Estonia (EE), Finland (FI), France (FR), Germany (DE), Greece (GR), Hungary (HU), Iceland (IS), Ireland (IE), Italy (IT), Latvia (LV), Liechtenstein (LI), Lithuania (LT), Luxembourg (LU), Malta (MT), Netherlands (NL), Norway (NO), Poland (PL), Portugal (PT), Romania (RO), Serbia (RS), Slovakia (SK), Slovenia (SL), Spain (ES), Sweden (SE), Switzerland (CH), Turkey (TR), United Kingdom (UK (NI)).

Radio	Frequency Range	Max EIRP
BLE/Zigbee	2402-2480 MHz	10 dBm
Wi-Fi	2412-2472 MHz	20 dBm
	5150-5250 MHz	23 dBm
	5250-5350 MHz	23 dBm
	5470-5725 MHz	30 dBm
	5725-5850 MHz	14 dBm
	5945-6425 MHz (AP-763 only)	23 dBm

CE

HPE, Postfach 0001,1122 Wien, Austria

United Kingdom

The compliance with United Kingdom's Radio Equipment Regulations 2017/UK is addressed by compliance with the EU Radio Equipment Directive 2014/53/EU.

India

This product conforms to the relevant Essential Requirements of TEC, Department of Telecommunications, Ministry of Communications, Govt of India, New Delhi-110001

Mexico

La operación de este equipo está sujeta a las siguientes dos condiciones:

(1) es posible que este equipo o dispositivo no cause interferencia perjudicial y

(2) este equipo o dispositivo debe aceptar cualquier interferencia, incluyendo la que pueda causar su operación no deseada.

Para el APEX0764

Este equipo ha sido diseñado para operar con las antenas que enseguida se enlistan:

Antenas	SKU	Ganancia (2.4/5/6 GHz in dBi)	Impedancia
AP-ANT-311	S1F79A	3.0/6.0/6.0	50 ohm
AP-ANT-312	S1F80A	3.3/3.3/4.1	50 ohm
AP-ANT-312F	S6A17A	4.2/2.9/5.0	50 ohm
AP-ANT-313	S1F81A	3.0/6.0/6.0	50 ohm
AP-ANT-325	S1F86A	6.1/6.1/5.4	50 ohm
AP-ANT-328	S1F87A	7.5/8.0/8.0	50 ohm
eANT-2x2-56O-10	S0P65A	NA/7.0/7.1	50 ohm
eANT-2x2-56D30-14	S0P66A	NA/11.0/11.5	50 ohm
eANT-2x2-256D60-7	S5A98A	7.1/7.2/7.2	50 ohm
ANT-2x2-256O-6	S2H56A	3.0/6.0/6.0	50 ohm

y para una ganancia máxima de antenna de 11.5 dBi.

Queda prohibido el uso con este equipo de antenas no incluidas en esta lista o que tengan una ganancia superior a 11.5 dBi. La impedancia requerida de la antena es de 50 ohmios.

EAC

Нормативные требования Евразийского Экономического Союза

ТОО «Хьюлетт-Паккард (К)», Республика Казахстан, 050040, г. Алматы, Бостандыкский район, проспект Аль-Фараби, 77/7, Телефон/факс: + 7 727 355 35 50

ЖШС «Хьюлетт-Паккард (К)», Қазақстан Республикасы, 050040, Алматы к., Бостандык ауданы, Әл-Фараби даңғылы, 77/7, Телефон/факс: +7 727 355 35 50

Taiwan

取得審驗證明之低功率射頻器材，非經核准，公司、商號或使用者均不得擅自變更頻率、加大功率或變更原設計之特性及功能。

低功率射頻器材之使用不得影響飛航安全及干擾合法通信；經發現有干擾現象時，應立即停用，並改善至無干擾時方得繼續使用。前述合法通信，指依電信管理法規定作業之無線電通信。低功率射頻器材須忍受合法通信或工業、科學及醫療用電波輻射性電機設備之干擾。

應避免影響附近雷達系統之操作。

高增益指向性天線只得應用於固定式點對點系統

電波功率密度MPE 標準值：1 mW/cm^2，送測產品實測值：__ mW/cm^2，建議使用時設備天線至少距離人體 20 公分

報驗義務人(Applicant):慧與科技股份有限公司

地址(Address):11568 台北市南港區經貿二路66號10樓之1

電話(TEL): (02) 2652-8700

Ukraine

Hereby, Hewlett Packard Enterprise declares that the radio equipment type [The Regulatory Model Number [RMN] for this device can be found in the Regulatory Model Name section of this document] is in compliance with Ukrainian Technical Regulation on Radio Equipment, approved by resolution of the CABINET OF MINISTERS OF UKRAINE dated May 24, 2017, No. 355. The full text of the UA declaration of conformity is available at the following internet address: https://certificates.ext.hpe.com.

Х'ЮЛЕТТ ПАКАРД ЕНТЕРПРАЗ, 6280 АМЕРИКА ЦЕНТР Д-Р, САН-ХОСЕ, КАЛІФОРНІЯ 95002, США

United States

This equipment has been tested and found to comply with the limits for a Class B digital device, pursuant to Part 15 of the FCC Rules. These limits are designed to provide reasonable protection against harmful interference in a residential installation. This equipment generates, uses and can radiate radio frequency energy and, if not installed and used in accordance with the manufacturer's instructions, may cause harmful interference to radio communications. However, there is no guarantee that interference will not occur in a particular installation. If this equipment does cause harmful interference to radio or television reception, which can be determined by turning the equipment off and on, the user is encouraged to try to correct the interference by one or more of the following measures:

- Reorient or relocate the receiving antenna.
- Increase the separation between the equipment and receiver.
- Connect the equipment to an outlet on a circuit different from that to which the receiver is connected.
- Consult the dealer or an experienced radio or TV technician for help.

Improper termination of access points installed in the United States configured to a non-US model controller is a violation of the FCC grant of equipment authorization. Any such willful or intentional violation may result in a requirement by the FCC for immediate termination of operation and may be subject to forfeiture (47 CFR 1.80).

This device complies with part 15 of the FCC Rules. Operation is subject to the following two conditions:

(1) This device may not cause harmful interference.

(2) this device must accept any interference received, including interference that may cause undesired operation.

The network administrator(s) is/are responsible for ensuring that this device operates in accordance with local/regional laws of the host domain.

- FCC regulations restrict the operation of this device to indoor use only for AP-763 when operating LPI.
- The operation of this device is prohibited on oil platforms, cars, trains, boats, and aircraft, except that operation of this device is permitted in large aircraft while flying above 10,000 feet, only in the 5.925 - 6.425 GHz band.
- Operation in the 5.925-7.125 GHz band is prohibited for control of or communication with unnamed aircraft systems.
- Changes or modifications not expressly approved by the party responsible for compliance could void the user's authority to operate this equipment.
- RF Radiation Exposure Statement: This equipment complies with RF radiation exposure limits. This equipment should be installed and operated with a minimum distance of 12.99 inches (33 cm) between the radiator and your body. This transmitter must not be co-located or operating in conjunction with any other antenna or transmitter.

Proper Disposal of HPE Aruba Networking Equipment

HPE Aruba Networking equipment complies with countries' national laws for proper disposal and electronic waste management.

Waste of Electrical and Electronic Equipment

HPE Aruba Networking, a Hewlett Packard Enterprise company products at end of life are subject to separate collection and treatment in the EU Member States, Norway, and Switzerland and therefore are marked with the symbol shown at the left (crossed-out wheelie bin). The treatment applied at end of life of these products in these countries shall comply with the applicable national laws of countries implementing Directive 2012/19/EU on Waste of Electrical and Electronic Equipment (WEEE).

European Union RoHS

Hewlett Packard Enterprise (HPE) products comply with all applicable substance restriction requirements under European Union's Restriction of Hazardous Substances in Electrical and Electronic Equipment (RoHS) Directive (2011/65/EC) as amended. For Hewlett Packard Enterprise product environmental and safety information and compliance data, including RoHS, see: https://www.hpe.com/info/ecodata.

India RoHS

This product complies with the "India E-waste (Management) Rules, 2016" and prohibits use of lead, mercury, hexavalent chromium, polybrominated biphenyls or polybrominated diphenyl ethers in concentrations exceeding 0.1 weight % and 0.01 weight % for cadmium, except for the exemptions set in Schedule II of the Rule.

China RoHS

HPE Aruba Networking products also comply with China environmental declaration requirements and are labeled with the "EFUP 50" label shown at the left.

产品中有害物质的名称及含量
根据中国《电器电子产品有害物质限制使用管理办法》

部件名称	限用物质及其化学符号					
	铅 (Pb)	汞 (Hg)	镉(Cd)	六价铬 (Cr(VI))	多溴联苯 (PBB)	多溴二苯醚 (PBDE)
电池	O	O	O	O	O	O
传输线和网路线	O	O	O	O	O	O
断路器	X	O	O	O	O	O
冷却 & 加热系统	O	O	O	O	O	O
磁盘控制器	X	O	O	O	O	O
外部机箱	X	O	O	O	O	O
风扇	O	O	O	O	O	O
液晶显示器	X	O	O	O	O	O
硬盘(HDD)	X	O	O	O	O	O
液压 / 气压系统	O	O	O	O	O	O
键盘	O	O	O	O	O	O
介质（CD/DVD/光盘驱动器）	O	O	O	O	O	O
记忆体	O	O	O	O	O	O
鼠标	O	O	O	O	O	O
其他机械组装设备	X	O	O	O	O	O
电源/电源适配器	X	O	O	O	O	O
印刷电路组件 (PCAs)	X	O	O	O	O	O
天线	X	O	O	O	O	O

本表格依据 SJ/T 11364 的规定编制

O：表示该有害物质在该部件所有均质材料中的含量均在 GB/T 26572 规定的限量要求以下

X：表示该有害物质至少在该部件的某一均质材料中的含量超出 GB/T 26572 规定的限量要求

此表中所有名称中含 "X" 的部件均符合欧盟 RoHS 立法

注：环保使用期限的参考标识取决于产品正常工作的温度和湿度等条

除非另有标明，此电子电器产品有害物质限制使用(EPUP)
标签适用于所有慧与公司服务器，网络，存储设备

Taiwan RoHS

Taiwan RoHS Hazardous Substances table

台灣限用物質含有情況標示

單元	限用物質及其化學符號					
	鉛 (Pb)	汞 (Hg)	鎘 (Cd)	六價鉻 (Cr^{+6})	多溴聯苯 (PBB)	多溴二苯醚 (PBDE)
傳輸線和線材	O	O	O	O	O	O
外殼	—	O	O	O	O	O
記憶體	O	O	O	O	O	O
其他機械組裝設備	—	O	O	O	O	O
印刷電路零組件 (PCAs)	—	O	O	O	O	O
斷路器 (選配)	—	O	O	O	O	O
冷卻及加熱系統(選配)	O	O	O	O	O	O
風扇(選配)	O	O	O	O	O	O
存取裝置(HDD) (選配)	—	O	O	O	O	O
讀寫元件（CD/DVD/ 磁碟機）(選配)	—	O	O	O	O	O
變壓器/電源供應器(選配)	—	O	O	O	O	O
備考1. 〝O〞係指該項限用物質之百分比含量未超出百分比含量基準值。 備考2. 〝—〞係指該項限用物質為排除項目。						

選配單元使用於特定產品型號，詳細規格請參照產品說明書。

Turkey RoHS material content declaration

Türkiye Cumhuriyeti: AEEE Yönetmeliğine Uygundur