AP-228 Wireless Access Point

Installation Guide

The Aruba AP-228 is a fully temperature hardened, water resistant, indoor rated, dual-radio IEEE 802.11ac wireless access point. This access point use MIMO (Multiple-in, Multiple-out) technology and other high-throughput mode techniques to deliver high-performance, 802.11ac 2.4 GHz and 5 GHz functionality while simultaneously supporting existing 802.11a/b/g/n wireless services. The AP-228 access point works only in conjunction with an Aruba Controller.

AP-228 Operations

- Wireless transceiver
- Wireless access point (IEEE 802.11 a/b/g/n/ac)
- Wireless air monitor (IEEE 802.11 a/b/g/n/ac)
- Protocol-independent networking functionality
- Compatibility with IEEE 802.3at PoE
- Central management configuration and upgrades with an Aruba Controller.

Guide Overview

- "AP-228 Hardware Overview" on page 3 provides a detailed hardware overview of the AP-228.
- "Before You Begin" on page 5 provides key questions to ask and items to consider when deploying a wireless network.
- "Installing the AP" on page 7 describes the multi-step process for a successful installation and deployment of the AP-228.
- "Safety and Regulatory Compliance" on page 12 provides an overview of safety and regulatory compliance information.

Package Contents

- AP-228 Access Point
- Cable Glands x2
- USB Console Cable
- Copper Lug x1
- M4 x 6 Screw x1
- Installation Guide (this document)

NOTE

The weatherproof caps for Ethernet and Console interfaces are connected to the AP, not loose in the package.

NOTE

Mounting kits for use with the AP-228 access points are sold separately. Contact your Aruba sales representative for details.

NOTE

Inform your supplier if there are any incorrect, missing, or damaged parts. If possible, retain the carton, including the original packing materials. Use these materials to repack and return the unit to the supplier if needed.

AP-228 Hardware Overview

Figure 1 *AP-228 Front View*

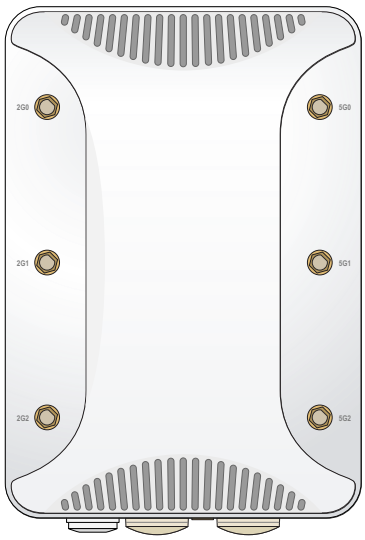

Figure 2 *AP-228 Bottom View*

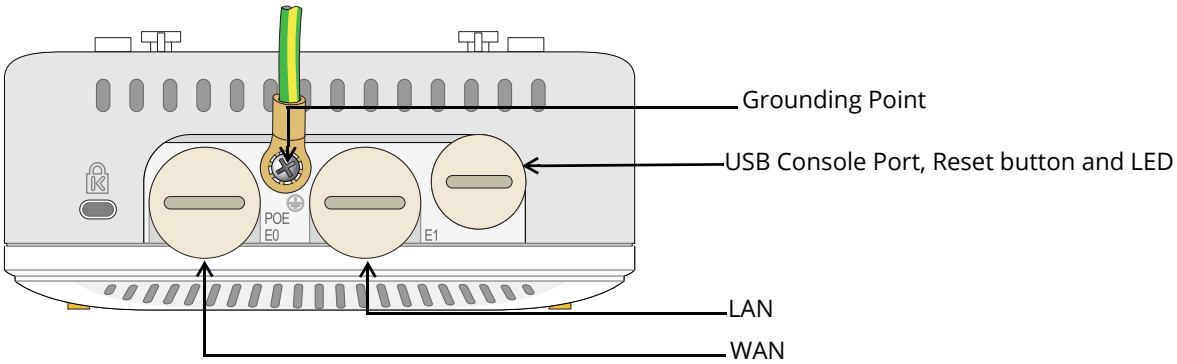

LED

The AP-228 is equipped with one LED that indicates the system status of the AP.

Table 1 *AP-228 LED Meanings during Boot Up*

LED	Color/State	Meaning
System LED	Off	No power to AP
	Red	Initial power-up
	Green - Flashing	AP booting
	Green - Steady	AP ready and 1000Mbps Ethernet link established. The LED turns off after 1200 seconds
	Green - Yellow, 6 seconds period	AP ready and 10/100Mbps Ethernet link established. The LED turns off after 1200 seconds

Table 2 *AP-228 LED Meanings during Operation*

LED	Color/State	Meaning
System LED	Solid Red	General fault
	One blink off every 3 seconds	Radio 0 fault (5 GHz)
	Two quick blink off 0.5 seconds apart cycled every 3 seconds	Radio 1 fault (2.4GHz)

USB Console Port

The USB Micro-B console port allows you to connect the AP to a terminal or a laptop for direct local management. Use the included USB console cable to connect the AP. You can download the necessary driver for USB-UART adapter from support.arubanetworks.com under the **Tools & Resources** tab.

Use the following setting to access the terminal:

Table 3 *Console Settings*

Baud Rate	Data Bits	Parity	Stop Bits	Flow Control
9600	8	None	1	None

Ethernet Ports

AP-228 is equipped with two10/100/1000Base-T (RJ-45) Gigabit Ethernet ports (WAN and LAN port) for wired network connectivity. The WAN port supports 802.3at Power over Ethernet (PoE), accepting 48 VDC (nominal) as a standard defined Powered Device (PD) from a Power Sourcing Equipment (PSE) such as a PoE midspan injector.

These ports have RJ-45 female connectors with the pin-outs shown in Figure 3.

Figure 3 *Gigabit Ethernet Port Pin-Out*

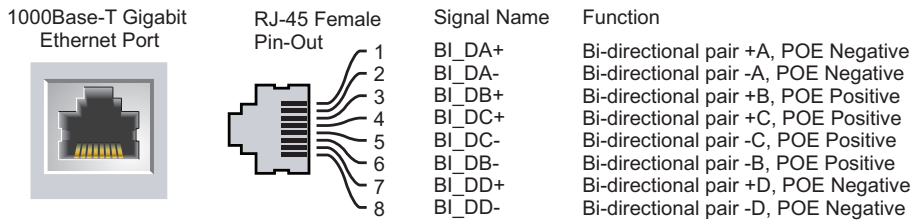

Reset Button

The reset button can be used to return the AP to factory default settings. To reset the AP:

1. Power off the AP.
2. Press and hold the reset button using a small, narrow object, such as a paperclip.
3. Power-on the AP without releasing the reset button. The system LED will flash within 5 seconds.
4. Release the reset button.

The system LED will flash again within 15 seconds indicating that the reset is completed. The AP will now continue to boot with the factory default settings.

Grounding Point

Always remember to protect the AP by installing grounding lines. The ground connection must be complete before connecting power to the AP enclosure.

Figure 4 *AP-228 Rear View*

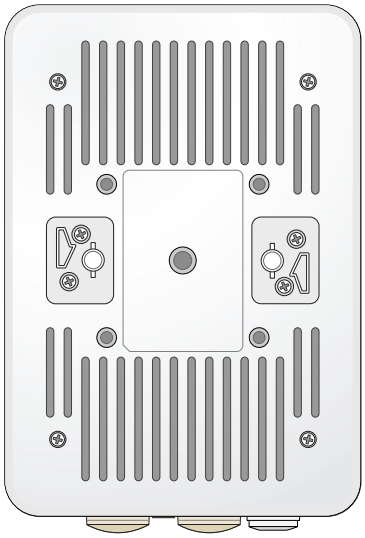

Before You Begin

CAUTION

FCC Statement: Improper termination of access points installed in the United States configured to non-US model controllers will be in violation of the FCC grant of equipment authorization. Any such willful or intentional violation may result in a requirement by the FCC for immediate termination of operation and may be subject to forfeiture (47 CFR 1.80).

CAUTION

EU Statement:
Lower power radio LAN product operating in 2.4 GHz and 5 GHz bands. Please refer to the *ArubaOS User Guide* for details on restrictions.

Produit réseau local radio basse puissance operant dans la bande fréquence 2.4 GHz et 5 GHz. Merci de vous referrer au *ArubaOS User Guide* pour les details des restrictions.

Low Power FunkLAN Produkt, das im 2.4 GHz und im 5 GHz Band arbeitet. Weitere Informationen bezlüglich Einschränkungen finden Sie im *ArubaOS User Guide.*

Apparati Radio LAN a bassa Potenza, operanti a 2.4 GHz e 5 GHz. Fare riferimento alla *ArubaOS User Guide* per avere informazioni detagliate sulle restrizioni.

CAUTION

To meet regulatory restrictions, the access point must be professionally installed.

Pre-Installation Network Requirements

After WLAN planning is complete and the appropriate products and their placement have been determined, the Aruba controller(s) must be installed and initial setup performed before the Aruba APs are deployed.

For initial setup of the controller, refer to the *ArubaOS Quick Start Guide* for the software version installed on your controller.

Pre-Installation Checklist

Before installing your AP, be sure that you have the items listed below:

- Gigabit Ethernet cable of required length
- IEEE 802.3at compliant PoE source
- Aruba Mobility Controller configured and installed on the network
- Layer 2/3 network connectivity to your AP
- One of the following network services:
  - Aruba Discovery Protocol (ADP)
  - DNS server with an “A” record
  - DHCP Server with vendor specific options

NOTE

Aruba Networks, Inc. in compliance with governmental requirements, has designed the AP-228 such that only authorized network administrators can change configuration settings. For more information about AP configuration, refer to the ArubaOS Quick Start Guide and ArubaOS User Guide.

CAUTION

Access points are radio transmission devices and as such are subject to governmental regulation. Network administrators responsible for the configuration and operation of access points must comply with local broadcast regulations. Specifically, access points must use channel assignments appropriate to the location in which the access point will be used.

Verifying Pre-Installation Connectivity

Before you install APs in a network environment, make sure that the APs will be able to locate and connect to the controller when they are powered on.

Specifically, you must verify the following conditions:

- When connected to the network, each AP is assigned a valid IP address.
- APs can locate the controller.

Refer to the *ArubaOS Quick Start Guide* for instructions on locating and connecting to the controller.

Identifying Specific Installation Locations

Use the AP placement map generated by Aruba’s RF Plan software application to determine the proper installation location(s). Each location should be as close as possible to the center of the intended coverage area and should be free from obstructions or obvious sources of interference. These RF absorbers/reflectors/interference sources will impact RF propagation and should have been accounted for during the planning phase and adjusted for in RF plan.

Identifying Known RF Absorbers/Reflectors/Interference Sources

Identifying known RF absorbers, reflectors, and interference sources while in the field during the installation phase is critical. Make sure that these sources are taken into consideration when you attach an AP to its fixed location. Examples of sources that degrade RF performance include:

- Cement and brick
- Objects that contain water

- Metal
- Microwave ovens
- Wireless phones and headsets

Installing the AP

NOTE

Service to all Aruba products should be performed by trained service personnel only.

Using the AP-220-MNT-W1 Mount Kit

The AP-228 access point can be installed on a wall by using AP-220-MNT-W1 mount kit.

NOTE

The AP-228 access point does not ship with any mount kit. The AP-220-MNT-W1 mount kit is available as accessories and must be ordered separately.

NOTE

For details on AP-220-MNT-W1, please refer to the *AP-220-MNT-W1 Installation Guide*.

1. Begin by attaching the wall mount adapter to the wall.
   a. Install any necessary wall anchors. Wall anchors are not included in this kit.
   b. Align the screw holes in the mounting bracket with the previously installed anchors or demarcated screw points.
   c. Insert the screws to secure the mounting bracket. Screws are not included in this kit.

Figure 5 *Attaching the Adapter to a Wall*

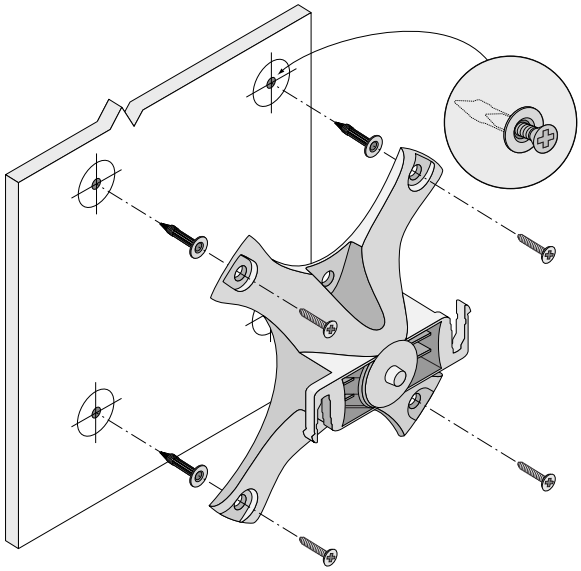

Figure 6 *Attaching the Adapter to a Wall (Alternate)*

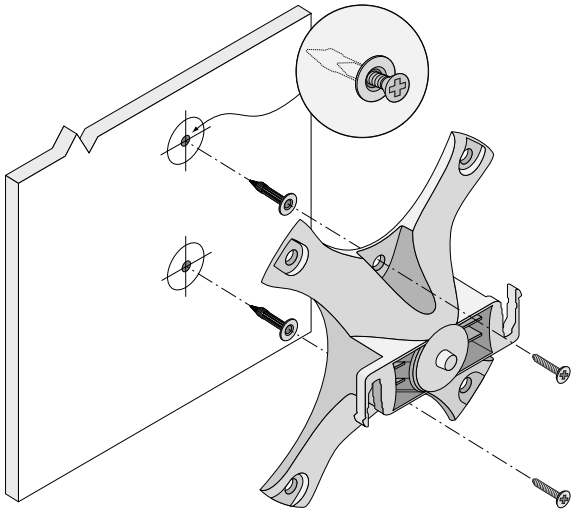

2. Attach necessary cables and/or antennas to the AP.
3. Attach the AP to the secured mounting adapter as shown in Figure 7.
   a. Align the AP with a mounting adapter, placing the AP so that it's mounting tabs are at an angle of approximately 30 degrees to the adapter.
4. Pushing toward the wall, rotate the AP clockwise until it clicks into place (see Figure 7).

Figure 7 *Attaching the AP to the Mounting Bracket*

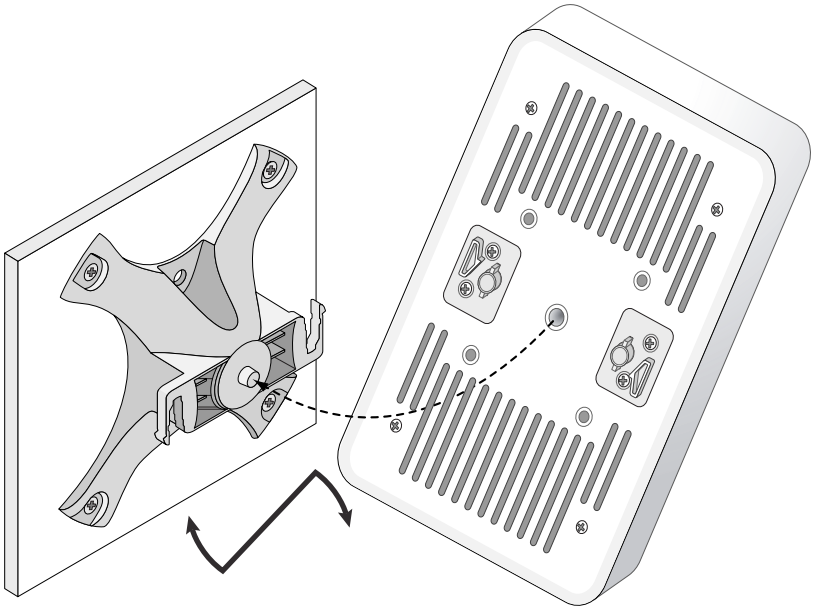

Figure 8 *Completed Installation*

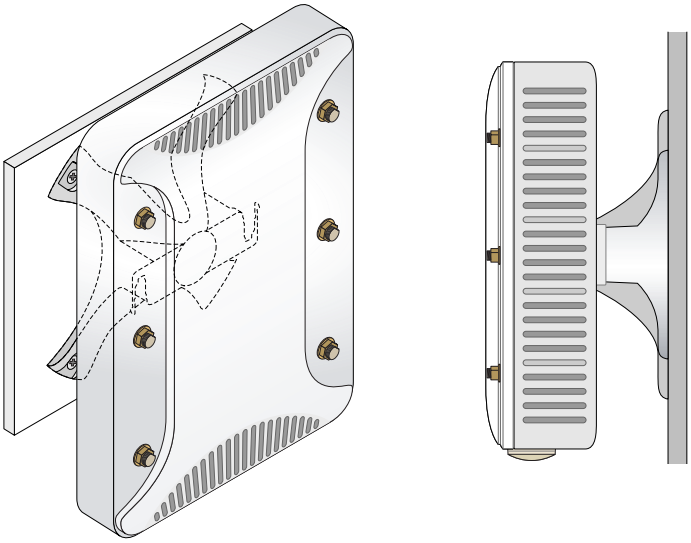

Grounding the AP

The grounding must be completed before powering up the AP. The grounding wire should be #8 AWG.

1. Peel the cover of one end of the grounding wire and place the bare grounding wire into the included copper lug, and press firmly with the crimping pliers.
2. Fasten the copper lug to the grounding hole on the AP with the included M4 x6 screw.

Connecting the Ethernet Cable

To connect the Ethernet cable to the AP, perform the following steps using the cable glands that ships with your AP.

WARNING

Failure to use the included Ethernet cable glands can lead to connectivity and POE issues.

NOTE

The cable is not included and must be purchased separately. Purchase a suitable UV-resistant, outdoor rated, CAT 5E or better RJ45 cable for use with the AP.

Figure 9 *Installing a Cable Gland*

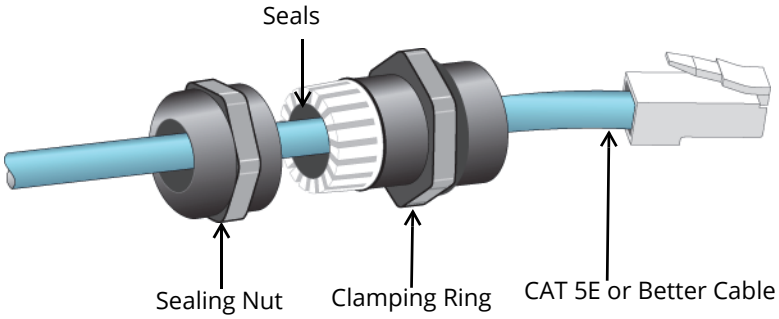

1. Slide the sealing nut over the cable (without the RJ45 connector attached to the end).
2. Slide the clamping ring over the cable.
3. Using a crimping tool, attach the shielded RJ45 connector to the end of the cable.
4. Remove the weatherproof cap on the Ethernet port.
5. Insert the RJ45 connector to the Ethernet port.
6. Screw the clamping ring onto the Ethernet port.
7. Screw the sealing nut onto the clamping ring.

NOTE

The seals inside the clamping ring by factory default is applicable for cables with 5-8.5 mm diameter. In the cable gland kit, another seals is provided for use with the cables with 7-10 mm diameter.

Verifying Post-Installation Connectivity

The integrated LEDs on the AP can be used to verify that the AP is receiving power and initializing successfully (see Table 1 and Table 2). Refer to the *ArubaOS Quick Start Guide* for further details on verifying post-installation network connectivity.

Configuring the AP

AP Provisioning/Reprovisioning

Provisioning parameters are unique to each AP. These local AP parameters are initially configured on the controller which are then pushed out to the AP and stored on the AP itself. Aruba recommends that provisioning settings be configured via the ArubaOS Web UI only. Refer to the *ArubaOS User Guide* for complete details.

AP Configuration

Configuration parameters are network or controller specific and are configured and stored on the controller. Network configuration settings are pushed out to the AP(s) but remain stored on the controller.

Configuration settings can be configured via the ArubaOS Web UI or ArubaOS CLI. Refer to the *ArubaOS User Guide* for complete details.

Product Specifications

Mechanical:

- Device Dimensions (HxWxD): 8.7 inches x 5.9 inches x 2.6 inches (221mm x 150mm x 66mm)

Electrical

- Ethernet
  - 2 x 10/100/1000Base-T auto-sensing Ethernet RJ-45 Interfaces
  - MDI/MDX
  - Power over Ethernet (IEEE 802.3at compliant), 48VDC(nominal) /0.6A
- Power
  - POE support on WAN port: 802.3at-compliant POE sourcing devices

Environmental

- Operating
  - Temperature: -40ºC to 60ºC (-40ºF to 140ºF)
  - Humidity: 5% to 95% non-condensing
- Storage
  - Temperature: -40ºC to 85ºC (-40ºF to 185ºF)

For additional specifications on this product, please refer to the data sheet. The data sheet can be found at www.arubanetworks.com.

Safety and Regulatory Compliance

Aruba Networks provides a multi-language document that contains country-specific restrictions and additional safety and regulatory information for all Aruba access points. This document can be viewed or downloaded from the following location: www.arubanetworks.com/safety_addendum

Regulatory Model Name

The regulatory model name of AP-228 is APIN0228.

FCC

This device is electronically labeled. To view the FCC ID:

1. Log into the controller WebUI
2. Navigate to **Maintenance > Controller > About**.

CAUTION

Aruba access points must be installed by a professional installer. The professional installer is responsible for ensuring that grounding is available and it meets applicable local and national electrical codes.

CAUTION

RF Radiation Exposure Statement: This equipment complies with FCC RF radiation exposure limits. This equipment should be installed and operated with a minimum distance of 9.84 inches (25 cm) between the radiator and your body for 2.4 GHz and 5 GHz operations. This transmitter must not be co-located or operating in conjunction with any other antenna or transmitter.

FCC Class B Part 15

This device complies with Part 15 of the Federal Communications Commission (FCC) Rules. Operation is subject to the following two conditions:

- This device may not cause harmful interference.
- This device must accept any interference received, including interference that may cause undesired operation.

CAUTION

Changes or modifications to this unit not expressly approved by the party responsible for compliance could void the user's authority to operate this equipment.

This equipment has been tested and found to comply with the limits for a Class B digital device, pursuant to Part 15 of the FCC Rules. This equipment generates, uses and can radiate radio frequency energy and, if not installed and used in accordance with the manufacturer's instructions, may cause interference harmful to radio communications.

If this equipment does cause interference, which can be determined by turning the equipment off and on, the user is encouraged to try to correct the interference by one or more of the following measures:

- Reorient or relocate the receiving antenna.
- Increase the separation between the equipment and receiver.
- Connect the equipment to an outlet on a circuit different from that to which the receiver is connected.
- Consult the dealer or an experienced radio or TV technician for help.

EU Regulatory Conformance

Aruba Networks, Inc., hereby declares that the APIN0228 device model is in compliance with the essential requirements and other relevant provisions of Directive 1999/5/EC -CE(!). The Declaration of Conformity made under Directive 1999/5/EC is available for viewing at www.arubanetworks.com.

Proper Disposal of Aruba Equipment

For the most current information about Global Environmental Compliance and Aruba products, see our website at www.arubanetworks.com.

Waste of Electrical and Electronic Equipment

Aruba products at end of life are subject to separate collection and treatment in the EU Member States, Norway, and Switzerland and therefore are marked with the symbol shown at the left (crossed-out wheelie bin). The treatment applied at end of life of these products in these countries shall comply with the applicable national laws of countries implementing Directive 2002/96EC on Waste of Electrical and Electronic Equipment (WEEE).

European Union RoHS

Aruba products also comply with the EU Restriction of Hazardous Substances Directive 2011/65/EC (RoHS). EU RoHS restricts the use of specific hazardous materials in the manufacture of electrical and electronic equipment. Specifically, restricted materials under the RoHS Directive are Lead (including Solder used in printed circuit assemblies), Cadmium, Mercury, Hexavalent Chromium, and Bromine. Some Aruba products are subject to the exemptions listed in RoHS Directive Annex 7 (Lead in solder used in printed circuit assemblies). Products and packaging will be marked with the “RoHS” label shown at the left indicating conformance to this Directive.

China RoHS

Aruba products also comply with China environmental declaration requirements and are labeled with the “EFUP 10” label shown at the left.

有毒有害物质声明
Hazardous Materials Declaration

部件名称 (Parts)	有毒有害物质或元素 (Hazardous Substance)					
	铅 (Pb)	汞 (Hg)	镉 (Cd)	六价铬 (Cr^{6+})	多溴联苯 (PBB)	多溴二苯醚 (PBDE)
电路板 (PCA Boards)	×	○	○	○	○	○
机械组件 (Mechanical Sub-Assemblies)	×	○	○	○	○	○

○： 表示该有毒有害物质在该部件所有均质材料中的含量均在 SJ/T11363-2006 标准规定的限量要求以下。
Indicates that the concentration of the hazardous substance in all homogeneous materials in the parts is below the relevant threshold of the SJ/T11363-2006 standard.

×： 表示该有毒有害物质至少在该部件的某一均质材料中的含量超出SJ/T11363−2006标准规定的限量要求。
Indicates that the concentration of the hazardous substance of at least one of all homogeneous materials in the parts is above the relevant threshold of the SJ/T11363-2006 standard.

对销售之日的所售产品, 本表显示, 供应链的电子信息产品可能包含这些物质。
This table shows where these substances may be found in the supply chain of electronic information products, as of the date of sale of the enclosed product.

此标志为针对所涉及产品的环保使用期标志. 某些零部件会有一个不同的环保使用期(例如, 电池单元模块) 贴在其产品上.
此环保使用期限只适用于产品是在产品手册中所规定的条件下工作.
The Environment- Friendly Use Period (EFUP) for all enclosed products and their parts are per the symbol shown here. The Environment- Friendly Use Period is valid only when the product is operated under the conditions defined in the product manual.

Canadian Statement

Under Industry Canada regulations, this radio transmitter may only operate using an antenna of a type and maximum (or lesser) gain approved for the transmitter by Industry Canada. To reduce potential radio interference to other users, the antenna type and its gain should be so chosen that the equivalent isotropically radiated power (e.i.r.p.) is not more than that necessary for successful communication.

This device complies with Industry Canada licence-exempt RSS standard(s).

Operation is subject to the following two conditions: (1) this device may not cause interference, and (2) this device must accept any interference, including interference that may cause undesired operation of the device.

The device for operation in the band 5150-5250 MHz is only for indoor use to reduce the potential for harmful interference to co-channel mobile satellite systems;

The maximum antenna gain permitted for devices in the bands 5250-5350 MHz and 5470-5725 MHz shall comply with the e.i.r.p. limit; and the maximum antenna gain permitted for devices in the band 5725-5825 MHz shall comply with the e.i.r.p. limits specified for point-to-point and non point-to-point operation as appropriate.

Users should also be advised that high-power radars are allocated as primary users (i.e. priority users) of the bands 5250-5350 MHz and 5650-5850 MHz and that these radars could cause interference and/or damage to LE-LAN devices.

This page is intentionally left blank.

Contacting Aruba Networks

Web Site Support	
Main Site	http://www.arubanetworks.com
Support Site	https://support.arubanetworks.com
Software Licensing Site	https://licensing.arubanetworks.com/login.php
Wireless Security Incident Response Team (WSIRT)	http://www.arubanetworks.com/support/wsirt.php
Support Emails	
• Americas, APAC and EMEA	support@arubanetworks.com
WSIRT Email Please email details of any security problem found in an Aruba product.	sirt@arubanetworks.com

Telephone Support	
Aruba Corporate	+1 (408) 227-4500
FAX	+1 (408) 227-4550
Support	
• United States	800-WI-FI-LAN (800-943-4526)
• Universal Free Phone Service Number (UIFN): Australia, Canada, China, France, Germany, Hong Kong, Ireland, Israel, Japan, Korea, Singapore, South Africa, Taiwan, and the UK.	+800-4WIFI-LAN (+800-49434-526)
• All Other Countries	+1 (408) 754-1200

© 2015 Aruba Networks, Inc. All rights reserved.

0511728-02

www.arubanetworks.com

1344 Crossman Avenue
Sunnyvale, California 94089

Phone: 408.227.4500
Fax 408.227.4550