Aruba 318 Series Wireless Access Point

Installation Guide

The Aruba 318 Series access points support IEEE 802.11ac Wave 2 standard, delivering high performance with the MU-MIMO (Multi-User Multiple-Input, Multiple-Output) technology, while also supporting 802.11a/b/g/n wireless services.

The 318 Series wireless access point provides the following capabilities:

- IEEE802.11a/b/g/n/ac operation as a wireless access point
- IEEE802.11a/b/g/n/ac operation as a wireless air monitor
- IEEE802.11a/b/g/n/ac spectrum monitor
- Compatibility with IEEE 802.3at PoE

Guide Overview

- "Hardware Overview" on page 2 provides a detailed hardware overview of the 318 Series access points.
- "Before You Begin" on page 4 provides key questions to ask and items to consider when deploying a wireless network.
- "Installing the AP" on page 6 describes the multi-step process for a successful installation and deployment of the 318 Series access points.
- "Safety and Regulatory Compliance" on page 10 provides an overview of safety and regulatory compliance information.

Package Contents

- 318 Series access point
- Ethernet cable gland x1
- USB console cable
- Copper lug x1
- M4 x 6 screw x1
- Startup guide
- Simplified Declaration of Conformity

NOTE

The weatherproof caps for Ethernet and Console interfaces are connected to the access point, not loose in the package.

NOTE

Mounting kits for use with the 318 Series access points are sold separately. Contact your Aruba sales representative for details.

NOTE

Inform your supplier if there are any incorrect, missing, or damaged parts. If possible, retain the carton, including the original packing materials. Use these materials to repack and return the unit to the supplier if needed.

Hardware Overview

Figure 1 *318 Series Front View*

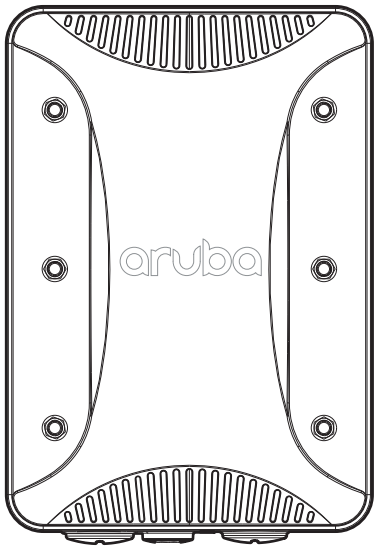

Figure 2 *318 Series Bottom View*

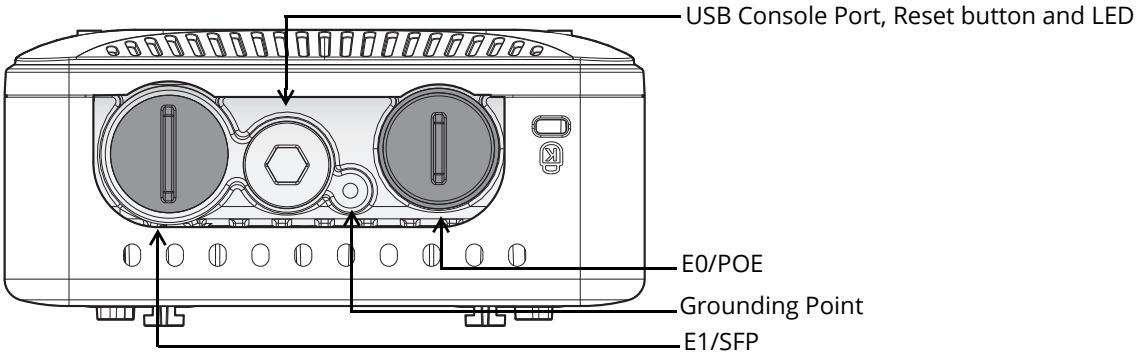

CAUTION

External antennas for this device must be installed by an Aruba Certified Mobility Professional (ACMP) or other Aruba-certified technician, using manufacturer-approved antennas only.
The Equivalent Isotropically Radiated Power (EIRP) levels for all external antenna devices must not exceed the regulatory limit set by the host country/domain.
Installers are required to record the antenna gain for this device in the system management software. A list of approved antennas can be found at: http://www.arubanetworks.com/assets/og/OG_AP-318Series.pdf.

Les antennes externes pour cet appareil doivent être installées par un professionnel de la mobilité certifié Aruba (ACMP) ou un autre technicien certifié Aruba, en utilisant uniquement des antennes approuvées par le fabricant.
Les niveaux équivalents de puissance à rayonnement isotrope (EIRP) pour tous les périphériques d'antenne externe ne doivent pas dépasser la limite réglementaire définie par le pays hôte / domaine.
Les installateurs doivent enregistrer le gain d'antenne pour cet appareil dans le logiciel de gestion du système.

LED

The 318 Series access point is equipped with one LED that indicates the system status of the access point.

Table 1 *318 Series LED Meanings during Boot Up*

LED	Color/State	Meaning
System LED	Off	No power to AP
	Red	Initial power-up
	Green - Flashing	AP booting
	Green - Steady	AP ready and 1000Mbps Ethernet link established. The LED turns off after 1200 seconds
	Green - Yellow, 6 seconds period	AP ready and 10/100Mbps Ethernet link established. The LED turns off after 1200 seconds

Table 2 *318 Series LED Meanings during Operation*

LED	Color/State	Meaning
System LED	Solid Red	General fault
	One blink off every 3 seconds	Radio 0 fault (5 GHz)
	Two quick blink off 0.5 seconds apart cycled every 3 seconds	Radio 1 fault (2.4GHz)

USB Console Port

The USB Micro-B console port allows you to connect the access point to a laptop or serial console for direct management. Use the included USB console cable to connect the access point. You can download the necessary driver for USB-UART adapter from support.arubanetworks.com under the **Tools & Resources** tab.

NOTE

You need a proper Allen wrench (8mm) to open the cover of the USB Console port.

Use the following setting to access the terminal:

Table 3 *Console Settings*

Baud Rate	Data Bits	Parity	Stop Bits	Flow Control
9600	8	None	1	None

Reset Button

The reset button can be used to return the access point to factory default settings. To reset the access point:

1. Power off the access point.
2. Press and hold the reset button using a small, narrow object, such as a paper clip.
3. Power-on the access point without releasing the reset button. The system LED will flash within 5 seconds.
4. Release the reset button.

The system LED will flash again within 15 seconds indicating that the reset is completed. The access point will now continue to boot with the factory default settings.

Ethernet Port

318 Series access point is equipped with one 10/100/1000 Base-T auto-sensing MDI/MDX Ethernet port. This port supports wired-network connectivity, in addition to Power over Ethernet (PoE) from IEEE 802.3at compliant power sources.
This access point accepts 56V DC (802.3at) nominal as a standard powered device (PD) from a Power Sourcing Equipment (PSE) such as a PoE midspan injector, or network infrastructure that supports PoE.

This port has an RJ-45 female connector with the pin-outs shown in Figure 3.

Figure 3 *Gigabit Ethernet Port Pin-Out*

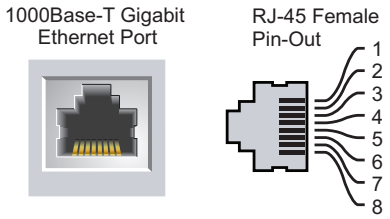

Signal Name	Function
BI_DA+	Bi-directional pair +A, POE Negative
BI_DA-	Bi-directional pair -A, POE Negative
BI_DB+	Bi-directional pair +B, POE Positive
BI_DC+	Bi-directional pair +C, POE Positive
BI_DC-	Bi-directional pair -C, POE Positive
BI_DB-	Bi-directional pair -B, POE Positive
BI_DD+	Bi-directional pair +D, POE Negative
BI_DD-	Bi-directional pair -D, POE Negative

Grounding Point

Always remember to protect the access point by installing grounding lines. The ground connection must be complete before connecting power to the access point enclosure.

SFP Port

The 318 Series access point is equipped with one 1000 Base-X small form-factor pluggable (SFP) port for fiber-optic network connections. The applicable SFP modules includes:

- Aruba SFP-LX-EXT SFP module (part number: Q8N52A)
- Aruba SFP-SX-EXT SFP module (part number Q8N53A)

The applicable SFP cable gland is Aruba CKIT-OD-SFP SFP cable gland (part number: Q8N54A). The SFP module and cable gland are sold separately. Contact your Aruba sales representative for details.

Figure 4 *318 Series Rear View*

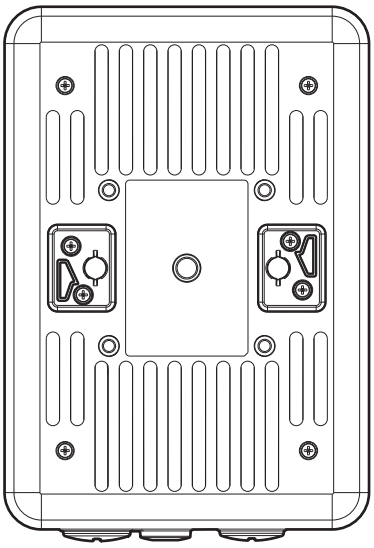

Before You Begin

CAUTION

FCC Statement: Improper termination of access points installed in the United States configured to non-US model controllers will be in violation of the FCC grant of equipment authorization. Any such willful or intentional violation may result in a requirement by the FCC for immediate termination of operation and may be subject to forfeiture (47 CFR 1.80).

EU Statement:
Lower power radio LAN product operating in 2.4 GHz and 5 GHz bands. Please refer to the *ArubaOS/Instant User Guide* for details on restrictions.

CAUTION

Produit réseau local radio basse puissance operant dans la bande fréquence 2.4 GHz et 5 GHz. Merci de vous referrer au *ArubaOS/Instant User Guide* pour les details des restrictions.

Low Power FunkLAN Produkt, das im 2.4 GHz und im 5 GHz Band arbeitet. Weitere Informationen bezlüglich Einschränkungen finden Sie im *ArubaOS/Instant User Guide.*

Apparati Radio LAN a bassa Potenza, operanti a 2.4 GHz e 5 GHz. Fare riferimento alla *ArubaOS/Instant User Guide* per avere informazioni detagliate sulle restrizioni.

CAUTION

To meet regulatory restrictions, the access point must be professionally installed.

Pre-Installation Network Requirements

NOTE

The instructions in this section are applicable to the 318 Series access points running ArubaOS only.

After WLAN planning is complete and the appropriate products and their placement have been determined, the Aruba controller(s) must be installed and initial setup performed before the Aruba access points are deployed.

For initial setup of the controller, refer to the *ArubaOS Quick Start Guide* for the software version installed on your controller.

Pre-Installation Checklist

Before installing your access point, be sure that you have the items listed below:

- CAT5E UTP cable or better
- IEEE 802.3at compliant PoE source

For 318 Series access point running ArubaOS only:

- Aruba controller provisioned on the network
- Layer 2/3 network connectivity to your access point
- One of the following network services:
  - Aruba Discovery Protocol (ADP)
  - DNS server with an “A” record
  - DHCP Server with vendor specific options

NOTE

Aruba in compliance with governmental requirements, has designed the 318 Series such that only authorized network administrators can change configuration settings. For more information about AP configuration, refer to the ArubaOS Quick Start Guide and ArubaOS/Instant User Guide.

CAUTION

Access points are radio transmission devices and as such are subject to governmental regulation. Network administrators responsible for the configuration and operation of access points must comply with local broadcast regulations. Specifically, access points must use channel assignments appropriate to the location in which the access point will be used.

Verifying Pre-Installation Connectivity

NOTE

The instructions in this section are applicable to the 318 Series access points running ArubaOS only.

Before you install access points in a network environment, make sure that the access points will be able to locate and connect to the controller when they are powered on. Specifically, you must verify the following conditions:

- When connected to the network, each access point is assigned a valid IP address.
- Access points are able to locate the controller.

Refer to the *ArubaOS Quick Start Guide* for instructions on locating and connecting to the controller.

Identifying Specific Installation Locations

Use the AP placement map generated by Aruba's RF Plan software application to determine the proper installation location(s). Each location should be as close as possible to the center of the intended coverage area and should be free from obstructions or obvious sources of interference. These RF absorbers/reflectors/interference sources will impact RF propagation and should have been accounted for during the planning phase and adjusted for in RF plan.

Identifying Known RF Absorbers/Reflectors/Interference Sources

Identifying known RF absorbers, reflectors, and interference sources while in the field during the installation phase is critical. Make sure that these sources are taken into consideration when you attach an AP to its fixed location. Examples of sources that degrade RF performance include:

- Cement and brick
- Objects that contain water
- Metal
- Microwave ovens
- Wireless phones and headsets

Installing the AP

NOTE

Service to all Aruba products should be performed by trained service personnel only.

Using Mount Kits

The 318 Series access points can be installed on a wall or attached to a pole by using mount kits. The AP-220-MNT-W1 Mount Kit is directly compatible, while the AP-270-MNT-V1, AP-270-MNT-V2, AP-270-MNT-H1 and AP-270-MNT-H2 mount kit are compatible when the AP-270-MNT-ADP adapter is utilized.

Table 4 *Applicable Mount Kits for 318 Series Access Point*

Part Number	Description
JW046A	AP-220-MNT-W1 flat surface wall/ceiling black AP basic flat surface mount kit
JW047A	AP-220-MNT-W1W flat surface wall/ceiling white AP basic flat surface mount kit
JW056A	AP-270-MNT-ADP AP-228 to AP-270-MNT-XX Outdoor Mount Adapter
JW052A	AP-270-MNT-V1 long mount kit for wall and vertical pole mounting, 300 mm from vertical mounting asset.

Table 4 *Applicable Mount Kits for 318 Series Access Point*

Part Number	Description
JW053A	AP-270-MNT-V2 short mount kit for wall and vertical pole mounting, 75 mm from vertical mounting asset.
JW054A	AP-270-MNT-H1 mount kit for hanging from inclined or horizontal structure.
JW055A	AP-270-MNT-H2 flush mount kit for wall and ceiling mounting.

NOTE

The 318 Series access point does not ship with any mount kits. These mount kits are available as accessories and must be ordered separately.

NOTE

For installation instructions on AP-220-MNT-W1, AP-270-MNT-V1, AP-270-MNT-V2, AP-270-MNT-H1 and AP-270-MNT-H2 mount kit, please refer to the *AP-270-MNT-V1 Installation Guide, AP-270-MNT-V2 Installation Guide, AP-270-MNT-H1 Installation Guide and AP-270-MNT-H2 Installation Guide* respectively.

Grounding the Access Point

The grounding must be completed before powering up the access point. The grounding wire should be #8 AWG.

1. Peel the cover of one end of the grounding wire and place the bare grounding wire into the included copper lug, and press firmly with the crimping pliers.
2. Fasten the copper lug to the grounding hole on the access point with the included M4 x6 screw.

Connecting the Ethernet Cable

To connect the Ethernet cable to the access point, perform the following steps using the Ethernet cable glands that ships with your access point.

WARNING

Failure to use the included Ethernet cable glands can lead to connectivity and POE issues.

NOTE

The cable is not included and must be purchased separately. Purchase a suitable UV-resistant, outdoor rated, CAT 5E or better RJ45 cable for use with the access point.

Figure 5 *Installing the Ethernet Cable Gland*

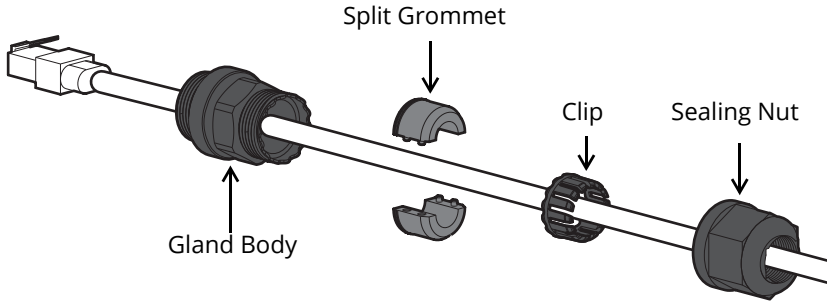

1. Remove the dust cap from the Ethernet port
2. Slide the sealing nut, clip, split grommet and gland body over the cable.
3. Insert the RJ45 connector to the Ethernet port.
4. Screw the gland body onto the Ethernet port.
5. Combine the two split parts of the grommet over the cable, and move it towards the gland body until it locates at the recess of the gland body.

6. Move the clip towards the gland body, passing over the grommet, until the wavy end of the clip properly fits into the wavy end of the gland body.
7. Screw the sealing nut onto the gland body

NOTE

Two grommets are provided in the package for use with the Ethernet cables. One is applicable for cables with 4-6 mm diameter, and another is applicable for cables with 6-10 mm diameter.

Connecting the Fiber-optic Cable

NOTE

The fiber-optic cable is not included in the package and must be purchased separately. Purchase a suitable UV-resistant, outdoor rated cable for use with the access point.

NOTE

When the fiber-optic cable (with the cable gland) is connected to the access point, the AP-270-MNT-H2 mount kit is not applicable for mounting the access point.

NOTE

When using the AP-270-MNT-H1 mount kit, the access point with the fiber-optic cable (with the cable gland) connected can only tilt down 30 degree in maximum.

To connect the fiber-optic cable to the access point, perform the following steps.

1. Remove the dust cap from the SFP port.
2. Insert the SFP module into the SFP port, and ensure it in place.
3. Slide the sealing nut, clip, split grommet and gland body over the cable.

Figure 6 *Sliding the Fiber-optic Cable Gland Components over the Cable*

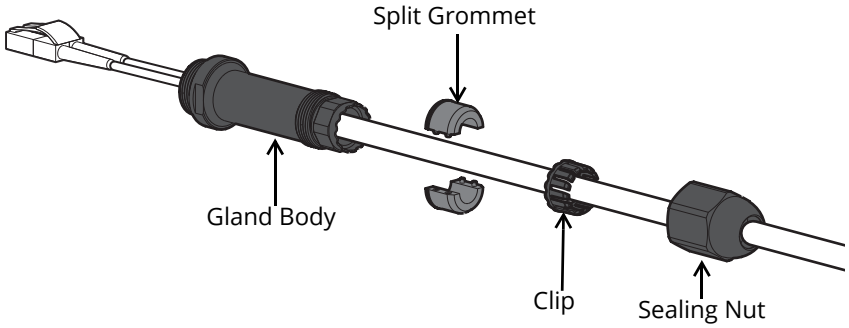

4. Insert the optic fiber connector of the cable into the SFP module.
5. Screw the gland body onto the SFP port

Figure 7 *Screwing the Gland Body onto the SFP Port*

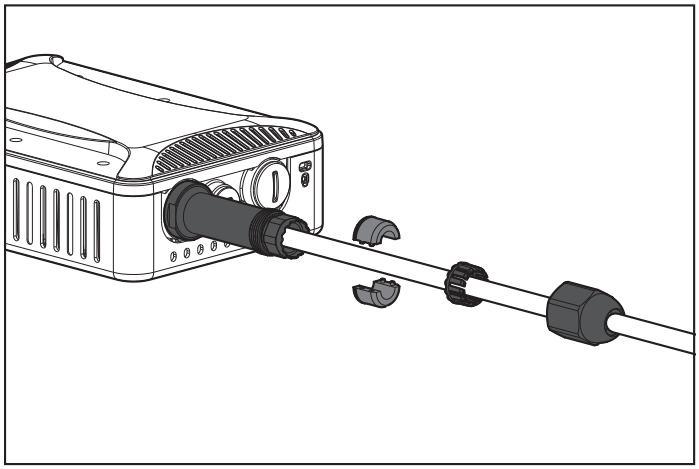

6. Combine the two split parts of the grommet over the cable, and move it towards the gland body until it locates at the recess of the gland body.
7. Move the clip towards the gland body, passing over the grommet, until the wavy end of the clip properly fits into the wavy end of the gland body.

Figure 8 *Installing the Fiber-optic Cable Gland*

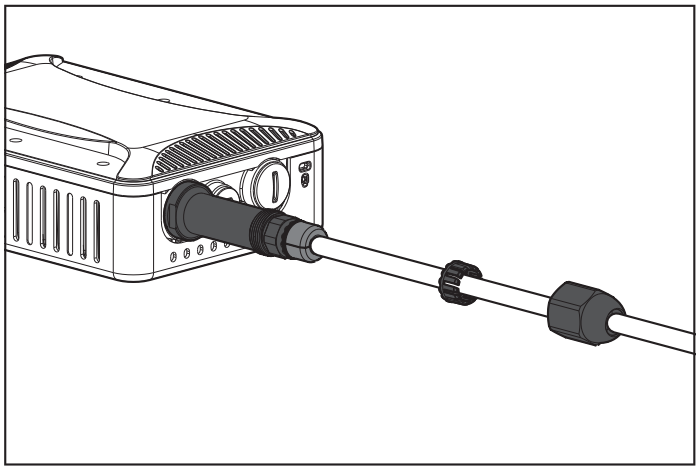

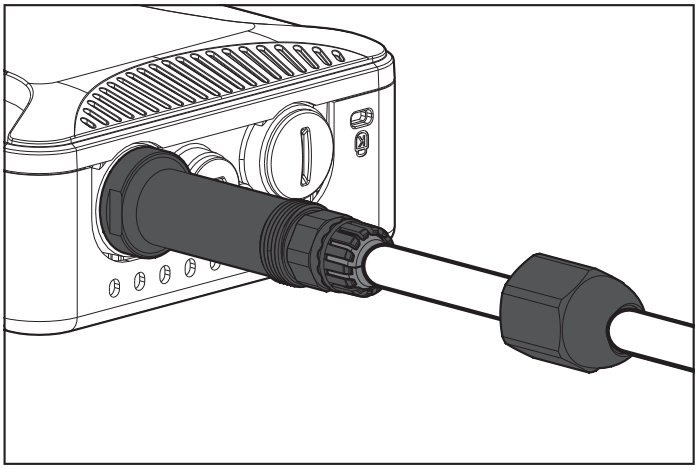

8. Screw the sealing nut onto the gland body.

Figure 9 *Completed Installation*

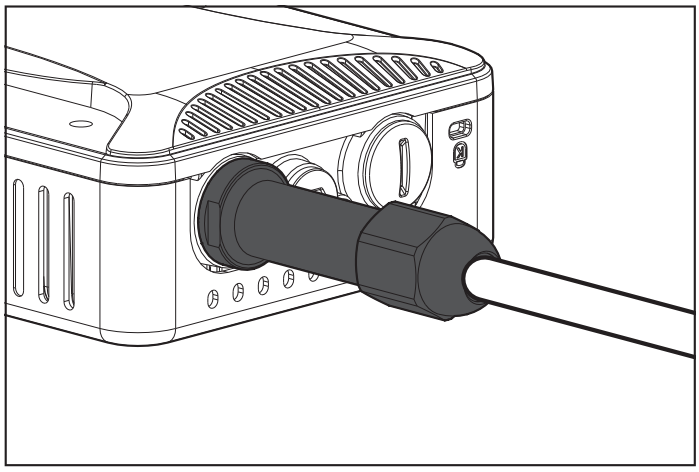

Verifying Post-Installation Connectivity

The integrated LEDs on the access point can be used to verify that the access point is receiving power and initializing successfully (see Table 1 and Table 2). For instructions on initial setup and software configuration, refer to the AP Software Quick Start Guide.

Electrical and Environmental Specifications

Electrical

- Ethernet
  - One 10/100/1000Base-T auto-sensing Ethernet RJ-45 Interfaces
  - Power over Ethernet (IEEE 802.3at compliant)

Environmental

- Operating
  - Temperature: -40ºC to 55ºC (-40ºF to 131ºF)
- Storage
  - Temperature: -40ºC to 70ºC (-40ºF to 158ºF)
  - Humidity: 5% to 93% non-condensing

For additional specifications on this product, please refer to the data sheet. The data sheet can be found at www.arubanetworks.com.

Regulatory Model Name

The following regulatory model names apply to the 318 Series:

- AP-318: APIN0318

Safety and Regulatory Compliance

FCC

To view the FCC ID for controller-managed access points:

1. Log into the controller WebUI
2. Navigate to Maintenance > Controller > About

To view the FCC ID for Instant access points:

1. Log into the virtual controller WebUI
2. Navigate to Maintenance > About

CAUTION

RF Radiation Exposure Statement: This equipment complies with RF radiation exposure limits. This equipment should be installed and operated with a minimum distance of 13.78 inches (35 cm) between the radiator and your body for 2.4 GHz and 5 GHz operations. This transmitter must not be co-located or operating in conjunction with any other antenna or transmitter.

CAUTION

Déclaration de la concernant l'exposition aux rayonnements à fréquence radioélectrique (FR): Cet appareil est conforme aux limites d'exposition aux rayonnements FR établies par la FCC. Il doit être installé et utilisé à une distance minimale de 35 cm (13,78 pouces) entre le radiateur et votre corps, qu'il opère sur la bande 2,4 GHz ou 5 GHz. Cet émetteur ne doit pas être installé ou utilisé à proximité immédiate d'une autre antenne ni d'un autre transmetteur.

CAUTION

The device could automatically discontinue transmission in case of absence of information to transmit, or operational failure. Note that this is not intended to prohibit transmission of control or signaling information or the use of repetitive codes where required by the technology.

CAUTION

Changes or modifications to this unit not expressly approved by the party responsible for compliance could void the user's authority to operate this equipment.

CAUTION

Toute modification effectuée sur cet équipement sans l'autorisation expresse de la partie responsable de la conformité est susceptible d'annuler son droit d'utilisation.

CAUTION

Aruba access points must be installed by a professional installer. The professional installer is responsible for ensuring that grounding is available and it meets applicable local and national electrical codes.

FCC Class B Part 15

This equipment has been tested and found to comply with the limits for a Class B digital device, pursuant to Part 15 of the FCC Rules. These limits are designed to provide reasonable protection against harmful interference in a residential installation. This equipment generates, uses and can radiate radio frequency energy and, if not installed and used in accordance with the manufacturer's instructions, may cause harmful interference to radio communications.
However, there is no guarantee that interference will not occur in a particular installation. If this equipment does cause harmful interference to radio or television reception, which can be determined by turning the equipment off and on, the user is encouraged to try to correct the interference by one or more of the following measures:

- Reorient or relocate the receiving antenna.
- Increase the separation between the equipment and receiver.
- Connect the equipment to an outlet on a circuit different from that to which the receiver is connected.
- Consult the dealer or an experienced radio or TV technician for help.

This device complies with part 15 of the FCC Rules. Operation is subject to the following two conditions: (1) This device may not cause harmful interference, and (2) this device must accept any interference received, including interference that may cause undesired operation.

Canada

Under Industry Canada regulations, this radio transmitter may only operate using an antenna of a type and maximum (or lesser) gain approved for the transmitter by Industry Canada. To reduce potential radio interference to other users, the antenna type and its gain should be so chosen that the equivalent isotropically radiated power (e.i.r.p.) is not more than that necessary for successful communication.

This device complies with Industry Canada license-exempt RSS standard(s).
Operation is subject to the following two conditions: (1) this device may not cause interference, and (2) this device must accept any interference, including interference that may cause undesired operation of the device.

When operated in the 5.15 to 5.25 GHz frequency range, this device is restricted to indoor use to reduce the potential for harmful interference with co-channel Mobile Satellite Systems.

Déclaration d'Industrie Canada

Le présent appareil est conforme aux CNR d'Industrie Canada applicables aux appareils radio exempts de licence. L'exploitation est autorisée aux deux conditions suivantes : (1) l'appareil ne doit pas produire de brouillage, et (2) l'utilisateur de l'appareil doit accepter tout brouillage radioélectrique subi, même si le brouillage est susceptible d'en compromettre le fonctionnement.

Pour un fonctionnement dans la bande de fréquences comprises entre 5,15 et 5,25 GHz, son utilisation est limitée à un environnement intérieur afin de réduire la possibilité d'interférences nuisibles avec les systèmes mobiles par satellite opérant sur le même canal.

CAUTION

(i) For devices with detachable antenna(s), the maximum antenna gain permitted for devices in the band 5725-5850 MHz shall be such that the equipment still complies with the e.i.r.p. limits specified for point-to-point and non-point-to-point operation as appropriate; and
(ii) Users should also be advised that high power radars are allocated as primary users (i.e. priority users) of the bands 5650-5850MHz and that these radars could cause interference and/or damage to LE-LAN devices.

CAUTION

(i) pour les dispositifs munis d'antennes amovibles, le gain maximal d'antenne permis (pour les dispositifs utilisant la bande de 5 725 à 5 850 MHz) doit être conforme à la limite de la p.i.r.e. spécifiée pour l'exploitation point à point et l'exploitation non point à point, selon le cas;
(ii) Les utilisateurs devraient aussi être avisés, d'une part, que les utilisateurs de radars de haute puissance sont désignés utilisateurs principaux (c.-à-d., qu'ils ont la priorité) des bandes de 5 650 à 5 850 MHz et, d'autre part, que ces radars pourraient causer du brouillage et/ou des dommages aux dispositifs de RL-EL.

Canadian Caution

This radio transmitter model APIN0318 has been approved by Industry Canada to operate with the antenna types listed in the table in the online ordering guide (link provided below) with the maximum permissible gain indicated. Antenna types not included in this list, having a gain greater than the maximum gain indicated for that type, are strictly prohibited for use with this device.
http://www.arubanetworks.com/assets/og/OG_AP-318Series.pdf

Le présent transmetteur radio modèle APIN0318 a été approuvé par Industrie Canada pour fonctionner avec les types d'antennes indiqués dans le tableau du guide de commande en ligne (lien fourni ci-dessous) avec le gain permissible maximum indiqué. Il est strictement défendu d'utiliser avec cet appareil les types d'antennes non inclus dans cette liste, ayant un gain supérieur au gain maximum indiqué pour ce type.
http://www.arubanetworks.com/assets/og/OG_AP-318Series.pdf

EU Regulatory Conformance

Aruba hereby declares that the 318 Series wireless access points are in compliance with directives listed below:

- EMC Directive 2014
- Low Voltage Directive 2014
- RED Directive 2014
- REACH Regulation (EC) No.: 1907/2006
- RoHS Directive 2011
- WEEE Directive 2012

A Declaration of Conformity for these directives is available for viewing at www.arubanetworks.com.

Medical

1. Equipment not suitable for use in the presence of flammable mixtures.
2. Connect to only IEC 60950-1 or IEC 60601-1 certified products and power sources. The end user is responsible for the resulting medical system complies with the requirements of IEC 60601-1.
3. Wipe with a dry cloth, no additional maintenance required.
4. No serviceable parts, the unit must be sent back to the manufacturer for repair.
5. No modifications are allowed without Aruba approval.

Taiwan

第十二條

經型式認證合格之低功率射頻電機，非經許可，公司、商號或使用者均不得擅自變更頻率、加大功率或變更原設計之特性及功能。

第十四條

低功率射頻電機之使用不得影響飛航安全及干擾合法通信；經發現有干擾現象時，應立即停用，並改善至無干擾時方得繼續使用。

前項合法通信，指依電信法規定作業之無線電通信。

低功率射頻電機須忍受合法通信或工業、科學及醫療用電波輻射性電 機設備之干擾。

Brazil

Este equipamento não tem direito à proteção contra interferência prejudicial e não pode causar interferência em sistemas devidamente autorizados.

México

La operación de este equipo está sujeta a las siguientes dos condiciones: (1) es posible que este equipo o dispositivo no cause interferencia perjudicial y (2) este equipo o dispositivo debeaceptar cualquier interferencia, incluyendo la que pueda causar su operación no deseada.

Proper Disposal of Aruba Equipment

For the most current information about Global Environmental Compliance and Aruba products, see our website at www.arubanetworks.com.

Waste of Electrical and Electronic Equipment

Aruba products at end of life are subject to separate collection and treatment in the EU Member States, Norway, and Switzerland and therefore are marked with the symbol shown at the left (crossed-out wheelie bin). The treatment applied at end of life of these products in these countries shall comply with the applicable national laws of countries implementing Directive 2002/96EC on Waste of Electrical and Electronic Equipment (WEEE).

European Union RoHS

Aruba products also comply with the EU Restriction of Hazardous Substances Directive 2011/65/EC (RoHS). EU RoHS restricts the use of specific hazardous materials in the manufacture of electrical and electronic equipment. Specifically, restricted materials under the RoHS Directive are Lead (including Solder used in printed circuit assemblies), Cadmium, Mercury, Hexavalent Chromium, and Bromine. Some Aruba products are subject to the exemptions listed in RoHS Directive Annex 7 (Lead in solder used in printed circuit assemblies). Products and packaging will be marked with the “RoHS” label shown at the left indicating conformance to this Directive.

China RoHS

Aruba products also comply with China environmental declaration requirements and are labeled with the “EFUP 25” label shown at the left.

有毒有害物质声明

Hazardous Materials Declaration

部件名称 (Parts)	有毒有害物质或元素（Hazardous Substance）					
	铅（Pb）	汞（Hg）	镉（Cd）	六价铬（Cr^{6+}）	多溴联苯（PBB）	多溴二苯醚（PBDE）
电路模块 (circuit modules)	X	O	O	O	O	O
电缆及电缆组件 (Cables & Cable Assemblies)	O	O	O	O	O	O
金属部件 (Metal Parts)	O	O	O	O	O	O
塑料和聚合物部件 (Plastic and Polymeric Parts)	O	O	O	O	O	O

O: 表示该有毒有害物质在该部件所有均质材料中的含量均在 SJ/T11363-2006 标准规定的限量要求以下。Indicates that the concentration of the hazardous substance in all homogeneous materials in the parts is below the relevant threshold of the SJ/T11363-2006 standard.

X: 表示该有毒有害物质至少在该部件的某一均质材料中的含量超出 SJ/T11363-2006 标准规定的限量要求。Indicates that the concentration of the hazardous substance of at least one of all homogeneous materials in the parts is above the relevant threshold of the SJ/T11363-2006 standard.

对销售之日的所售产品，本表显示供应链的电子信息产品可能包含这些物质。

This table shows where these substances may be found in the supply chain of electronic information products, as of the date of sale of the enclosed product.

此标志为针对所涉及产品的环保使用期标志. 某些零部件会有一个不同的环保使用期(例如,电池单元模块)贴在其产品上.

此环保使用期限只适用于产品是在产品手册中所规定的条件下工作.

The Environment- Friendly Use Period (EFUP) for all enclosed products and their parts are per the symbol shown here. The Environment- Friendly Use Period is valid only when the product is operated under the conditions defined in the product manual.

Contacting Support

Main Site	arubanetworks.com
Support Site	support.arubanetworks.com
Airheads Social Forums and Knowledge Base	community.arubanetworks.com
North American Telephone	1-800-943-4526 (Toll Free) 1-408-754-1200
International Telephones	arubanetworks.com/support-services/contact-support/
Software Licensing Site	hpe.com/networking/support
End-of-life Information	arubanetworks.com/support-services/end-of-life
Security Incident Response Team (SIRT)	Site: arubanetworks.com/support-service/security-bulletins/ Email: sirt@arubanetworks.com

Copyright

© Copyright 2018 Hewlett Packard Enterprise Development LP

Open Source Code

This product includes code licensed under the GNU General Public License, the GNU Lesser General Public License, and/or certain other open source licenses. A complete machine-readable copy of the source code corresponding to such code is available upon request. This offer is valid to anyone in receipt of this information and shall expire three years following the date of the final distribution of this product version by Hewlett Packard Enterprise Company. To obtain such source code, send a check or money order in the amount of US $10.00 to:

Hewlett Packard Enterprise Company
Attn: General Counsel
3000 Hanover Street
Palo Alto, CA 94304
USA

Warranty

This hardware product is protected by an Aruba warranty. For details, see Aruba Networks standard warranty terms and conditions.

Software End User License Agreement

To view the Software End User License Agreement, visit http://support.arubanetworks.com, open the **Documentation** tab, then select **Software End User License Agreement.**

a Hewlett Packard Enterprise company
www.arubanetworks.com
3333 Scott Boulevard
Santa Clara, California 95054
USA