DFS MEASUREMENT REPORT

FCC ID:	Q9DAPIN0735
Applicant:	Hewlett Packard Enterprise Company
Product:	ACCESS POINT
Model No.:	APIN0735
Trademark:	Hewlett Packard Enterprise, HPE aruba networking
FCC Classification:	Unlicensed National Information Infrastructure (NII)
FCC Rule Part(s):	Part 15 Subpart E (Section 15.407)
Type of Device:	Master
Result:	Complies
Received Date:	2023-11-09
Test Date:	2024-04-30

Reviewed By: Jame Yuan

Approved By: Robin Wu

ACCREDITED
TESTING LABORATORY
CERTIFICATE #3628.01

The test results relate only to the samples tested.
This equipment has been shown to be capable of compliance with the applicable technical standards as indicated in the measurement report and was tested in accordance with the measurement procedures specified in KDB 905462. Test results reported herein relate only to the item(s) tested.
The test report shall not be reproduced except in full without the written approval of MRT Technology (Suzhou) Co., Ltd.

Revision History

Report No.	Version	Description	Issue Date	Note
2311RSU031-U7	V01	Initial Report	2024-05-09	Valid

Note 1: The product is a variation on the existing APIN0734 that had FCC approval (FCC ID: Q9DAPIN0734). The differences are shown in the table below.

Parts of Product	Modification
Enclosure	Antenna location from internal to external
Others	PCB board has no change

Note 2: Spot-check tests were done on Statistical Performance Check item for 802.11be-EHT160 channel 5250MHz. Other test data refer to the original report no. 2311RSU031-U15.

CONTENTS

Description Page

1. General Information 5

1.1. Applicant 5
1.2. Manufacturer 5
1.3. Testing Facility 5
1.4. Product Information 6
1.5. Radio Specification under Test 7
1.6. Working Frequencies 8
1.7. Description of Antenna RF Port 9
1.8. Antenna Details 10

2. Test Configuration 11

2.1. Test Mode 11
2.2. Test Channel 11
2.3. Applied Standards 11
2.4. Test Environment Condition 11

3. DFS Detection Thresholds and Radar Test Waveforms 12

3.1. Applicability 12
3.2. DFS Devices Requirements 13
3.3. DFS Detection Threshold Values 15
3.4. Parameters of DFS Test Signals 16
3.5. Conducted Test Setup 19

4. Measuring Instrument 20

5. Test Result 21

5.1. Summary 21
5.2. Radar Waveform Calibration Measurement 22
5.2.1. Calibration Setup 22
5.2.2. Calibration Procedure 22
5.2.3. Calibration & Channel Loading Result 22
5.3. NII Detection Bandwidth Measurement 23
5.3.1. Test Limit 23
5.3.2. Test Procedure 23
5.3.3. Test Result 24
5.4. Initial Channel Availability Check Time Measurement 25
5.4.1. Test Limit 25
5.4.2. Test Procedure 25
5.4.3. Test Result 25

5.5. Radar Burst at the Beginning of the Channel Availability Check Time Measurement 26
5.5.1. Test Limit 26
5.5.2. Test Procedure 26
5.5.3. Test Result 26
5.6. Radar Burst at the End of the Channel Availability Check Time Measurement 27
5.6.1. Test Limit 27
5.6.2. Test Procedure 27
5.6.3. Test Result 27
5.7. In-Service Monitoring for Channel Move Time, Channel Closing Transmission Time and Non-Occupancy Period Measurement 28
5.7.1. Test Limit 28
5.7.2. Test Procedure 28
5.7.3. Test Result 28
5.8. Statistical Performance Check Measurement 29
5.8.1. Test Limit 29
5.8.2. Test Procedure 29
5.8.3. Test Result 29
Appendix A – Test Result 30
A.1 Calibration Test Result 30
A.2 Channel Loading Test Result 32
A.3 Statistical Performance Check 33
Appendix B – Test Setup Photograph 47
Appendix C – EUT Photograph 48

1. General Information

1.1. Applicant

Hewlett Packard Enterprise Company

6280 America Center Drive, San Jose CA 95002, United States

1.2. Manufacturer

Hewlett Packard Enterprise Company

6280 America Center Drive, San Jose CA 95002, United States

1.3. Testing Facility

☒	**Test Site – MRT Suzhou Laboratory**
	Laboratory Location (Suzhou - Wuzhong) D8 Building, No.2 Tian'edang Rd., Wuzhong Economic Development Zone, Suzhou, China **Laboratory Location (Suzhou - SIP)** 4b Building, Liando U Valley, No.200 Xingpu Rd., Shengpu Town, Suzhou Industrial Park, China
	Laboratory Accreditations
	A2LA: 3628.01 CNAS: L10551 FCC: CN1166 ISED: CN0001 VCCI: ☐R-20025 ☐G-20034 ☐C-20020 ☐T-20020 ☐R-20141 ☐G-20134 ☐C-20103 ☐T-20104
☐	**Test Site – MRT Shenzhen Laboratory**
	Laboratory Location (Shenzhen) 1G, Building A, Junxiangda Building, Zhongshanyuan Road West, Nanshan District, Shenzhen, China
	Laboratory Accreditations
	A2LA: 3628.02 CNAS: L10551 FCC: CN1284 ISED: CN0105
☐	**Test Site – MRT Taiwan Laboratory**
	Laboratory Location (Taiwan) No. 38, Fuxing 2nd Rd., Guishan Dist., Taoyuan City 333, Taiwan (R.O.C.)
	Laboratory Accreditations
	TAF: 3261 FCC: 291082, TW3261 ISED: TW3261

1.4. Product Information

Product Name	ACCESS POINT
Model No.	APIN0735
Serial No.	CNRQM52007
Software Version	ArubaOS_Aquila_10.7.0_8.0_cshen_c2c_89503
Wi-Fi Specification	802.11a/b/g/n/ac/ax/be
Bluetooth Specification	BLE only
ZigBee Specification	802.15.4
GNSS Specification	GPS, Galileo
Antenna Information	Refer to Section 1.8
Power Type	AC Adapter Input or PoE Input
Operating Environment	Indoor Use
Remark: The information of EUT was provided by the manufacturer, and the accuracy of the information shall be the responsibility of the manufacturer.	

1.5. Radio Specification under Test

Frequency Range	For 802.11a/n-HT20/ac-VHT20/ax-HE20/be-EHT20: 5260~5320MHz, 5500~5720MHz For 802.11n-HT40/ac-VHT40/ax-HE40/be-EHT40: 5270~5310MHz, 5510~5710MHz For 802.11ac-VHT80/ax-HE80/be-EHT80: 5290MHz, 5530MHz, 5610 MHz, 5690MHz For 802.11ac-VHT160/ax-HE160/be-EHT160: 5250MHz, 5570MHz
Type of Modulation	802.11a/n/ac: OFDM 802.11ax/be: OFDMA
Data Rate	802.11a: 6/9/12/18/24/36/48/54Mbps 802.11n: up to 300Mbps 802.11ac: up to 1732Mbps 802.11ax: up to 2402Mbps 802.11be: up to 2882Mbps
Uniform Spreading (For DFS Frequency Band)	For the 5250-5350MHz, 5470-5725 MHz bands, the Master device provides, on aggregate, uniform loading of the spectrum across all devices by selecting an operating channel among the available channels using a random algorithm.

1.6. Working Frequencies

802.11a/n-HT20/ac-VHT20/ax-HE20/be-EHT20

Channel	Frequency	Channel	Frequency	Channel	Frequency
52	5260 MHz	56	5280 MHz	60	5300 MHz
64	5320 MHz	100	5500 MHz	104	5520 MHz
108	5540 MHz	112	5560 MHz	116	5580 MHz
120	5600 MHz	124	5620 MHz	128	5640 MHz
132	5660 MHz	136	5680 MHz	140	5700 MHz
144	5720 MHz	--	--	--	--

802.11n-HT40/ac-VHT40/ax-HE40/be-EHT40

Channel	Frequency	Channel	Frequency	Channel	Frequency
54	5270 MHz	62	5310 MHz	102	5510 MHz
110	5550 MHz	118	5590 MHz	126	5630 MHz
134	5670 MHz	142	5710 MHz	--	--

802.11ac-VHT80/ax-HE80/be-EHT80

Channel	Frequency	Channel	Frequency	Channel	Frequency
58	5290 MHz	106	5530 MHz	122	5610 MHz
138	5690 MHz	--	--	--	--

802.11ac-VHT160/ax-HE160/be-EHT160

Channel	Frequency	Channel	Frequency	Channel	Frequency
50	5250 MHz	114	5570 MHz	--	--

1.7. Description of Antenna RF Port

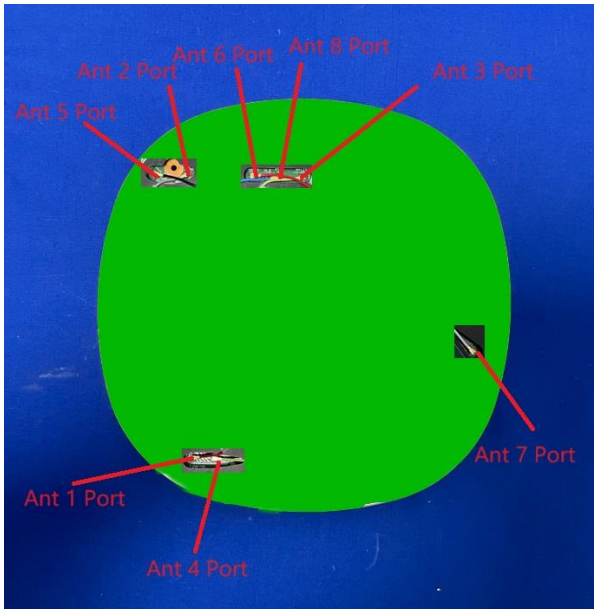

Antenna Port	RF Spec.			
	Wi-Fi 2.4G	Wi-Fi 5G	Wi-Fi 6G	BLE/ZigBee
Ant 1	--	--	● (Radio 2)	--
Ant 4	--	--	● (Radio 2)	--
Ant 2	● (Radio 0)	● (Radio 1)	--	--
Ant 5	● (Radio 0)	● (Radio 1)	--	--
Ant 3	--	--	--	● (Core 1)
Ant 6	--	--	--	● (Core 0)
Ant 8	--	--	--	● (Core 1)
Ant 7	GNSS			

1.8. Antenna Details

Antenna Type	Frequency Band (GHz)	T_X Paths	Directional Gain (dBi)	
			Uncorrelated	Correlated
Wi-Fi Antennas (Ant 2 & Ant 5)				
PIFA	5.15 ~ 5.9	2	4.08	4.08

Note:

1, The EUT supports Cyclic Delay Diversity (CDD) mode, and CDD signals are correlated.

2, The EUT also supports Beam Forming mode, and the Beam Forming support 802.11n/ac/ax/be, not include 802.11a/b/g.

3, For beamforming operation, Aruba OS automatically backs power down based on CDD power.

4, The antennas are cross-polarized, so the directional gain equals to the uncorrelated gain.

5, The detail calculation method of directional gain refers to antenna specification provided by the applicant.

2. Test Configuration

2.1. Test Mode

Mode 1: Operating under AP mode
Mode 2: Operating under Mesh mode

2.2. Test Channel

Test Mode	Test Channel	Test Frequency
802.11be-EHT160	50	5250 MHz

2.3. Applied Standards

According to the specifications of the manufacturer, the EUT must comply with the requirements of the following standards:

- FCC Part 15.407 Section (h)(2)
- KDB 905462 D02v02
- KDB 905462 D04v01

2.4. Test Environment Condition

Ambient Temperature	15 ~ 35°C
Relative Humidity	20 ~ 75%RH

3. DFS Detection Thresholds and Radar Test Waveforms

3.1. Applicability

The following table from FCC KDB 905462 D02 NII DFS Compliance Procedures New Rules v02 lists the applicable requirements for the DFS testing.

Requirement	Operational Mode		
	Master	Client Without Radar Detection	Client With Radar Detection
Non-Occupancy Period	Yes	Not required	Yes
DFS Detection Threshold	Yes	Not required	Yes
Channel Availability Check Time	Yes	Not required	Not required
U-NII Detection Bandwidth	Yes	Not required	Yes

Table 3-1: Applicability of DFS Requirements Prior to Use of a Channel

Requirement	Operational Mode	
	Master Device or Client With Radar Detection	Client Without Radar Detection
DFS Detection Threshold	Yes	Not required
Channel Closing Transmission Time	Yes	Yes
Channel Move Time	Yes	Yes
U-NII Detection Bandwidth	Yes	Not required

Additional requirements for devices with multiple bandwidth modes	Master Device or Client with Radar Detection	Client Without Radar Detection
U-NII Detection Bandwidth and Statistical Performance Check	All BW modes must be tested	Not required
Channel Move Time and Channel Closing Transmission Time	Test using widest BW mode available	Test using the widest BW mode available for the link
All other tests	Any single BW mode	Not required
Note: Frequencies selected for statistical performance check should include several frequencies within the radar detection bandwidth and frequencies near the edge of the radar detection bandwidth. For 802.11 devices it is suggested to select frequencies in each of the bonded 20 MHz channels and the channel center frequency.		

Table 3-2: Applicability of DFS Requirements during normal operation

3.2. DFS Devices Requirements

Per FCC KDB 905462 D02 NII DFS Compliance Procedures New Rules v02 the following are the requirements for Master Devices:

(a) The Master Device will use DFS in order to detect Radar Waveforms with received signal strength above the DFS Detection Threshold in the 5250 ~ 5350 MHz and 5470 ~ 5725 MHz bands. DFS is not required in the 5150 ~ 5250 MHz or 5725 ~ 5825 MHz bands.

(b) Before initiating a network on a Channel, the Master Device will perform a Channel Availability Check for a specified time duration (Channel Availability Check Time) to ensure that there is no radar system operating on the Channel, using DFS described under subsection a) above.

(c) The Master Device initiates a U-NII network by transmitting control signals that will enable other U-NII devices to Associate with the Master Device.

(d) During normal operation, the Master Device will monitor the Channel (In-Service Monitoring) to ensure that there is no radar system operating on the Channel, using DFS described under a).

(e) If the Master Device has detected a Radar Waveform during In-Service Monitoring as described under d), the Operating Channel of the U-NII network is no longer an Available Channel. The Master Device will instruct all associated Client Device(s) to stop transmitting on this Channel within the Channel Move Time. The transmissions during the Channel Move Time will be limited to the Channel Closing Transmission Time.

(f) Once the Master Device has detected a Radar Waveform it will not utilize the Channel for the duration of the Non-Occupancy Period.

(g) If the Master Device delegates the In-Service Monitoring to a Client Device, then the combination will be tested to the requirements described under d) through f) above.

Channel Move Time and Channel Closing Transmission Time requirements are listed in the following table.

Parameter	Value
Non-occupancy period	Minimum 30 minutes
Channel Availability Check Time	60 seconds
Channel Move Time	10 seconds See Note 1.
Channel Closing Transmission Time	200 milliseconds + an aggregate of 60 milliseconds over remaining 10 second period. See Notes 1 and 2.
U-NII Detection Bandwidth	Minimum 100% of the U-NII 99% transmission power bandwidth. See Note 3.
Note 1: Channel Move Time and the Channel Closing Transmission Time should be performed with Radar Type 0. The measurement timing begins at the end of the Radar Type 0 burst. Note 2: The Channel Closing Transmission Time is comprised of 200 milliseconds starting at the beginning of the Channel Move Time plus any additional intermittent control signals required to facilitate a Channel move (an aggregate of 60 milliseconds) during the remainder of the 10 second period. The aggregate duration of control signals will not count quiet periods in between transmissions. Note 3: During the U-NII Detection Bandwidth detection test, radar type 0 should be used. For each frequency step the minimum percentage of detection is 90 percent. Measurements are performed with no data traffic.	

Table 3-3: DFS Response Requirements

3.3. DFS Detection Threshold Values

The DFS detection thresholds are defined for Master devices and Client Devices with In-service monitoring.

These detection thresholds are listed in the following table.

Maximum Transmit Power	Value (See Notes 1, 2, and 3)
EIRP ≥ 200 milliwatt	-64 dBm
EIRP < 200 milliwatt and power spectral density < 10 dBm/MHz	-62 dBm
EIRP < 200 milliwatt that do not meet the power spectral density requirement	-64 dBm
Note 1: This is the level at the input of the receiver assuming a 0 dBi receive antenna. Note 2: Throughout these test procedures an additional 1 dB has been added to the amplitude of the test transmission waveforms to account for variations in measurement equipment. This will ensure that the test signal is at or above the detection threshold level to trigger a DFS response. Note3: EIRP is based on the highest antenna gain. For MIMO devices refer to KDB Publication 662911 D01.	

Table 3-4: Detection Thresholds for Master Devices and Client Devices with Radar Detection

3.4. Parameters of DFS Test Signals

This section provides the parameters for required test waveforms, minimum percentage of successful detections, and the minimum number of trials that must be used for determining DFS conformance. Step intervals of 0.1 microsecond for Pulse Width, 1 microsecond for PRI, 1 MHz for chirp width and 1 for the number of pulses will be utilized for the random determination of specific test waveforms.

Short Pulse Radar Test Waveforms

Radar Type	Pulse Width (μsec)	PRI (μsec)	Number of Pulses	Minimum Percentage of Successful Detection	Minimum Number of Trials
0	1	1428	18	See Note 1	See Note 1
1	1	Test A: 15 unique PRI values randomly selected from the list of 23 PRI values in Table 3-6	$\text{Roundup}\left\{\left(\frac{1}{360}\right)\cdot\left(\frac{19\cdot 10^6}{\text{PRI}_{\text{usec}}}\right)\right\}$	60%	30
		Test B: 15 unique PRI values randomly selected within the range of 518-3066 μsec, with a minimum increment of 1 μsec, excluding PRI values selected in Test A			
2	1-5	150-230	23-29	60%	30
3	6-10	200-500	16-18	60%	30
4	11-20	200-500	12-16	60%	30
Aggregate (Radar Types 1-4)				80%	120
Note: Short Pulse Radar Type 0 should be used for the detection bandwidth test, channel move time, and channel closing time tests.					

Table 3-5: Parameters for Short Pulse Radar Waveforms

A minimum of 30 unique waveforms are required for each of the Short Pulse Radar Types 2 through 4. If more than 30 waveforms are used for Short Pulse Radar Types 2 through 4, then each additional waveform must also be unique and not repeated from the previous waveforms.

Pulse Repetition Frequency Number	Pulse Repetition Frequency (Pulses Per Second)	Pulse Repetition Interval (Microseconds)
1	1930.5	518
2	1858.7	538
3	1792.1	558
4	1730.1	578
5	1672.2	598
6	1618.1	618
7	1567.4	638
8	1519.8	658
9	1474.9	678
10	1432.7	698
11	1392.8	718
12	1355	738
13	1319.3	758
14	1285.3	778
15	1253.1	798
16	1222.5	818
17	1193.3	838
18	1165.6	858
19	1139	878
20	1113.6	898
21	1089.3	918
22	1066.1	938
23	326.2	3066

Table 3-6: Pulse Repetition Intervals Values for Test A

Long Pulse Radar Test Waveform

Radar Type	Pulse Width (μsec)	Chirp Width (MHz)	PRI (μsec)	Number of Pulses per Burst	Number of Bursts	Minimum Percentage of Successful Detection	Minimum Number of Trials
5	50 - 100	5 - 20	1000 - 2000	1 - 3	8 - 20	80%	30

Table 3-7: Parameters for Long Pulse Radar Waveforms

The parameters for this waveform are randomly chosen. Thirty unique waveforms are required for the Long Pulse Radar Type waveforms. If more than 30 waveforms are used for the Long Pulse Radar Type waveforms, then each additional waveform must also be unique and not repeated from the previous waveforms.

Frequency Hopping Radar Test Waveform

Radar Type	Pulse Width (μsec)	PRI (μsec)	Pulses Per Hop	Hopping Rate (kHz)	Hopping Sequence Length (msec)	Minimum Percentage of Successful Detection	Minimum Number of Trials
6	1	333	9	0.333	300	70%	30

Table 3-8: Parameters for Frequency Hopping Radar Waveforms

For the Frequency Hopping Radar Type, the same Burst parameters are used for each waveform. The hopping sequence is different for each waveform and a 100-length segment is selected from the hopping sequence defined by the following algorithm:

The first frequency in a hopping sequence is selected randomly from the group of 475 integer frequencies from 5250 – 5724MHz. Next, the frequency that was just chosen is removed from the group and a frequency is randomly selected from the remaining 474 frequencies in the group. This process continues until all 475 frequencies are chosen for the set. For selection of a random frequency, the frequencies remaining within the group are always treated as equally likely.

3.5. Conducted Test Setup

The FCC KDB 905462 D02 NII DFS Compliance Procedures New Rules v02 describes a radiated test setup and a conducted test setup. The conducted test setup was used for this testing. Figure 3-1 shows the typical test setup.

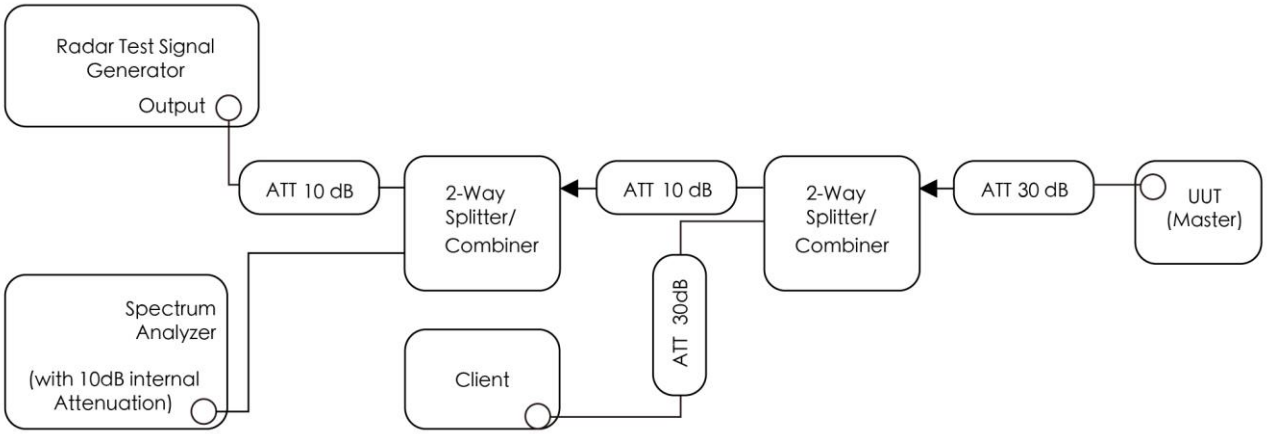

Figure 3-1: Conducted Test Setup where UUT is a Master and Radar Test Waveforms are injected into the Master

4. Measuring Instrument

Instrument Name	Manufacturer	Model No.	Asset No.	Cali. Interval	Cal. Due Date	Test Site
Shielding Room	HUAMING	WZ-SR4	MRTSUE06441	N/A	N/A	WZ-SR4
Signal Generator	Keysight	N5182B	MRTSUE06451	1 year	2024-06-29	WZ-SR4
Signal Analyzer	Keysight	N9010B	MRTSUE07027	1 year	2024-10-23	WZ-SR4
Thermohygrometer	testo	608-H1	MRTSUE11256	1 year	2024-10-19	WZ-SR4
Signal Analyzer	Agilent	N9020A	MRTSUE06106	1 year	2025-02-03	WZ-SR4

Client Information

Instrument	Manufacturer	Type No.	Certification Number
Wi-Fi Module	Intel	BE200NGW	FCC ID: PD9BE200NG

Software	Version	Manufacturer	Function
DFS Tool	V 6.9.2	Agilent	DFS Test Software
Pulse Sequencer	V 2.0	R&S	DFS Test Software
Signal Studio	V2.2.0.0	Keysight	DFS Test Software

5. Test Result

5.1. Summary

Parameter	Verdict	Reference
NII Detection Bandwidth Measurement	Pass	Section 5.3
Initial Channel Availability Check Time	Pass	Section 5.4
Radar Burst at the Beginning of the Channel Availability Check Time	Pass	Section 5.5
Radar Burst at the End of the Channel Availability Check Time	Pass	Section 5.6
In-Service Monitoring for Channel Move Time, Channel Closing Transmission Time	Pass	Section 5.7
Non-Occupancy Period	Pass	Section 5.7
Statistical Performance Check	Pass	Section 5.8

Note 1: For mesh mode, we just test the In-service monitoring item declared by the applicant.

Note 2: We used the worst-case level -64dBm as DFS detection thresholds for all DFS testing.

Note 3: The conducted test method was used for all items.

5.2. Radar Waveform Calibration Measurement

5.2.1. Calibration Setup

The conducted test setup was used for this calibration testing. Figure 3-2 shows the typical test setup.

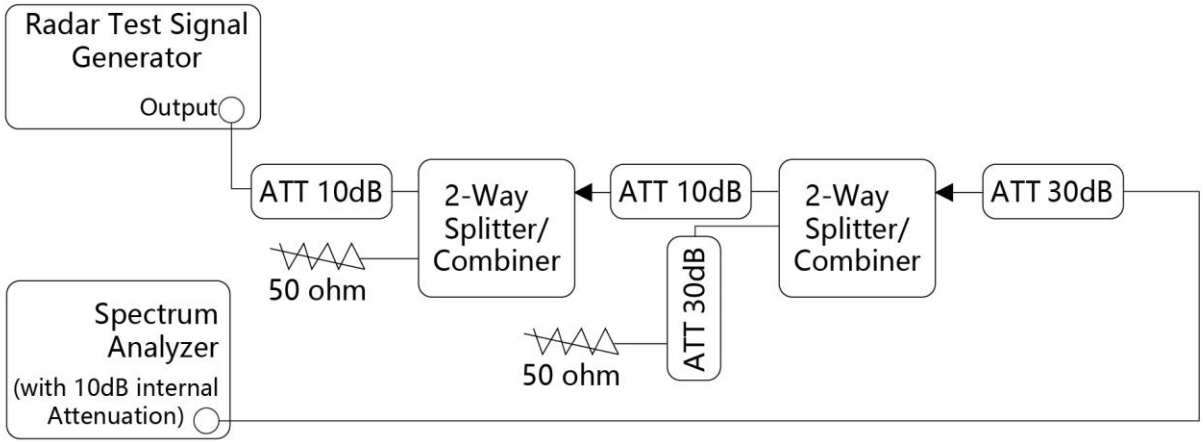

Figure 3-2: Conducted Test Setup

5.2.2. Calibration Procedure

The Interference Radar Detection Threshold Level is (-64dBm) + (0) [dBi] + 1 dB= -63 dBm that had been taken into account the output power range and antenna gain. The above equipment setup was used to calibrate the conducted Radar Waveform. A vector signal generator was utilized to establish the test signal level for each radar type. During this process there were replace 50ohm terminal form Master and Client device and no transmissions by either the Master or Client Device. The spectrum analyzer was switched to the zero span (Time Domain) at the frequency of the Radar Waveform generator. Peak detection was used. The spectrum analyzer resolution bandwidth (RBW) and video bandwidth (VBW) were set to at least 3MHz. The vector signal generator amplitude was set so that the power level measured at the spectrum analyzer was (-64dBm) + (0) [dBi] + 1 dB= -63dBm. Capture the spectrum analyzer plots on short pulse radar types, long pulse radar type and hopping radar waveform.

5.2.3. Calibration & Channel Loading Result

Refer to 2311RSU031-U15 Appendix A.1&A.2, spot check test data refer to Appendix A.1&A.2 in this report.

5.3. NII Detection Bandwidth Measurement

5.3.1. Test Limit

Minimum 100% of the NII 99% transmission power bandwidth. During the U-NII Detection Bandwidth detection test, each frequency step the minimum percentage of detection is 90 percent. Measurements are performed with no data traffic.

5.3.2. Test Procedure

1. Adjust the equipment to produce a single Burst of any one of the Short Pulse Radar Types 0-4 in Table 3-5 at the center frequency of the EUT Operating Channel at the specified DFS Detection Threshold level.
2. The generating equipment is configured as shown in the Conducted Test Setup above section 3.5.
3. The EUT is set up as a stand-alone device (no associated Client or Master, as appropriate) and no traffic. Frame based systems will be set to a talk/listen ratio reflecting the worst case (maximum) that is user configurable during this test.
4. Generate a single radar Burst, and note the response of the EUT. Repeat for a minimum of 10 trials. The EUT must detect the Radar Waveform using the specified U-NII Detection Bandwidth criterion shown in Table 3-5. In cases where the channel bandwidth may exceed past the DFS band edge on specific channels (i.e., 802.11ac or wideband frame based systems) select a channel that has the entire emission bandwidth within the DFS band. If this is not possible, test the detection BW to the DFS band edge.
5. Starting at the center frequency of the UUT operating Channel, increase the radar frequency in 5 MHz steps, repeating the above test sequence, until the detection rate falls below the U-NII Detection Bandwidth criterion specified in Table 3-3. Repeat this measurement in 1MHz steps at frequencies 5 MHz below where the detection rate begins to fall. Record the highest frequency (denote as F_H) at which detection is greater than or equal to the U-NII Detection Bandwidth criterion. Recording the detection rate at frequencies above F_H is not required to demonstrate compliance.
6. Starting at the center frequency of the EUT operating Channel, decrease the radar frequency in 1 MHz steps, repeating the above item 4 test sequence, until the detection rate falls below the U-NII Detection Bandwidth criterion. Record the lowest frequency (denote as F_L) at which detection is greater than or equal to the U-NII Detection Bandwidth criterion. Recording the detection rate at frequencies below F_L is not required to demonstrate compliance.
7. The U-NII Detection Bandwidth is calculated as follows: U-NII Detection Bandwidth = $F_H – F_L$
8. The U-NII Detection Bandwidth must be at least 100% of the EUT transmitter 99% power, otherwise, the

EUT does not comply with DFS requirements.

5.3.3. Test Result

Refer to 2311RSU031-U15 Appendix A.3.

5.4. Initial Channel Availability Check Time Measurement

5.4.1. Test Limit

The EUT shall perform a Channel Availability Check to ensure that there is no radar operating on the channel. After power-up sequence, receive at least 1 minute on the intended operating frequency.

5.4.2. Test Procedure

1. The U-NII devices will be powered on and be instructed to operate on the appropriate U-NII Channel that must incorporate DFS functions. At the same time the EUT is powered on, the spectrum analyzer will be set to zero span mode with a 3 MHz RBW and 3 MHz VBW on the Channel occupied by the radar (Chr) with a 2.5 minutes sweep time. The spectrum analyzer's sweep will be started at the same time power is applied to the U-NII device.
2. The EUT should not transmit any beacon or data transmissions until at least 1 minute after the completion of the power-on cycle.
3. Confirm that the EUT initiates transmission on the channel. Measurement system showing its nominal noise floor is marker1.

5.4.3. Test Result

Refer to 2311RSU031-U15 Appendix A.4.

5.5. Radar Burst at the Beginning of the Channel Availability Check Time Measurement

5.5.1. Test Limit

In beginning of the Channel Availability Check (CAC) Time, radar is detected on this channel, select another intended channel and perform a CAC on that channel.

5.5.2. Test Procedure

1. The steps below define the procedure to verify successful radar detection on the selected Channel during a period equal to the Channel Availability Check Time and avoidance of operation on that Channel when a radar Burst with a level equal to the DFS Detection Threshold + 1 dB occurs at the beginning of the Channel Availability Check Time.
2. The EUT is in completion power-up cycle (from T0 to T1). T1 denotes the instant when the EUT has completed its power-up sequence. The Channel Availability Check Time commences at instant T1 and will end no sooner than T1 + 60 seconds. A single Burst of one of Short Pulse Radar Types 0-4 at DFS Detection Threshold + 1 dB will commence within a 6 second window starting at T1.
3. Visual indication on the EUT of successful detection of the radar Burst will be recorded and reported. Observation of emissions will continue for 2.5 minutes after the radar Burst has been generated. Verify that during the 2.5 minutes measurement window no EUT transmissions occurred.

5.5.3. Test Result

Refer to 2311RSU031-U15 Appendix A.5.

5.6. Radar Burst at the End of the Channel Availability Check Time Measurement

5.6.1. Test Limit

In the end of Channel Availability Check (CAC) Time, radar is detected on this channel, select another intended channel and perform a CAC on that channel.

5.6.2. Test Procedure

1. The steps below define the procedure to verify successful radar detection on the selected Channel during a period equal to the Channel Availability Check Time and avoidance of operation on that Channel when a radar Burst with a level equal to the DFS Detection Threshold + 1 dB occurs at the beginning of the Channel Availability Check Time.
2. The EUT is powered on at T0. T1 denotes the instant when the EUT has completed its power-up sequence. The Channel Availability Check Time commences at instant T1 and will end no sooner thanT1 + 60 seconds. A single Burst of one of Short Pulse Radar Types 0-4 at DFS Detection Threshold + 1 dB will commence within a 6 second window starting at T1+ 54 seconds.
3. Visual indication on the EUT of successful detection of the radar Burst will be recorded and reported. Observation of emissions will continue for 2.5 minutes after the radar Burst has been generated. Verify that during the 2.5 minutes measurement window no EUT transmissions occurred.

5.6.3. Test Result

Refer to 2311RSU031-U15 Appendix A.6.

5.7. In-Service Monitoring for Channel Move Time, Channel Closing Transmission Time and Non-Occupancy Period Measurement

5.7.1. Test Limit

The EUT has In-Service Monitoring function to continuously monitor the radar signals. If the radar is detected, must leave the channel (Shutdown). The Channel Move Time to cease all transmissions on the current channel upon detection of a Radar Waveform above the DFS Detection Threshold within 10 sec. The total duration of Channel Closing Transmission Time is 260ms, consisting of data signals and the aggregate of control signals, by a U-NII device during the Channel Move Time. The Non-Occupancy Period time is 30 minutes during which a Channel will not be utilized after a Radar Waveform is detected on that Channel.

5.7.2. Test Procedure

1. The test should be performed with Radar Type 0. The measurement timing begins at the end of the Radar Type 0.
2. When the radar burst with a level equal to the DFS Detection Threshold + 1dB is generated on the Operating Channel of the U-NII device. A U-NII device operating as a Master Device will associate with the Client Device at Channel. Stream the MPEG test file from the Master Device to the Client Device on the selected Channel for the entire period of the test. At time T0 the Radar Waveform generator sends a Burst of pulses for each of the radar types at Detection Threshold + 1dB.
3. Observe the transmissions of the EUT at the end of the radar Burst on the Operating Channel. Measure and record the transmissions from the EUT during the observation time (Channel Move Time).
4. Measurement of the aggregate duration of the Channel Closing Transmission Time method. With the spectrum analyzer set to zero span tuned to the center frequency of the EUT operating channel at the radar simulated frequency, peak detection, and max hold, the dwell time per bin is given by: Dwell (1.5ms) = S (12 sec) / B (8000); where Dwell is the dwell time per spectrum analyzer sampling bin, S is the sweep time and B is the number of spectrum analyzer sampling bins. An upper bound of the aggregate duration of the intermittent control signals of Channel Closing Transmission Time is calculated by: C = N X Dwell; where C is the Closing Time, N is the number of spectrum analyzer sampling bins showing a U-NII transmission and Dwell is the dwell time per bin.
5. Measure the EUT for more than 30 minutes following the channel close/move time to verify that the EUT does not resume any transmissions on this Channel.

5.7.3. Test Result

Refer to 2311RSU031-U15 Appendix A.7.

5.8. Statistical Performance Check Measurement

5.8.1. Test Limit

The minimum percentage of successful detection requirements found in below table when a radar burst with a level equal to the DFS Detection Threshold + 1dB is generated on the Operating Channel of the U-NII device (In- Service Monitoring).

Radar Type	Minimum Number of Trails	Detection Probability
0	30	Pd ≥ 60%
1	30(15 of test A and 15 of test B)	Pd ≥ 60%
2	30	Pd ≥ 60%
3	30	Pd ≥ 60%
4	30	Pd ≥ 60%
Aggregate (Radar Types 1-4)	120	Pd ≥ 80%
5	30	Pd ≥ 80%
6	30	Pd ≥ 70%
Note: The percentage of successful detection is calculated by: (Total Waveform Detections / Total Waveform Trails) * 100 = Probability of Detection Radar Waveform In addition an aggregate minimum percentage of successful detection across all Short Pulse Radar Types 1-4 is required and is calculated as follows: (Pd1 + Pd2 + Pd3 + Pd4) / 4.		

5.8.2. Test Procedure

1. Stream the MPEG test file from the Master Device to the Client Device on the test Channel for the entire period of the test.
2. At time T0 the Radar Waveform generator sends the individual waveform for each of the Radar Types 1-6, at levels equal to the DFS Detection Threshold + 1dB, on the Operating Channel.
3. Observe the transmissions of the EUT at the end of the Burst on the Operating Channel for duration greater than 10 seconds for Short Pulse Radar Types 0 to ensure detection occurs.
4. Observe the transmissions of the EUT at the end of the Burst on the Operating Channel for duration greater than 22 seconds for Long Pulse Radar Type 5 to ensure detection occurs.
5. The device can utilize a test mode to demonstrate when detection occurs to prevent the need to reset the device between trial runs.
6. The Minimum number of trails, minimum percentage of successful detection and the average minimum percentage of successful detection are found in below table.

5.8.3. Test Result

Refer to 2311RSU031-U15 Appendix A.8, spot check test data refer to Appendix A.3 in this report.

Appendix A – Test Result

A.1 Calibration Test Result

Test Site	WZ-SR4	Test Engineer	Jake Lan
Test Date	2024-04-30	Test Item	Radar Waveform Calibration
Test Mode	Mode 1		

Radar Waveform Calibration	
Radar #0	Radar #1(Test A) PRI = 778us and the number of pulses = 68
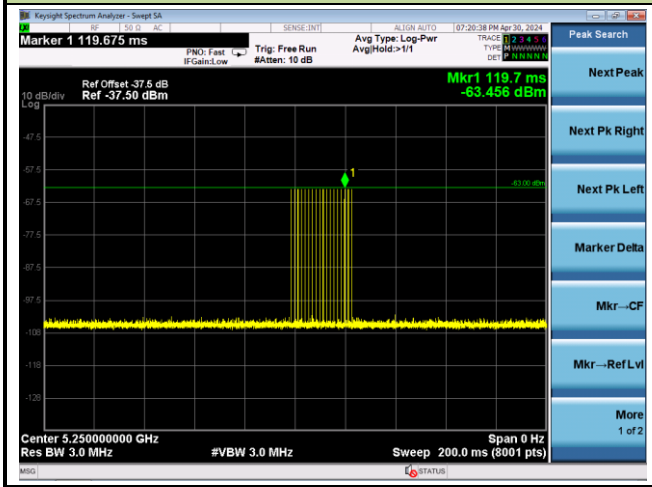	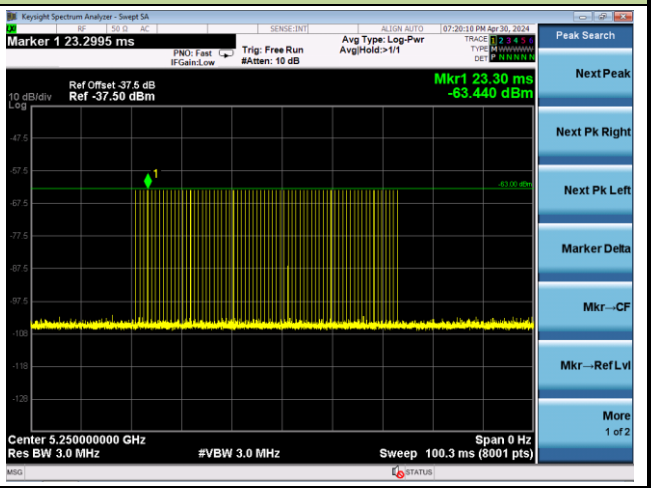
Radar #1(Test B) PRI = 1195us and the number of pulses = 45	Radar #2
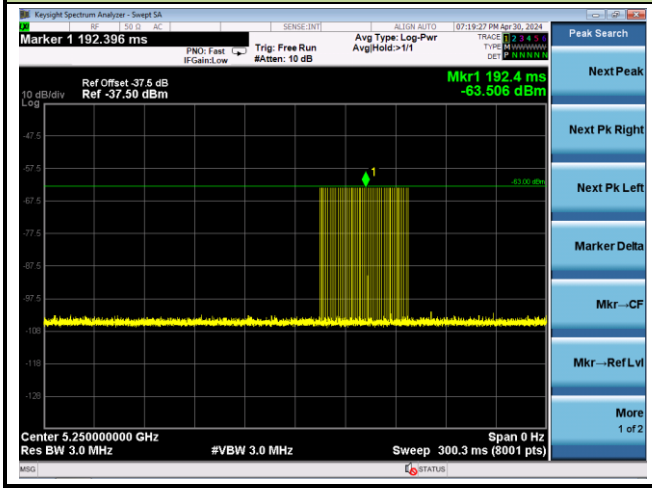	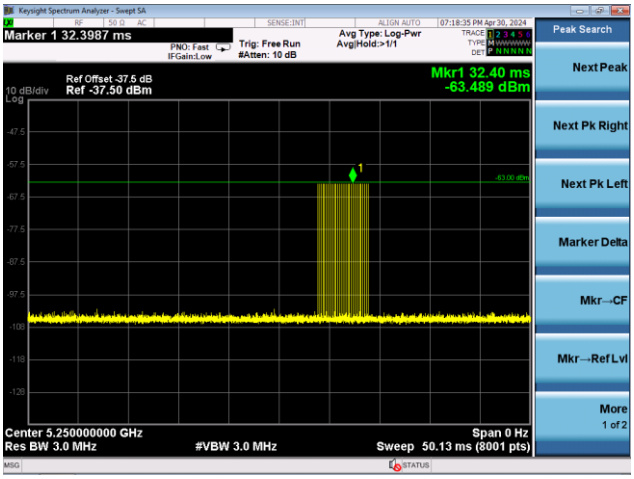

Radar #3	Radar #4
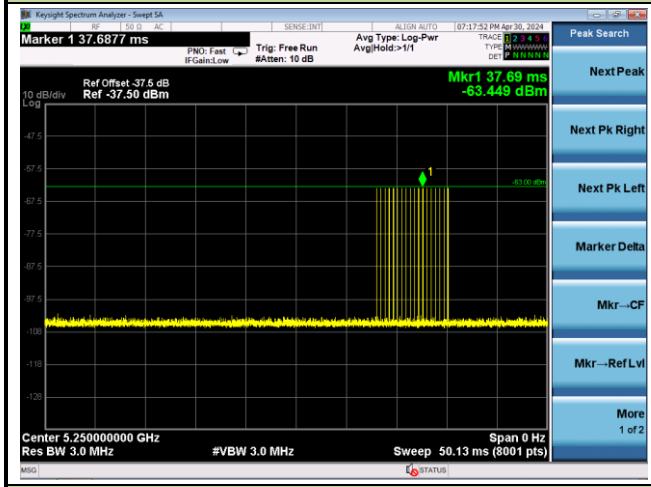	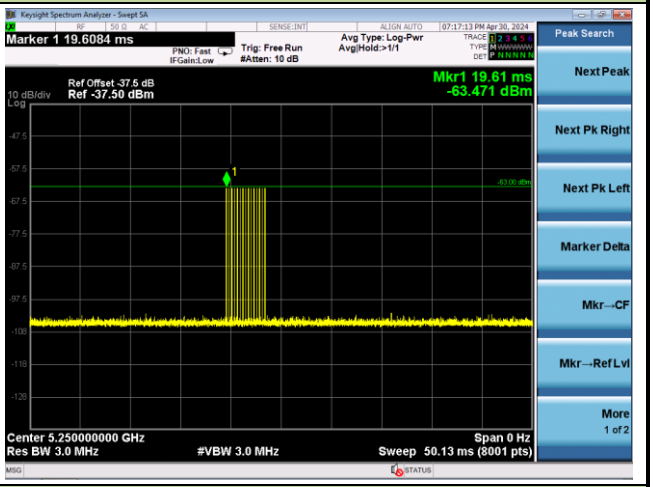
Radar #5	**Radar #6**
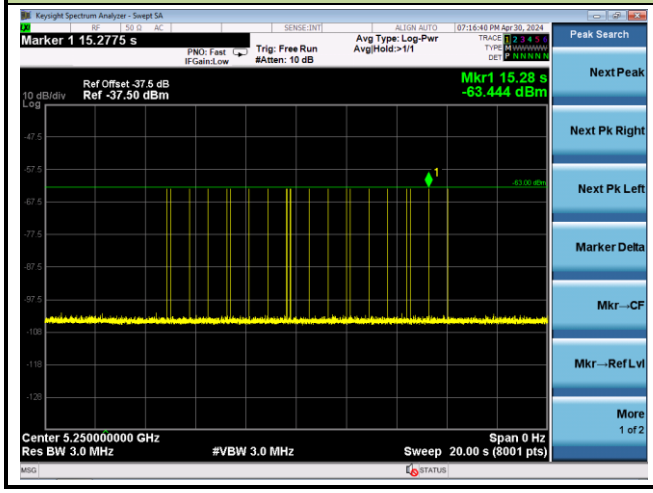	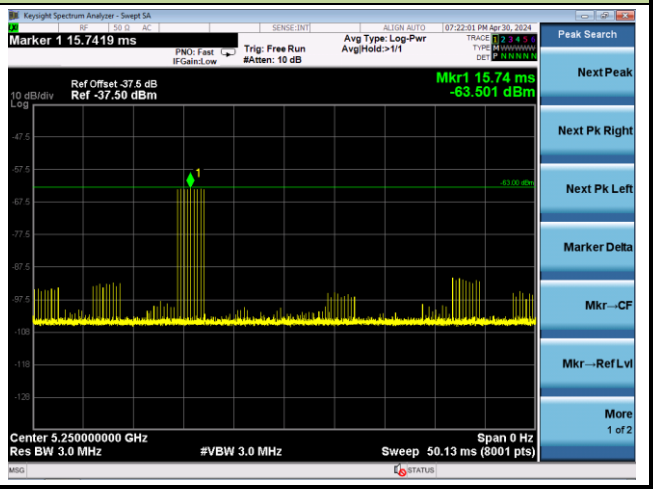

A.2 Channel Loading Test Result

Test Site	WZ-SR4	Test Engineer	Jake Lan
Test Date	2024-04-30	Test Item	Channel Loading
Test Mode	Mode 1		

802.11be-EHT160 (5250MHz)	
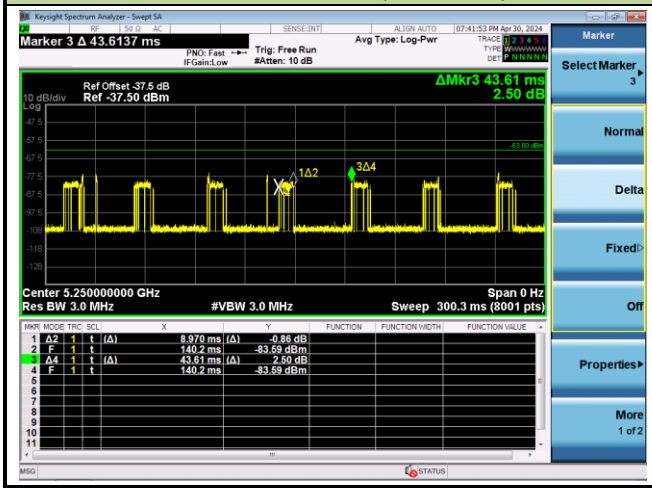	

Test Mode	Test Frequency	Packet ratio	Requirement ratio	Test Result
802.11be-EHT160	5250 MHz	20.57%	≥ 17%	Pass
Note: System testing was performed with the designated iperf test file. This file is used by IP and Frame based systems for loading the test channel during the In-service compliance testing of the U-NII device. Packet ratio = Time On / (Time On + Off Time).				

A.3 Statistical Performance Check

Test Site	WZ-SR4	Test Engineer	Jake Lan
Test Date	2024-04-30		
Test Item	Radar Statistical Performance Check (802.11be-EHT160 – 5250MHz)		

Radar Type 1-4 - Radar Statistical Performance								
Trial	Radar Type 1		Radar Type 2		Radar Type 3		Radar Type 4	
	Frequency (MHz)	1=detect 0=no detect	Frequency (MHz)	1=detect 0=no detect	Frequency (MHz)	1=detect 0=no detect	Frequency (MHz)	1=detect 0=no detect
0	5276	1	5290	1	5290	1	5250	1
1	5290	1	5329	1	5294	1	5329	1
2	5272	1	5321	1	5255	1	5290	1
3	5250	1	5256	0	5279	0	5275	1
4	5266	1	5284	1	5329	0	5315	1
5	5306	1	5305	1	5306	1	5307	1
6	5287	1	5301	1	5250	1	5305	1
7	5329	1	5322	1	5303	0	5300	1
8	5294	1	5313	1	5305	1	5255	1
9	5265	1	5250	1	5307	1	5328	1
Probability:	100.0%		90.0%		70.0%		100.0%	
Aggregate:	**90.0% (>80%)**							

Radar Type 1 - Radar Waveform

	Trial Id	Radar Type	Pulse Width (us)	PRI (us)	Number of Pulses	Waveform Length (us)
Download	0	Type 1	1.0	678.0	78	52884.0
Download	1	Type 1	1.0	718.0	74	53132.0
Download	2	Type 1	1.0	798.0	67	53466.0
Download	3	Type 1	1.0	938.0	57	53466.0
Download	4	Type 1	1.0	618.0	86	53148.0
Download	5	Type 1	1.0	658.0	81	53298.0
Download	6	Type 1	1.0	858.0	62	53196.0
Download	7	Type 1	1.0	578.0	92	53176.0
Download	8	Type 1	1.0	758.0	70	53060.0
Download	9	Type 1	1.0	878.0	61	53558.0

Radar Type 2 - Radar Waveform

	Trial Id	Radar Type	Pulse Width (us)	PRI (us)	Number of Pulses	Waveform Length (us)
Download	0	Type 2	2.4	196.0	25	4900.0
Download	1	Type 2	1.8	214.0	24	5136.0
Download	2	Type 2	4.2	197.0	28	5516.0
Download	3	Type 2	3.2	182.0	26	4732.0
Download	4	Type 2	4.5	208.0	29	6032.0
Download	5	Type 2	1.1	192.0	23	4416.0
Download	6	Type 2	3.7	163.0	27	4401.0
Download	7	Type 2	3.7	203.0	27	5481.0
Download	8	Type 2	4.3	193.0	28	5404.0
Download	9	Type 2	4.4	178.0	28	4984.0

Radar Type 3 - Radar Waveform

	Trial Id	Radar Type	Pulse Width (us)	PRI (us)	Number of Pulses	Waveform Length (us)
Download	0	Type 3	7.4	437.0	17	7429.0
Download	1	Type 3	6.8	273.0	16	4368.0
Download	2	Type 3	9.2	297.0	18	5346.0
Download	3	Type 3	8.2	458.0	17	7786.0
Download	4	Type 3	9.5	450.0	18	8100.0
Download	5	Type 3	6.1	399.0	16	6384.0
Download	6	Type 3	8.7	407.0	18	7326.0
Download	7	Type 3	8.7	327.0	17	5559.0
Download	8	Type 3	9.3	351.0	18	6318.0
Download	9	Type 3	9.4	464.0	18	8352.0

Radar Type 4 - Radar Waveform

	Trial Id	Radar Type	Pulse Width (us)	PRI (us)	Number of Pulses	Waveform Length (us)
Download	0	Type 4	14.2	437.0	13	5681.0
Download	1	Type 4	12.9	273.0	13	3549.0
Download	2	Type 4	18.3	297.0	16	4752.0
Download	3	Type 4	15.9	458.0	14	6412.0
Download	4	Type 4	18.9	450.0	16	7200.0
Download	5	Type 4	11.3	399.0	12	4788.0
Download	6	Type 4	17.1	407.0	15	6105.0
Download	7	Type 4	17.0	327.0	15	4905.0
Download	8	Type 4	18.5	351.0	16	5616.0
Download	9	Type 4	18.5	464.0	16	7424.0

Radar Type 5 - Radar Statistical Performance		
Trail #	Test Freq. (MHz)	1=Detection 0=No Detection
0	5290.0	1
1	5290.0	1
2	5290.0	1
3	5290.0	1
4	5252.4	1
5	5252.0	1
6	5257.6	0
7	5321.4	1
8	5323.8	1
9	5325.0	1
Detection Percentage (%)		**90%**

Type 5 Radar Waveform_0

Burst Offset (us)	Pulse Width (us)	Chirp Width (MHz)	Number of Pulses per Burst	PRI-1 (us)	PRI-2 (us)	PRI-3 (us)
598995.0	67.9	10	2	1817.0	1097.0	-
842156.0	60.6	10	1	1329.0	-	-
85416.0	90.2	10	3	1062.0	1580.0	1933.0
327193.0	77.1	10	2	1865.0	1629.0	-
567571.0	93.7	10	3	1871.0	1997.0	1914.0
811909.0	51.9	10	1	1837.0	-	-
55691.0	83.9	10	3	1985.0	1225.0	1136.0
297667.0	83.1	10	2	1105.0	1571.0	-
537888.0	91.5	10	3	1979.0	1957.0	1810.0
779477.0	91.6	10	3	1875.0	1593.0	1703.0
25945.0	87.6	10	3	1266.0	1710.0	1416.0
268201.0	61.9	10	1	1455.0	-	-

Type 5 Radar Waveform_1

Burst Offset (us)	Pulse Width (us)	Chirp Width (MHz)	Number of Pulses per Burst	PRI-1 (us)	PRI-2 (us)	PRI-3 (us)
610784.0	88.1	8	3	1538.0	1481.0	1995.0
901887.0	82.0	8	2	1426.0	1889.0	-
1191360.0	90.1	8	3	1057.0	1563.0	1459.0
285627.0	91.2	8	3	1303.0	1022.0	1166.0
577003.0	52.1	8	1	1028.0	-	-
866736.0	74.0	8	2	1334.0	1152.0	-
1158488.0	55.1	8	1	1124.0	-	-
249655.0	99.7	8	3	1256.0	1480.0	1844.0
539341.0	98.2	8	3	1815.0	1604.0	1693.0
829760.0	93.2	8	3	1019.0	1269.0	1930.0

Type 5 Radar Waveform_2

Burst Offset (us)	Pulse Width (us)	Chirp Width (MHz)	Number of Pulses per Burst	PRI-1 (us)	PRI-2 (us)	PRI-3 (us)
620285.0	84.4	17	3	1153.0	1477.0	1649.0
118835.0	73.5	17	2	1063.0	1607.0	-
279013.0	99.5	17	3	1164.0	1731.0	1820.0
441099.0	73.8	17	2	1390.0	1002.0	-
600190.0	87.6	17	3	1488.0	1201.0	1928.0
98629.0	85.5	17	3	1664.0	1679.0	1804.0
259206.0	99.8	17	3	1802.0	1813.0	1180.0
421004.0	82.5	17	2	1476.0	1312.0	-
583196.0	52.9	17	1	1441.0	-	-
79292.0	65.6	17	1	1579.0	-	-
240266.0	82.2	17	2	1263.0	1230.0	-
401904.0	53.5	17	1	1574.0	-	-
563291.0	51.7	17	1	1478.0	-	-
59257.0	73.0	17	2	1978.0	1460.0	-
220250.0	68.7	17	2	1790.0	1227.0	-
381003.0	80.8	17	2	1410.0	1961.0	-
542588.0	67.9	17	2	1157.0	1339.0	-
39490.0	79.9	17	2	1240.0	1417.0	-

Type 5 Radar Waveform_3

Burst Offset (us)	Pulse Width (us)	Chirp Width (MHz)	Number of Pulses per Burst	PRI-1 (us)	PRI-2 (us)	PRI-3 (us)
240831.0	77.7	13	2	1255.0	1299.0	-
435079.0	55.3	13	1	1007.0	-	-
625610.0	88.3	13	3	1998.0	1764.0	1375.0
23625.0	50.6	13	1	1770.0	-	-
216541.0	91.9	13	3	1532.0	1169.0	1568.0
411186.0	63.2	13	1	1053.0	-	-
604887.0	59.4	13	1	1144.0	-	-
798571.0	59.0	13	1	1208.0	-	-
192922.0	94.7	13	3	1089.0	1454.0	1094.0
386685.0	70.8	13	2	1036.0	1323.0	-
580668.0	52.3	13	1	1630.0	-	-
772874.0	70.1	13	2	1592.0	1506.0	-
168843.0	99.2	13	3	1360.0	1855.0	1777.0
362874.0	79.3	13	2	1078.0	1242.0	-
554491.0	87.4	13	3	1771.0	1325.0	1869.0

Type 5 Radar Waveform_4

Burst Offset (us)	Pulse Width (us)	Chirp Width (MHz)	Number of Pulses per Burst	PRI-1 (us)	PRI-2 (us)	PRI-3 (us)
689101.0	72.0	17	2	1798.0	1250.0	-
156798.0	67.7	17	2	1130.0	1594.0	-
327870.0	50.4	17	1	1577.0	-	-
499087.0	56.2	17	1	1011.0	-	-
669631.0	64.4	17	1	1442.0	-	-
136119.0	56.6	17	1	1026.0	-	-
306693.0	56.4	17	1	1890.0	-	-
476277.0	75.6	17	2	1968.0	1626.0	-
648098.0	57.1	17	1	1972.0	-	-
114828.0	78.1	17	2	1462.0	1000.0	-
285654.0	62.6	17	1	1907.0	-	-
456602.0	56.0	17	1	1581.0	-	-
627483.0	64.0	17	1	1507.0	-	-
93932.0	64.9	17	1	1575.0	-	-
264058.0	73.9	17	2	1589.0	1823.0	-
434364.0	94.4	17	3	1379.0	1101.0	1038.0
605162.0	70.8	17	2	1677.0	1315.0	-

Type 5 Radar Waveform_5

Burst Offset (us)	Pulse Width (us)	Chirp Width (MHz)	Number of Pulses per Burst	PRI-1 (us)	PRI-2 (us)	PRI-3 (us)
112572.0	73.3	8	2	1265.0	1913.0	-
375949.0	88.9	8	3	1619.0	1624.0	1186.0
641372.0	66.0	8	1	1171.0	-	-
902892.0	85.9	8	3	1302.0	1414.0	1795.0
79971.0	94.1	8	3	1834.0	1671.0	1113.0
343704.0	73.7	8	2	1902.0	1852.0	-
607909.0	79.6	8	2	1544.0	1251.0	-
870507.0	87.0	8	3	1910.0	1077.0	1436.0
47640.0	62.7	8	1	1840.0	-	-
311272.0	81.4	8	2	1951.0	1642.0	-
574652.0	96.8	8	3	1148.0	1657.0	1409.0

Type 5 Radar Waveform_6

Burst Offset (us)	Pulse Width (us)	Chirp Width (MHz)	Number of Pulses per Burst	PRI-1 (us)	PRI-2 (us)	PRI-3 (us)
669184.0	62.8	15	1	1784.0	-	-
102286.0	78.7	15	2	1628.0	1236.0	-
283561.0	80.6	15	2	1210.0	1467.0	-
463707.0	97.7	15	3	1617.0	1773.0	1061.0
647435.0	62.8	15	1	1086.0	-	-
79774.0	83.5	15	3	1232.0	1870.0	1557.0
260761.0	93.7	15	3	1135.0	1191.0	1707.0
442351.0	72.7	15	2	1129.0	1774.0	-
623609.0	76.5	15	2	1825.0	1001.0	-
57523.0	93.9	15	3	1497.0	1696.0	1261.0
238857.0	77.9	15	2	1681.0	1158.0	-
418926.0	94.0	15	3	1819.0	1331.0	1720.0
600882.0	70.9	15	2	1387.0	1943.0	-
35317.0	69.2	15	2	1458.0	1585.0	-
217013.0	51.6	15	1	1196.0	-	-
397446.0	75.3	15	2	1438.0	1965.0	-

Type 5 Radar Waveform_7

Burst Offset (us)	Pulse Width (us)	Chirp Width (MHz)	Number of Pulses per Burst	PRI-1 (us)	PRI-2 (us)	PRI-3 (us)
688086.0	70.0	16	2	1712.0	1238.0	-
155870.0	62.1	16	1	1898.0	-	-
326628.0	61.1	16	1	1856.0	-	-
496267.0	82.1	16	2	1466.0	1960.0	-
665910.0	91.3	16	3	1202.0	1437.0	1551.0
134943.0	64.8	16	1	1354.0	-	-
305256.0	71.3	16	2	1234.0	1404.0	-
474542.0	88.9	16	3	1490.0	1295.0	1734.0
647700.0	57.9	16	1	1195.0	-	-
113478.0	99.7	16	3	1508.0	1198.0	1229.0
283291.0	97.3	16	3	1267.0	1936.0	1799.0
453181.0	96.5	16	3	1715.0	1866.0	1570.0
623630.0	85.3	16	3	1620.0	1669.0	1300.0
92828.0	62.9	16	1	1505.0	-	-
263076.0	74.0	16	2	1259.0	1812.0	-
432390.0	94.7	16	3	1793.0	1672.0	1453.0
603061.0	98.9	16	3	1384.0	1211.0	1550.0

Type 5 Radar Waveform_8

Burst Offset (us)	Pulse Width (us)	Chirp Width (MHz)	Number of Pulses per Burst	PRI-1 (us)	PRI-2 (us)	PRI-3 (us)
61029.0	55.8	20	1	1167.0	-	-
205606.0	69.8	20	2	1081.0	2000.0	-
351345.0	64.1	20	1	1432.0	-	-
495723.0	81.5	20	2	1083.0	1306.0	-
43116.0	61.7	20	1	1496.0	-	-
187827.0	79.2	20	2	1052.0	1858.0	-
333239.0	54.5	20	1	1835.0	-	-
476782.0	89.0	20	3	1139.0	1189.0	1421.0
25073.0	84.1	20	3	1969.0	1652.0	1740.0
169862.0	79.0	20	2	1864.0	1494.0	-
314424.0	78.8	20	2	1636.0	1991.0	-
459599.0	79.1	20	2	1248.0	1683.0	-
7345.0	70.1	20	2	1305.0	1049.0	-
152031.0	92.6	20	3	1098.0	1035.0	1249.0
295791.0	94.1	20	3	1427.0	1901.0	1942.0
440208.0	92.0	20	3	1881.0	2000.0	1150.0
585928.0	73.9	20	2	1641.0	1944.0	-
133916.0	98.2	20	3	1493.0	1816.0	1371.0
279736.0	59.0	20	1	1608.0	-	-
424654.0	63.0	20	1	1905.0	-	-

Type 5 Radar Waveform_9

Burst Offset (us)	Pulse Width (us)	Chirp Width (MHz)	Number of Pulses per Burst	PRI-1 (us)	PRI-2 (us)	PRI-3 (us)
710288.0	87.7	15	3	1726.0	1283.0	1314.0
145678.0	74.0	15	2	1498.0	1713.0	-
327698.0	59.5	15	1	1154.0	-	-
507919.0	70.0	15	2	1776.0	1433.0	-
688434.0	94.0	15	3	1231.0	1103.0	1531.0
123174.0	99.6	15	3	1355.0	1311.0	1721.0
304267.0	99.1	15	3	1151.0	1223.0	1380.0
484367.0	98.3	15	3	1854.0	1645.0	1621.0
667033.0	67.3	15	2	1370.0	1499.0	-
101181.0	70.7	15	2	1184.0	1125.0	-
282197.0	80.5	15	2	1341.0	1822.0	-
463533.0	73.1	15	2	1039.0	1794.0	-
643396.0	89.3	15	3	1895.0	1475.0	1025.0
78714.0	72.1	15	2	1850.0	1690.0	-
260520.0	64.0	15	1	1340.0	-	-
442213.0	51.4	15	1	1137.0	-	-

Radar Type 6 - Radar Statistical Performance	
Trail #	1=Detection 0=No Detection
0	1
1	1
2	1
3	1
4	1
5	1
6	1
7	1
8	1
9	1
Detection Percentage (%)	**100.0%**

Type 6 Radar Waveform_0

Frequency List (MHz)	0	1	2	3	4
0	5286	5526	5410	5461	5471
5	5413	5504	5561	5582	5364
10	5353	5274	5645	5362	5571
15	5417	5322	5284	5586	5486
20	5529	5709	5515	5696	5712
25	5351	5574	5659	5373	5488
30	5321	5560	5346	5414	5323
35	5347	5648	5345	5392	5326
40	5588	5546	5272	5652	5686
45	5290	5282	5556	5669	5514
50	5308	5430	5638	5363	5579
55	5639	5620	5587	5484	5409
60	5277	5724	5459	5601	5536
65	5549	5673	5498	5485	5591
70	5702	5714	5510	5623	5708
75	5687	5685	5260	5672	5319
80	5365	5715	5584	5527	5713
85	5647	5330	5657	5506	5452
90	5311	5683	5396	5337	5493
95	5497	5563	5431	5531	5270

Type 6 Radar Waveform_1

Frequency List (MHz)	0	1	2	3	4
0	5541	5290	5346	5622	5691
5	5552	5429	5636	5648	5571
10	5662	5538	5686	5557	5592
15	5573	5544	5425	5329	5303
20	5397	5598	5650	5604	5669
25	5600	5678	5302	5288	5407
30	5627	5307	5517	5561	5663
35	5618	5486	5264	5616	5545
40	5715	5524	5629	5685	5320
45	5683	5694	5262	5639	5252
50	5567	5670	5684	5339	5414
55	5668	5462	5564	5300	5438
60	5599	5474	5695	5588	5291
65	5702	5368	5375	5619	5321
70	5434	5534	5509	5313	5316
75	5690	5711	5631	5666	5388
80	5286	5565	5304	5348	5428
85	5494	5720	5406	5269	5311
90	5525	5293	5651	5266	5440
95	5569	5665	5543	5287	5386

Type 6 Radar Waveform_2

Frequency List (MHz)	0	1	2	3	4
0	5321	5529	5282	5308	5533
5	5594	5451	5711	5336	5303
10	5593	5424	5252	5655	5613
15	5661	5671	5528	5374	5495
20	5405	5289	5591	5596	5642
25	5391	5627	5408	5392	5441
30	5669	5474	5301	5340	5341
35	5625	5355	5509	5320	5251
40	5363	5712	5623	5560	5302
45	5717	5722	5688	5620	5460
50	5515	5465	5663	5411	5488
55	5314	5293	5569	5456	5269
60	5675	5298	5565	5522	5383
65	5566	5401	5389	5315	5286
70	5590	5635	5508	5429	5546
75	5459	5361	5684	5658	5403
80	5464	5689	5367	5256	5683
85	5519	5342	5514	5638	5352
90	5575	5402	5450	5652	5304
95	5506	5271	5423	5327	5695

Type 6 Radar Waveform_3

Frequency List (MHz)	0	1	2	3	4
0	5479	5293	5693	5469	5278
5	5636	5376	5311	5499	5607
10	5524	5688	5375	5634	5274
15	5323	5534	5419	5687	5413
20	5358	5629	5685	5615	5279
25	5611	5496	5475	5711	5560
30	5431	5516	5589	5667	5446
35	5305	5473	5640	5677	5417
40	5561	5325	5299	5455	5697
45	5330	5271	5673	5347	5436
50	5691	5468	5486	5355	5579
55	5346	5504	5587	5540	5371
60	5621	5689	5604	5599	5608
65	5723	5332	5602	5576	5671
70	5297	5461	5288	5318	5610
75	5566	5549	5628	5572	5527
80	5471	5465	5250	5400	5659
85	5592	5306	5316	5387	5296
90	5287	5361	5517	5678	5664
95	5418	5490	5644	5430	5515

Type 6 Radar Waveform_4

Frequency List (MHz)	0	1	2	3	4
0	5259	5629	5533	5595	5300
5	5398	5386	5662	5339	5358
10	5477	5334	5570	5655	5362
15	5450	5637	5367	5404	5324
20	5524	5677	5588	5545	5331
25	5600	5509	5375	5546	5388
30	5634	5266	5359	5576	5626
35	5554	5516	5500	5499	5565
40	5296	5384	5413	5329	5251
45	5612	5690	5392	5567	5557
50	5309	5292	5694	5511	5311
55	5436	5425	5281	5638	5563
60	5575	5274	5418	5459	5542
65	5508	5476	5273	5618	5488
70	5581	5343	5414	5531	5397
75	5379	5592	5623	5279	5495
80	5352	5347	5535	5656	5682
85	5684	5373	5298	5435	5551
90	5474	5284	5713	5572	5517
95	5468	5383	5717	5548	5400

Type 6 Radar Waveform_5

Frequency List (MHz)	0	1	2	3	4
0	5514	5393	5565	5694	5340
5	5342	5323	5461	5253	5546
10	5289	5266	5375	5290	5676
15	5353	5480	5265	5412	5596
20	5332	5593	5511	5291	5561
25	5433	5280	5542	5326	5543
30	5417	5435	5345	5374	5515
35	5654	5470	5250	5469	5401
40	5452	5583	5437	5708	5293
45	5691	5657	5496	5304	5499
50	5566	5568	5618	5646	5607
55	5621	5254	5409	5603	5482
60	5532	5476	5579	5268	5348
65	5500	5272	5705	5577	5358
70	5378	5702	5357	5421	5308
75	5518	5467	5445	5286	5489
80	5594	5599	5578	5394	5671
85	5495	5465	5339	5687	5695
90	5301	5379	5372	5690	5407
95	5474	5606	5555	5440	5641

Type 6 Radar Waveform_6

Frequency List (MHz)	0	1	2	3	4
0	5294	5632	5501	5380	5657
5	5384	5345	5536	5416	5375
10	5695	5530	5485	5697	5441
15	5607	5368	5457	5313	5340
20	5284	5549	5283	5534	5699
25	5270	5430	5577	5459	5324
30	5302	5589	5289	5377	5512
35	5341	5265	5554	5479	5291
40	5666	5473	5290	5620	5540
45	5579	5348	5260	5442	5269
50	5669	5468	5668	5683	5502
55	5422	5356	5661	5641	5621
60	5575	5649	5543	5570	5654
65	5613	5353	5628	5656	5299
70	5343	5424	5494	5426	5317
75	5332	5567	5517	5704	5267
80	5279	5391	5398	5404	5660
85	5352	5674	5537	5696	5344
90	5259	5419	5469	5539	5338
95	5264	5256	5658	5521	5507

Type 6 Radar Waveform_7

Frequency List (MHz)	0	1	2	3	4
0	5549	5396	5437	5541	5402
5	5426	5270	5611	5579	5582
10	5529	5416	5554	5583	5718
15	5259	5471	5502	5505	5251
20	5353	5490	5372	5507	5587
25	5556	5376	5534	5514	5598
30	5310	5329	5441	5672	5651
35	5432	5536	5707	5393	5605
40	5371	5313	5713	5384	5452
45	5520	5662	5406	5318	5445
50	5720	5446	5631	5412	5381
55	5637	5692	5716	5327	5315
60	5331	5566	5407	5475	5489
65	5296	5603	5552	5660	5459
70	5468	5524	5470	5385	5286
75	5548	5294	5339	5636	5334
80	5342	5291	5586	5398	5721
85	5265	5499	5528	5306	5397
90	5702	5324	5378	5616	5486
95	5523	5711	5367	5454	5278

Type 6 Radar Waveform_8

Frequency List (MHz)	0	1	2	3	4
0	5707	5635	5373	5702	5719
5	5565	5292	5686	5267	5314
10	5460	5680	5595	5303	5264
15	5617	5386	5477	5450	5319
20	5259	5519	5431	5364	5480
25	5475	5408	5579	5638	5548
30	5640	5674	5691	5447	5690
35	5492	5315	5523	5332	5385
40	5404	5444	5454	5629	5381
45	5500	5270	5464	5366	5441
50	5572	5621	5296	5535	5569
55	5494	5407	5438	5298	5496
60	5511	5336	5398	5435	5594
65	5552	5588	5395	5262	5540
70	5412	5527	5708	5349	5344
75	5633	5656	5521	5529	5449
80	5352	5417	5498	5405	5288
85	5306	5301	5660	5325	5493
90	5357	5692	5392	5330	5637
95	5600	5604	5706	5481	5470

Type 6 Radar Waveform_9

Frequency List (MHz)	0	1	2	3	4
0	5487	5399	5309	5388	5464
5	5607	5692	5286	5430	5521
10	5294	5469	5636	5498	5285
15	5608	5513	5580	5495	5511
20	5267	5685	5453	5266	5260
25	5307	5364	5582	5682	5563
30	5648	5662	5367	5690	5454
35	5711	5700	5635	5318	5283
40	5537	5567	5621	5378	5310
45	5480	5353	5425	5419	5328
50	5448	5322	5347	5624	5277
55	5678	5282	5597	5257	5269
60	5573	5661	5456	5643	5699
65	5381	5320	5501	5702	5443
70	5709	5398	5627	5557	5325
75	5303	5602	5301	5664	5510
80	5701	5462	5673	5468	5679
85	5502	5288	5311	5361	5253
90	5415	5336	5349	5649	5617
95	5351	5588	5604	5460	5375

Appendix B – Test Setup Photograph

Refer to “2311RSU031-UT” file.

Appendix C – EUT Photograph

Refer to “2311RSU031-UE” file.

The End