aruba
a Hewlett Packard Enterprise company

DATA SHEET

ARUBA 303 SERIES CAMPUS ACCESS POINTS

Low-cost 802.11ac Wave 2 enterprise AP

The affordable mid-range Aruba 303 Series campus access point delivers high performance 802.11ac with MU-MIMO (Wave 2) for medium density enterprise environments. With the integrated BLE and supporting 802.3af power, the Aruba 303 Series AP enables enterprises to improve their work efficiency and productivity with the lowest TCO.

The compact Aruba 303 Series AP delivers a maximum concurrent data rate of 867 Mbps in the 5GHz band and 300 Mbps in the 2.4GHz band (for an aggregate peak data rate of 1.2Gbps). Featuring 2x2:2SS, the Aruba 303 is designed for medium device density environments, such as schools, retail branches, warehouses, hotels and enterprise offices, where the environment is cost sensitive.

The 303 Series AP has an integrated Bluetooth Low-Energy (BLE) radio, which can be used as an Aruba beacon for advanced locationing, indoor wayfinding, asset tracking, and to enable proximity-based push notification services. The integrated beacon radio also enables the remote management of battery-powered and other standalone beacons in a large-scale network of Aruba beacons. It enables businesses to leverage mobility context to develop applications that will deliver an enhanced user experience and increase the value of the wireless network for organizations.

UNIQUE BENEFITS

- Unified AP – deploy with or without controller
  - The 303 Series access points can be deployed in either controller-based (ArubaOS) or controller-less (InstantOS) deployment mode
- Dual Radio 2x2 802.11ac access point with Multi-User MIMO (wave 2)
  - Supports up to 867Mbps in the 5GHz band (with 2SS/VHT80 client devices) and up to 300Mbps in the 2.4GHz band (with 2SS/HT40 clients)
- Built-in Bluetooth Low-Energy (BLE) radio
  - Enables location based services with BLE-enabled mobile devices receiving signals from multiple Aruba Beacons at the same time
  - Enables asset tracking when used with Aruba Asset Tags
- Advanced Cellular Coexistence (ACC)
  - Minimizes interference from 3G/4G cellular networks, distributed antenna systems and commercial small cell/femtocell equipment
- Quality of service for unified communications applications
  - Supports priority handling and policy enforcement for unified communication apps, including Skype for Business with encrypted videoconferencing, voice, chat and desktop sharing
- Aruba AppRF technology leverages deep packet inspection to classify and block, prioritize or limit bandwidth for over 2,500 enterprise apps or groups of apps
- RF Management
  - Adaptive Radio Management (ARM) technology with AirMatch automatically assigns channel, width and power settings based on environment and client density. It also provides airtime fairness and ensures that APs stay clear of all sources of RF interference to deliver reliable, high-performance WLANs
  - The Aruba 303 Series Access Points can be configured to provide part-time or dedicated air monitoring for spectrum analysis and wireless intrusion protection, VPN tunnels to extend remote locations to corporate resources, and wireless mesh connections where Ethernet drops are not available

- Spectrum analysis
  - Capable of part-time or dedicated air monitoring, the spectrum analyzer remotely scans the 2.4GHz and 5GHz radio bands to identify sources of RF interference from HT20 through VHT80 operation
- Aruba Secure Core
  - Device assurance: Use of Trusted Platform Module (TPM) for secure storage of credentials and keys as well as secure boot
  - Integrated wireless intrusion protection offers threat protection and mitigation, and eliminates the need for separate RF sensors and security appliances
  - IP reputation and security services identify, classify, and block malicious les, URLs and IPs, providing comprehensive protection against advanced online threats

Daisy-chain your wired network to connect and power any network device (IP camera, IOT gateway, or even a second Access Point) to the E1 Ethernet port of the AP-303P. Simplify and cost-reduce the installation of multiple devices by sharing switch ports and cabling.

CHOOSE YOUR OPERATING MODE

The Aruba 303 Series Access Points offer a choice of deployment and operating modes to meet your unique management and deployment requirements:

- The 303 Series AP is a unified AP that supports both controller-based and controller-less deployment modes, providing maximum flexibility.
- Controller-based mode – When deployed in conjunction with an Aruba Mobility Controller, Aruba 303 Series Access Points offer centralized configuration, data encryption, policy enforcement and network services, as well as distributed and centralized traffic forwarding.
- Controller-less (Instant) mode – The controller function is virtualized in a cluster of APs in Instant mode. As the network grows and/or requirements change, Instant deployments can easily migrate to controller-based mode.
- Remote AP (RAP) mode for branch deployments
- Air monitor (AM) for wireless IDS, rogue detection and containment
- Spectrum analyzer (SA), dedicated or hybrid, for identifying sources of RF interference
- Secure enterprise mesh portal or point

For large installations across multiple sites, the Aruba Activate service significantly reduces deployment time by automating device provisioning, firmware upgrades, and inventory management. With Aruba Activate, the APs can be factory-shipped to any site and configure themselves when powered up.

SPECIFICATIONS

Hardware Variants

- AP-303 models: single Ethernet
- AP-303P models: second Ethernet with PoE out

Wi-Fi Radio Specifications

- AP type: Indoor, dual radio, 5GHz 802.11ac 2x2 MIMO and 2.4GHz 802.11n 2x2 MIMO
- 5GHz (radio 0):
  - Two spatial stream Single User (SU) MIMO for up to 867 Mbps wireless data rate to individual 2SS VHT80 client devices
  - Two spatial stream Multi User (MU) MIMO for up to 867 Mbps wireless data rate to two 1SS MU-MIMO capable client devices simultaneously
- 2.4GHz (radio 1):
  - Two spatial stream Single User (SU) MIMO for up to 300 Mbps wireless data rate to individual 2SS HT40 client devices
- Support for up to 256 associated client devices per radio, and up to 16 BSSIDs per radio
- Supported frequency bands (country-specific restrictions apply):
  - 2.400 to 2.4835GHz
  - 5.150 to 5.250GHz
  - 5.250 to 5.350GHz
  - 5.470 to 5.725GHz
  - 5.725 to 5.850GHz
- Available channels: Dependent on configured regulatory domain
- Dynamic frequency selection (DFS) optimizes the use of available RF spectrum
- Supported radio technologies:
  - 802.11b: Direct-sequence spread-spectrum (DSSS)
  - 802.11a/g/n/ac: Orthogonal frequency-division multiplexing (OFDM)
- Supported modulation types:
  - 802.11b: BPSK, QPSK, CCK
  - 802.11a/g/n/ac: BPSK, QPSK, 16-QAM, 64-QAM, 256-QAM

- Transmit power: Configurable in increments of 0.5dBm
- Maximum (aggregate, conducted total) transmit power (limited by local regulatory requirements):
  - 2.4GHz band: +21dBm (18dBm per chain)
  - 5GHz band: +21dBm (18dBm per chain)
  - Note: conducted transmit power levels exclude antenna gain. For total (EIRP) transmit power, add antenna gain
- Advanced Cellular Coexistence (ACC) minimizes the impact of interference from cellular networks
- Maximum ratio combining (MRC) for improved receiver performance
- Cyclic delay/shift diversity (CDD/CSD) for improved downlink RF performance
- Short guard interval for 20MHz, 40MHz and 80MHz channels
- Space-time block coding (STBC) for increased range and improved reception
- Low-density parity check (LDPC) for high-efficiency error correction and increased throughput
- Transmit beam-forming (TxBF) for increased signal reliability and range
- Supported data rates (Mbps):
  - 802.11b: 1, 2, 5.5, 11
  - 802.11a/g: 6, 9, 12, 18, 24, 36, 48, 54
  - 802.11n: 6.5 to 300 (MCS0 to MCS15)
  - 802.11ac: 6.5 to 867 (MCS0 to MCS9, NSS = 1 to 2)
  - 802.11n high-throughput (HT) support: HT20/40
  - 802.11ac very high throughput (VHT) support: VHT20/40/80
  - 802.11n/ac packet aggregation: A-MPDU, A-MSDU

Wi-Fi Antennas

- AP-303: Internal antenna models.
  - Two vertically polarized dual-band downtilt omni-directional antennas for 2x2 MIMO with peak antenna gain of 3.3dBi (2.4GHz) and 5.9dBi (5GHz) per antenna.
  - The antennas are optimized for horizontal ceiling mounted orientation of the AP. The downtilt angle for maximum gain is roughly 30 degrees.
  - Combining the patterns of both antennas per radio, the peak gain of the average (effective) pattern is 2.1dBi in 2.4GHz and 4.6dBi in 5GHz.

Other Interfaces

- E0: One 10/100/1000BASE-T Ethernet network interface (RJ-45)
  - Auto-sensing link speed and MDI/MDX
  - 802.3az Energy Efficient Ethernet (EEE)
  - PoE-PD: 48Vdc (nominal) 802.3af PoE
- DC power interface
- E1 (AP-303P models only): One 10/100/1000BASE-T Ethernet network interface (RJ-45)
  - Auto-sensing link speed and MDI/MDX
  - 802.3az Energy Efficient Ethernet (EEE)
  - PoE-PSE (output): 48Vdc (nominal) 802.3af/at PoE
- Bluetooth Low Energy (BLE) radio
- Visual indicators (tri-color LEDs): for System and Radio status
  - Zigbee 802.15.4 radio (AP-303P models only)
- Reset button: factory reset (during device power-up), LED mode control (normal/off)
- Serial console interface (proprietary, µUSB physical jack)
- Kensington security slot

Power Sources and Consumption

- The AP supports direct DC power and Power over Ethernet (PoE)
- When both power sources are available, DC power takes priority over PoE
- Power sources are sold separately

AP-303 models:

- Direct DC source: 12Vdc nominal, +/- 5%
- DC power interface accepts 2.1/5.5-mm center-positive circular plug with 9.5-mm length
- Power over Ethernet (PoE): 48Vdc (nominal) 802.3af compliant source
- Maximum (worst-case) power consumption: 10.1W (PoE) or 8.8W (DC)
- Maximum (worst-case) power consumption in idle mode: 4.2W (PoE) or 4.0W (DC)

AP-303P models:

- Direct DC source: 48Vdc nominal, +/- 5%
- DC power interface accepts 1.35/3.5-mm center-positive circular plug with 9.5-mm length
- Power over Ethernet (PoE-PD) on E0: 48Vdc (nominal) 802.3af/at/bt compliant source
- PoE-PSE function on E1 disabled when powered by 802.3af PoE
- Maximum (worst-case) power consumption: 11.3 (PoE) or 11.5 (DC)
- Maximum (worst-case) power consumption in idle mode: 6.8 (PoE) or 7.0 (DC)
- Power consumption numbers exclude power to support PoE-PSE function on E1

Mounting

- The AP ships with a (black) mount clips to attach to a 9/16-inch or 15/16-inch flat T-bar drop-tile ceiling
- Several optional mount kits are available to attach the AP to a variety of surfaces; see the Ordering Information section below for details

Mechanical

- Dimensions and weight (unit, excluding mount accessories):
  - 150mm (W) x 150mm (D) x 35mm (H) or 5.9" (W) x 5.9" (D) x 1.4" (H)
  - AP-303 models: 260g or 9.2oz
  - AP-303P models: 280g or 9.9oz
- Dimensions and weight (shipping):
  - 190mm (W) x 180mm (D) x 60mm (H) or 7.4" (W) x 7.0" (D) x 2.4" (H)
  - AP-303 models: 410g or 14.5oz
  - AP-303P models: 430g or 15.2oz

Environmental

- Operating:
  - Temperature: 0° C to +40° C (+32° F to +104° F)
  - Humidity: 5% to 93% non-condensing
- Storage and transportation:
  - Temperature: -40° C to +70° C (-40° F to +158° F)

Reliability (at +25C operating temperature)

- AP-303 models MTBF: 795khrs (91yrs)
- AP-303P models MTBF: 518khrs (59yrs)

Regulatory

- FCC/ISED
- CE Marked
- RED Directive 2014/53/EU
- EMC Directive 2014/30/EU
- Low Voltage Directive 2014/35/EU
- UL/IEC/EN 60950
- EN 60601-1-1 and EN 60601-1-2

For more country-specific regulatory information and approvals, please see your Aruba representative.

Regulatory Model Numbers

- AP-303: APIN0303
- AP-303P: APINP303

Certifications

- CB Scheme Safety, cTUVus
- UL2043 plenum rating
- Wi-Fi Alliance (WFA) certified 802.11a/b/g/n/ac
- Wi-Fi Alliance certified (WFA) 802.11ac with Wave 2 features
- Passpoint® (Release 2) with ArubaOS and Instant 8.3+

WARRANTY

- Aruba limited lifetime warranty

MINIMUM SOFTWARE VERSIONS

- AP-303 models: ArubaOS & Aruba InstantOS 8.3.0.0
- AP-303P models: ArubaOS & Aruba InstantOS 8.4.0.0

RF PERFORMANCE TABLE		
	Maximum transmit power (dBm) per transmit chain	**Receiver sensitivity (dBm) per receive chain**
802.11b 2.4GHz		
1 Mbps	18.0	-93.0
11 Mbps	18.0	-87.0
802.11g 2.4GHz		
6 Mbps	18.0	-90.0
54 Mbps	16.0	-73.0
802.11n HT20 2.4GHz		
MCS0/8	18.0	-90.0
MCS7/15	14.0	-71.0
802.11n HT40 2.4GHz		
MCS0/8	18.0	-87.0
MCS7/15	14.0	-68.0
802.11a 5GHz		
6 Mbps	18.0	-90.0
54 Mbps	16.0	-73.0
802.11n HT20 5GHz		
MCS0/8	18.0	-90.0
MCS7/15	14.0	-71.0
802.11n HT40 5GHz		
MCS0/8	18.0	-87.0
MCS7/15	14.0	-68.0
802.11ac VHT20 5GHz		
MCS0	18.0	-90.0
MCS9	12.0	-67.0
802.11ac VHT40 5GHz		
MCS0	18.0	-87.0
MCS9	12.0	-62.0
802.11ac VHT80 5GHz		
MCS0	18.0	-84.0
MCS9	12.0	-59.0

Note: Table shows the maximum hardware capability of the AP (excluding antenna and MIMO/MRC gain). Actual maximum transmit power may be limited below these numbers to ensure compliance with local regulatory requirements.

ANTENNA PATTERN PLOTS

Horizontal planes (top view, AP facing forward)

Showing both azimuth (0 degrees) and 30 degrees downtilt patterns

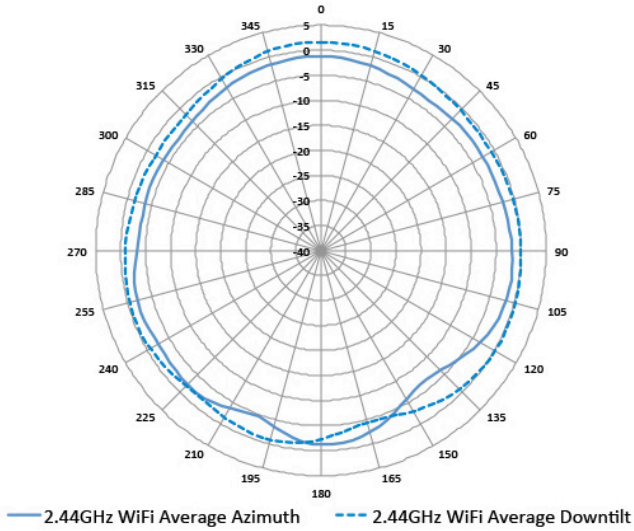

2.44GHz Wi-Fi (radio 1)

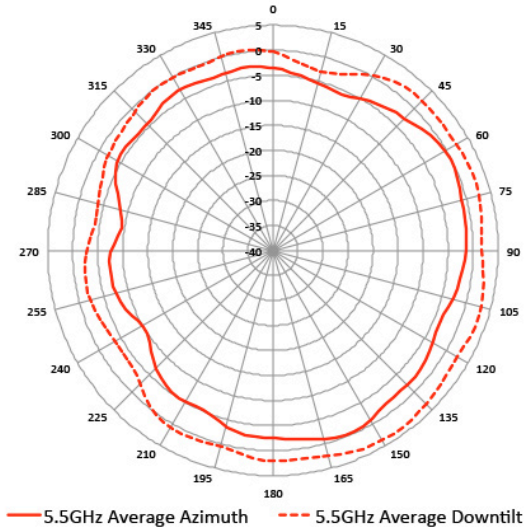

5.5GHz Wi-Fi (radio 0)

Elevation planes (side view, AP facing down)

Showing side view with AP rotated 0 and 90 degrees

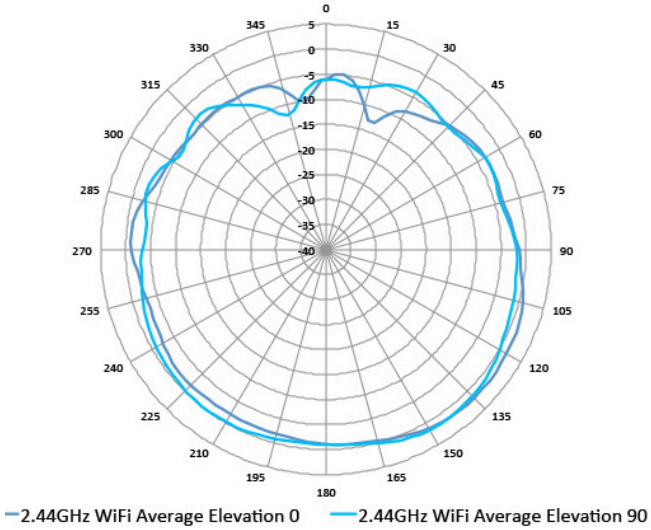

2.44GHz Wi-Fi (radio 1)

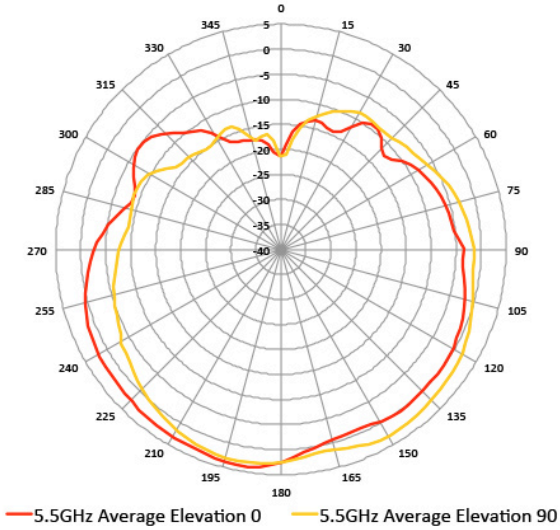

5.5GHz Wi-Fi (radio 0)

ORDERING INFORMATION

Part Number	Description
Aruba 303 Series Campus Access Points	
JZ317A	Aruba AP-303 (EG) Dual 2x2:2 MU-MIMO Radio Internal Antennas Unified Campus AP
JZ318A	Aruba AP-303 (IL) Dual 2x2:2 MU-MIMO Radio Internal Antennas Unified Campus AP
JZ319A	Aruba AP-303 (JP) Dual 2x2:2 MU-MIMO Radio Internal Antennas Unified Campus AP
JZ320A	Aruba AP-303 (RW) Dual 2x2:2 MU-MIMO Radio Internal Antennas Unified Campus AP
JZ321A	Aruba AP-303 (US) Dual 2x2:2 MU-MIMO Radio Internal Antennas Unified Campus AP
Aruba 303P Series Campus Access Points	
R0G65A	Aruba AP-303P (EG) Dual 2x2:2 MU-MIMO Radio Internal Antennas Unified Campus AP Dual Ethernet
R0G66A	Aruba AP-303P (IL) Dual 2x2:2 MU-MIMO Radio Internal Antennas Unified Campus AP Dual Ethernet
R0G67A	Aruba AP-303P (JP) Dual 2x2:2 MU-MIMO Radio Internal Antennas Unified Campus AP Dual Ethernet
R0G68A	Aruba AP-303P (RW) Dual 2x2:2 MU-MIMO Radio Internal Antennas Unified Campus AP Dual Ethernet
R0G69A	Aruba AP-303P (US) Dual 2x2:2 MU-MIMO Radio Internal Antennas Unified Campus AP Dual Ethernet
Mount Kits – Spares	
JW044A	AP-220-MNT-C1 2x Ceiling Grid Rail Adapter for Basic Flat Rails Mount Kit
Mount Kits – Accessories	
JW045A	AP-220-MNT-C2 Kit with two suspended ceiling grid rail adapters for Interlude and Silhouette style rails
JX961A	AP-MNT-CM1 Industrial grade indoor Access Point metal suspended ceiling rail mount kit
JW046A	AP-220-MNT-W1 Flat surface wall/ceiling basic flat surface AP mount kit (black)
JW047A	AP-220-MNT-W1W Flat surface wall/ceiling basic flat surface AP mount kit (white)
JY705A	AP-200-MNT-W3 Low profile box style secure small flat surface AP mount kit (white)
Q9U25A	AP-MNT-W4 White Low Profile Basic AP Flat Surface Mount Kit
Cosmetic Covers	
JZ327A	AP-303-CVR-20 20-pack for AP-303 with Holes for LED Indicators White Non-glossy Snap-on Covers
Power Accessories (AP-303 models)	
JW627A	PD-3501G-AC 15.4W 802.3af PoE 10/100/1000Base-T Ethernet Midspan Injector
JX990A	AP-AC-12V30B 12V/30W AC/DC Desktop Style 2.1/5.5/9.5mm Circular 90 Deg Plug DoE Level VI Adapter
Power Accessories (AP-303P models)	
JW629A	PD-9001GR-AC 30W 802.3at PoE+ 10/100/1000 Ethernet Indoor Rated Midspan Injector
JX991A	AP-AC-48V36C 48V/36W AC/DC Desktop Style 1.35/3.5/9.5mm Circular 90 Deg Plug Adapter
Other Accessories	
JY728A	AP-CBL-SERU Micro-USB TTL3.3V to USB2.0 AP Console Adapter Cable

a Hewlett Packard Enterprise company

www.arubanetworks.com

3333 SCOTT BLVD | SANTA CLARA, CA 95054
1.844.473.2782 | T: 1.408.227.4500 | FAX: 1.408.227.4550 | INFO@ARUBANETWORKS.COM

© Copyright 2018 Hewlett Packard Enterprise Development LP. The information contained herein is subject to change without notice. The only warranties for Hewlett Packard Enterprise products and services are set forth in the express warranty statements accompanying such products and services. Nothing herein should be construed as constituting an additional warranty. Hewlett Packard Enterprise shall not be liable for technical or editorial errors or omissions contained herein. DS_AP303Series_082918

Aruba 303P Series Campus Access Points

Installation Guide

The Aruba 303P Series campus access points support IEEE802.11ac Wave 2, delivering high performance with the MU-MIMO (Multi-User Multiple-Input, Multiple-Output) technology, while also supporting 802.11a/b/g /n wireless services. The 303P Series access points can be deployed in either a controller-based (ArubaOS) or controller-less (InstantOS) deployment mode.

The 303P Series access points provide the following capabilities:

- IEEE 802.11a/b/g/n/ac operation as a wireless access point
- IEEE 802.11a/b/g/n/ac operation as a wireless air monitor
- Compatibility with IEEE 802.3af PoE
- Integrated Bluetooth Low Energy (BLE) radio

Package Contents

- 303P Series Access Point
- 9/16” and 15/16” combined ceiling mount adapter (Spare: AP-220-MNT-C1)
- Startup guide

NOTE

Inform your supplier if there are any incorrect, missing, or damaged parts. If possible, retain the carton, including the original packing materials. Use these materials to repack and return the unit to the supplier if needed.

Hardware Overview

The following sections outline the hardware components of the 303P Series access points.

Figure 1 *303P Series (front view)*

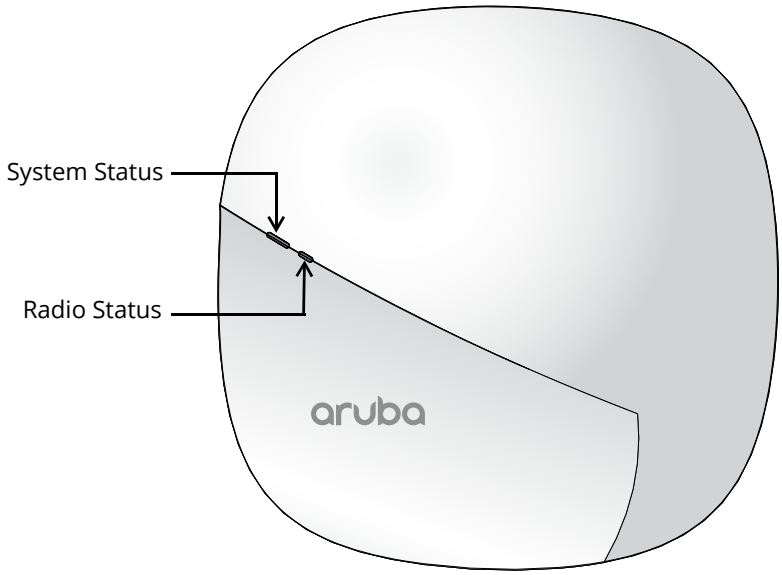

LED

The 303P Series access points have two LEDs that indicate the system and radio status of the device. These two LEDs can be configured via ArubaOS or Aruba Instant software into three separate modes:

- Normal mode (by default): See Table 1
- Both LEDs off
- Blink mode: Both LEDs blink green (synchronized)

Table 1 *303P Series Access Point LEDs Status in Normal Mode*

LED	Color/State	Meaning
System Status	Off	Device powered off
	Green- Blinking[1]	Device booting, not ready for use
	Green- Solid	Device ready for use, no restrictions
	Green- Flashing[2]	Device ready for use, uplink negotiated in sub optimal speed (<1Gbps)
	Red- Solid	System error condition - immediate action required
Radio Status	Off	Device powered off, or both radios disabled
	Green- Solid	Both radios enabled in access mode
	Green- Blinking	One radio enabled in access mode, other disabled
	Amber- Solid	Both radios enabled in monitor mode
	Amber- Blinking	One radio enabled in monitor mode, other disabled
	Alternating[3]	• Green: one radio in access mode • Amber: one radio in monitor mode

1 blinking: one second on, one second off, 2 seconds cycle
2 flashing: mostly on, fraction of a second off, 2 second cycle
3 alternating: one second each color, 2 second cycle

Figure 2 *303P Series (rear view)*

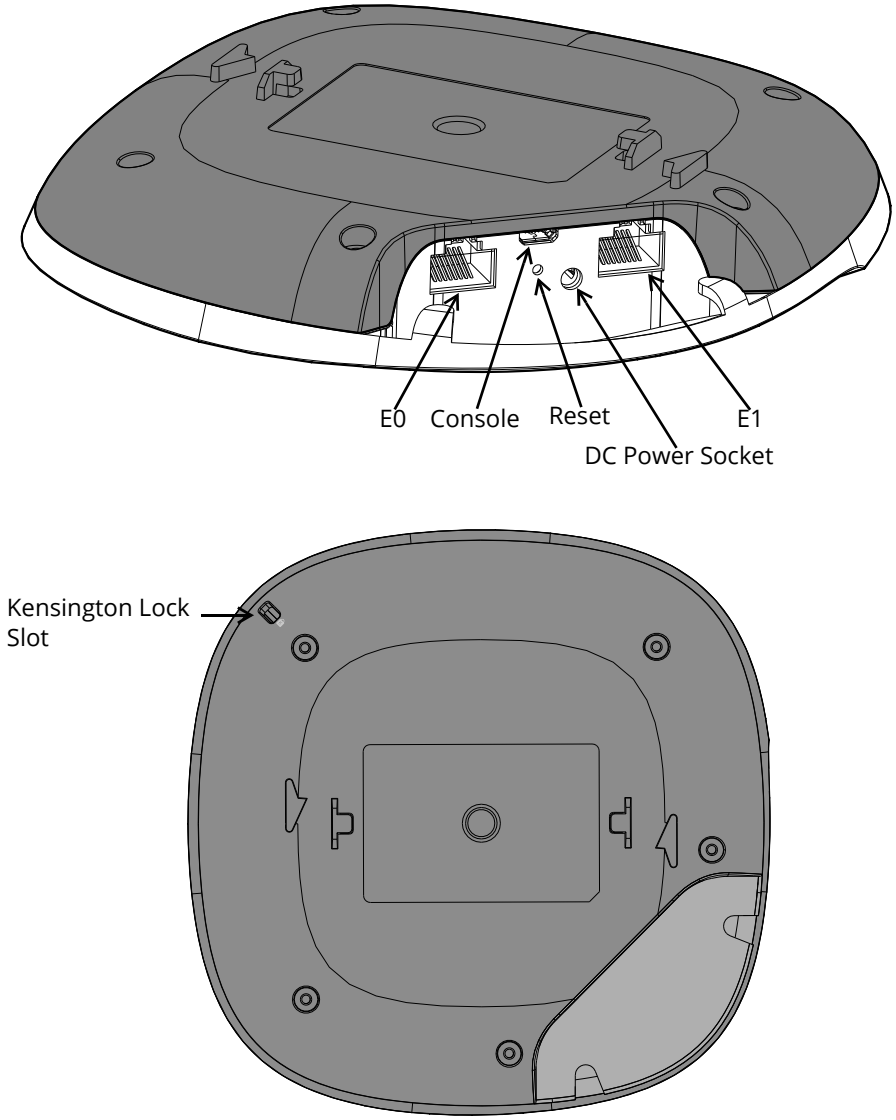

Ethernet Ports

The 303P Series access point is equipped with two 100/1000Base-T auto-sensing MDI/MDX Ethernet ports (E0 and E1) for wired network connectivity, shown in Figure 2.

The E0 port supports PoE-in (PoE-PD) functionality, allowing the 303P Series access point to be powered from an 802.3af/802.3at/802.3bt compliant PoE power supply.

The E1port supports PoE-out (PoE-PSE) functionality, capable of supplying PoE power to an external device that is physically connected to the E1 port by Ethernet cable.

If the 303P Series access point is connected to both DC and PoE sources simultaneously, the device will draw power from the DC source, while continuing to draw a minimal current from the PoE source. In the event that the DC power source fails, the access point will switch to the PoE source.

NOTE

For seamless failover from DC to PoE power source, the E0 port should be powered on from a PoE power source before the DC power adapter is plugged on.

The table below indicates the E1 port's PSE output when the 303P Series access point is connected to DC or PoE power supply.

Table 2 *AP-303P Power Supply Matrix*

Power Input on DC Jack or E0 PD Port	Power Output on E1 PSE Port	Note
48VDC	PoE 802.3at	DC adapter supply power only. PSE output is up to 30W.
48VDC + PoE	PoE 802.3at	If DC adapter and PoE (802.3af/at/bt) supply power simultaneously, the AP-303P will draw power from the DC power supply. The PSE output is up to 30W.
PoE 802.3af	Disabled	802.3af PoE power supply only. PSE output is disabled.
PoE 802.3at	PoE 802.3af	802.3at PoE power supply only. PSE output is up to 15.4W.
PoE 802.3bt	PoE 802.3at	802.3bt PoE power supply only. PSE output is up to 30W.

NOTE

The PoE-out (PoE-PSE) functionality can be disabled (by default) or enabled on E1 port via ArubaOS or Aruba Instant software.

Power

If PoE is not available, a proprietary Aruba AP-AC-48V36C power adapter kit (sold separately) can be used to power the 303P Series access point.

Additionally, a locally-sourced AC-to-DC adapter (or any DC source) can be used to power this device, as long as it complies with all applicable local regulatory requirements and the DC interface meets the following specifications:

- 48 Vdc (+/- 5%)
- 1.35/3.5 mm center-positive circular plug, 9.5 mm length

Console Port

The console port is a Micro-B connector located on the back of this device. A proprietary serial adapter cable (AP-CBL-SERU) is needed to use this interface. It is sold separately to connect the AP to a serial terminal or a laptop for direct local management.

Reset Button

To reset the 303P Series access points to factory default settings, press and hold down the reset button using a small, narrow object such as a paper clip for several seconds while powering up the AP, or for more than 10 seconds during normal operation.

To turn off/on all the LED display, press and release the reset button using a small, narrow object, such as a paperclip for less than 10 seconds during normal operation of the access point.

Kensington Lock Slot

The 303P Series access points are equipped with a Kensington lock slot for additional security.

Before You Begin

Refer to the sections below before beginning the installation process.

CAUTION

FCC Statement: Improper termination of access points installed in the United States configured to non-US model controllers will be in violation of the FCC grant of equipment authorization. Any such willful or intentional violation may result in a requirement by the FCC for immediate termination of operation and may be subject to forfeiture (47 CFR 1.80).

CAUTION

EU Statement:
Lower power radio LAN product operating in 2.4 GHz and 5 GHz bands. Please refer to the *ArubaOS/Instant User Guide* for details on restrictions.

Produit réseau local radio basse puissance operant dans la bande fréquence 2.4 GHz et 5 GHz. Merci de vous referrer au *ArubaOS/Instant User Guide* pour les details des restrictions.

Low Power FunkLAN Produkt, das im 2.4 GHz und im 5 GHz Band arbeitet. Weitere Informationen bezlüglich Einschränkungen finden Sie im *ArubaOS/Instant User Guide.*

Apparati Radio LAN a bassa Potenza, operanti a 2.4 GHz e 5 GHz. Fare riferimento alla *ArubaOS/Instant User Guide* per avere informazioni detagliate sulle restrizioni.

Pre-Installation Checklist

Before installing the 303P Series access point, be sure that you have the following:

- Cat5E or better UTP cable
- One of the following power sources:
  - IEEE 802.3af/802.3at/802.3bt-compliant Power over Ethernet (PoE) source
  - Aruba AP-AC-48V36C adapter kit (sold separately)

For 303P Series access point running ArubaOS only:

- Aruba controller provisioned on the network
- Layer 2/3 network connectivity to your access point
- One of the following network services:
  - Aruba Discovery Protocol (ADP)
  - DNS server with an “A” record
  - DHCP Server with vendor specific options

NOTE

Aruba Networks, Inc., in compliance with governmental requirements, has designed this device so that only authorized network administrators can change the settings. For more information about access point configuration, refer to the *ArubaOS Quick Start Guide and ArubaOS User Guide*.

CAUTION

Access points are radio transmission devices and as such are subject to government regulations of the host country. The network administrator(s) is/are responsible for ensuring that configuration and operation of this equipment is in compliance with their country’s regulations. For a complete list of approved channels in your country, refer to the *Aruba Downloadable Regulatory Table* at www.arubanetworks.com.

Verifying Pre-Installation Connectivity

NOTE

The instructions in this section are applicable to the 303P Series access points running ArubaOS only.

Before you install access points in a network environment, make sure that the access points will be able to locate and connect to the controller when they are powered on. Specifically, you must verify the following conditions:

- When connected to the network, each access point is assigned a valid IP address.
- Access points are able to locate the controller.

Refer to the *ArubaOS Quick Start Guide* for instructions on locating and connecting to the controller.

Identifying Specific Installation Locations

Use the access point placement map generated by Aruba's RF Plan software application to determine the proper installation location(s). Each location should be as close as possible to the center of the intended coverage area and should be free from obstructions or obvious sources of interference. These RF absorbers/reflectors/interference sources will impact RF propagation and should be accounted for during the planning phase and adjusted for in RF plan.

Identifying Known RF Absorbers/Reflectors/Interference Sources

Identifying known RF absorbers, reflectors, and interference sources while in the field during the installation phase is critical. Make sure that these sources are taken into consideration when you attach an access point to its fixed location.

RF absorbers include:

- Cement/concrete—Old concrete has high levels of water dissipation, which dries out the concrete, allowing for potential RF propagation. New concrete has high levels of water concentration in the concrete, blocking RF signals.
- Natural Items—Fish tanks, water fountains, ponds, and trees
- Brick

RF reflectors include:

- Metal Objects—Metal pans between floors, rebar, fire doors, air conditioning/heating ducts, mesh windows, blinds, chain link fences (depending on aperture size), refrigerators, racks, shelves, and filing cabinets.
- Do not place an access point between two air conditioning/heating ducts. Make sure that access points are placed below ducts to avoid RF disturbances.

RF interference sources include:

- Microwave ovens and other 2.4 or 5 GHz objects (such as cordless phones)
- Cordless headset such as those used in call centers or lunch rooms

Installing the Access Point

The access point ships with a ceiling mount adapter to attach to a 9/16" or 15/16" ceiling rail. Additional ceiling or wall mount kits are sold separately as accessories.

NOTE

Service to all Aruba products should be performed by trained service personnel only.

CAUTION

The installer is responsible for securing the access point onto the ceiling tile rail in accordance with the steps below. Failure to properly install this product may result in physical injury and/or damage to property.

1. Pull the necessary cables through a prepared hole in the ceiling tile near where the access point will be placed.
2. Place the mount adapter against the back of the access point with the mount adapter at an angle of approximately 30 degrees to the tabs (see Figure 3).
   - Twist the mount adapter clockwise until it snaps into place in the tabs (see Figure 3).

Figure 3 *Attaching the Ceiling Mount Adapter to the AP*

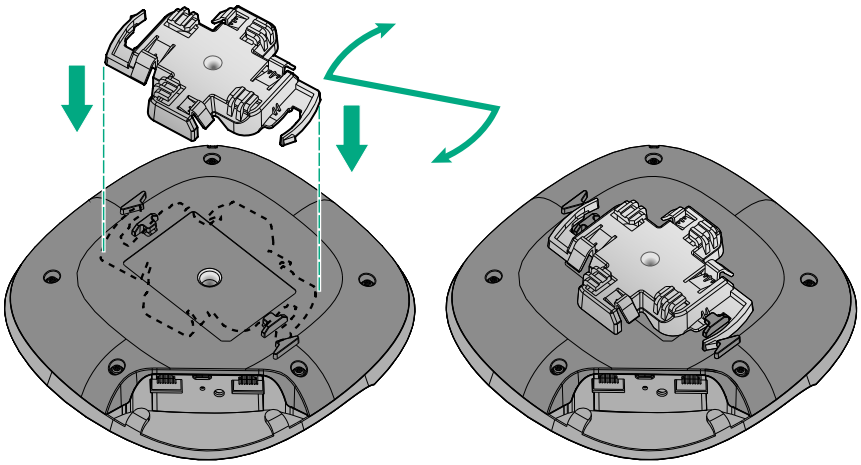

3. Hold the access point next to the ceiling tile rail with the ceiling tile rail mounting slots at approximately a 30-degree angle to the ceiling tile rail (see Figure 4). Make sure that any cable slack is above the ceiling tile.
4. Pushing toward the ceiling tile, rotate the access point clockwise until the device clicks into place on the ceiling tile rail.

Figure 4 *Mounting the Access Point* to a 15/16" ceiling rail

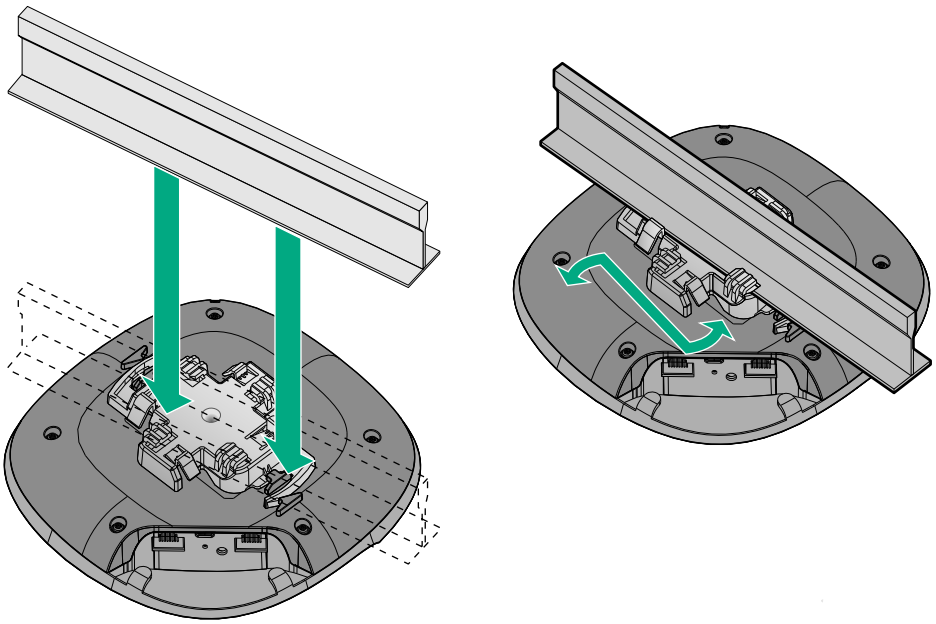

Figure 5 *Mounting the Access Point* to a 9/16" ceiling rail

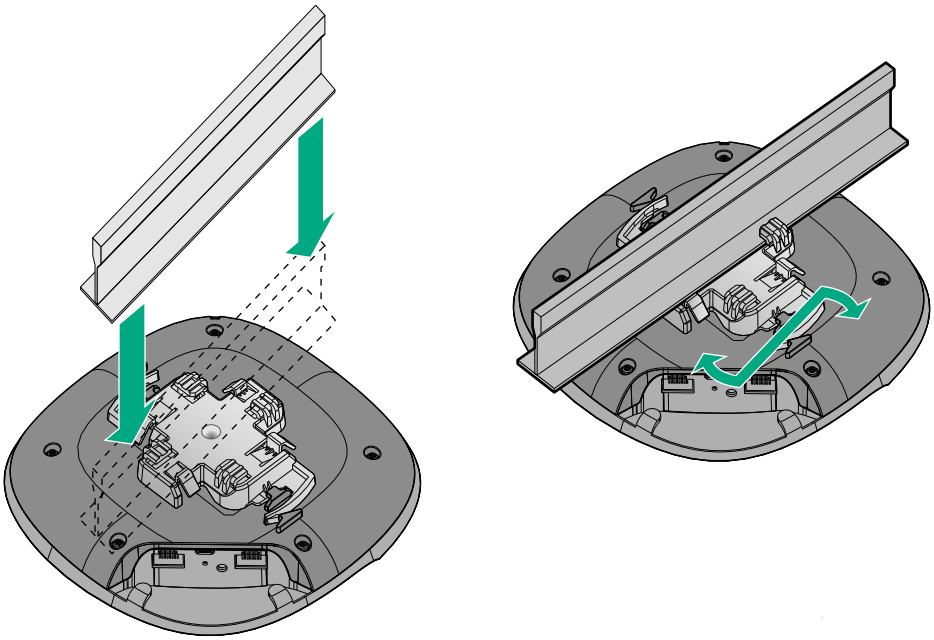

Verifying Post-Installation Connectivity

The integrated LED on the access point can be used to verify that the access point access point is receiving power and initializing successfully (see Table 1). Refer to the *ArubaOS Quick Start Guide* for further details on verifying post-installation network connectivity.

Electrical and Environmental Specifications

For additional specifications on this product, please refer to the product data sheet at www.arubanetworks.com.

Electrical

- Ethernet:
  - 2 x 100/1000 Base-T auto-sensing Ethernet interface (RJ-45)

- Power:
  - Direct DC source: 48Vdc nominal, +/- 5%
  - Power over Ethernet (PoE): 802.3af/802.3at/802.3bt compliant source
  - Connect only to IEC 60950-1 or IEC 60601-1 products and power sources.

NOTE

If a power adapter other than the Aruba-approved adapter is used in the US or Canada, it should be NRTL listed, with an output rated 48Vdc, minimum 1A, marked “LPS” and “Class 2”, and suitable for plugging into a standard power receptacle in the US and Canada.

Environmental

- Operating:
  - Temperature: 0°C to +40°C (+32°F to +104°F)
  - Humidity: 5% to 93% non-condensing
- Storage and transport
  - Temperature: -40°C to +70°C (-40°F to +158°F)

CAUTION

The Aruba 303P Series access points are for indoor use only. The access point, AC adapter, and all connected cables are not designed for outdoor use.

Regulatory Information

The following regulatory model names apply to the 303P Series access points:

- AP-303P: APINP303

FCC

To view the FCC ID for controller-managed access points:

1. Log into the controller WebUI
2. Navigate to Maintenance > Controller > About

To view the FCC ID for Instant access points:

1. Log into the virtual controller WebUI
2. Navigate to Maintenance > About

CAUTION

RF Radiation Exposure Statement: This equipment complies with RF radiation exposure limits. This equipment should be installed and operated with a minimum distance of 13.78 inches (35cm) between the radiator and your body for 2.4 GHz and 5 GHz operations. This transmitter must not be co-located or operating in conjunction with any other antenna or transmitter.

CAUTION

Déclaration de la concernant l’exposition aux rayonnements à fréquence radioélectrique (FR): Cet appareil est conforme aux limites d’exposition aux rayonnements FR établies par la FCC. Il doit être installé et utilisé à une distance minimale de 35 cm (13,78 pouces) entre le radiateur et votre corps, qu’il opère sur la bande 2,4 GHz ou 5 GHz. Cet émetteur ne doit pas être installé ou utilisé à proximité immédiate d’une autre antenne ni d’un autre transmetteur.

CAUTION

Changes or modifications to this unit not expressly approved by the party responsible for compliance could void the user’s authority to operate this equipment.

CAUTION

Toute modification effectuée sur cet équipement sans l'autorisation expresse de la partie responsable de la conformité est susceptible d'annuler son droit d'utilisation.

Federal Communication Commission

This device complies with Part 15 of the FCC Rules. Operation is subject to the following two conditions: (1)this device may not cause harmful interference, and (2) this device must accept any interference received, including interference that may cause undesired operation.
This equipment has been tested and found to comply with the limits for a Class B digital device, pursuant to Part 15 of the FCC Rules. These limits are designed to provide reasonable protection against harmful interference in a residential installation. This equipment generates, uses and can radiate radio frequency energy and, if not installed and used in accordance with the manufacturer's instructions, may cause harmful interference to radio communications. However, there is no guarantee that interference will not occur in a particular installation. If this equipment does cause harmful interference to radio or television reception, which can be determined by turning the equipment off and on, the user is encouraged to try to correct the interference by one or more of the following measures:

- Reorient or relocate the receiving antenna.
- Increase the separation between the equipment and receiver.
- Connect the equipment to an outlet on a circuit different from that to which the receiver is connected.
- Consult the dealer or an experienced radio or TV technician for help.

Industry Canada

This Class B digital apparatus meets all of the requirements of the Canadian Interference-Causing Equipment Regulations.
In accordance with Industry Canada regulations, this radio transmitter and receiver may only be used with an antenna, the maximum type and gain of which must be approved by Industry Canada. To reduce potential radio interference, the type of antenna and its gain shall be chosen so that the equivalent isotropic radiated power (EIRP) does not exceed the values necessary for effective communication.
This device complies with Industry Canada's license-exempt RSS regulations. Operation of this device is subject to the following two conditions: (1) this device may not cause interference, and (2) this device must accept any interference, including interference that may cause undesired operation.
When operated in the 5.15 to 5.25 GHz frequency range, this device is restricted to indoor use to reduce the potential for harmful interference with co-channel Mobile Satellite Systems.

Déclaration d'Industrie Canada

Conformément aux réglementations d'Industrie Canada, cet émetteur-récepteur radio doit être utilisé uniquement avec une antenne dont le type et le gain maximal doivent être approuvés par Industrie Canada. Pour réduire les interférences radio potentielles, le type d'antenne et son gain doivent être choisis de façon à ce que la puissance isotrope rayonnée équivalente (PIRE) ne dépasse pas les valeurs nécessaires à une communication efficace.
Ce périphérique est conforme aux règlements RSS exempts de licence d'Industrie Canada. L'utilisation de ce périphérique est soumise aux deux conditions suivantes : (1) ce périphérique ne doit pas provoquer d'interférences, et (2) ce périphérique doit accepter toute interférence, y compris les interférences susceptibles de provoquer un dysfonctionnement.
En cas d'utilisation dans la plage de fréquences de 5,15 à 5,25 GHz, cet appareil doit uniquement être utilisé en intérieur afin de réduire les risques d'interférence avec les systèmes satellites mobiles partageant le même canal.

EU Regulatory Conformance

The Declaration of Conformity made under Radio Equipment Directive 2014/53/EU is available for viewing at: www.hpe.com/eu/certificates. Select the document that corresponds to your device's model number as it is indicated on the product label.

Wireless Channel Restrictions

5150-5350MHz band is limited to indoor only in the following countries; Austria (AT), Belgium (BE), Bulgaria (BG), Croatia (HR), Cyprus (CY), Czech Republic (CZ), Denmark (DK), Estonia (EE), Finland (FI), France (FR), Germany (DE), Greece (GR), Hungary (HU), Iceland (IS), Ireland (IE), Italy (IT), Latvia (LV), Liechtenstein (LI), Lithuania (LT), Luxembourg (LU), Malta (MT), Netherlands (NL), Norway (NO), Poland (PL), Portugal (PT), Romania (RO), Slovakia (SK), Slovenia (SL), Spain (ES), Sweden (SE), Switzerland (CH), Turkey (TR), United Kingdom (UK).

Frequency Range MHz	Max EIRP
2402-2480	9 dbm

Frequency Range MHz	Max EIRP
2412-2472	20 dbm
5150-5250	23 dbm
5250-5350	23 dbm
5470-5725	30 dbm
5725-5850	N/A for EU

CAUTION

Lower power radio LAN product operating in 2.4 GHz and 5 GHz bands. Please refer to the ArubaOS User Guide/ Instant User Guide for details on restrictions.

Medical

1. Equipment not suitable for use in the presence of flammable mixtures.
2. Connect to only IEC 60950-1 or IEC 60601-1 certified products and power sources. The end user is responsible for the resulting medical system complies with the requirements of IEC 60601-1.
3. Wipe with a dry cloth, no additional maintenance required.
4. No serviceable parts, the unit must be sent back to the manufacturer for repair.
5. No modifications are allowed without Aruba approval.

NOTE

This device is intended for indoor use, in hallways, breakrooms, office areas of professional medical facilities. This device should not be installed in rooms housing patients.

NOTE

This device has no IEC/EN60601-1-2 essential performance.

CAUTION

Use of this equipment adjacent to or stacked with other equipment should be avoided because it could result in improper operation. If such use is necessary, this equipment and the other equipment should be observed to verify that they are operating normally.

NOTE

Compliance is based on the use of Aruba approved accessories. Refer to the ordering guide for this access point at http://www.arubanetworks.com/assets/og/OG_AP-510Series.pdf.

CAUTION

Use of accessories, transducers and cables other than those specified or provided by the manufacturer of this equipment could result in increased electromagnetic emissions or decreased electromagnetic immunity of this equipment and result in improper operation.

CAUTION

Portable RF communications equipment (including peripherals such as antenna cables and external antennas) should be used no closer than 30 cm (12 inches) to any part of the access point. Otherwise, degradation of the performance of this equipment could result.

Brazil

Este equipamento não tem direito à proteção contra interferência prejudicial e não pode causar interferência em sistemas devidamente autorizados.

Japan

ご使用になっている装置に VCCI マークが付いていましたら、次の説明文を
お読み下さい。

この装置は、クラス B 情報技術装置です。この装置は、家庭環境で使用すること
を目的としていますが、この装置がラジオやテレビジョン受信機に近接して
使用されると、受信障害を引き起こすことがあります。取扱説明書に従って
正しい取り扱いをして下さい。

VCCI-B

México

La operación de este equipo está sujeta a las siguientes dos condiciones: (1) es posible que este equipo o dispositivo no cause interferencia perjudicial y (2) este equipo o dispositivo debeaceptar cualquier interferencia, incluyendo la que pueda causar su operación no deseada.

Morocco

Нормативные требования Евразийского Экономического Союза

HPE Russia: ООО "Хьюлетт Паккард Энтерпрайз" Российская Федерация, 125171, г. Москва, Ленинградское шоссе, 16А, стр.3, Телефон: +7 499 403 4248 Факс: +7 499 403 4677

'HPE Belarus': ИООО «Хьюлетт-Паккард Бел», Республика Беларусь, 220030, г. Минск, ул. Интернациональная, 36-1, Телефон/факс: +375 17 392 28 20

'HPE Kazakhstan': ТОО «Хьюлетт-Паккард (К)», Республика Казахстан, 050040, г. Алматы, Бостандыкский район, проспект Аль-Фараби, 77/7, Телефон/факс: + 7 727 355 35 50

Kazakhstan

ЖШС "Хьюлетт Паккард Энтерпрайз" Ресей Федерациясы, 125171, Мәскеу, Ленинград тас жолы, 16А блок 3, Телефон: +7 499 403 4248 Факс: +7 499 403 4677

«HEWLETT-PACKARD Bel» ЖШС, Беларусь Республикасы, 220030, Минск қ., Интернациональная көшесі, 36/1, Телефон/факс: +375 17 392 28 20

ЖШС «Хьюлетт-Паккард (К)», Қазақстан Республикасы, 050040, Алматы к., Бостандык ауданы, Әл-Фараби даңғ ылы, 77/7, Телефон/факс: +7 (727) 355 35 50

Taiwan

第十二條

經型式認證合格之低功率射頻電機，非經許可，公司、商號或使用者均不得擅自變更頻率、加大功率或變更原設計之特性及功能。

第十四條

低功率射頻電機之使用不得影響飛航安全及干擾合法通信；經發現有干擾現象時，應立即停用，並改善至無干擾時方得繼續使用。

前項合法通信，指依電信法規定作業之無線電通信。

低功率射頻電機須忍受合法通信或工業、科學及醫療用電波輻射性電 機設備之干擾。

Proper Disposal of Aruba Equipment

Dispose of Aruba products per local regulation. For the most current information about Global Environmental Compliance and Aruba products, see our website at www.arubanetworks.com.

Waste of Electrical and Electronic Equipment

Aruba products at end of life are subject to separate collection and treatment in the EU Member States, Norway, and Switzerland and therefore are marked with the symbol shown at the left (crossed-out wheelie bin). The treatment applied at end of life of these products in these countries shall comply with the applicable national laws of countries implementing Directive 2012/19/EU of the European Parliament and of the Council on Waste Electrical and Electronic Equipment (WEEE).

European Union RoHS

Aruba products also comply with the EU Restriction of Hazardous Substances Directive 2011/65/EC (RoHS). EU RoHS restricts the use of specific hazardous materials in the manufacture of electrical and electronic equipment. Specifically, restricted materials under the RoHS Directive are Lead (including Solder used in printed circuit assemblies), Cadmium, Mercury, Hexavalent Chromium, and Bromine. Some Aruba products are subject to the exemptions listed in RoHS Directive Annex 7 (Lead in solder used in printed circuit assemblies). Products and packaging will be marked with the “RoHS” label shown at the left indicating conformance to this directive.

China RoHS

Aruba products also comply with China environmental declaration requirements and are labeled with the “EFUP 25” label shown below.

有毒有害物质声明

Hazardous Materials Declaration

部件名称 (Parts)	有毒有害物质或元素 (Hazardous Substance)					
	铅 (Pb)	汞 (Hg)	镉 (Cd)	六价铬 (Cr^{6+})	多溴联苯 (PBB)	多溴二苯醚 (PBDE)
电路板 (PCA Boards)	×	○	○	○	○	○
机械组件 (Mechanical Sub-Assemblies)	×	○	○	○	○	○

○： 表示该有毒有害物质在该部件所有均质材料中的含量均在 SJ/T11363-2006 标准规定的限量要求以下。
Indicates that the concentration of the hazardous substance in all homogeneous materials in the parts is below the relevant threshold of the SJ/T11363-2006 standard.

×： 表示该有毒有害物质至少在该部件的某一均质材料中的含量超出SJ/T11363-2006标准规定的限量要求。
Indicates that the concentration of the hazardous substance of at least one of all homogeneous materials in the parts is above the relevant threshold of the SJ/T11363-2006 standard.

对销售之日的所售产品，本表显示，供应链的电子信息产品可能包含这些物质。
This table shows where these substances may be found in the supply chain of electronic information products, as of the date of sale of the enclosed product.

此标志为针对所涉及产品的环保使用期标志．某些零部件会有一个不同的环保使用期（例如，电池单元模块）贴在其产品上．
此环保使用期限只适用于产品是在产品手册中所规定的条件下工作．
The Environment- Friendly Use Period (EFUP) for all enclosed products and their parts are per the symbol shown here. The Environment- Friendly Use Period is valid only when the product is operated under the conditions defined in the product manual.

Taiwan RoHS

台灣限用物質含有情況標示

單元	限用物質及其化學符號					
	鉛 (Pb)	汞 (Hg)	鎘 (Cd)	六價鉻 (Cr^{+6})	多溴聯苯 (PBB)	多溴二苯⊠ (PBDE)
傳輸線和線材	○	○	○	○	○	○
外殼	—	○	○	○	○	○
記憶體	○	○	○	○	○	○
其他機械組裝設備	—	○	○	○	○	○
印刷電路零組件 (PCAs)	—	○	○	○	○	○
斷路器 (選配)	—	○	○	○	○	○
冷卻及加熱系統(選配)	○	○	○	○	○	○
風扇(選配)	○	○	○	○	○	○
存取裝置(HDD) (選配)	—	○	○	○	○	○
讀寫元件（CD/DVD/ 磁碟機）(選配)	—	○	○	○	○	○
變壓器/電源供應器(選配)	—	○	○	○	○	○
備考1. 〝○⊠係指該項限用物質之百分比含量未超出百分比含量基準⊠。 備考2. 〝—⊠係指該項限用物質為排除項目。						

選配單元使用於特定產品型號，詳細規格請參照產品說明書。

India RoHS

This product complies with RoHS requirements as prescribed by E-Waste (Management & Handling) Rules, governed by the Ministry of Environment & Forests, Government of India.

Turkey RoHS

Türkiye Cumhuriyeti: EEE Yönetmeliğine Uygundur

Ukraine RoHS

Обладнання відповідає вимогам Технічного регламенту щодо обмеження використання деяких небезпечних речовин в електричному та електронному обладнанні, затвердженого постановою Кабінету Міністрів України від 3 грудня 2008 № 1057

Contacting Support

Table 3 *Contact Information*

Main Site	www.arubanetworks.com
Support Site	https://support.arubanetworks.com
Airheads Social Forums and Knowledge Base	community.arubanetworks.com
North American Telephone	1-800-943-4526 (Toll Free) 1-408-754-1200
International Telephones	http://www.arubanetworks.com/support-services/contact-support/
Software Licensing Site	https://hpe.com/networking/support
End of Support information	http://www.arubanetworks.com/support-services/end-of-life-products/end-of-life-policy/
Security Incident Response Team (SIRT)	Site: http://www.arubanetworks.com/support-services/security-bulletins/ Email: sirt@arubanetworks.com

Copyright

© Copyright 2018 Hewlett Packard Enterprise Development LP

Open Source Code

This product includes code licensed under the GNU General Public License, the GNU Lesser General Public License, and/or certain other open source licenses. A complete machine-readable copy of the source code corresponding to such code is available upon request. This offer is valid to anyone in receipt of this information and shall expire three years following the date of the final distribution of this product version by Hewlett Packard Enterprise Company. To obtain such source code, send a check or money order in the amount of US $10.00 to:

Hewlett Packard Enterprise Company
Attn: General Counsel
3000 Hanover Street
Palo Alto, CA 94304
USA

Warranty

This hardware product is protected by an Aruba warranty. For more details visit www.hpe.com/us/en/support.html