Aruba MST200 Wireless Mesh Router

Installation Guide

The Aruba AirMesh MST200 is a resilient, environmentally hardened, outdoor rated, single-radio IEEE 802.11 a/n wireless mesh access router. This router is part of Aruba's comprehensive wireless network solution.The MST200 delivers high-performance outdoor wireless mesh connectivity for remote locations and devices such as IP video surveillance cameras, remote sensors, and digital signage. The MST200 is also ideal for point-to-point outdoor mesh links between buildings and remote sites.

NOTE

MST200 requires the Aruba MeshOS operating system.

There are two versions of the MST200, which mainly differ in the way they receive power.

- MST2HP: Power over Ethernet+ (PoE+) powered (802.3at)
- MST2HAC: AC powered (100 - 240 VAC)

NOTE

The MST2HAC can function as a Power Sourcing Equipment (PSE) device by providing power through its Ethernet port in compliance with the IEEE 802.3af standard.

Guide Overview

- "MST200 Hardware Overview" on page 3 provides a detailed hardware overview of the two MST200 models.
- "Outdoor Planning and Deployment Considerations" on page 9 provides key questions to ask and items to consider when deploying an outdoor wireless network.
- "Weatherproofing Connections" on page 12 provides instructions on weatherproofing the connectors on the router.
- "Installing the MST200" on page 11 describes the multi-step process for a successful installation and deployment of a MST200.
- "Safety and Regulatory Compliance" on page 21 provides an overview of safety and regulatory compliance information.

MST200 Operations

- Wireless mesh router for backhaul (IEEE 802.11 a/n)
- MST2HP: IEEE 802.3at PoE+ compatible
- MST2HAC: IEEE 802.3af Power Sourcing Equipment (PSE) device

Package Contents

- Aruba MST200 AirMesh Router
- MST200 Mounting Bracket
- MST200 Positioning Bracket
- Pole Anchors x 2
- M6 x 12 bolts, flat washers, and spring washers x5
- M8 x 16 bolts, flat washers, and spring washers x2
- M4 x 12 bolt, external-tooth washer, and OT copper lug x1
- M8 x 110 bolt, flat washers, spring washers, and nuts x4
- RJ-45 Connector Kit
- USB Console Cable
- Installation Guide
- Quick Start Guide

NOTE

The MST200 does not ship with any power cables; these are available as accessories and should be ordered separately.

NOTE

Inform your supplier if there are any incorrect, missing, or damaged parts. If possible, retain the carton, including the original packing materials. Use these materials to repack and return the unit to the supplier if needed.

MST200 Hardware Overview

The following section describes the hardware features of the MST2HP and MST2HAC.

Figure 1 *MST2HP overview*

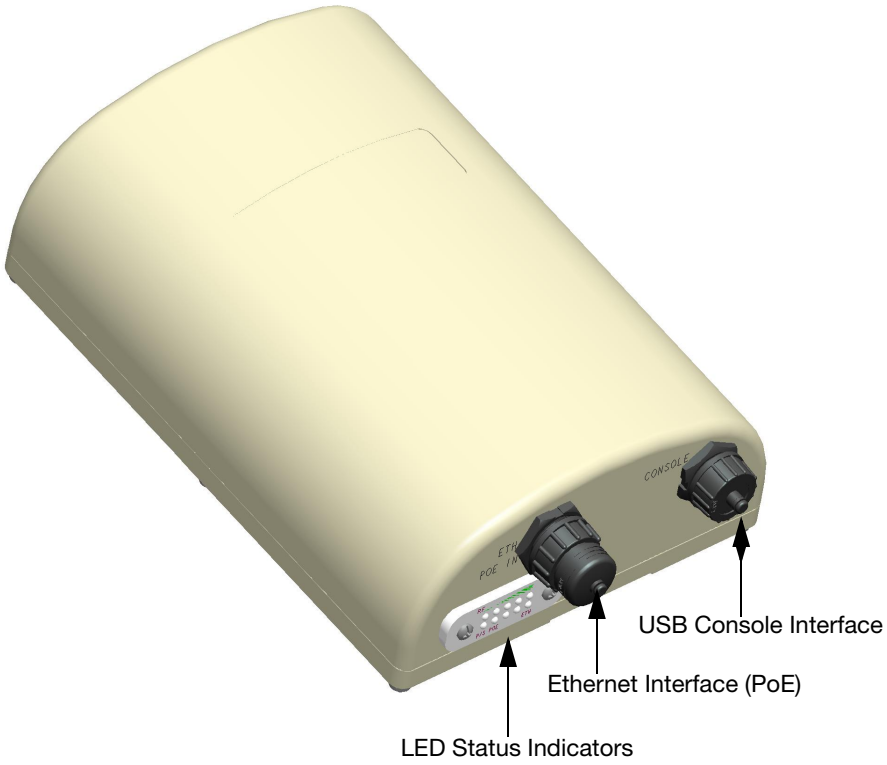

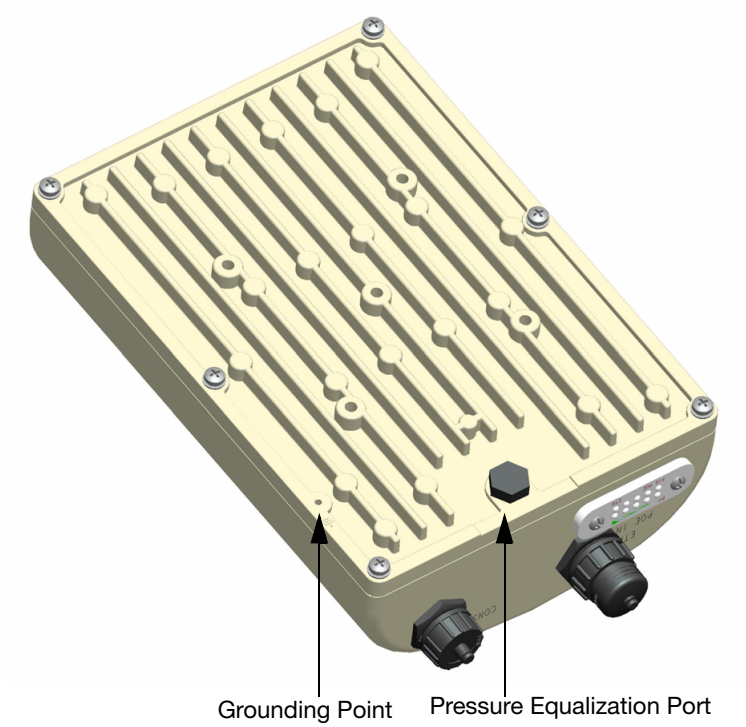

Figure 2 *MST2HAC overview (protective caps removed)*

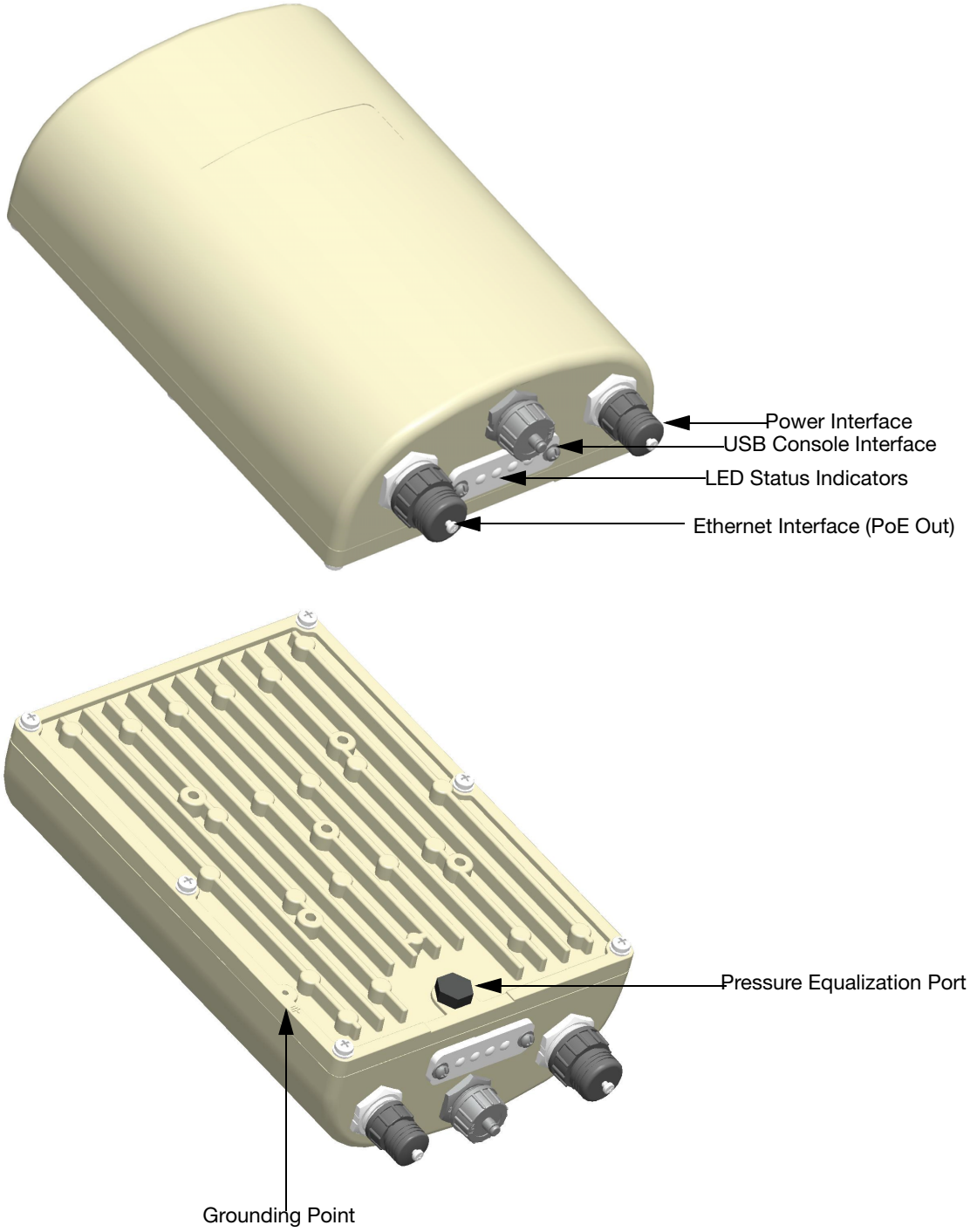

USB Console Interface

A USB serial console port is provided for connection to a terminal, allowing direct local management. Use the included USB console cable to connect to the router. You can download the necessary driver for USB-UART adapter from support.arubanetworks.com under the **Tools & Resources** tab.

Use the following settings to access the terminal:

Table 1 *Console Settings*

Product SKUs	Serial Number	Baud Rate	Data Bits	Parity	Stop Bits	Flow Control
MST2H13N0 MST2H13N0-JP MST2H13N0-US	14 characters (For example: 26A02110500467)	115200	8	None	1	None
MST2HP MST2HP-JP MST2HP-US MST2HAC MST2HAC-JP MST2HAC-US	9 characters (For example: AZ1234567)	9600	8	None	1	None

The baud rate setting depends on the manufacture date of the MST200 (before or after March 2012) and the Serial Number (14 characters or 9 characters). The table above lists all the SKUs for MST200 along with the corresponding baud rate.

Power Interface

The type of power interface on the MST200 depends on the model that you have purchased.

- MST2HP: This version does not include a power interface since it is only powered by PoE+ (802.3at).
- MST2HAC: One AC power connector.

Ethernet Interface

The MST200 is equipped with a 10/100/1000Base-T Gigabit Ethernet port for wired network connectivity. On the MST2HP, this port also supports IEEE 802.3at Power over Ethernet (PoE), accepting 48 VDC as a standards-defined powered device (PD) from a power sourcing equipment (PSE) device, such as a PoE midspan injector. Inversely, the MST2HAC can act as a PSE device to provide IEEE802.3af PoE power to devices such as a video camera, connected to the Ethernet port.

Figure 3 *Connecting a Video Camera to the Ethernet Interface on MST2HAC*

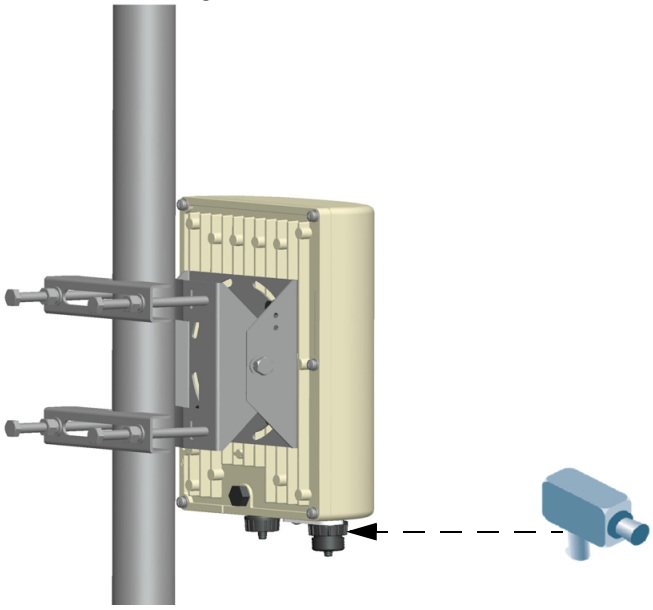

Pressure Equalization Port

The Pressure Equalization port allows air exchange between the MST200 and environment in a controlled way that doesn't allow water to get into the MST200. This balances the pressure and humidity inside and outside the MST200.

Grounding Point

Always remember to protect your MST200 by installing grounding lines. The ground connection must be completed before connecting power to the MST200 enclosure. Ensure that the resistance is less than 5 ohm between the ground termination point and the grounding tier and the cross section of the grounding cable should be no less than 6 square mm.

MST2HP LED Status Indicators

The MST2HP includes visual indicators for power, link, and radio status. Additionally, each radio has a four-LED array that indicates received signal strength (RSSI).

NOTE

The RSSI LED indicators represent varying degrees in the RSSI level. The absence of a signal is indicated by no LED response. All four LEDs are active and lit is an indication of full signal strength.

Figure 4 *MST2HP LED layout*

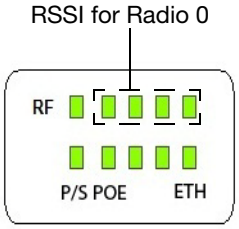

Table 2 lists the meanings of the LEDs on the MST2HP outdoor access point.

Table 2 *MST2HP LED Status Indicators*

LED	Function	Indicator	Status
P/S	Router Power/ Ready Status	Off	No power to the router
		Orange	Device booting, not ready
		Green	Device ready
POE	N/A	N/A	Not currently used
ENT	LAN/Network Link Status	Off	Ethernet link unavailable
		On (Yellow)	10/100 Mbps Ethernet link negotiated
		On (Green)	1000 Mbps Ethernet link negotiated
		Blinking	Traffic on Ethernet link
RF	Radio 0 Status	Off	Radio 0 disabled
		On (Blue)	Radio 0 enabled
RSSI	RSSI Level for Radio 0	Off	RSSI disabled/no signal
		4 Step Progressive Bars (Blue) 25/50/75/100%	Each bar represents a progressive increase in signal strength, with 4 bars representing maximum signal strength (100%). Minimum data rate: One lit LEDs Maximum data rate: Four lit LEDs

MST2HAC LED Status Indicators

The MST2HAC includes visual indicators for power, link, heat, and radio status.

Figure 5 *MST2HAC LED layout*

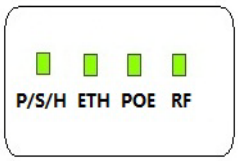

Table 3 lists the meanings of the LEDs on the MST2HAC outdoor access points.

Table 3 *MST2HAC LED Status Indicators*

LED	Function	Indicator	Status
P/S/H	Router Power/ Ready Status/ Displays the heating status of low temperature	Off	No power to the router
		On (Red)	Device alarm
		On (Green)	Device ready
		Blinking	Device booting, not ready
		On (Blue)	Device is pre-heating

Table 3 *MST2HAC LED Status Indicators (Continued)*

LED	Function	Indicator	Status
POE	Displays PSE power output status	Off	Device is not sourcing PoE power
		On (Green)	Device is sourcing PoE power to a powered device in 802.3at mode
		On (Amber)	In 802.3at mode
ENT	LAN/Network Link Status	Off	Ethernet link unavailable
		On (Amber)	10/100 Mbps Ethernet link negotiated
		On (Green)	1000 Mbps Ethernet link negotiated
		Blinking	Traffic on Ethernet link
RF	5GHz Radio Status	Off	No active BSS (for access) and WDS neighbor with uptime < 5s
		On (Amber)	At least one active BSS (for access) or at least one WDS neighbor with uptime >= 5s

NOTE

Starting with MeshOS 4.5, you can turn off the LEDs in the MST200 devices using the WMI and CLI. The LEDs are enabled by default. This option may be used to disable the LED lights in a MST200 device that is mounted in an elevated place on the city streets or residential areas, to avoid unwanted attention or disturbance. This feature turns off only the LED lights that indicate the software status, for example the RF. The LEDs that indicate the hardware status, for example Power, P/S, POE, and ETH, cannot be turned off using this feature. For additional details, refer to the *Aruba MeshOS User Guide* and the *Aruba MeshOS Command Reference Guide*.

Outdoor Planning and Deployment Considerations

Prior to deploying an outdoor wireless network, the environment must be evaluated to plan for a successful Aruba WLAN deployment. Successfully evaluating the environment enables the proper selection of Aruba routers and antennas and assists in the determination of their placement for optimal RF coverage. This process is considered WLAN or RF planning and Aruba's system engineers can assist in the outdoor planning process.

For **WLAN systems being installed outdoors in the USA,** the following requirements must be met.

1. Systems must be **professionally installed** by a qualified engineer familiar with WLAN, including Aruba trained partners and resellers.
2. Operation in the 5600-5650-MHz band is prohibited.
3. When within 35 km distance of a TDWR, the center frequency of the WLAN must be separated from the TDWR center frequency by 30 MHz.
   a. If the radar is operating from 5600-5610 MHz, disable the use of channel 116 (5580 MHz).
   b. If the radar is operating from 5630-5650 MHz, disable the use of channel 132 (5660 MHz).

For TWDR locations in the US please refer to www.wispa.org/tdwr-locations-and-frequencies.

Scale Requirements

The potentially immense scale of outdoor deployments requires consideration of factors that may not be as important in a typical indoor deployment:

- Range (distance): Range or distance between routers must be taken into account during the planning phase. Available mounting locations are often far less flexible in an outdoor environment. Regardless of these outdoor restrictions, the desired goal is to achieve results similar to an indoor deployment: a "dense" RF deployment that supports advanced Aruba features, efficient client roaming, and failover.
- Elevation: Proper consideration and planning for elevation differences between routers (router to router) and router to Client can be *critical* to success. To plan for these differences in elevation, it is important to understand the 3D coverage pattern provided by the antennas that will be deployed in the environment.
- Non-Fixed Considerations: The RF environment might change on a day to day basis. Keep non-fixed items, such as shipping containers, vehicles, and future building construction, in mind when planning for an outdoor deployment.

Identifying Known RF Scatterers/Reflectors/Interferences Sources

Identifying known RF scatterers/reflectors/interference sources while out in the field during the installation phase is critical. Even though outdoor environments consist of fewer RF scatterers/reflectors/interference sources compared to indoor environments, ensure that these sources are identified and taken into consideration when installing and mounting a router to its fixed outdoor location.

RF Scatterers

- Cement/Concrete
- Natural Items: Trees/vegetation
- Brick

RF Reflectors

- Metal Objects: Roof-installed air-conditioning equipment, chain link fences (depending on aperture size), other wire fences, or water pipes.

RF Interference Sources

- Other 802.11a/b/g/n or broadband access equipment operating nearby
- Industrial RF welding equipment or other Industrial, Scientific and Medical (ISM) equipment that utilizes RF to heat or alter the physical properties of materials
- Military, Commercial Aviation or Weather Radar Systems

Line of Sight (Radio Path Planning)

A wireless bridge or mesh link requires a "radio line of sight" between the two antennas for optimum performance. The concept of radio line of sight involves the area along a link through which the bulk of the radio signal power travels. This area is known as the first Fresnel Zone of the radio link. For a radio link, no object (including the ground) must intrude within 60% of the first Fresnel Zone.

Figure 6 illustrates the concept of a good radio line of sight.

Figure 6 *Line of Sight*

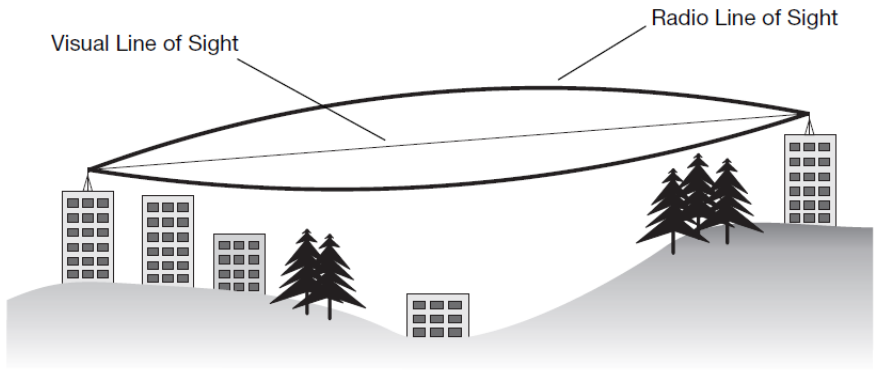

If there are obstacles in the radio path, there may still be a radio link but the quality and strength of the signal will be affected. Calculating the maximum clearance from objects on a path is important as it directly affects the decision on antenna placement and height. It is especially critical for long-distance links, where the radio signal could easily be lost.

When planning the radio path for a wireless bridge or mesh link, consider these factors:

- Avoid any partial line of sight between the antennas
- Be cautious of trees or other foliage that may be near the path, or may grow and obstruct the path.
- Be sure there is enough clearance from buildings and that no building construction may eventually block the path.
- For very long distance links, the curvature of the earth (20 cm per km) may need to be considered in the calculation of relative heights.
- Check the topology of the land between the antennas using topographical maps, aerial photos, or even satellite image data (software packages are available that may include this information for your area)
- Avoid a path that may incur temporary blockage due to the movement of cars, trains, or aircraft.

CAUTION

Never construct a radio mast, pole, or tower near overhead power lines.

NOTE

Local regulations may limit or prevent construction of a high radio mast or tower. If your wireless bridge or mesh link requires a high radio mast or tower, consult a professional contractor for advice.

Radio Interference

The avoidance of radio interference is an important part of wireless link planning. Interference is caused by other radio transmissions using the same or an adjacent channel frequency. You should first scan your proposed site using a spectrum analyzer to determine if there are any strong radio signals using the 802.11a/b/g channel frequencies. Always use a channel frequency that is furthest away from another signal.

If radio interference is still a problem with your wireless bridge or mesh link, changing the antenna direction may improve the situation.

Weather Conditions

When planning wireless bridge or mesh links, you must take into account any extreme weather conditions that are known to affect your location. Consider these factors:

- Temperature: The wireless bridge or mesh link is tested for normal operation in temperatures from -30ºC to 55ºC. Operating in temperatures outside of this range may cause the unit to fail.
- Wind Velocity: The wireless bridge or mesh link can operate in winds up to 165 miles per hour. You must consider the known maximum wind velocity and direction at the site and be sure that any supporting structure, such as a pole, mast, or tower, is built to withstand this force.
- Rain: The wireless bridge or mesh link is weatherproofed against rain. However, it is recommended to apply weatherproof sealing tape around the Ethernet port and antenna connectors for extra protection. If moisture enters a connector, it may cause a degradation in performance or even a complete failure of the link.
- Snow and Ice: Falling snow, like rain, has no significant effect on the radio signal. However, a buildup of snow or ice on antennas may cause the link to fail. In this case, the snow or ice has to be cleared from the antennas to restore operation of the link.

Ethernet Cabling

When a suitable location has been determined for the router, you must plan a cable route from the wireless bridge or mesh link outdoors to a suitable power and/or network source.

Consider these points:

- The Ethernet cable length should never be longer than 90 m (295 ft).
- Determine a building entry point for the cable (if applicable).
- Determine if conduits, bracing, or other structures are required for safety or protection of the cable.
- For lightning protection at the power injector end of the cable, consider using a lightning arrestor immediately before the cable enters the building

Grounding

It is important that the wireless bridge or mesh link, cables, and any supporting structures are properly grounded. Each MST200 router includes a grounding screw for attaching a ground wire. Be sure that grounding is available and that it meets local and national electrical codes. Ground the access point first using the external ground stud on the unit before making any other connection.

Installing the MST200

The MST200 can be installed on a wall or attached to a pole. (Pole diameter must be 40 to 60 mm at the position where the MST200 will be mounted.) The following section describes how to attach the necessary hardware to the router and how to mount the router in the selected location.

NOTE

You can mount the MST200 on a pole with 96mm diameter using M8 x150 long bolts (not provided in the box shipped with MST200).

The mounting assembly for installing MST200 includes the following as shown in Figure 7:

- Pole anchors x 2
- Positioning bracket
- Mounting bracket
- Bolts.

Figure 7 *The mounting assembly*

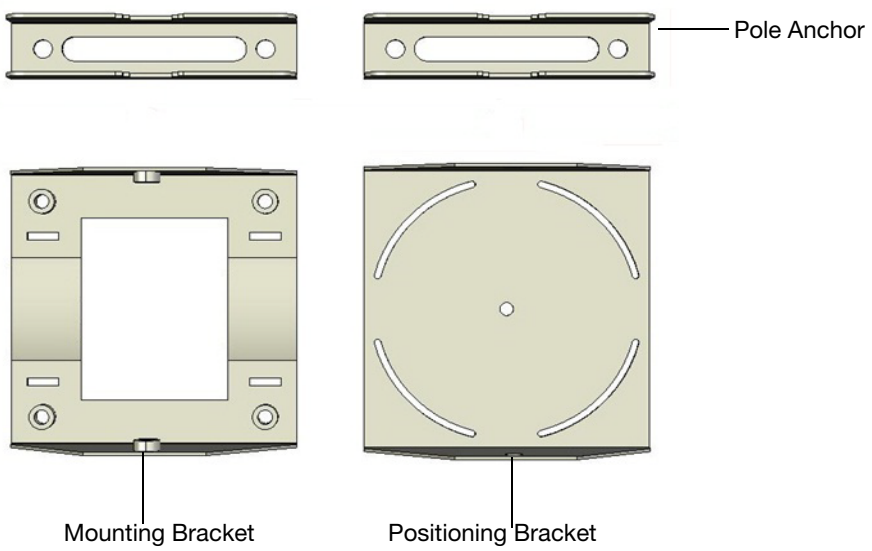

Figure 8 *Bolts*

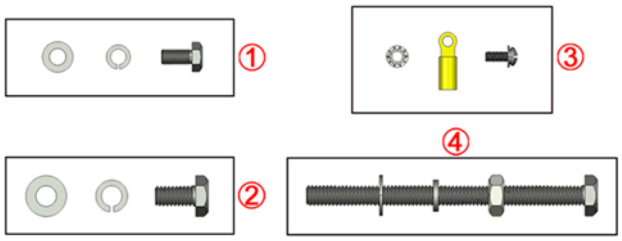

Table 4

1	{M6 x12 bolt, flat washer, spring washer}x5	3	{M4 x12 bolt, external-tooth washer, OT copper lug}x1
2	{M8 x16 bolt, flat washer, spring washer}x2	4	{M8 x110 bolt, flat washer, spring washer, nut}x4

Installing the MST200 on a Pole

1. Fasten the positioning bracket onto the back of the MST200 using the five M6 x 12 bolts (with flat and spring washers). (There is screw thread in the screw hole of the mounting bracket, so nuts are not required)

Figure 9 *Fastening the positioning bracket to the MST200*

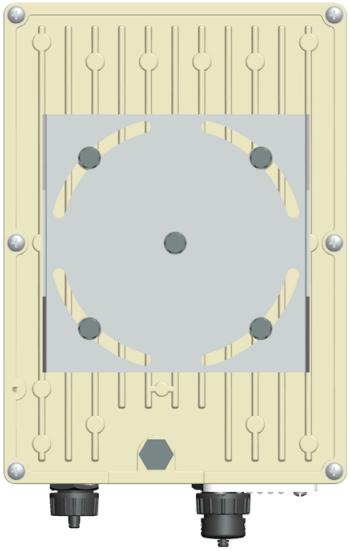

2. Use the two M8 x 16 bolts (with flat washers and spring washers) to fasten the positioning bracket flanges to the mounting bracket flanges.The flange bolts allow the inclination of the MST200 to be adjusted by shifting the angle of the bracket using the fastening bolts as an axis.

Figure 10 *Positioning bracket and mounting bracket bolted at flanges*

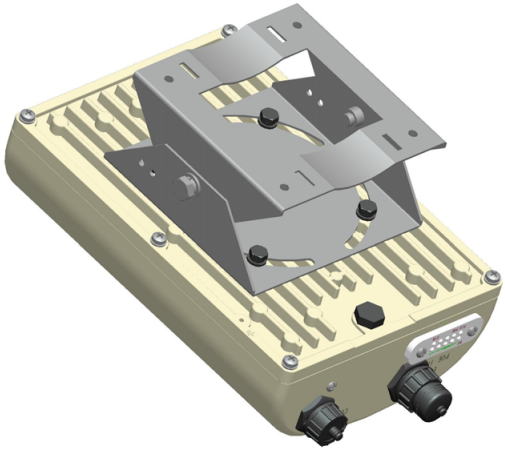

3. Use the four M8 x 110 bolts (with flat washers, spring washers and nuts) and two pole anchors to fasten the mounting bracket to the pole.

NOTE

If the pole diameter is larger than 60mm, you can use stainless straps to fasten the MST200 on the pole. To do so, pass a strap through the two slots on mounting bracket, attach the mounting bracket (with MST200) to the pole, and tighten the strap by using a screw driver to twist its screw head. Use similar straps at the other two slots on the mounting bracket.

Figure 11 *Mounting the MST200 on a pole*

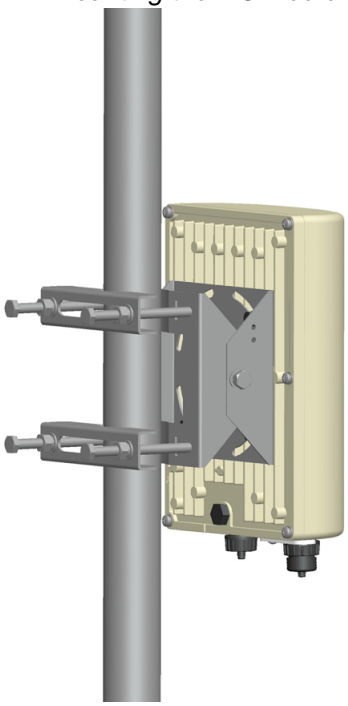

Installing the MST200 on a Wall

1. Begin by marking the screw points on the wall in the location you have selected.
   a. Put the mounting bracket on the installation position against the wall.
   b. Mark four expansion screw holes on the wall.

Figure 12 *Position of the screw holes on the mounting bracket*

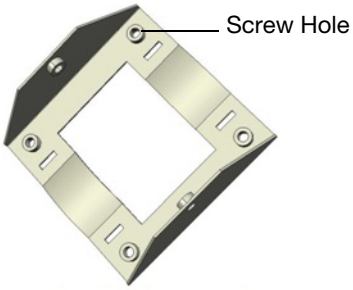

2. Use a drill to create four holes on the four markings you created in the previous step.
3. Install wall (masonry) anchors.
   a. Insert a masonry anchor into each drilled hole.
   b. Tap the flat end of the anchor with a rubber hammer until the anchor is flush with the wall surface.
4. Attach the mounting bracket to the wall.
   a. Align the four holes in the mounting bracket with the anchors and insert four expansion screws through the installation holes into the anchors.
   b. Adjust the position of the mounting bracket and tighten the expansion screws.
5. Fasten the positioning bracket onto the back of the MST200 using the five M6 x 12 bolts (with flat and spring washers). (There is screw thread in the screw hole of the mounting bracket, so nuts are not required).
6. Use the two M8 x 16 bolts (with flat washers and spring washers) to fasten the positioning bracket flanges to the mounting bracket flanges.

Grounding the MST200

The grounding must be completed before powering up the MST200. The resistance of grounding wire should be less than 5 ohm and the grounding cable's cross-section area should be no less than 6 square mm.

Figure 13 *Grounding the MST200*

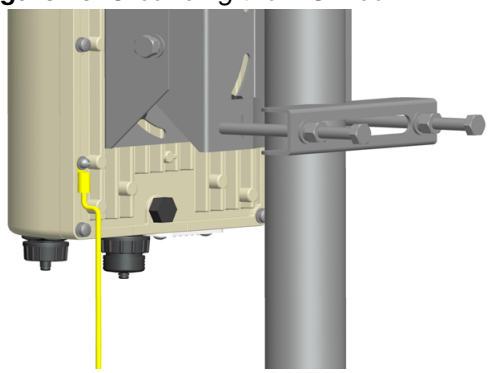

1. Peel the cover of one end of the grounding cable (green or yellow and green grounding cable with 6 square mm cross-section area) and place the bare grounding cable into the copper lug, and press firmly with the crimping pliers.
2. Fasten the copper lug to the grounding hole on the MST200 with the M4 x12 bolt and external-tooth washer.

Connecting the Ethernet Cable

To ensure that your MST2HP maintains Ethernet connectivity and Power over Ethernet (PoE), you must use the included weatherproof connector kit and install it using the steps described in "Cable Connection Steps" on page 16.

WARNING

Failure to use the included weatherproof connector kit can lead to connectivity and PoE issues.

Figure 14 *Waterproof Ethernet Connector Kit*

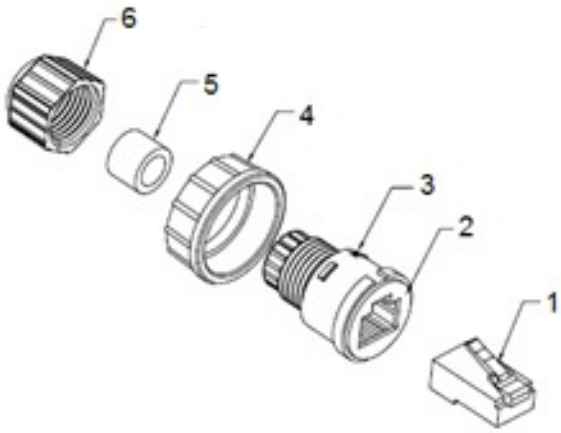

Table 5

1	Shielded RJ45 connector	4	Locknut
2	Gasket Mat	5	Seal Ring

Table 5

3	Waterproof Connector Socket	6	Sealing Nut

Cable Connection Steps

1. Place the locknut over the weatherproof connector socket.
2. Place the sealing nut over an ethernet cable (without a connector attached to the end).
3. Place the seal ring over the ethernet cable.
4. Insert the ethernet cable into the narrow end of the weatherproof connector socket and pass it through the opening on the wide end.
5. Using a crimping tool, attach the included shielded RJ45 connector.
6. Slide the seal ring up the ethernet cable and insert it into the narrow end of the weatherproof connector socket.

NOTE

For outdoor use, the RJ45 must be installed with a waterproofing gasket.

7. Pull the ethernet cable so the shielded RJ45 connector fits into the RJ45 shaped opening in the wide end of the weatherproof connector socket.
8. Slide the sealing nut over the narrow end of the weatherproof connector socket and hand tighten it.
9. Insert the ethernet cable connector into the Ethernet interface and hand-tighten the locknut.
10. Water-proof the Ethernet cable connection with electrical tape and butyl rubber. (Detailed steps please see the "Weatherproofing Connections" on page 12 in this guide)

NOTE

The Ethernet cable and power cable need proper drip loops. Drip loops prevent water from entering the router through the connectors.

Figure 15 *Connecting the Ethernet cable*

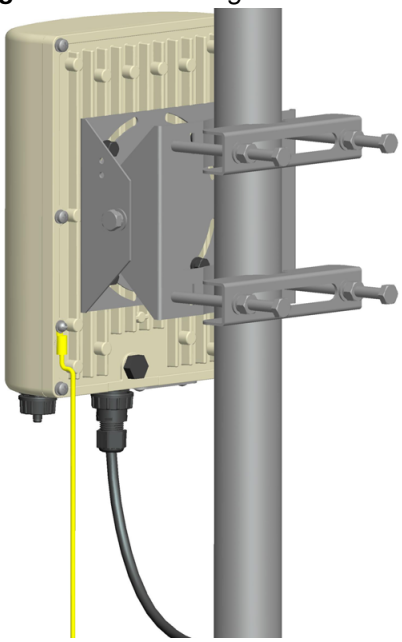

NOTE

It is recommended to fix the Ethernet cable near the MST200 side to the wall or the pole. This is to ensure that the weight of the cable does not affect the RJ45 connector.

Connecting the Power Cable (MST2HAC)

CAUTION

Installation and service of Aruba Networks products should be performed by Professional Installers.

The MST2HAC versions need an outdoor rated power cable to connect to a compatible AC power source.

NOTE

The MST200 does not ship with any power cables; these are available as accessories and should be ordered separately.

- AC power source specifications (at MST200 interface): 100-240Vac, 100W

The MST2HAC product offering offers two ways to connect the unit to AC power. Two power cord variants are offered and a connector kit that allows the customer to assemble their own cable if the standard offering does not meet deployment needs.

The applicable SKUs for these options are:

Table 6 *SKUs for Powering Options*

Part Number	Description
PC-OD-AC-P-NA	Weatherproof AC power cable(5m), North America version
PC-OD-AC-P-INT	Weatherproof AC power cable(5m), International (EU) version
CKIT-OD-AC-P	Weatherproof connector kit for AC power interface

The difference between the NA and INTL part variants is the color coding of the conductors.

- The North American cable uses Black (Hot), White (Neutral), and Green (Ground).
- The INTL part follows the international schema of Brown (Hot), Blue (Neutral) and Yellow/Green (Ground)

Best Practice for Outdoor Connection to AC Mains

In all circumstances and with any outdoor infrastructure the recommended practice is to connect to AC mains in an order grade weather protected junction box. This needs to be implemented by a qualified resource in a manner that is consistent with the electrical code in force in the jurisdiction of deployment. In many countries this will require a licensed electrician to perform this operation.

In Japan, this would is a Certified Electrician by Ministry of Economy, Trade and Industry.

The use of plugs with infrastructure equipment is suitable only for temporary installs where nuisance tripping of GFI plugs is considered tolerable. Should it be desired to attach a plug to the cable assemblies then the installer is expected to follow all directions provided with the plug end in a fashion consistent with local electrical code.

Use of the CKIT-OD-AC-P

Assembly instructions for this part are shipped with the part. All instructions must be followed to ensure proper assembly of the connector onto the cable.

The required specifications for third party cable used with the CKIT solution are as follows:

- AC power cable specifications (when using AC connector kit and custom cable): minimum voltage/current rating 250V/1A, diameter 6-12mm, rated for outdoor use and UV exposure

AC Power Cable Connector PIN OUT

Figure 16 *AC power cable connector*

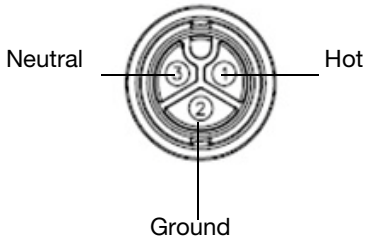

Connecting the Power Cable to the MST2HAC

1. Remove the protective cap on the power interface.
2. Insert the power cable connector into the power interface and hand-fasten the locknut.
3. Water-proof the power cable connection with PVC insulation tape, adhesive insulation tape and strap.

Product Specifications

Mechanical

- Dimensions (H x W x D)
  - 10 inches x 7 inches x 3.3 inches
  - 255mm x 180mm x 82mm
- Weight: 5.18 lbs/2.35 kg
- Shipping Dimensions (H x W x D)
  - 16.7 inches x 13.2 inches x 8.8 inches
  - 425 mm x 335 mm x 225 mm
- Shipping Weight: 9.99 lbs/4.53 kg
- Temperature
  - Operating (MST2HP): -30°C to 60°C (-22°F to 140°F)
  - Operating (MST2HAC): -40°C to 55°C (-40°F to 131°F)
  - Storage: –40°C to 70°C (-40°F to 158°F)
- Relative Humidity: 5% to 95% non-condensing
- Mounting: wall or pole mountable
- Antennas:
  - Built-in antenna
  - Frequency range and max gain:

    5.500 to 5.550 GHz: 11.5dBi

    5.550 to 5.875 GHz: 13dBi
  - Beamwidth:

    E-plane: 13 degrees

    H-plane: 55 degrees
- Visual Status Indicators (LEDs): See Table 2 and Table 3

Electrical

Power In

- MST2HP: 48-volt DC 802.3at power over Ethernet (PoE+)
- MST2HAC: 100-240 volt AC from external AC power source
- Maximum power consumption: 12.5 watts (excludes power consumed by any PoE device connected to and powered by the MST2HAC)

Power Out

- The AC powered models provide an 802.3af PoE power source (PSE) on the Ethernet interface.

Interfaces

- Network:
  - 1 x 10/100/1000BASE-T Ethernet (RJ-45), auto-sensing link speed and MDI/MDX
- Power:
  - 1 x AC power connector (in MST2HAC model only)

- Other:
  - 1 x USB console interface

Wireless LAN

- Router type: single-radio, 802.11a/n 5GHz outdoor
- Supported frequency bands (country-specific restrictions apply):
  - 5.500 to 5.550 GHz
  - 5.550 to 5.875 GHz
- Available channels: Controller-managed, dependent upon configured regulatory domain
- Supported radio technologies:
  - 802.11a/n: Orthogonal frequency division multiplexing (OFDM)
  - 802.11n: 2x2 MIMO with two spatial streams
- Supported modulation types:
  - 802.11a/n: BPSK, QPSK, 16-QAM, 64-QAM
- Maximum transmit power: 25 dBm (325 mW) (limited by local regulatory requirements)
- Maximum ratio combining (MRC) for improved receiver performance
- Association rates (Mbps):
  - 802.11a: 6, 9, 12, 18, 24, 36, 48, 54
  - 802.11n: MCS0 - MCS15 (6.5 Mbps to 300 Mbps)
- 802.11n high-throughput (HT) support: HT 20/40
- 802.11n packet aggregation: A-MPDU, A-MSDU

Safety and Regulatory Compliance

Aruba Networks provides a multi-language document that contains country-specific restrictions and additional safety and regulatory information for all Aruba access points. This document can be viewed or downloaded from the following location: www.arubanetworks.com/safety_addendum

CAUTION

RF Radiation Exposure Statement: This equipment complies with FCC RF radiation exposure limits. This equipment should be installed and operated with a minimum distance of 13.78 inches (35 cm) between the radiator and your body for 2.4 GHz and 5 GHz operations. This transmitter must not be co-located or operating in conjunction with any other antenna or transmitter. When operated in the 5.15 to 5.25 GHz frequency range, this device is restricted to indoor use to reduce the potential for harmful interference with co-channel Mobile Satellite Systems.

CAUTION

Aruba AirMesh routers and the AP-LAR-1 lightning arrestor are required to be installed by a professional installer. The professional installer is responsible for ensuring that grounding is available and it meets applicable local and national electrical codes.

WARNING

Do not work on a router and do not connect or disconnect cables during periods of lightning activity.

FCC Class B Device

This equipment has been tested and found to comply with the limits for a Class B digital device, pursuant to part 15 of the FCC Rules. These limits are designed to provide reasonable protection against harmful interference in a residential installation. This equipment generates, uses and can radiate radio frequency energy and, if not installed and used in accordance with the instructions, may cause harmful interference to radio communications. However, there is no guarantee that interference will not occur in a particular installation. If this equipment does cause harmful interference to radio or television reception, which can be determined by turning the equipment off and on, the user is encouraged to try to correct the interference by one or more of the following measures:

- Reorient or relocate the receiving antenna.
- Increase the separation between the equipment and receiver.
- Connect the equipment into an outlet on a circuit different from that to which the receiver is connected.
- Consult the dealer or an experienced radio/ TV technician for help.

For a complete list of Country Specific Regulations please speak with your Aruba Representative.

Taiwan NCC

注意！

依據 低功率電波輻射性電機管理辦法

第十二條 經型式認證合格之低功率射頻電機，非經許可，公司、商號或使用者均不得擅自變更頻率、加大功率或變更原設計之特性及功能。

第十四條 低功率射頻電機之使用不得影響飛航安全及干擾合法通信；經發現有干擾現象時，應立即停用，並改善至無干擾時方得繼續使用。
前項合法通信，指依電信規定作業之無線電信。低功率射頻電機須忍受合法通信或工業、科學及醫療用電波輻射性電機設備之干擾。

UAE Label (MST2HAC)

TRA
REGISTERED No:
ER0107431/13

DEALER No:
DA0039425/10

Oman(MST2HP)

OMAN - TRA
R/1539/13
D080134

Proper Disposal of Aruba Equipment

For the most current information about Global Environmental Compliance and Aruba products, see our website at www.arubanetworks.com.

Waste of Electrical and Electronic Equipment

Aruba products at end of life are subject to separate collection and treatment in the EU Member States, Norway, and Switzerland and therefore are marked with the symbol shown at the left (crossed-out wheelie bin). The treatment applied at end of life of these products in these countries shall comply with the applicable national laws of countries implementing Directive 2002/96EC on Waste of Electrical and Electronic Equipment (WEEE).

European Union RoHS

Aruba products also comply with the EU Restriction of Hazardous Substances Directive 2002/95/EC (RoHS). EU RoHS restricts the use of specific hazardous materials in the manufacture of electrical and electronic equipment. Specifically, restricted materials under the RoHS Directive are Lead (including Solder used in printed circuit assemblies), Cadmium, Mercury, Hexavalent Chromium, and Bromine. Some Aruba products are subject to the exemptions listed in RoHS Directive Annex 7 (Lead in solder used in printed circuit assemblies). Products and packaging will be marked with the “RoHS” label shown at the left indicating conformance to this Directive.

China RoHS

Aruba products also comply with China environmental declaration requirements and are labeled with the “EFUP 25” label shown at the left.

有毒有害物質聲明 Hazardous Materials Declaration						
部件名称 (Parts)	有毒有害物質或元素(Hazardous Substances)					
	铅 Lead (Pb)	汞 Mercury (Hg)	镉 Cadmium (Cd)	六价铬 Chromium VI Compounds (Cr6+)	多溴联 苯 Polybrominated Biphenyls (PBB)	多溴 二苯醚 Polybrominated Diphenyl Ether (PBDE)
电 路板 PCA Board	X	O	O	O	O	O
机械组 件 Mechanical Subassembly	X	O	O	O	O	O

O: 表示该 有毒有害物质 在该 部件所有均质 材料中的含量均在SJ/T11363-2006标 准规 定的限量要求以下。
This component does not contain this hazardous substance above the maximum concentration values in homogeneous materials specified in the SJ/T11363-2006 Industry Standard.

X: 表示该 有毒有害物质 至少在该 部件的某一均质 材料中的含量超出SJ/T11363-2006标 准规 定的限量要求。
This component does contain this hazardous substance above the maximum concentration values in homogeneous materials specified in the SJ/T11363-2006 Industry Standard.

对销售之日的所售产品,本表显示,供应链的电子信息产品可能包含这些物质。
This table shows where these substances may be found in the supply chain of electronic information products, as of the date of sale of the enclosed product.

此标志为针对所涉及产品的环保使用期标志.
某些零部件会有一个不同的环保使用期,例如,电池单元模块,贴在其产品上. 此环保使用期限只适用于产品是在产品手册中所规定的条件下工作.
The Environment- Friendly Use Period (EFUP) for all enclosed products and their parts are per the symbol shown here. The Environment- Friendly Use Period is valid only when the product is operated under the conditions defined in the product manual.

This page is intentionally left blank.

Contacting Aruba Networks

Web Site Support	
Main Site	http://www.arubanetworks.com
Support Site	https://support.arubanetworks.com
Software Licensing Site	https://licensing.arubanetworks.com/login.php
Wireless Security Incident Response Team (WSIRT)	http://www.arubanetworks.com/support/wsirt.php
Support Emails	
• Americas and APAC	support@arubanetworks.com
• EMEA	emea.support@arubanetworks.com
WSIRT Email Please email details of any security problem found in an Aruba product.	wsirt@arubanetworks.com

Telephone Support	
Aruba Corporate	+1 (408) 227-4500
FAX	+1 (408) 227-4550
Support	
• United States	800-WI-FI-LAN (800-943-4526)
• Universal Free Phone Service Number (UIFN): Australia, Canada, China, France, Germany, Hong Kong, Ireland, Israel, Japan, Korea, Singapore, South Africa, Taiwan, and the UK.	+800-4WIFI-LAN (+800-49434-526)
• All Other Countries	+1 (408) 754-1200

© 2014 Aruba Networks, Inc. All rights reserved.

0511351-02

www.arubanetworks.com

1344 Crossman Avenue
Sunnyvale, California 94089

Phone: 408.227.4500
Fax 408.227.4550