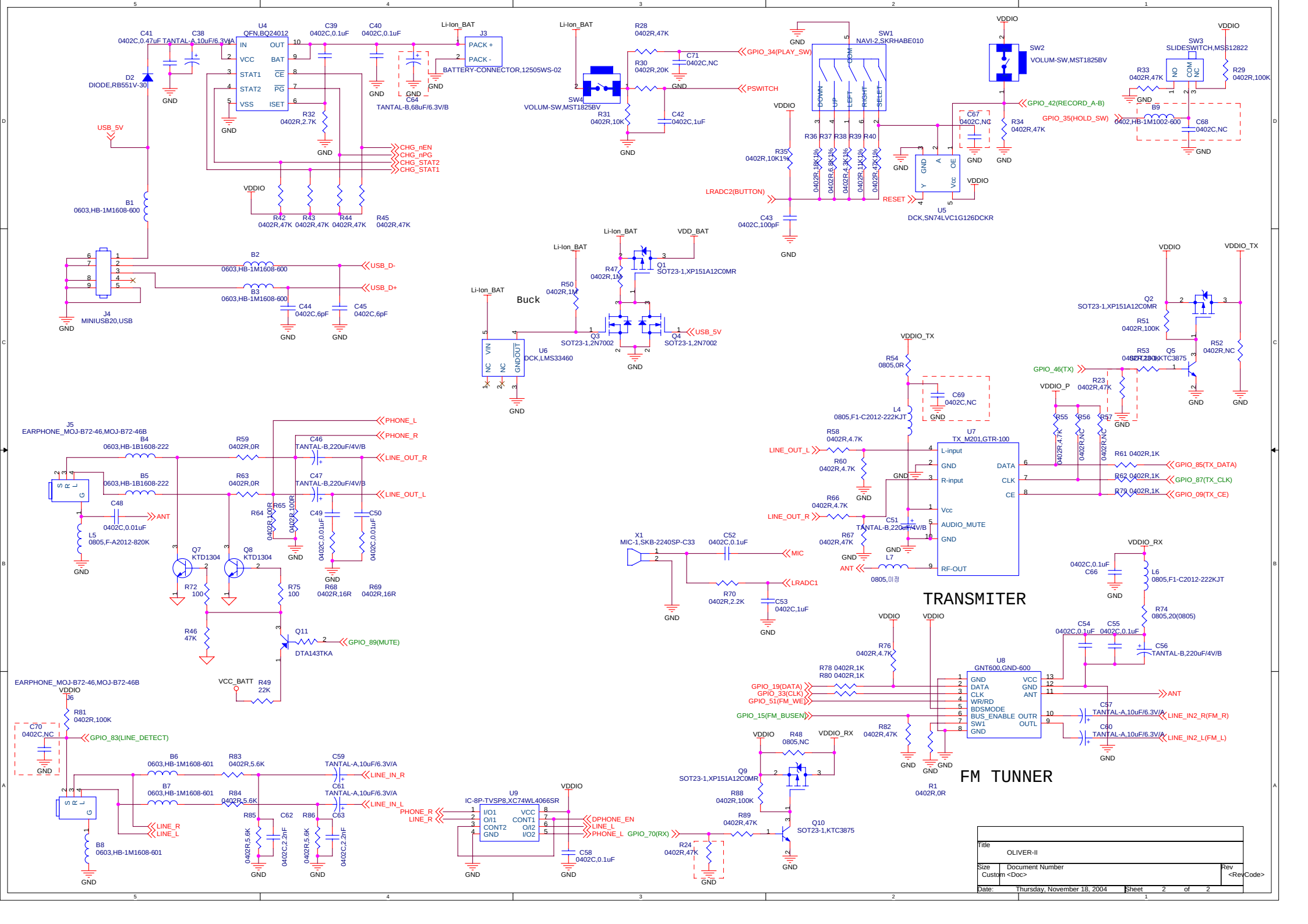
U4
QFN,BQ24012
IN
OUT
VCC
BAT
STAT1
CE
STAT2
PG
VSS
ISET
C41
0402C,0.47uF
C38
TANTAL-A,10uF/6.3V/A
C39
0402C,0.1uF
C40
0402C,0.1uF
Li-Ion_BAT
J3
PACK +
PACK -
BATTERY-CONNECTOR,12505WS-02
C64
TANTAL-B,68uF/6.3V/B
D2
DIODE,RB551V-30
USB_5V
R32
0402R,2.7K
CHG_nEN
CHG_nPG
CHG_STAT2
CHG_STAT1
VDDIO
R42
0402R,47K
R43
0402R,47K
R44
0402R,47K
R45
0402R,47K
B1
0603,HB-1M1608-600
B2
0603,HB-1M1608-600
B3
0603,HB-1M1608-600
USB_D-
USB_D+
C44
0402C,6pF
C45
0402C,6pF
J4
MINIUSB20,USB
GND
R28
0402R,47K
R30
0402R,20K
C71
0402C,NC
GPIO_34(PLAY_SW)
PSWITCH
SW4
VOLUM-SW,MST1825BV
R31
0402R,10K
C42
0402C,1uF
SW1
NAVI-2,SKRHABE010
COM
DOWN
UP
LEFT
RIGHT
SELECT
R36
R37
R38
R39
R40
0402R,10K1%
0402R,6.8K1%
0402R,4.3K1%
0402R,11K1%
0402R,47K1%
SW2
VOLUM-SW,MST1825BV
GPIO_42(RECORD_A-B)
GPIO_35(HOLD_SW)
C67
0402C,NC
R34
0402R,47K
SW3
SLIDESWITCH,MSS12822
NO
COM
NC
R33
0402R,47K
R29
0402R,100K
B9
0402,HB-1M1002-600
C68
0402C,NC
R35
0402R,10K1%
LRADC2(BUTTON)
C43
0402C,100pF
RESET
U5
DCK,SN74LVC1G126DCKR
GND
Buck
VDD_BAT
R47
0402R,1M
Q1
SOT23-1,XP151A12C0MR
R50
0402R,1M
Q3
SOT23-1,2N7002
Q4
SOT23-1,2N7002
USB_5V
U6
DCK,LMS33460
VIN
NC
GNDOUT
VDDIO_TX
Q2
SOT23-1,XP151A12C0MR
R51
0402R,100K
R52
0402R,NC
R53
Q5
SOT23-1,KTC3875
GPIO_46(TX)
R23
0402R,47K
VDDIO_P
R54
0805,0R
C69
0402C,NC
L4
0805,F1-C2012-222KJT
R55
R56
R57
0402R,4.7K
0402R,NC
0402R,NC
R58
0402R,4.7K
LINE_OUT_L
R60
0402R,4.7K
U7
TX_M201,GTR-100
L-input
GND
R-input
Vcc
AUDIO_MUTE
GND
RF-OUT
DATA
CLK
CE
R61 0402R,1K
R62 0402R,1K
R79 0402R,1K
GPIO_85(TX_DATA)
GPIO_87(TX_CLK)
GPIO_09(TX_CE)
R66
0402R,4.7K
LINE_OUT_R
C51
TANTAL-B,220uF/4V/B
R67
0402R,47K
ANT
L7
0805,미정
TRANSMITER
J5
EARPHONE_MOJ-B72-46,MOJ-B72-46B
B4
0603,HB-1B1608-222
R59
0402R,0R
C46
TANTAL-B,220uF/4V/B
PHONE_L
PHONE_R
LINE_OUT_R
B5
0603,HB-1B1608-222
R63
0402R,0R
C47
TANTAL-B,220uF/4V/B
LINE_OUT_L
C48
0402C,0.01uF
ANT
L5
0805,F-A2012-820K
R64
R65
0402R,100R
0402R,100R
C49
0402C,0.01uF
C50
0402C,0.01uF
Q7
KTD1304
Q8
KTD1304
R72
100
R75
100
R68
0402R,16R
R69
0402R,16R
R46
47K
Q11
DTA143TKA
GPIO_89(MUTE)
VCC_BATT
R49
22K
X1
MIC-1,SKB-2240SP-C33
C52
0402C,0.1uF
MIC
LRADC1
R70
0402R,2.2K
C53
0402C,1uF
VDDIO_RX
C66
0402C,0.1uF
L6
0805,F1-C2012-222KJT
R74
0805,20(0805)
C54
0402C,0.1uF
C55
0402C,0.1uF
C56
TANTAL-B,220uF/4V/B
R76
0402R,4.7K
R78 0402R,1K
R80 0402R,1K
U8
GNT600,GND-600
GND
DATA
CLK
WR/RD
BDSMODE
BUS_ENABLE
SW1
GND
VCC
GND
ANT
OUTR
OUTL
GPIO_19(DATA)
GPIO_33(CLK)
GPIO_51(FM_WE)
GPIO_15(FM_BUSEN)
C57
TANTAL-A,10uF/6.3V/A
LINE_IN2_R(FM_R)
C60
TANTAL-A,10uF/6.3V/A
LINE_IN2_L(FM_L)
R82
0402R,47K
R1
0402R,0R
FM TUNNER
EARPHONE_MOJ-B72-46,MOJ-B72-46B
J6
R81
0402R,100K
C70
0402C,NC
GPIO_83(LINE_DETECT)
B6
0603,HB-1M1608-601
R83
0402R,5.6K
C59
TANTAL-A,10uF/6.3V/A
LINE_IN_R
B7
0603,HB-1M1608-601
R84
0402R,5.6K
C61
TANTAL-A,10uF/6.3V/A
LINE_IN_L
LINE_R
LINE_L
B8
0603,HB-1M1608-601
R85
C62
R86
C63
0402R,5.6K
0402C,2.2nF
0402R,5.6K
0402C,2.2nF
U9
IC-8P-TVSP8,XC74WL4066SR
I/O1
O/I1
CONT2
GND
VCC
CONT1
O/I2
I/O2
PHONE_R
LINE_R
DPHONE_EN
LINE_L
PHONE_L
C58
0402C,0.1uF
R48
0805,NC
Q9
SOT23-1,XP151A12C0MR
R88
0402R,100K
R89
0402R,47K
Q10
SOT23-1,KTC3875
GPIO_70(RX)
R24
0402R,47K
Title
OLIVER-II
Size
Document Number
Rev
Custom
<Doc>
<RevCode>
Date:
Thursday, November 18, 2004
Sheet
2
of
2