stryker

SONOPET iQ® Ultrasonic Aspirator System

Instructions For Use

R_x ONLY

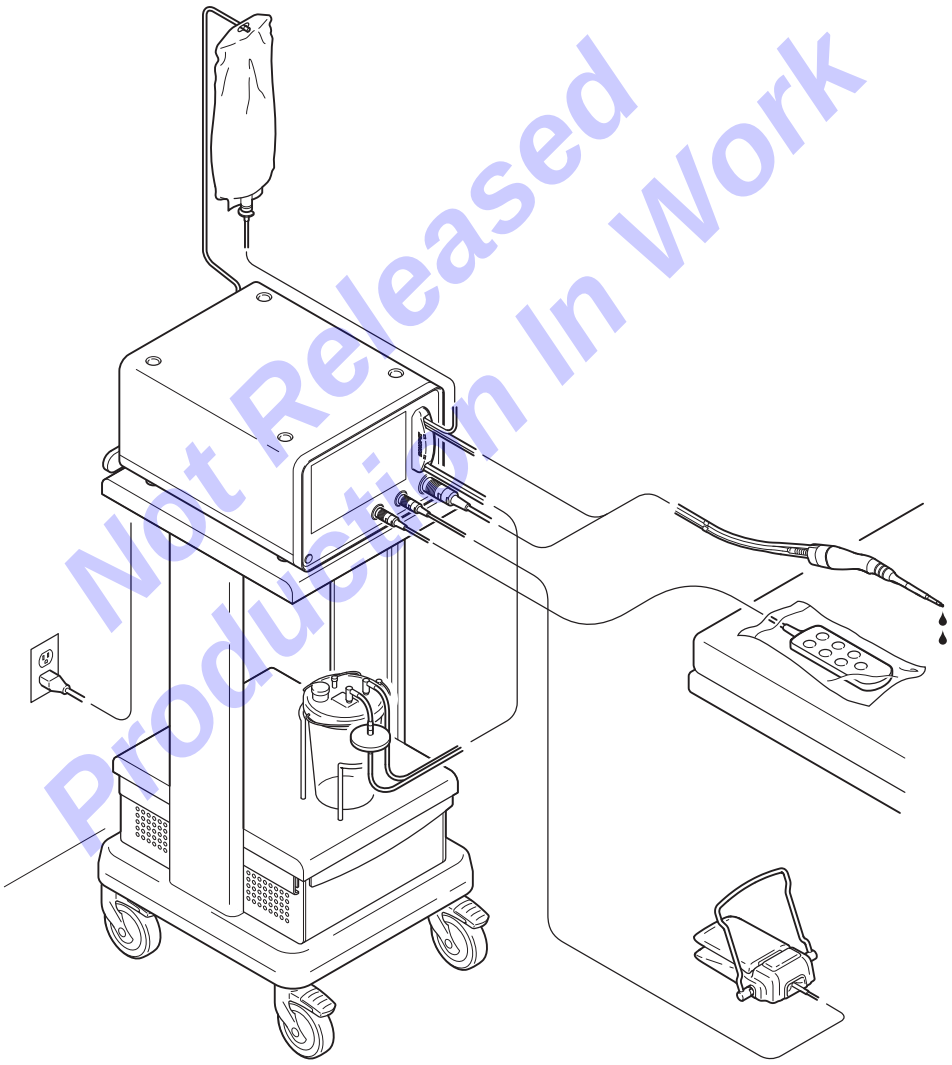

Not Released
Production In Work

Software Version

2.X.X

ENGLISH (EN)

(01)07613327479898

Not Released
Production In Work

Contents

1 Introduction 8
1.1 Audience 8
1.2 Conventions 8
1.3 Contact Information. 8
2 Safety 8
2.1 System Indications 8
2.2 System Contraindications 8
2.3 Safety Directives 9
2.3.1 General Safety 9
2.3.2 Electrical Safety 9
2.3.3 Magnetic Resonance (MR) Safety. 9
2.3.4 Surgical Procedure Safety 9
2.3.5 Electrosurgical RF Device Safety 9
3 System Overview. 10
3.1 Components and Interfaces. 10
3.2 Operation 11
3.3 For Use With. 12
3.4 Intended Use 13
3.4.1 Handpiece 13
3.4.2 Tip and Sleeve 13
3.4.3 Irrigation Suction Cassette 13
3.4.4 Foot Pedal 13
3.4.5 Hand Controller 13
4 Features. 14
4.1 Component Interfaces 14
4.1.1 Console Front Panel 14
4.1.2 Console Back Panel 15
4.1.3 Handpiece 16
4.1.4 Tip and Sleeve 17
4.1.5 Irrigation Suction Cassette 18
4.1.6 Basic Foot Pedal 19
4.1.7 Advanced and Wireless Advanced Foot Pedals. 20
4.1.8 Hand Controller. 21
4.2 Software Interface(s) 22
4.2.1 Console Menu Structure 22
4.2.2 Screens and Pop-ups 23
4.2.2.1 Home/Preset Edit Screen 23
4.2.2.2 Preset/Settings Management Screen . .24
4.2.2.3 Data Entry Screen 25
4.2.2.4 Settings Screen 26
4.2.2.5 System Setup Screen 27
4.2.2.6 Component Setup Screen 28
4.2.2.7 Pop-ups 29
4.2.3 Buttons 30
5 Definitions 34
6 Instructions 38
6.1 Before First Use 38
6.1.1 To Unpack and Inspect Components. 38
6.1.2 To Perform Initial Installation 38
6.1.3 To Manage Settings 39
6.1.3.1 To Adjust Brightness 39
6.1.3.2 To Adjust Volume 40
6.1.3.3 To Manage CONTACT INFO 41
6.1.4 To View Setup Information 44
6.1.4.1 To Access Handpiece Tip Setup 44
6.1.4.2 To Access Tubing Setup. 44
6.1.4.3 To Select Display Screen Language . . .45
6.1.5 To Pair a Wireless Foot Pedal 45
6.1.6 To Import or Export a Preset 46
6.1.7 To View System Information 47
6.1.8 To Manage the Presets 47
6.1.8.1 To Create a Preset 47
6.1.8.2 To Select a Preset 48
6.1.8.3 To Select a Favorite Preset 49
6.1.8.4 To Edit a Preset 49
6.1.8.5 To Copy a Preset 50
6.1.8.6 To Delete a Preset 51
6.1.9 To Clean and Disinfect the Console 51
6.1.10 To Prepare the Foot Pedal 51
6.1.10.1 To Install or Replace the Batteries (Wireless Advanced Foot Pedal Only) 51
6.1.10.2 To Clean and Disinfect the Foot Pedal .51
6.1.11 To Prepare the Handpiece 52
6.1.11.1 To Clean and Sterilize the Handpiece . .52
6.1.12 To Prepare the Hand Controller (Optional). .52

Not Released
Production In Work

6.2 Before the Procedure 52
6.2.1 To Prepare the Console. 52
6.2.1.1 To Connect Console Power 52
6.2.1.2 To Install the Fluid Waste Suction Canister 53
6.2.1.3 To Hang the Collapsible Irrigation Container 53
6.2.2 To Connect the Foot Pedal 53
6.2.3 To Prepare the Handpiece 55
6.2.3.1 To Transfer the Handpiece into the Sterile Field 55
6.2.3.2 To Connect the Handpiece to the Console (Outside Sterile Field) 55
6.2.3.3 To Transfer a Tip and Sleeve into the Sterile Field 55
6.2.3.4 To Install a Tip and Sleeve on the Handpiece. 56
6.2.3.5 To Confirm a Tip and Sleeve Installation 57
6.2.4 To Install the Irrigation Suction Cassette . . .58
6.2.4.1 To Transfer the Irrigation Suction Cassette into the Sterile Field. 58
6.2.4.2 To Connect the Suction Canister, Cassette, and Irrigation Tubing (Outside Sterile Field) . . .58
6.2.4.3 To Connect the Handpiece Tubing Connector (Inside Sterile Field) 59
6.2.5 To Fill (Prime) the Irrigation Tubing 60
6.2.6 To Connect the Hand Controller (Optional) . .61
6.2.7 To Test the Handpiece Before Use 63
6.3 During the Procedure 63
6.3.1 To Operate the Handpiece 63
6.3.2 To Flush the Irrigation Tubing 64
6.3.3 To Adjust Power, Suction, Irrigation, and Pulse Control (optional) Setting Values 64
6.3.4 To Restore the Settings 65
6.3.5 To Change a Preset Selection. 65
6.3.6 To Clear a Clogged Tip 65
6.3.7 To Inspect a Tip and Tip Sleeve 66
6.3.8 To Replace a Tip and Sleeve Set 66
6.3.9 To Enable or Disable the Handpiece Power Indicator 66
6.3.10 To Change a System Setting 66
6.4 After the Procedure 67
6.4.1 To Remove Power 67
6.4.2 To Remove System Components 67
6.4.2.1 To Remove and Disassemble the Handpiece. 68
6.4.2.2 To Initially Treat at Point of Use 69
6.4.2.3 To Transport to the Decontamination Area 69
6.4.2.4 To Disconnect and Dispose of the Irrigation Suction Cassette. 70
6.4.2.5 To Disconnect the Hand Controller . . .70
6.4.2.6 To Disconnect the Foot Pedal and Receiver. 71
6.4.2.7 To Clean and Disinfect the Console . . .71
7 Cleaning and Disinfection. 72
7.1 Recommended Equipment and Materials. 72
7.2 To Clean and Disinfect the Power Cord, Foot Pedal(s), Wireless Receiver, and Hand Controller. . .72
7.3 To Clean and Disinfect the Console 73
8 Inspection and Maintenance 74
8.1 To Inspect the Equipment. 74
8.2 To Replace the Wireless Foot Pedal Batteries . .75
8.3 To Perform Functional Check Procedure (Optional) 75
9 Storage and Transport 75
10 Troubleshooting 76
11 Pop-up Codes, Messages, and Corrective Actions. .82
12 Service 89
13 Disposal/Recycle 89
13.1 Console 90
13.2 Handpiece 90
13.3 Tip/Sleeve and Irrigation Suction Cassette . . .91
13.4 Foot Pedal(s) and Hand Controller 91
14 Specifications 92
14.1 Console Specifications 92
14.2 Power Cord Specifications (general) 94
14.3 Power Cord Requirements (specific) 94
14.4 Handpiece Specifications 94
14.5 Tips and Sleeves Specifications 95
14.5.1 Laparoscopic Tip and Sleeve Specification .96
14.6 Irrigation Suction Cassette Specifications 96

Not Released
Production In Work

14.7 Hand Controller Specifications 97

14.8 Foot Pedal(s) and Wireless Receiver Specifications 98

15 Electromagnetic Compatibility 99

16 Glossary 103

17 Intellectual Property 103

17.1 Software License Notices 103

17.2 Trademarks 103

List of Figures

Figure 1 – System Block Diagram 10

Figure 2 – Handpiece Irrigation/Suction Flow Diagram 11

Figure 3 – Soft Tissue Fragmentation 11

Figure 4 – Hard Tissue Fragmentation 11

Figure 5 – Console Front Panel Features. 14

Figure 6 – Console Back Panel Features. 15

Figure 7 – Handpiece Features 16

Figure 8 – Tip and Sleeve Features 17

Figure 9 – Irrigation Suction Cassette Features 18

Figure 10 – Basic Foot Pedal Features. 19

Figure 11 – Advanced and Wireless Advanced Foot Pedal Features 20

Figure 12 – Hand Controller Features 21

Figure 13 – Menu Structure 22

Figure 14 – Home Screen. 23

Figure 15 – Preset Screen 24

Figure 16 – Keyboard Screen - Create New Preset Workflow. 25

Figure 17 – Settings Screen. 26

Figure 18 – System Setup Screen 27

Figure 19 – Cassette Tubing Setup Screen. 28

Figure 20 – Error Message Pop-up 29

Figure 21 – Confirmation Message Pop-up. 29

Figure 22 – Notification Message Pop-up 29

Figure 23 – Initial Installation 38

Figure 24 – Initial Language Selection 39

Figure 25 – Brightness Selection 39

Figure 26 – Brightness Screen 40

Figure 27 – Volume Selection 40

Figure 28 – Volume Screen 40

Figure 29 – Contact Info Selection. 41

Figure 30 – Create CONTACT INFO Entry 41

Figure 31 – Enter CONTACT INFO Name. 41

Figure 32 – Enter CONTACT INFO Telephone Number 42

Figure 33 – Enter CONTACT INFO E-mail Address . . .42

Figure 34 – Edit CONTACT INFO Information 42

Figure 35 – Edit CONTACT INFO Name 42

Figure 36 – Edit CONTACT INFO Telephone Number 43

Figure 37 – Edit CONTACT INFO E-mail Address 43

Figure 38 – Delete CONTACT INFO Information. 43

Figure 39 – Confirm CONTACT INFO Deletion 43

Figure 40 – Handpiece Tip Setup Selection 44

Figure 41 – Handpiece Tip Setup Screen 44

Figure 42 – Tubing Setup Selection 44

Figure 43 – Tubing Setup Screen 44

Figure 44 – Language Selection. 45

Figure 45 – Language Screen. 45

Figure 46 – Access Wireless Connection 45

Figure 47 – Wireless Connection Screen. 46

Figure 48 – Foot Pedal Pair Wireless Position 46

Figure 49 – Successful Wireless Foot Pedal Pairing . .46

Figure 50 – System Info Selection 47

Figure 51 – System Information Screen 47

Figure 52 – Preset Access 47

Figure 53 – Create Preset. 47

Figure 54 – Enter Preset Name 48

Figure 55 – Select Tip 48

Figure 56 – Select Preset Settings. 48

Figure 57 – Preset Selection 48

Figure 58 – Confirm Preset Selection 49

Figure 59 – Favorite Preset Selection 49

Figure 60 – Confirm Favorite Preset 49

Figure 61 – Edit Preset Settings 49

Figure 62 – Select Tip 50

Figure 63 – Confirm Preset Settings 50

Figure 64 – Copy Preset Selection 50

Figure 65 – Rename Preset 50

Not Released Production In Work

Figure 66 – Delete Preset Selection 51
Figure 67 – Confirm Preset Deletion 51
Figure 68 – Access Foot Pedal Batteries. 51
Figure 69 – Install Foot Pedal Batteries 51
Figure 70 – Close/Lock Battery Compartment Door. . .51
Figure 71 – System Setup Screen 52
Figure 72 – Console Preparation 53
Figure 73 – Wired Foot Pedal Connection 53
Figure 74 – Wireless Receiver Connection 53
Figure 75 – Foot Pedal Power ON 54
Figure 76 – Successful Wired Foot Pedal Connection 54
Figure 77 – Console - Wireless Foot Pedal Proximity. 54
Figure 78 – Adjustable Toe Loop Positions 54
Figure 79 – Handpiece Connection 55
Figure 80 – Torque Wrench Application 56
Figure 81 – Tip Installation 56
Figure 82 – Torque Wrench Orientation 56
Figure 83 – Tip Tightening 56
Figure 84 – Tip Sleeve Installation 56
Figure 85 – Sleeve Frangible Section Removal 57
Figure 86 – Suction Control Disabled 57
Figure 87 – Irrigation Suction Cassette Bundles 58
Figure 88 – Suction Canister Tubing Connections . . .58
Figure 89 – Optional Specimen Collector 59
Figure 90 – Irrigation Suction Cassette Installation . . .59
Figure 91 – Irrigation Bag Connection 59
Figure 92 – Disposable Cleaning Wire Removal 59
Figure 93 – Handpiece Tubing Connector Installation 60
Figure 94 – Handpiece Cable Clips Installation 60
Figure 95 – Quick Start Confirmation Pop-up. 60
Figure 96 – INITIAL PRIME Pop-up. 60
Figure 97 – INITIAL PRIME Button Prompt (pulsing) . . .60
Figure 98 – Tip Irrigation 61
Figure 99 – Hand Controller Connection 61
Figure 100 – Hand Controller Body in Sterile Drape . . .61
Figure 101 – Complete System Configuration with (optional) Hand Controller. 62
Figure 102 – Home Screen 63
Figure 103 – Irrigation Flush Button 64
Figure 104 – Low Irrigation WARNING Pop-up 65
Figure 105 – Settings Restoration Screen 65
Figure 106 – Cleaning Wire Insertion. 65
Figure 107 – Tip Damage 66
Figure 108 – Tip Sleeve Damage 66
Figure 109 – Handpiece Power Indicator Control 66
Figure 110 – Power Cord Locking Mechanism 67
Figure 111 – Handpiece Disconnection 68
Figure 112 – Handpiece Cable and Tubing Separation 68
Figure 113 – Handpiece Tubing Connector Disconnection 68
Figure 114 – Tip Sleeve Removal 68
Figure 115 – Tip Loosening 68
Figure 116 – Tip Removal 69
Figure 117 – Sterilization Tray Device Placement 69
Figure 118 – Irrigation Suction Cassette Removal. . . .70
Figure 119 – Suction Canister Removal 70
Figure 120 – All Suction Canister Ports Closed 70
Figure 121 – Irrigation Bag Removal 70
Figure 122 – Hand Controller Removal 70
Figure 123 – Sterile Drape Removal 71
Figure 124 – Foot Pedal or Wireless Receiver Removal 71
Figure 125 – Foot Pedal Cord Wrap 71
Figure 126 – Foot Pedal Critical Wipe Down Areas . . .72
Figure 127 – Console Critical Wipe Down Areas 73

Not Released
Production In Work

List of Tables

Table 1 – Components, Accessories, and Replacement Parts 12

Table 2 – Button Functions 30

Table 3 – Console Product Markings 34

Table 4 – Handpiece Product Mark(s) 35

Table 5 – Tip and Sleeve Product/Packaging Mark(s). .35

Table 6 – Step Torque Wrench Product Mark(s) 35

Table 7 – Irrigation Suction Cassette Product Mark(s) .35

Table 8 – Foot Pedal(s) Product Mark(s). 35

Table 9 – Hand Controller Product Mark(s). 36

Table 10 – ISO 7000 — Graphical symbols for use on equipment - Registered Symbols 36

Table 11 – BS EN ISO 7010 Graphical symbols — Safety colors and safety signs — Registered safety signs . . .36

Table 12 – IEC 60417 Graphical symbols for use on equipment 36

Table 13 – Console Color Indicators 37

Table 14 – Handpiece **Color(s)** **37**

Table 15 – Audible Indicators 37

Table 16 – Abbreviations 37

Table 17 – Components Supplied with Console. 38

Table 18 – Default Setting Values 39

Table 19 – Display Screen Languages 45

Table 20 – Tip and Sleeve Duty Cycle 63

Table 21 – VAR (variable) Mode of Operation 64

Table 22 – SYNC (synchronize) Mode of Operation . .64

Table 23 – Reusable Components to Keep and Disposable Components to Discard 67

Table 24 – Inspection Criteria and Actions 74

Table 25 – Error Codes, Messages, and Corrective Actions 82

Not Released
Production In Work

1 Introduction

This instructions for use manual contains information intended to ensure the safe, effective, and compliant use of your medical device.

Keep this manual for future reference.

1.1 Audience

This manual is intended for use by trained and licensed surgeons, circulating nurses, scrub technicians, central sterile associates, biomedical equipment technicians, and in-service trainers.

1.2 Conventions

- A **WARNING** indicates a hazardous situation that, if not avoided, could result in death or serious injury.
- A **CAUTION** indicates a hazardous situation that, if not avoided, could result in minor or moderate injury.
- A **NOTE** indicates important information, but is not hazard related. Messages may be related to product damage.

1.3 Contact Information

For additional information, including safety information, in-service training, or current literature, contact your Stryker sales representative or call Stryker Customer Service at 1-800-253-3210. Outside the US, contact your nearest Stryker subsidiary.

NOTE: The user and/or patient should report any serious product-related incident to both the manufacturer and the Competent Authority of the European Member State where the user and/or patient is established.

2 Safety

2.1 System Indications

The Sonopet iQ Ultrasonic Aspirator System is indicated for use in surgical procedures where fragmentation, emulsification, and aspiration of soft and hard tissue is desirable, including neurosurgery, gastrointestinal and affiliated organ surgery, urological surgery, plastic and reconstructive surgery, general surgery, orthopedic surgery, gynecological surgery, thoracic surgery, laparoscopic surgery, and thoracoscopic surgery.*

***NOTE:** For devices approved for sale in the EU market, Australia, and New Zealand markets, the approved indications are as follows:

The Sonopet iQ Ultrasonic Aspirator System is indicated for use in surgical procedures where fragmentation, emulsification, and aspiration of soft and hard tissue is desirable, including neurosurgery, gastrointestinal and affiliated organ surgery, plastic and reconstructive surgery, general surgery, orthopedic surgery, gynecological surgery, and laparoscopic surgery.

NOTE: The Japanese version of the *Indications For Use* statement appears on a package insert for customers in the Japanese market, and may vary due to the content of the Ministry of Health, Labor, and Welfare (MHLW) approval. The Japanese translated equivalent of this IFU states, “See the information provided on the package insert.”

2.2 System Contraindications

This ultrasonic surgical aspirator device is not indicated for and should not be used for the fragmentation, emulsification, and aspiration of uterine fibroids.

Not Released
Production In Work

2.3 Safety Directives

2.3.1 General Safety

- Before using this equipment, or any component compatible with this equipment, read and understand the instructions for use. Pay particular attention to safety information. Become familiar with the equipment before use.
- Equipment is limited to professional use within a professional healthcare environment.
- Only healthcare professionals trained and experienced in the use of this medical device should operate this equipment.
- Healthcare professionals should be thoroughly familiar with the instructions for use, handling characteristics, and the indicated and intended uses of this equipment. Contact your Stryker sales representative or customer service for in-service training.
- The healthcare professional performing any procedure is responsible for determining the appropriateness of this equipment and the specific technique used for each patient. Stryker, as a manufacturer, DOES NOT recommend surgical procedure or technique.

2.3.2 Electrical Safety

WARNING: Take special precautions regarding electromagnetic compatibility (EMC) when using the Sonopet iQ Ultrasonic Aspirator Console and system components. Install and place this medical electrical equipment into service according to the EMC information contained in this manual. Portable and mobile radiofrequency equipment and high frequency (HF) surgical equipment can affect the function of this medical electrical equipment. See *Section 15 Electromagnetic Compatibility.*

2.3.3 Magnetic Resonance (MR) Safety

WARNING: MR UNSAFE - The Sonopet iQ Ultrasonic Aspirator System is MR unsafe. DO NOT use the system in an MR environment. Operating the system outside the specified environmental conditions could result in death or serious injury.

2.3.4 Surgical Procedure Safety

WARNING: Venous air embolism (VAE) and paradoxical air embolism (PAE) have been reported with the use of ultrasonic aspirators during hepatic resection. Use proper precautions when treating patients considered at risk for VAE/PAE complications.

2.3.5 Electrosurgical RF Device Safety

Capacitive coupling may occur when the Sonopet iQ handpiece acts as an antenna for the RF energy emitted when RF device(s), such as monopolar, are in use. The energy absorbed by the Sonopet iQ handpiece may then arc when not in direct contact with tissue or other dispersive surface. This may occur even if activation of the RF device(s) occurs outside of the surgical site and away from the Sonopet iQ handpiece.

WARNING: To reduce risk of thermal injury related to arcing between RF devices and the Sonopet iQ Ultrasonic Aspirator System:

- Follow all industry guidelines for electrosurgical safety to prevent capacitive coupling such as those guidelines published in:
  - SAGES Manual on the Fundamental Use of Surgical Energy (FUSE)
  - Recommendations to Reduce Surgical Fires and Related Patient Injury: FDA Safety Communication
- DO NOT leave the Sonopet iQ handpiece in the surgical site when RF devices are also in use.
- DO NOT leave the Sonopet iQ handpiece in a laparoscopic port when not in use.
- DO NOT leave a Sonopet iQ handpiece on a patient when not in use.
- DO NOT use metal trocars that use plastic components such as plastic anchors. Trocars that contain only metal are preferred due to their ability to disperse stray energy. Trocars that contain only plastic are also acceptable.
- When using RF device(s), adjust the RF power setting to the lowest possible value to achieve the clinically relevant effect.
- When RF device(s) are in use, make sure RF device cords are separated as far as possible from the Sonopet iQ handpiece and Sonopet iQ handpiece cable.

Not Released
Production In Work

3 System Overview

3.1 Components and Interfaces

The Sonopet iQ Ultrasonic Aspirator System (system) consists of reusable and disposable components.

The console, handpiece, foot pedal, and hand controller (optional) are reusable.

Disposable components include an irrigation suction cassette with tubing, a fluid waste suction canister, a collapsible irrigation fluid bag, and a tip and sleeve installed on the handpiece. A sterile drape may also be required if the optional hand controller is used.

The system provides five unique interfaces (Figure 1). The console has a power interface, a control interface, and a sales/service interface. The irrigation suction cassette functions as a fluid management interface. The handpiece with its installed tip and sleeve (applied parts) is used at the patient interface or surgical site. See *Section 16 Glossary.*

An installed tip and sleeve set is identified automatically at the console control interface. The console control interface allows user input and provides user feedback. The console touchscreen and hand controller allow the user to adjust console settings outside the sterile field and inside the sterile field, respectively. The foot pedal is used to activate the handpiece. System status/feedback is provided to the user via the screen display, speaker, and port ring indicators.

User presets may be created and stored in the console. See *Section 16 Glossary.* An import/export function allows data transfer between the console and a data storage device.

The irrigation suction cassette manages fluid flow from the irrigation fluid bag to the surgical site through the handpiece.

Vacuum provided by the console allows the irrigation suction cassette to facilitate the removal of surgical waste/fluid from the surgical site. Surgical waste/fluid is removed at the tip aspiration port and routed through the handpiece to the fluid waste suction canister. See *Section 16 Glossary.*

Not Released
Production In Work

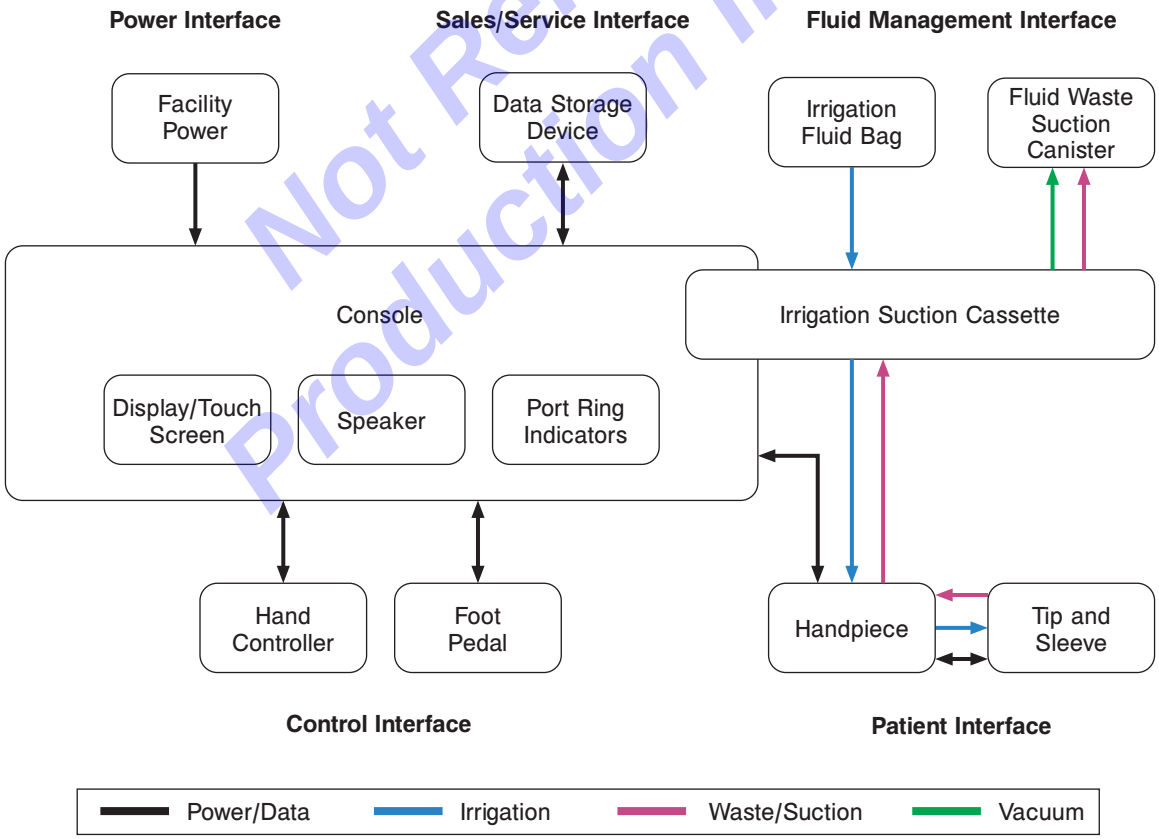

Figure 1 – System Block Diagram

3.2 Operation

The ultrasonic aspirator system is designed to fragment, emulsify, and aspirate (suction) tissue using a handpiece with a vibrating tip (Figure 2).

The handpiece converts electrical power to ultrasonic power (vibration) that is transferred to and amplified by the installed tip. The tip expands and contracts along its length, vibrating to and from the target tissue. The vibrating tip end ruptures or fragments the target tissue (Figure 3).

The handpiece delivers irrigation fluid coaxially around the tip through a sleeve to the tip end (Figure 2). The irrigation fluid helps to emulsify the fragmented target tissue and keeps the tip cool.

The handpiece removes the fragmented, emulsified tissue and irrigation fluid from the surgical site via the tip's aspiration port (Figure 4). Depending on the application, not all tips have an aspiration port. Handpiece suction is provided through the irrigation suction cassette tubing and originates from a vacuum pump inside the console.

Pulse Control (optional) is an additional control which pulses the ultrasonic energy of the tip. Increasing the Pulse Control setting reduces the ultrasonic dose delivered at the tip. To activate the additional control, see *Section 1.3 Contact Information* to request activation.

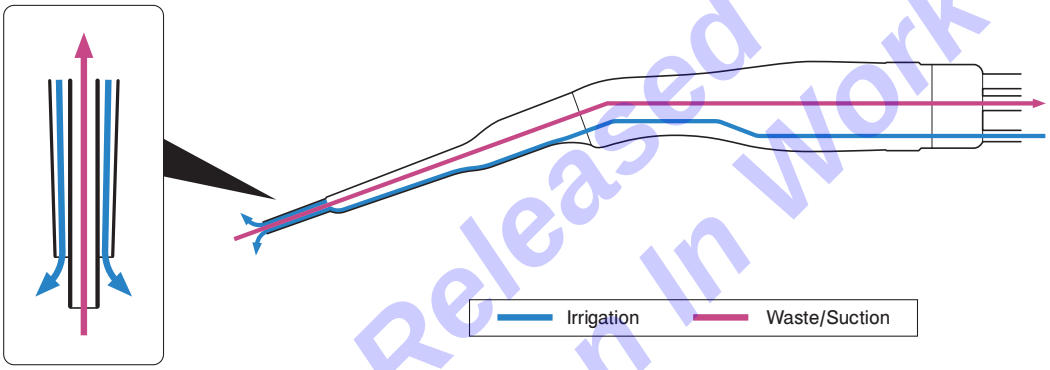

Figure 2 – Handpiece Irrigation/Suction Flow Diagram

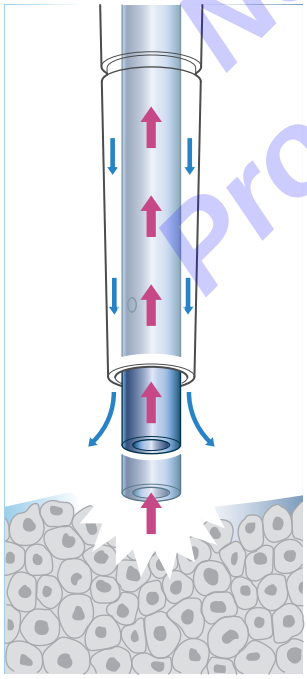

Figure 3 – Soft Tissue Fragmentation

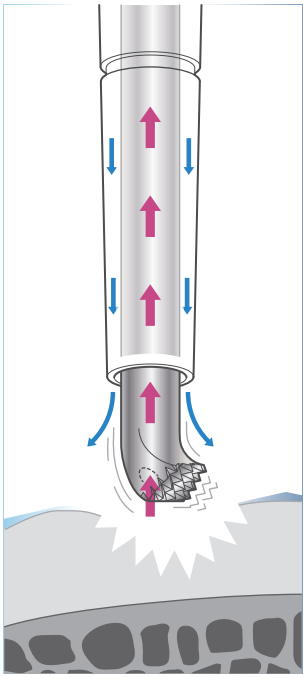

Figure 4 – Hard Tissue Fragmentation

Not Released
Production In Work

3.3 For Use With

WARNINGS:

- Use only Stryker-approved electronic components and accessories. Failure to comply may result in degraded performance, increased electromagnetic emissions or decreased electromagnetic immunity of the system. See *Section 15 Electromagnetic Compatibility.*
- Use only Stryker-approved components and accessories. Failure to comply may result in injury or equipment incompatibility.

Table 1 – Components, Accessories, and Replacement Parts

DESCRIPTION	REF
One Console - required	
Sonopet iQ Ultrasonic Aspirator Console	5500-050-000
One Handpiece - required (applied part)	
Sonopet iQ Universal Angled Handpiece	5500-255-000
One Disposable Tip and Sleeve - required (applied part)	

NOTES:

- Various tip head geometries and tip lengths are available to remove specific tissue types.
- Use the name and part number information on the tip and sleeve label to select the appropriate tip and sleeve set.

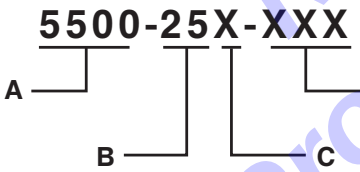

A	Product Family
B	Handpiece Type (kHz)
C	Tissue Type, B=Bone, S=Soft including Fibrous
D	Tip Series

DESCRIPTION	REF
One Torque Wrench - required	
7 mm Step Torque Wrench	5450-800-039
One Disposable Cassette - required	
Sonopet iQ Irrigation Suction Cassette (includes disposable cleaning wire)	5500-573-000
One Foot Pedal - required	
Sonopet iQ Basic Foot Pedal	5500-006-000
Sonopet iQ Advanced Foot Pedal	5500-007-000
Sonopet iQ Wireless Advanced Foot Pedal	5500-008-000
One Disposable Fluid Waste Suction Canister - required	
Suction Canister	5450-851-012
One Disposable Irrigation Fluid Container - required	
Collapsible Irrigation Fluid Container (bag)	Commercially available
Optional Accessories/Replacement Parts	
Power Cord (console)	0996-851-XXX
Blu62® Instrument Detergent	3000-00X-000 series
Irrigation Pole (console)	5100-050-028
Cleaning Wire (reusable)	5450-800-276
Sonopet Cart	5450-850-410
Sonopet iQ Wireless Receiver	5500-008-300
Sonopet iQ Hand Controller	5500-402-000
Sterile Drape (4 pack)	5500-472-000
Sonopet iQ Sterilization Tray	5500-800-278
Aesculap Rigid Sterilization Lid	7102-553-030
Aesculap Rigid Sterilization Base	7102-653-020
Fuses (2)	See *Section 14.1 Console Specifications* for fuse rating information.
Alkaline Batteries AA (2)	*See Section 14.8 Foot Pedal(s) and Wireless Receiver Specifications.*

NOTE: For a complete list of components, accessories, and replacement parts or ordering and market availability information, contact your Stryker sales representative or customer service. See *Section 1.3 Contact Information*. Outside the US, contact your nearest Stryker subsidiary.

Not Released Production In Work

3.4 Intended Use

3.4.1 Handpiece

The Sonopet iQ Universal Angled Handpiece (handpiece) is a reusable device intended for use with the Sonopet iQ Ultrasonic Aspirator Console (console). The handpiece converts the electrical energy it receives from the console into mechanical ultrasonic energy which is transferred to the tip.

The handpiece delivers ultrasonic energy, sterile irrigation fluid, and aspiration to the surgical site. The handpiece, when used with an appropriate tip and sleeve set, is intended for use in surgical procedures where fragmentation, emulsification, and aspiration of soft tissue and hard tissue is desirable.

3.4.2 Tip and Sleeve

A tip and sleeve set, when used with the appropriate Sonopet iQ handpiece, is intended for use in surgical procedures where fragmentation, emulsification, and aspiration of tissue is desirable.

Tip and sleeve sets intended for soft tissue may be used in surgical procedures including neurosurgery, gastrointestinal and affiliated organ surgery, urological surgery, general surgery, gynecological surgery, thoracic surgery, laparoscopic surgery, and thoracoscopic surgery.

Tip and sleeve sets intended for hard tissue may be used in surgical procedures including neurosurgery, plastic and reconstructive surgery, and orthopedic surgery.

A Sonopet iQ tip and sleeve set, when used with the appropriate Sonopet iQ handpiece, amplifies and delivers ultrasonic energy to the target tissue. A tip may also allow for the removal of surgical waste from the surgical site using suction. The sleeve allows for the delivery of sterile irrigation fluid to the surgical site.

3.4.3 Irrigation Suction Cassette

The Sonopet iQ Irrigation Suction Cassette (tubing set) is a single-use disposable device intended for use with the Sonopet iQ Ultrasonic Aspirator console to deliver sterile irrigation fluid to the surgical site and aspirate fluids or fragmented tissue from the surgical site.

3.4.4 Foot Pedal

The Sonopet iQ Foot Pedal (foot pedal) is a reusable device intended for use with the Sonopet iQ Ultrasonic Aspirator console. The foot pedal is used to communicate start and stop commands to a Sonopet iQ handpiece that delivers ultrasonic energy, irrigation, and aspiration to the surgical site.

The wireless receiver, used with the wireless foot pedal, wirelessly communicates start and stop commands to a Sonopet iQ handpiece. See *Table 1 Components, Accessories, and Replacement Parts.*

3.4.5 Hand Controller

The Sonopet iQ Hand Controller (hand controller) is a reusable device intended for use with the Sonopet iQ Ultrasonic Aspirator console.

The hand controller is an optional accessory used to control console settings inside the sterile field (away from the console) when used with a sterile drape. Setting levels that may be controlled include ultrasonic power, irrigation, and aspiration. The hand controller may also be used to initiate an irrigation flush of the tip and sleeve. The optional Pulse Control (requires activation) settings must be adjusted from the console touchscreen.

Not Released
Production In Work

4 Features

4.1 Component Interfaces

4.1.1 Console Front Panel

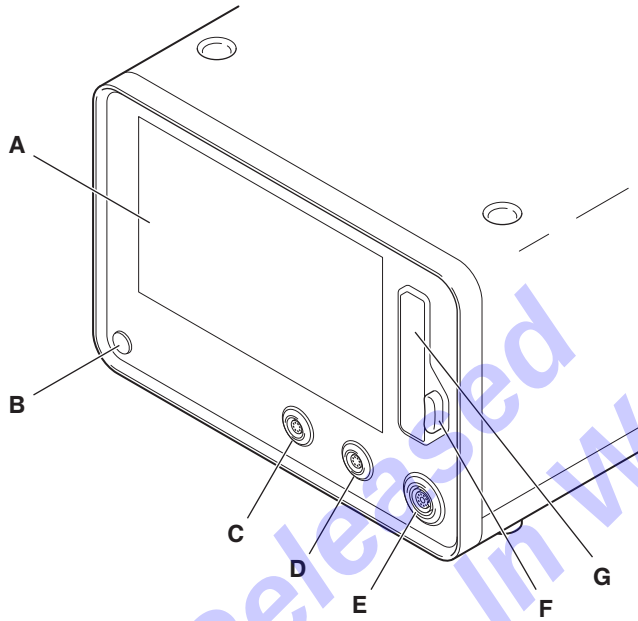

Figure 5 – Console Front Panel Features

A	**Display Screen** – Provides the control interface via a color, touch-sensitive screen to select settings, enter data, and view status. The display screen provides operational status and pop-up messages. See *Section 4.2.2.1 Home/Preset Edit Screen.*
B	**Power Button** – Allows the console to be ready to use (green) or in a standby (amber) power mode. See *Section 6.2.1.1 To Connect Console Power.*
C	**Hand Controller Port and Port Ring Indicator** – Allows for the installation of the hand controller. The port ring indicator provides a connection status, including a successful connection, no connection, or an error condition. See *Section 6.2.6 To Connect the Hand Controller (Optional).*
D	**Foot Pedal Port and Port Ring Indicator** – Allows for the installation of a foot pedal. The port ring indicator provides a connection status, including a successful connection, no connection, or an error condition. See *Section 6.2.2 To Connect the Foot Pedal.*
E	**Handpiece Port and Port Ring Indicator** – Allows for installation of the handpiece. The port ring indicator provides a connection status, including a successful connection, no connection, or an error condition. See *Section 6.2.3.2 To Connect the Handpiece to the Console (Outside Sterile Field).*
F	**Eject Button** – Allows for the removal of the irrigation suction cassette from the console. See *Section 6.4.2.4 To Disconnect and Dispose of the Irrigation Suction Cassette.*
G	**Irrigation Suction Cassette Receptacle** – Allows for the installation of the irrigation suction cassette into the console. See *Section 6.2.4.2 To Connect the Suction Canister, Cassette, and Irrigation Tubing (Outside Sterile Field).*

Not Released
Production In Work

4.1.2 Console Back Panel

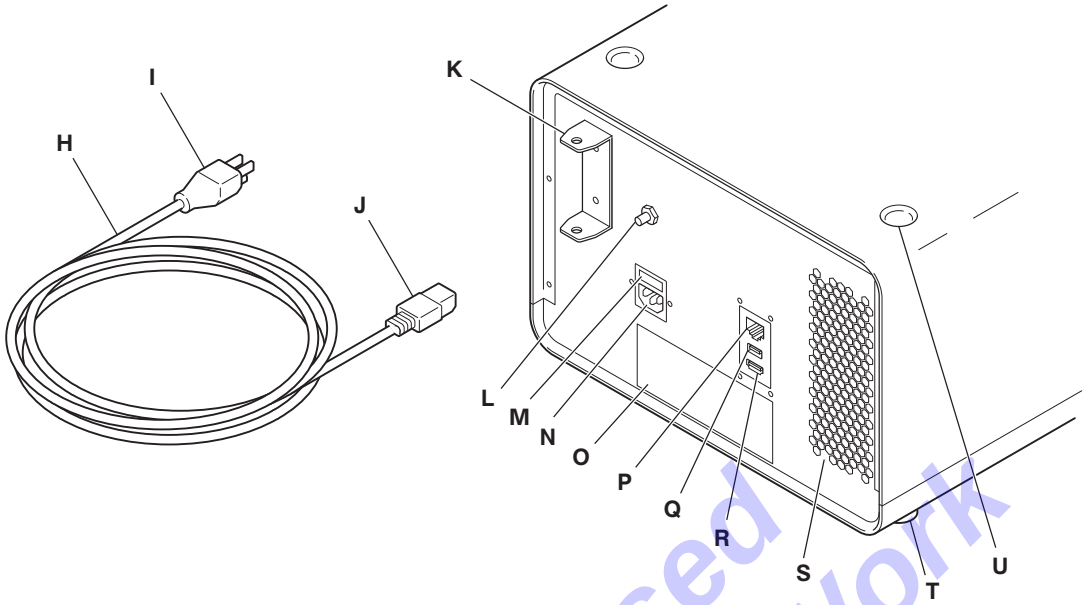

Figure 6 – Console Back Panel Features

H	**Power Cord** – Provides the electrical connection between the console and facility power. See *Section 6.2.1.1 To Connect Console Power.*
I	**Power Cord Plug** – Allows for the installation of the power cord into a hospital-grade electrical power receptacle. See *Section 14.2 Power Cord Specifications (general).*
J	**Power Cord Connector** – Allows for the installation of the power cord into the console power cord receptacle.
K	**Irrigation Pole Bracket** – Allows for the installation of the Irrigation pole used to hold the collapsible irrigation bag. See *Section 6.1.2 To Perform Initial Installation.*
L	**Equipotential Grounding Lug** – Provides for the connection of a equipotential ground. The grounding lug shall not be used as a protective earth connection. See *Section 6.2.1 To Prepare the Console.*
M	**Fuse Receptacle** – Allows for the installation of fuses. See *Section 12 Service.*
N	**Power Cord Receptacle** – Allows for the installation of the power cord connector.
O	**Specification Label** – Contains model, part number, and serial number information. See *Table 12 IEC 60417 Graphical symbols for use on equipment.*
P	**Network Receptacle** – Disabled; network access is provided to Stryker service personnel only. See *Section 12 Service.*
Q	**Data Storage Device Receptacle** – Disabled; data storage access is available to Stryker service personnel only. See *Section 12 Service.*
R	**Video Out Receptacle** – Provides an interface to allow for the connection of a computer monitor, video projector, or digital television. A one meter HDMI cable is recommended. For technician use only.
S	**Vent Holes** – Permit circulation of air and help to keep the console cool. Also located on the underside of the console. See *Section 6.1.2 To Perform Initial Installation.*
T	**Stacking Feet (4)** – Provides console stability and allows for secure stacking of Stryker equipment if necessary.
U	**Stacking Inserts (4)** – Allows for stacking feet placement and facilitates secure stacking of Stryker equipment if necessary (22.7 kg [50 lb] limit). See *Section 15 Electromagnetic Compatibility.*

Not Released Production In Work

4.1.3 Handpiece

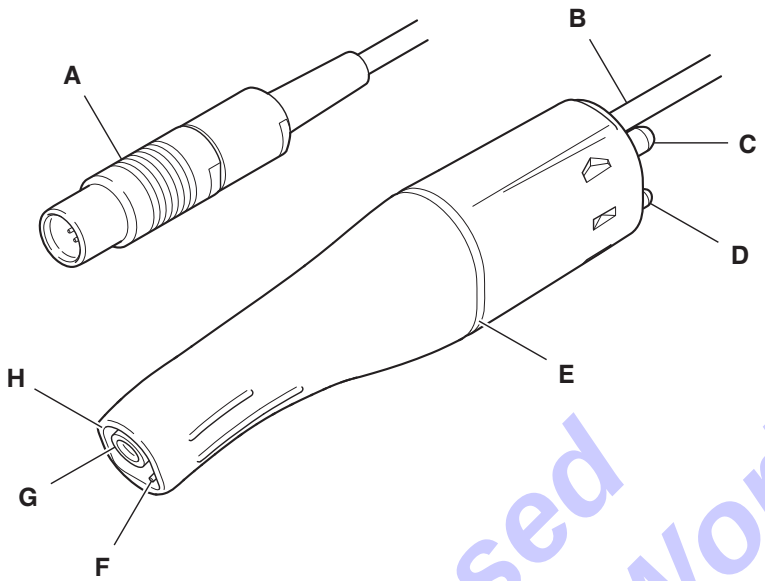

Figure 7 – Handpiece Features

A	**Connector** – Provides the electrical connection to the console. The connector is also marked with GTIN information, the part number, and the serial number. See *Table 4 Handpiece Product Mark(s).*
B	**Cable** – Provides the electrical/data connection between the handpiece and the console.
C	**Suction Port** – Provides the suction connection to the irrigation suction cassette via the handpiece tubing connector.
D	**Irrigation Port** – Provides the irrigation fluid connection to the irrigation suction cassette via the handpiece tubing connector.
E	**Color Ring** – identifies the handpiece type. See *Table 14 Handpiece Color(s).*
F	**Irrigation Lumen** – Provides irrigation fluid to the sleeve and tip end.
G	**Tip Interface** – Allows the tip to be installed into the handpiece body. See *Section 6.2.3.4 To Install a Tip and Sleeve on the Handpiece.*
H	**Sleeve Interface** – Allows the sleeve to be installed into the handpiece body. See *Section 6.2.3.4 To Install a Tip and Sleeve on the Handpiece.*

Not Released Production In Work

4.1.4 Tip and Sleeve

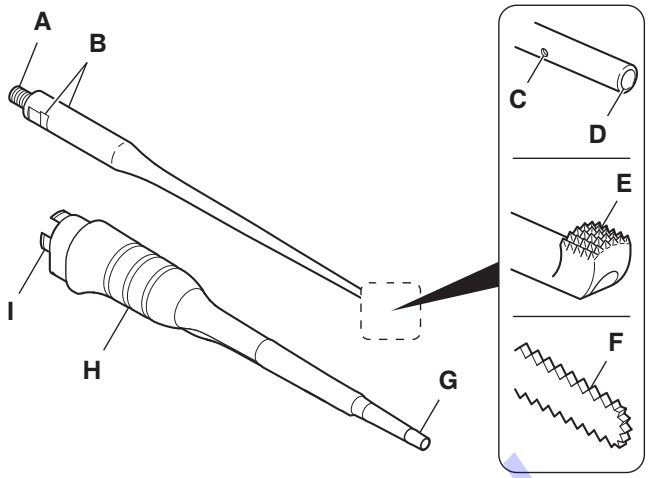

Figure 8 – Tip and Sleeve Features

A	**Tip Threads** – Allows the tip to be threaded into the handpiece body. See *Section 6.2.3.4 To Install a Tip and Sleeve on the Handpiece.*
B	**Tip Flats** – Allows placement of the torque wrench head onto the tip during installation. See *Section 6.2.3.4 To Install a Tip and Sleeve on the Handpiece.*
C	**Pre-aspiration Hole** – Facilitates cooling of the tip via aspiration (suction) of irrigation fluid through the tip lumen.
D	**Tip Aspiration (suction) Port** – Provides aspiration of surgical waste from the surgical site.
E	**Tip Head Geometry (Applied Part)** – Facilitates the removal of target tissue. Varies based on the selected tip type and surgical application.
F	**Tip Head Geometry (No Aspiration Port)** – Facilitates the removal of target tissue. Suction will not be available when using a tip without an aspiration port. See *Section 6.2.3.5 To Confirm a Tip and Sleeve Installation.*
G	**Sleeve Frangible Section (Optional Removal)** – Identifies a breakable or removable section of the sleeve if available. See *Section 6.2.3.4.1 To Remove the Frangible Section of a Tip Sleeve (optional).*
H	**Sleeve Adaptor** – Facilitates grasping the installed sleeve on the handpiece.
I	**Handpiece Interface** – Allows the sleeve to be installed into the handpiece body. See *Section 6.2.3.4 To Install a Tip and Sleeve on the Handpiece.*

Not Released
Production In Work

4.1.5 Irrigation Suction Cassette

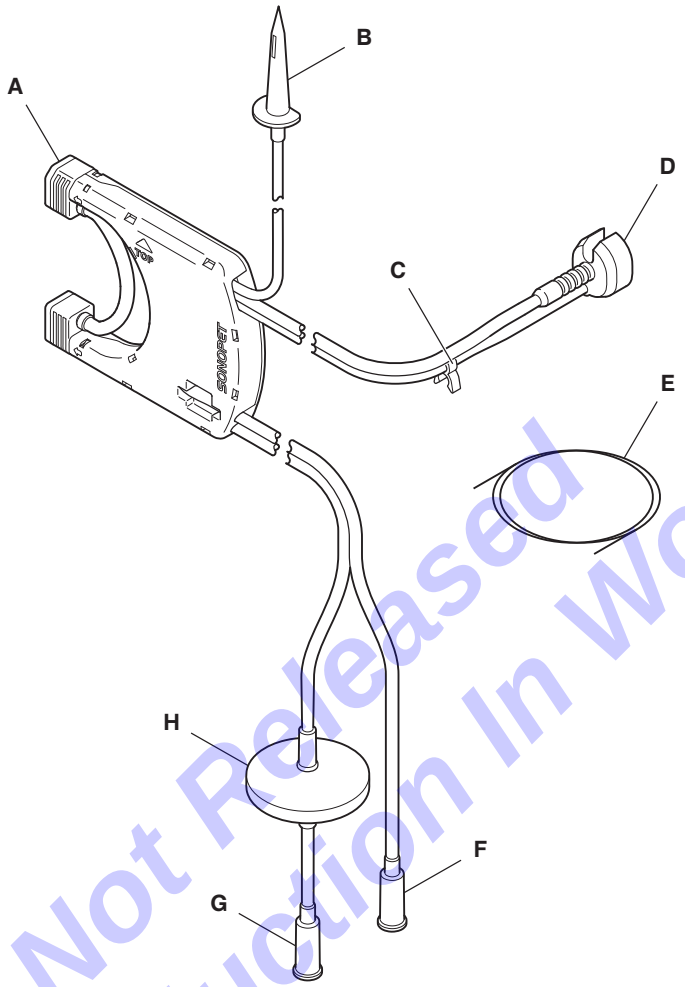

Figure 9 – Irrigation Suction Cassette Features

A	**Cassette** – Provides fluid management for the system and is installed into the console. See *Section 6.2.4 To Install the Irrigation Suction Cassette.*
B	**Irrigation Fluid Container Tubing with Spike** – Provides the cassette irrigation tubing connection to the irrigation bag/collapsible bottle.
C	**Handpiece Cable Clips (4)** – Provides a means to secure the handpiece cable to the tubing.
D	**Handpiece Tubing Connector** – Provides connection to the handpiece to deliver suction (vacuum) to the tip and sterile irrigation fluid to the sleeve. See *Section 6.2.4.3 To Connect the Handpiece Tubing Connector (Inside Sterile Field).*
E	**Disposable Cleaning Wire** – Used to clear a clogged tip during handpiece use. See *Section 6.3.6 To Clear a Clogged Tip.*
F	**PATIENT Canister Tubing with Connector** – Provides the cassette suction tubing connection to the suction canister PATIENT port. See *Table 7 Irrigation Suction Cassette Product Mark(s).*
G	**VACUUM Suction Canister Tubing with Connector** – Provides the cassette suction tubing connection to the suction canister VACUUM port. See *Section 6.2.4.2 To Connect the Suction Canister, Cassette, and Irrigation Tubing (Outside Sterile Field).*
H	**VACUUM (hydrophobic) Filter** – Prevents inadvertent surgical waste from entering the console due to a suction canister connection error.

Not Released Production In Work

4.1.6 Basic Foot Pedal

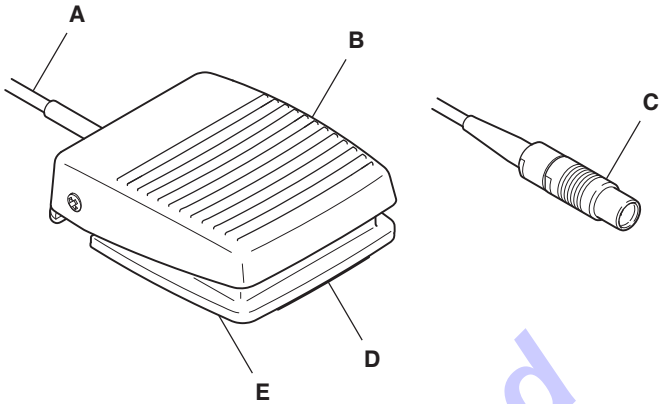

Figure 10 – Basic Foot Pedal Features

A	**Cable** – Provides the hard wired transmission of information and power between the foot pedal and the console.	**C**	**Connector** – Allows the electrical/data connection to the console. See *Table 8 Foot Pedal(s) Product Mark(s).*
B	**Treadle** – When pressure is applied to the treadle, handpiece activation occurs and ultrasonic power is applied at the tip. See *Section 6.3.1 To Operate the Handpiece.*	**D**	**Specification Label** – Provides unique device identification including part number and serial number information.
		E	**Base** – Provides stabilization.

Not Released
Production In Work

4.1.7 Advanced and Wireless Advanced Foot Pedals

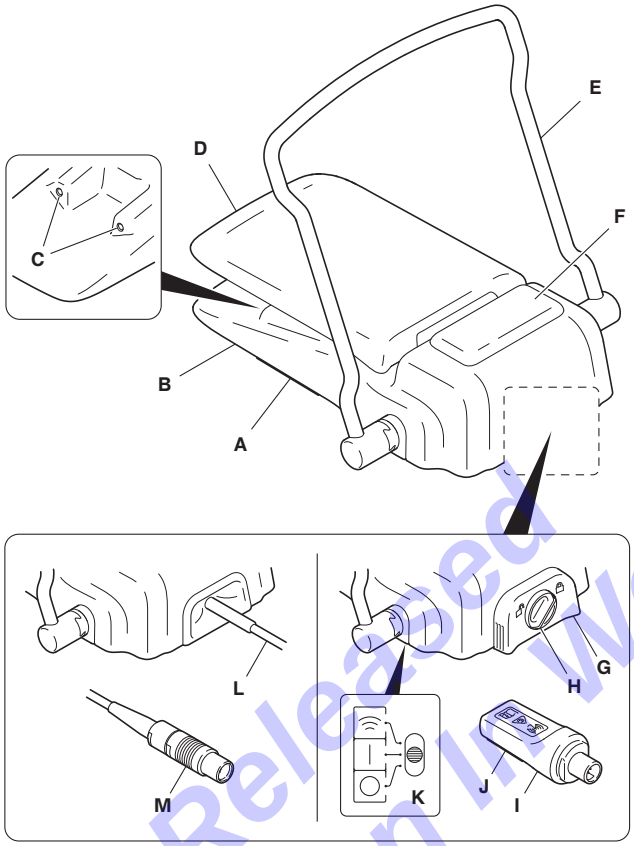

Figure 11 – Advanced and Wireless Advanced Foot Pedal Features

A	**Specification Label** – Provides unique device identification including the GTIN information, the part number, and the serial number. See *Table 8 Foot Pedal(s) Product Mark(s).*
B	**Base** – Provides stabilization and includes six rubber feet that prevent slipping and skidding.
C	**Indicator Lamps (2)** – Provides illumination of the foot pedal location and indicates status of battery power and wireless pairing. See *Section 6.2.2 To Connect the Foot Pedal.*
D	**Treadle** – When pressure is applied to the treadle, handpiece activation occurs and ultrasonic power is applied at the tip. See *Section 6.3.1 To Operate the Handpiece.*
E	**Toe Loop** – Provides the ability to reposition the foot pedal by inserting foot into the loop, lifting the foot pedal, and moving the foot pedal to a new location on the floor.
F	**Irrigation Flush Button** – When pressure is applied, the button activates irrigation flow to the tip. See *Section 6.3.2 To Flush the Irrigation Tubing.*
G	**Battery Compartment Door** – Allows installation of two AA alkaline batteries (not supplied) to provide internal power for the wireless foot pedal. See *Section 6.1.10.1 To Install or Replace the Batteries (Wireless Advanced Foot Pedal Only).*
H	**Battery Compartment Door Knob** – Allows the locking and unlocking of the battery compartment door.
I	**Wireless Receiver** – Provides the wireless transmission of information between the foot pedal and the console.
J	**Specification Label** – Provides unique device identification including the GTIN information, the part number and the serial number.
K	**WIRELESS/ON/OFF Power Switch** – Allows power ON (or OFF) and activates (or deactivates) a wireless connection to the console. See *Section 6.2.2 To Connect the Foot Pedal.*
L	**Cable** – Provides the hard wired transmission of information and power between the foot pedal and the console.
M	**Connector** – Provides the electrical/data connection to the console.

Not Released Production In Work

4.1.8 Hand Controller

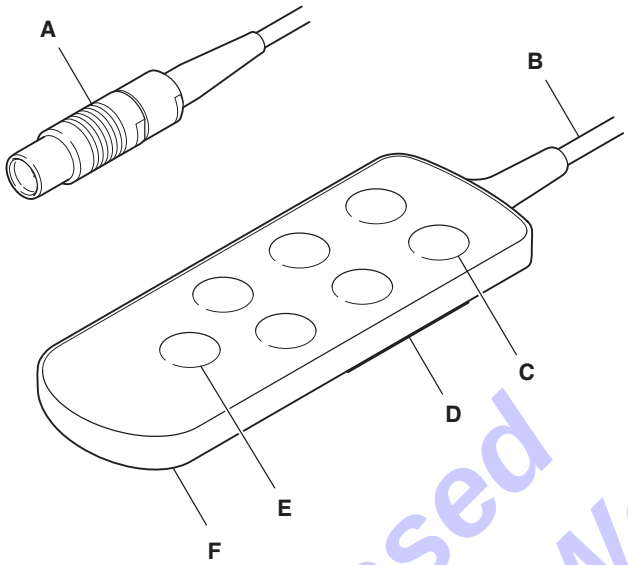

Figure 12 – Hand Controller Features

A	**Connector** – Provides the electrical connection to the console. The connector is also marked with GTIN information, the part number, and the serial number. See *Section 6.2.6 To Connect the Hand Controller (Optional).*
B	**Cable** – Provides the hard wired transmission of information and power between the hand control and the console.
C	**Adjustment Control Buttons (6)** – When pressure is applied, the buttons increase (+) or decrease (-) power, suction, or irrigation. See *Table 9 Hand Controller Product Mark(s).* The optional Pulse Control (requires activation) settings must be adjusted from the console touchscreen.
D	**Specification Label** – Provides unique device identification including part number and serial number information.
E	**Prime/Flush Button** – When pressure is applied, the button activates an irrigation flush to the tip. See *Section 6.3.2 To Flush the Irrigation Tubing.*
F	**Housing Body** – Allows hand-held control of console settings, including ultrasonic power, suction, and irrigation within a sterile field when placed inside a sterile drape. See *Table 1 Components, Accessories, and Replacement Parts.*

Not Released Production In Work

4.2 Software Interface(s)

4.2.1 Console Menu Structure

The HOME screen provides access to procedural controls and preset(s), including a DEFAULT preset (Figure 13). See *Section 16 Glossary.* The HOME screen controls include POWER, SUCTION (aspiration), and IRRIGATION. The bar at the bottom of the HOME screen displays the selected preset and provides access to PRESET management functions and system SETTINGS.

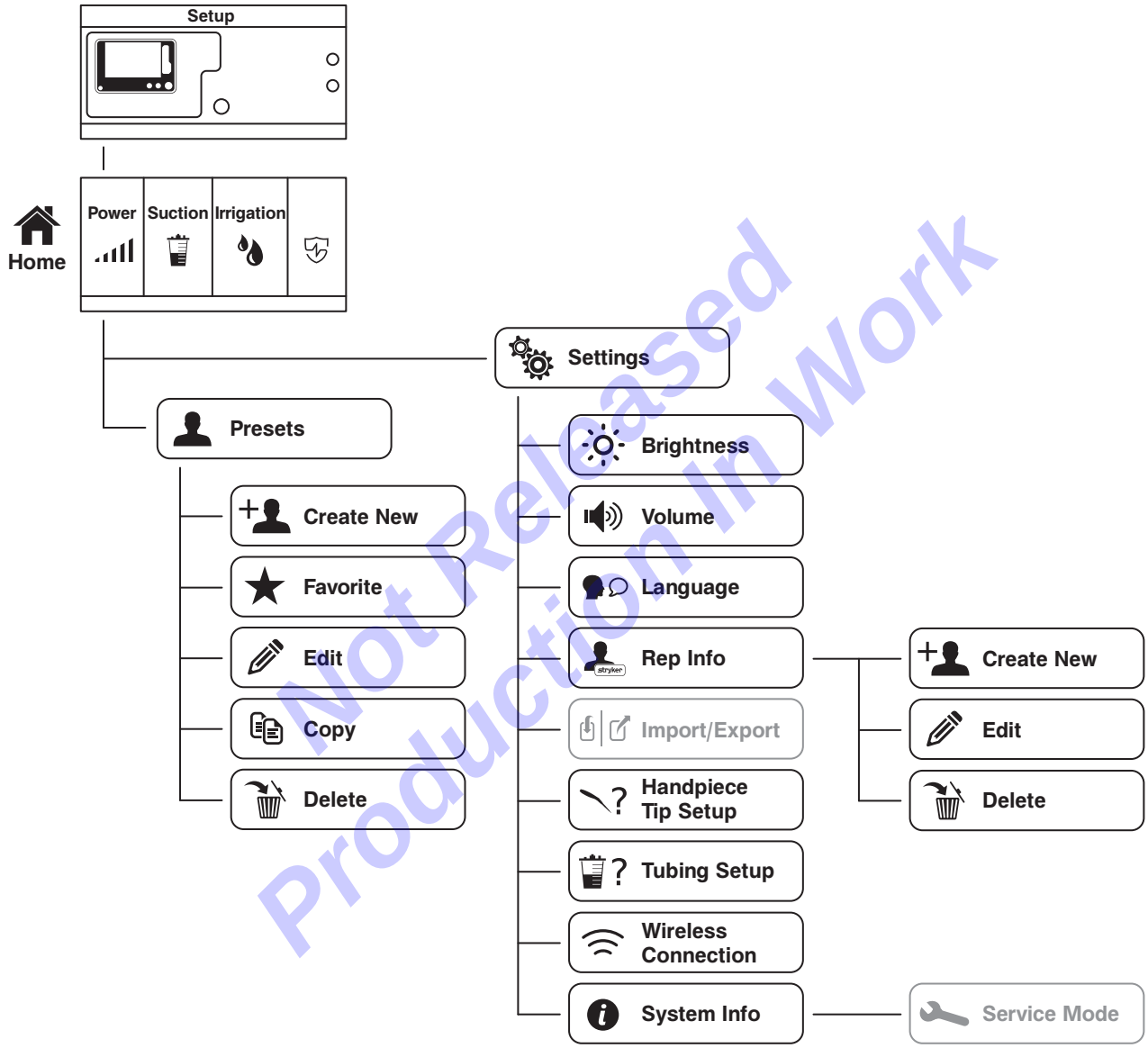

Not Released Production In Work

Figure 13 – Menu Structure

4.2.2 Screens and Pop-ups

The *Screens and Pop-ups* section describes the functional areas of the HOME screen (Figure 14), typical preset screens (Figure 15, Figure 16), a SETTINGS screen (Figure 17), a SYSTEM SETUP screen (Figure 18), a component SETUP screen (Figure 19), and typical pop-ups. Pop-ups include error messages (Figure 20), confirmation messages (Figure 21), and notification messages (Figure 22). See *Section 16 Glossary.* Functional areas of screens facilitate the entering of values and the selection of presets, modes of operation, and system settings.

4.2.2.1 Home/Preset Edit Screen

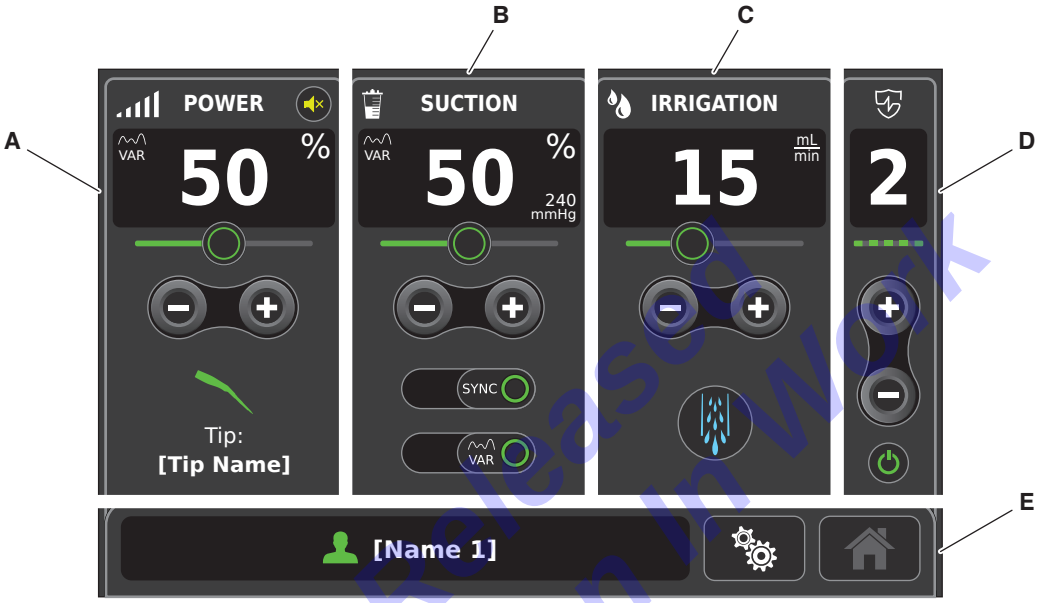

Figure 14 – Home Screen

A	**Power Control Area** – The area displays the value of ultrasonic power (percentage) at the tip of the handpiece. Handpiece power may be adjusted from 0% to 100%. Power may be adjusted using a slider bar (10% increments) or PLUS/MINUS buttons (1% or 5% increments). An audible HANDPIECE POWER INDICATOR MUTE button is available. A variable mode status indicator is also present. The name of the connected tip is indicated.
B	**Suction Control Area** – The area displays the value of suction (percentage) at the tip of the handpiece. Handpiece suction may be adjusted from 0% to 100%. The maximum potential suction is indicated in millimeters of mercury. Handpiece suction may be adjusted using a slider bar (10% increments) or PLUS/MINUS buttons (1% or 5% increments). Two selectable mode buttons are also available, including SYNC (synchronize) and VAR (variable). See *Section 16 Glossary.* A variable mode status indicator is also present.
C	**Irrigation Control Area** – The area displays the rate of irrigation flow (3 to 40 mL/min for soft tissue, 5 to 40 mL/min for hard tissue) at the end of the tip sleeve. Irrigation flow may be adjusted using a slider bar (5 mL/min increments) or PLUS/MINUS buttons (1 mL/min increments). An irrigation FLUSH button is available. The irrigation flow rate of INITIAL PRIME and irrigation FLUSH is 60 mL/min.
D	**Pulse Control Area (optional)** – The area, when activated and enabled, displays the Pulse Control setting (1 to 5) and Pulse Control indicator of the ultrasonic energy delivered. The setting may be adjusted using the PLUS/MINUS buttons. Pulse Control option may be disabled using the Ready/Stand-by button.
E	**Title/Navigation/Response Bar Area** – The area displays the selected preset name and the name of the installed tip. The PRESET roll-up button, system SETTINGS button and HOME button allow navigation to other screens.

Not Released Production In Work

4.2.2.2 Preset/Settings Management Screen

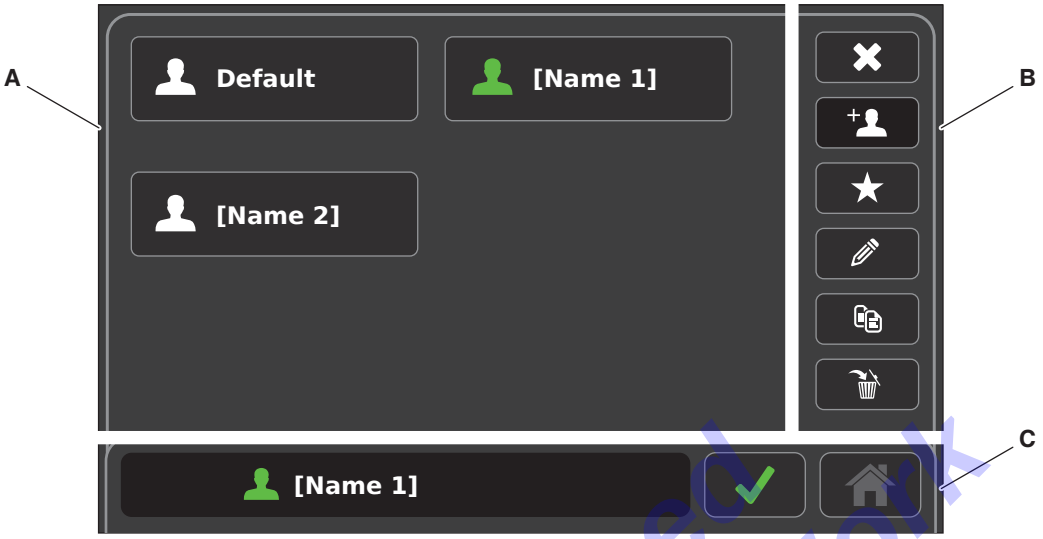

Figure 15 – Preset Screen

A	**Selection Area** – The area displays selectable, customer-created presets or contact information.
B	**Options Menu Area** – The area provides buttons used to manage customer-created presets or contacts. Information may be created, selected, copied, edited or deleted.
C	**Title / Navigation / Response Bar Area** – The area displays the name of a preset or workflow screen. The PRESET roll-up button, system SETTINGS button, and HOME button allow navigation to other screens.

Not Released Production In Work

4.2.2.3 Data Entry Screen

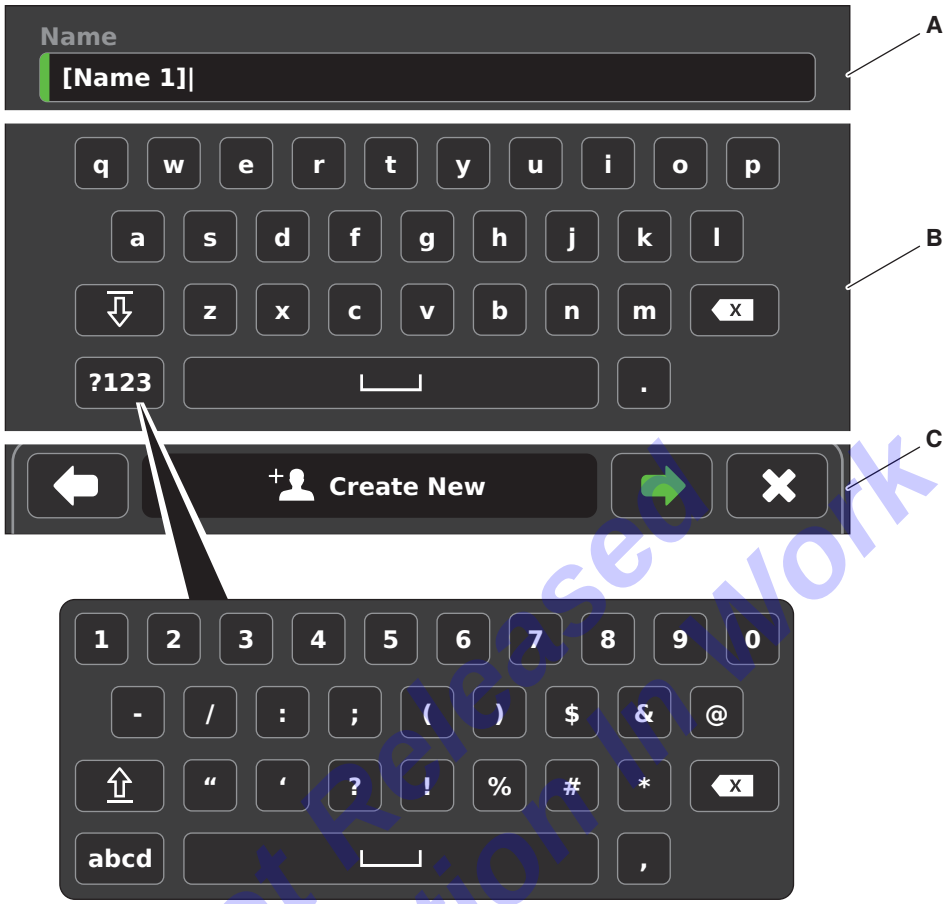

Figure 16 – Keyboard Screen - Create New Preset Workflow

A	**Data Entry Area** – The area allows entry of character information. Character information may include the name of a preset or contact information.
B	**Keyboard Area** – The area provides a keyboard to enter character and symbol information into the data entry area.
C	**Title/Navigation/Response Bar Area** – The area displays the name of a preset or current task. Buttons are provided to navigate to other screens or confirm actions.

Not Released Production In Work

4.2.2.4 Settings Screen

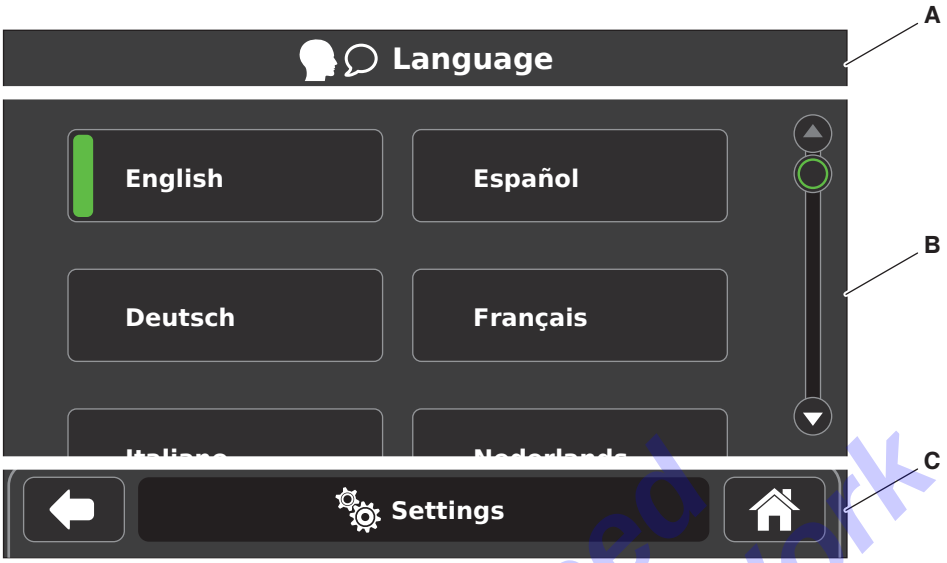

Figure 17 – Settings Screen

A	**Title Area** – The area identifies the selected system SETTINGS screen.
B	**Adjustment / Selection / Information Area** – The area provides selectable system options, adjustments, and information based on the selection.
C	**Title/Navigation/Response Bar Area** – The area displays the name of the screen. Buttons are provided to navigate to other screens.

Not Released
Production In Work

4.2.2.5 System Setup Screen

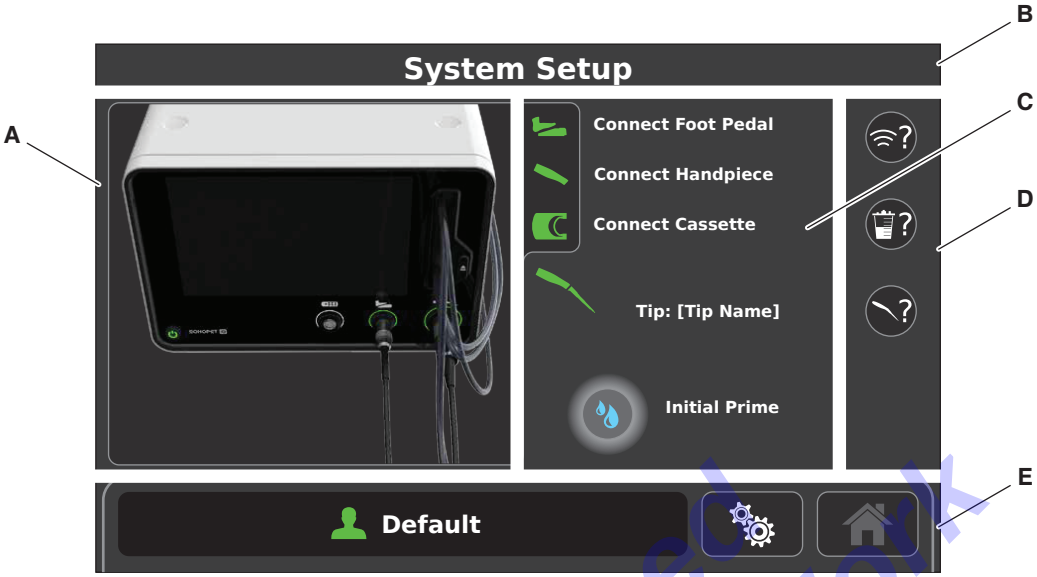

Figure 18 – System Setup Screen

A	**Instruction Area** – The area displays an animation of how to install various components.
B	**Title Area** – The area identifies the name of the screen.
C	**Status / Initial Priming Area** – The area displays the connection status of the foot pedal, handpiece, irrigation suction cassette, and the tip. See *Table 13 Console Color Indicators.* An INITIAL PRIME button appears after all the compatible components are setup successfully.
D	**Help Area** – The area displays help buttons to provide access to component setup instructions. See *Section 4.2.2.6 Component Setup Screen.*
E	**Title / Navigation Bar Area** – The area displays the selected preset name. The PRESET roll-up button and system SETTINGS button allow navigation to other screens. After SYSTEM SETUP is complete, the HOME screen will appear.

Not Released
Production In Work

4.2.2.6 Component Setup Screen

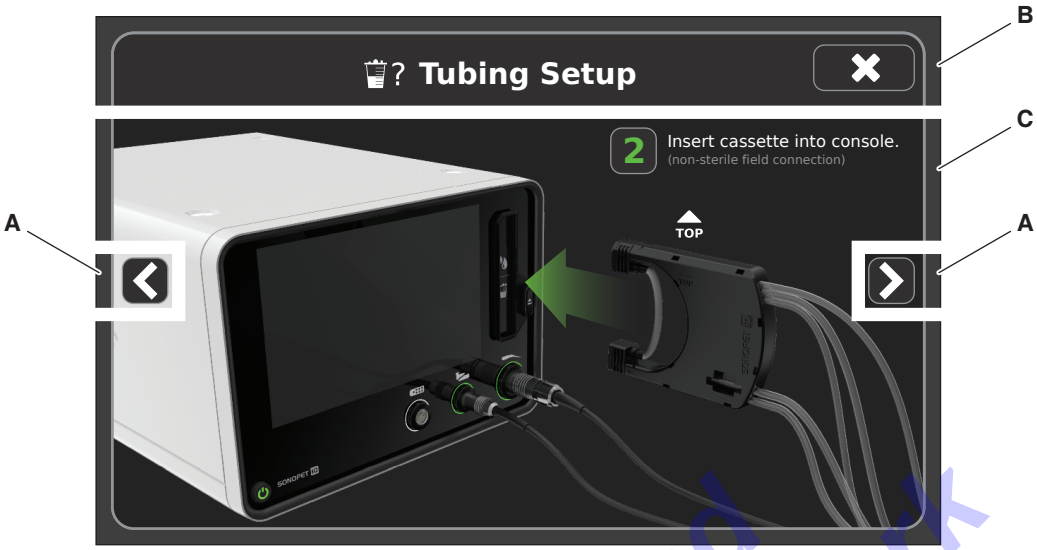

Figure 19 – Cassette Tubing Setup Screen

A	**Navigation Area** – The area provides NEXT and PREVIOUS buttons to navigate between screens.
B	**Title Area** – The area identifies the specific component SETUP screen. Also includes a CLOSE button to exit.
C	**Instruction Area** – The area displays static illustrations of how to correctly install various components.

Not Released
Production In Work

4.2.2.7 Pop-ups

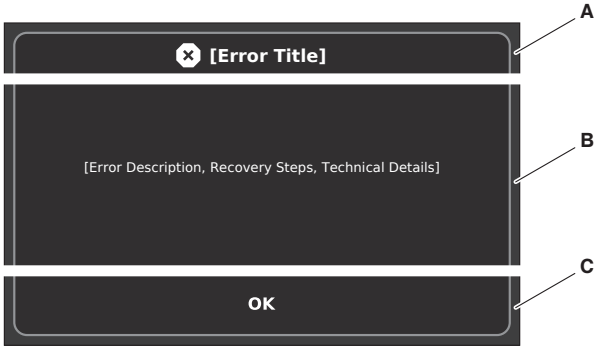

Figure 20 – Error Message Pop-up

A	**Title Area** – The area provides the name or type of error message. See *Section 16 Glossary.*
B	**Description Area** – The area provides an error code, an error message, and recommended action(s) to recover. To respond to error messages, see *Section 11 Pop-up Codes, Messages, and Corrective Actions.*
C	**Response Area** – The area contains an OK button and may contain the SETTINGS button to provide assistance. A WIRELESS button may also appear to assist in resolving a wireless foot pedal error. The error message will remain open until resolved.

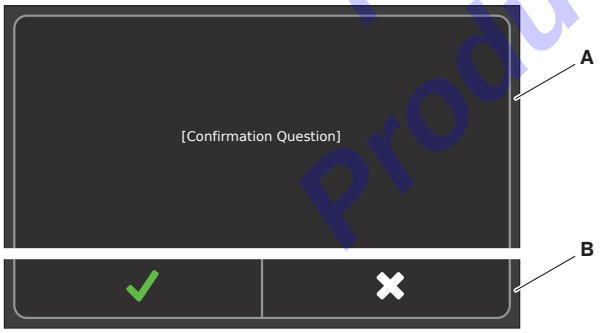

Figure 21 – Confirmation Message Pop-up

A	**Description Area** – The area provides information that requires action.
B	**Response Area** – The area provides a CONFIRM button and a CANCEL button.

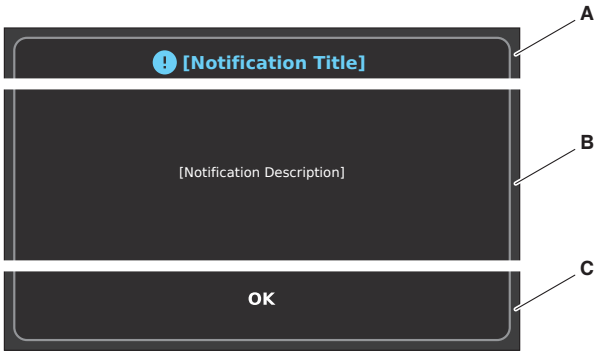

Figure 22 – Notification Message Pop-up

A	**Title Area** – The area provides the name or type of notification message.
B	**Description Area** – The area provides system status that requires action.
C	**Response Area** – The area contains an OK button and may contain the SETTINGS button to provide assistance.

Not Released Production In Work

4.2.3 Buttons

The *Buttons* section describes each unique screen display button and console button.

Table 2 – Button Functions

BUTTON	NAME	FUNCTION
	BACK	Touch to access the previous screen. See *Section 4.2.2.3 Data Entry Screen.*
	BACKSPACE	Touch to delete a previous keyboard entry. See *Section 4.2.2.3 Data Entry Screen.*
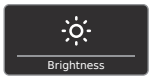	BRIGHTNESS	Touch to access the BRIGHTNESS adjustment screen. See *Section 6.1.3.1 To Adjust Brightness.*
	BRIGHTNESS LINKED	Indicates the brightness adjustment will apply to the display screen and the port ring indicators.
	BRIGHTNESS UNLINKED	Indicates the brightness adjustment of the display screen and the port ring indicators are performed separately.
	CANCEL/ CLOSE	Touch to exit, close, or cancel an action. See *Section 4.2.2.6 Component Setup Screen.*
	TUBING SETUP	Touch to access the irrigation suction cassette TUBING SETUP screens. See *Section 6.1.4.2 To Access Tubing Setup.*
	CONFIRM	Touch to confirm or approve an action. See *Section 4.2.2.2 Preset/ Settings Management Screen.*
		Disabled

BUTTON	NAME	FUNCTION
	CONTACT INFO	Touch to access the CONTACT INFO screen. See *Section 6.1.3.3 To Manage CONTACT INFO.*
		Indicates the contact information is selected. See *Section 6.1.3.3 To Manage CONTACT INFO.*
		Indicates the contact information is not selected. Touch to select.
	COPY	Touch to copy a selected preset. See *Section 4.2.2.2 Preset/ Settings Management Screen.*
	CREATE NEW	Touch to create a preset or contact information. See *Section 6.1.8.1 To Create a Preset. See Section 6.1.3.3.1 To Create Contact Information.*
	DECREASE	Touch to decrease a value. See *Section 4.2.2.1 Home/Preset Edit Screen.*
		Disabled
	DEFAULT	Indicates the DEFAULT preset is selected. Touch to deselect.
		Indicates the DEFAULT preset is not selected.
	DELETE	Touch to delete a selected preset or contact information.
	EDIT	Touch to edit a selected preset or contact information.
	EJECT	Push to remove the irrigation suction cassette from the console. See *Section 4.1.1 Console Front Panel.*

Not Released Production In Work

BUTTON	NAME	FUNCTION
	FAVORITE	Touch to make a selected preset a favorite preset. See *Section 6.1.8.3 To Select a Favorite Preset.*
	FLUSH	Touch to provide additional irrigation fluid to the tip. See *Section 6.3.2 To Flush the Irrigation Tubing.*
	FORWARD	Touch to access the next screen.
		Disabled
	HANDPIECE POWER INDICATOR	Indicates the audible indicator is ON when the handpiece is activated. Touch to mute the audible indicator. See *Section 6.3.9 To Enable or Disable the Handpiece Power Indicator.*
		Indicates the audible indicator is OFF when the handpiece is activated. Touch to enable the audible indicator.
Handpiece Tip Setup	HANDPIECE TIP SETUP	Touch to access the HANDPIECE TIP SETUP screens. See *Section 6.1.4.1 To Access Handpiece Tip Setup.*
	HOME	Touch to access the HOME screen.
		Disabled
Import / Export	IMPORT/ EXPORT	Intended for Stryker-authorized personnel use only.

BUTTON	NAME	FUNCTION
	INITIAL PRIME	Touch to initially fill the irrigation suction cassette tubing connected to the handpiece with irrigation fluid. See *Section 6.2.5 To Fill (Prime) the Irrigation Tubing.*
	INCREASE	Touch to increase a value. See *Section 4.2.2.1 Home/Preset Edit Screen.*
		Disabled
	KEYBOARD CASE TOGGLE	Touch to access upper case letters.
		Touch to access lower case letters.
?123	KEYBOARD NUMBER/ SYMBOL/ LETTER TOGGLE	Touch to access numbers and symbols.
abcd		Touch to access lower case letters.
ABCD		Touch to access upper case letters.
Language	LANGUAGE SELECTION	Touch to access the LANGUAGE selection screen. See *Section 6.1.4.3 To Select Display Screen Language.*
[language]	LANGUAGE	Indicates the display screen language is selected.
[language]		Indicates the display screen language is not selected. Touch to select.
OK	OK	Touch to acknowledge and close a notification pop-up.
?	OPTIONAL SETUP	Touch to access optional setup information.

Not Released Production In Work

BUTTON	NAME	FUNCTION
	PAIR WIRELESS	Touch to pair the wireless foot pedal to its wireless receiver. See *Section 6.1.5 To Pair a Wireless Foot Pedal.* See *Section 16 Glossary.*
	POWER	Indicates the console is connected to facility power and ready for use mode. Push and hold to activate the stand-by mode. See *Section 6.1.2 To Perform Initial Installation.*
		Indicates the console is connected to facility power and in stand-by mode. Push and hold to activate the ready for use mode. See *Section 6.2.1.1 To Connect Console Power.*
[Name]	PRESET	Indicates a preset is selected. Touch to deselect. See *Section 6.1.8.2 To Select a Preset.*
[Name]		Indicates a preset is not selected. Touch to select.
[Name]	PRESET ROLL-UP	Indicates the name of the selected preset and tip. Touch to access the PRESET roll-up screen. See *Section 6.1.8.2 To Select a Preset.*
	PREVIOUS/ NEXT	Touch to navigate through the component SETUP screen. See *Section 4.2.2.6 Component Setup Screen.*

BUTTON	NAME	FUNCTION
	PRIMING	Indicates irrigation fluid is filling the irrigation suction cassette tubing connected to the handpiece. Touch to cancel the action if necessary. See *Section 6.2.5 To Fill (Prime) the Irrigation Tubing.*
	PULSE CONTROL (OPTIONAL)	Indicates the Pulse Control option is activated, enabled and in a ready for use mode.
		Indicates the Pulse Control option is activated, disabled and in a stand-by mode.
	RESTORE	Touch to return a modified preset to its original value(s). See *Section 6.3.4 To Restore the Settings.*
	SCROLL BAR DOWN ARROW	Tap or touch and hold to scroll down the screen.
		Indicates scroll bar is disabled (at bottom).
	SCROLL BAR UP ARROW	Tap or touch and hold to scroll up the screen.
		Indicates scroll bar is disabled (at top).
	TECHNICIAN MODE	Only Stryker-authorized service technicians may access this password-protected mode. See *Section 12 Service.*
	SETTINGS	Touch to access the system SETTINGS screen. See *Section 6.1.3 To Manage Settings.*
	SLIDER	Touch to scroll through selections or adjust a value on a screen. See *Section 4.2.2.4 Settings Screen.*

Not Released Production In Work