2. From the WIRELESS CONNECTION screen, touch the PAIR WIRELESS button (Figure 47).

Figure 47 – Wireless Connection Screen

3. Slide and hold the WIRELESS/ON/OFF power switch on the foot pedal to the PAIR WIRELESS position until the indicator lamps on the foot pedal blink (Figure 48).
4. Release the WIRELESS/ON/OFF power switch. The foot pedal indicator lamps will stop blinking to indicate a successful pairing.

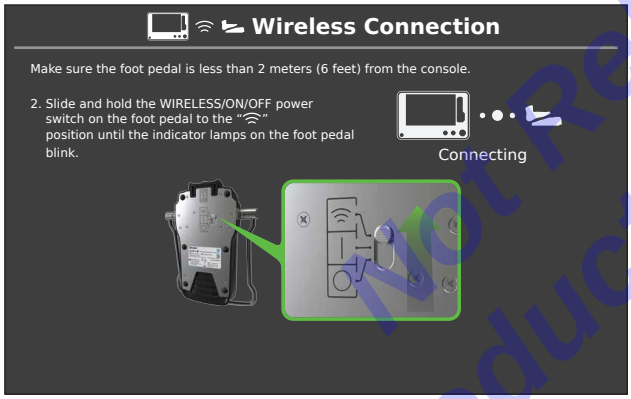

Figure 48 – Foot Pedal Pair Wireless Position

NOTES:

- A green console port indicator confirms a successful connection (Figure 49).
- An amber console port ring indicator signifies an error condition. Low battery power (10 hours remaining) will also cause an error message. To respond to error messages, see *Section 11 Pop-up Codes, Messages, and Corrective Actions.*

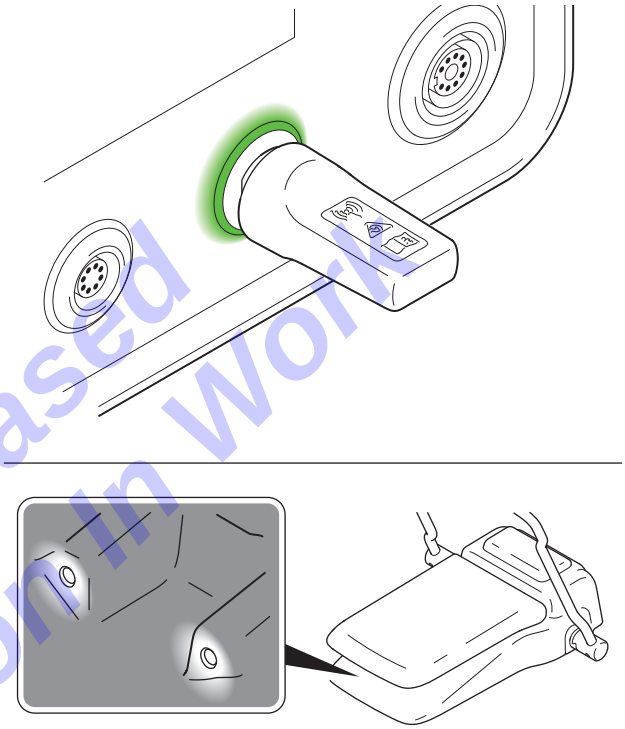

Figure 49 – Successful Wireless Foot Pedal Pairing

6.1.6 To Import or Export a Preset

Contact Stryker sales and service personnel to import or export presets. See *Section 1.3 Contact Information.*

Not Released Production In Work

6.1.7 To View System Information

1. From the SYSTEM SETUP screen or HOME screen, touch the SETTINGS button.
2. From the system SETTINGS screen, touch the SYSTEM INFO (information) button (Figure 50).

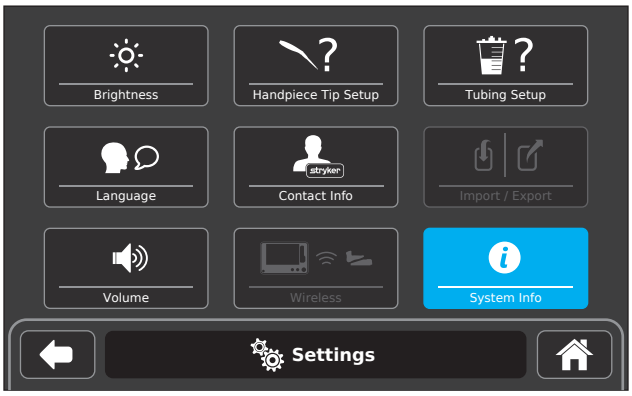

Figure 50 – System Info Selection

NOTES:

- System information includes component software revisions, component names, part numbers, and serial numbers. Information is displayed when a component is connected to the console. Components include the foot pedal, handpiece, tip and sleeve, irrigation suction cassette, and hand controller (Figure 51).
- The technician (service) mode is access protected and only Stryker-authorized personnel may use this mode. See *Section 1.3 Contact Information.*

Figure 51 – System Information Screen

6.1.8 To Manage the Presets

NOTES:

- A DEFAULT preset is provided and may not be edited, copied, or deleted. See *Section 16 Glossary.*
- When the DEFAULT preset is selected, the power, suction, and irrigation setting values are provided by the tip and sleeve set installed on the handpiece.
- A maximum of 100 presets may be created.
- A maximum of 30 characters may be entered to create a preset.

6.1.8.1 To Create a Preset

1. From the SYSTEM SETUP screen or HOME screen, touch the PRESET roll-up button (Figure 52).

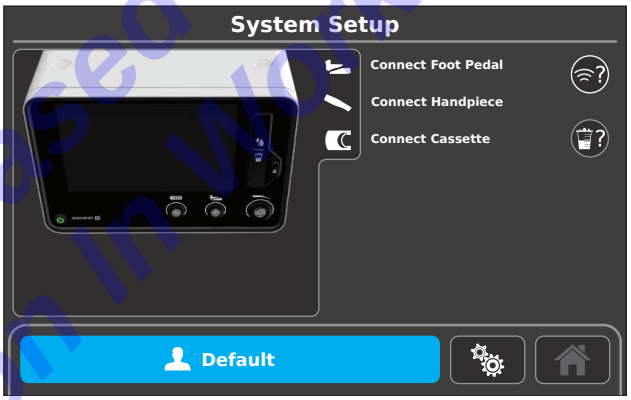

Figure 52 – Preset Access

2. To create a preset, touch the CREATE NEW button (Figure 53).

Figure 53 – Create Preset

Not Released Production In Work

3. Using the keyboard, enter the new preset name (Figure 54).
4. Touch the FORWARD button.

Figure 54 – Enter Preset Name

5. From the SELECT TIP screen, touch to select the desired tip for the preset (Figure 55). Tips are sorted based on the last three digits of the part number. A preset SETTINGS screen will appear to select settings.

NOTE: The preset name may be edited using the EDIT button.

Figure 55 – Select Tip

6. From the preset SETTINGS screen, adjust and select the power, suction, irrigation, and Pulse Control (if activated) settings for the selected tip (Figure 56).

NOTE: The initial setting values displayed represent the default setting values assigned to the selected tip and sleeve set, with the exception of Pulse Control. Tip and sleeve sets are not assigned a default setting value related to the optional Pulse Control.

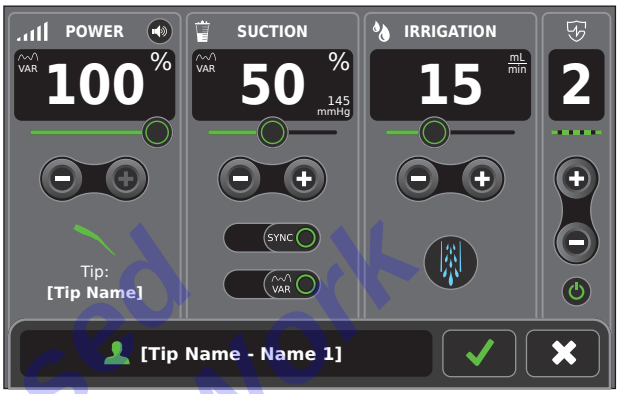

Figure 56 – Select Preset Settings

7. Touch the CONFIRM button to save the preset and exit to the SELECT TIP screen.

NOTE: Additional tips may be selected and added to a preset as necessary.

8. After all the desired tips are selected and assigned settings for a preset, touch the BACK button or HOME button to exit the SELECT TIP screen (Figure 55).

6.1.8.2 To Select a Preset

1. From the SYSTEM SETUP screen or HOME screen, touch the PRESET roll-up button (Figure 57).

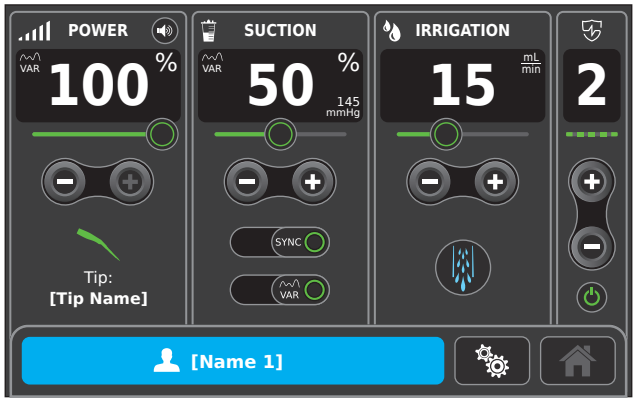

Figure 57 – Preset Selection

Not Released Production in Work

2. Touch the desired preset to make a selection (Figure 58).

Figure 58 – Confirm Preset Selection

3. Touch the CONFIRM button to save the preset selection.

6.1.8.3 To Select a Favorite Preset

1. From the SYSTEM SETUP screen or HOME screen, touch the PRESET roll-up button.
2. Touch the desired preset to make a selection (Figure 59).
3. Touch the FAVORITE button to create a favorite preset.

Figure 59 – Favorite Preset Selection

NOTES:

- Only one preset may be selected as a favorite.
- The designated favorite preset will move to the top of the preset list.
- To remove a favorite preset selection, select the favorite preset and touch the favorite button to make another selection if required.

4. Touch the CONFIRM button to save the preset as a favorite and exit the screen (Figure 60).

Figure 60 – Confirm Favorite Preset

6.1.8.4 To Edit a Preset

1. From the SYSTEM SETUP screen or HOME screen, touch the PRESET roll-up button.
2. To edit a preset, touch and select the desired preset to be edited. Touch the EDIT button (Figure 61).

Figure 61 – Edit Preset Settings

Not Released Production In Work

3. From the SELECT TIP screen, touch to select and edit the preset tip settings (Figure 62). A preset SETTINGS screen will appear to assign preset settings to a selected tip.

NOTES:

- The list of tips on the SELECT TIP screen is arranged by the last three digits of the catalog number.
- New tips are added to the original list during first installation.
- Tips may be selected and deleted from the list.

Figure 62 – Select Tip

4. From the preset SETTINGS screen, edit the power, suction, and irrigation settings as required (Figure 63).

NOTE: The initial power, suction, and irrigation setting values displayed represent the default settings of the selected tip and sleeve set.

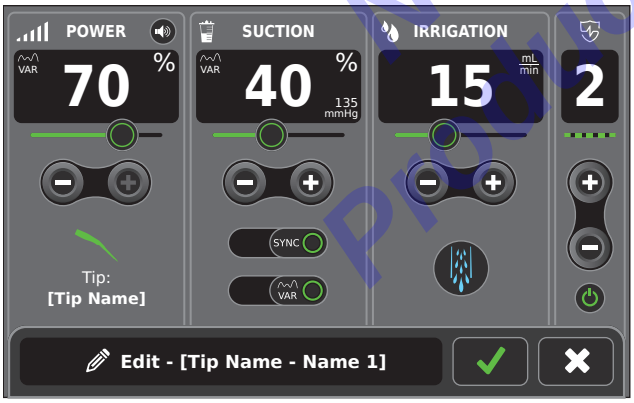

Figure 63 – Confirm Preset Settings

5. Touch the CONFIRM button to save the preset and exit to the SELECT TIP screen.

NOTE: Additional tips may be edited.

6. After all the tips are edited, touch the BACK button or HOME button to exit the SELECT TIP screen.

6.1.8.5 To Copy a Preset

1. From the SYSTEM SETUP screen or HOME screen, touch the PRESET roll-up button.
2. Touch the desired preset to be copied. Touch the COPY button (Figure 64).

Figure 64 – Copy Preset Selection

3. Using the keyboard, edit the preset name (Figure 65).

Figure 65 – Rename Preset

4. Touch the CONFIRM button to save the preset and exit to the PRESET SELECTION screen.

Not Released Production In Work

6.1.8.6 To Delete a Preset

1. From the SYSTEM SETUP screen or HOME screen, touch the PRESET roll-up button.
2. Touch the desired preset to be deleted. Touch the DELETE button (Figure 66).

Figure 66 – Delete Preset Selection

3. From the confirmation pop-up, touch the CONFIRM button to delete the preset or the CANCEL button to cancel the request (Figure 67).

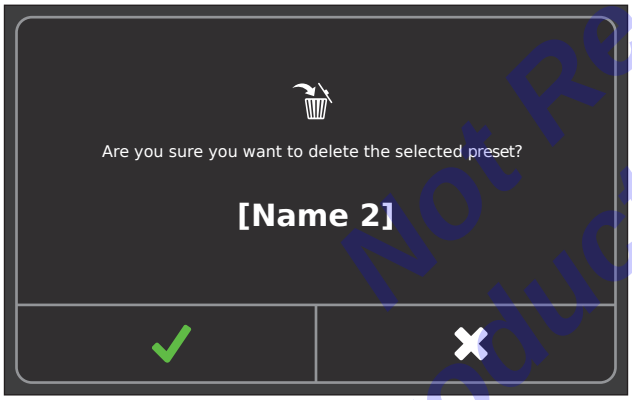

Figure 67 – Confirm Preset Deletion

6.1.9 To Clean and Disinfect the Console

See *Section 7 Cleaning and Disinfection*.

6.1.10 To Prepare the Foot Pedal

6.1.10.1 To Install or Replace the Batteries (Wireless Advanced Foot Pedal Only)

1. Turn the battery compartment knob to unlock and open the door (Figure 68).

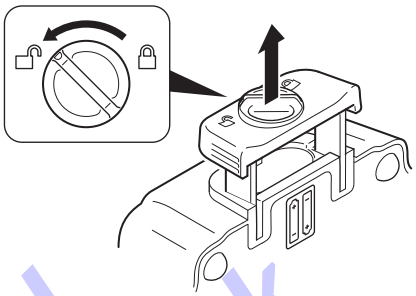

Figure 68 – Access Foot Pedal Batteries

2. Install two AA alkaline batteries into the battery compartment in the correct orientation (Figure 69).

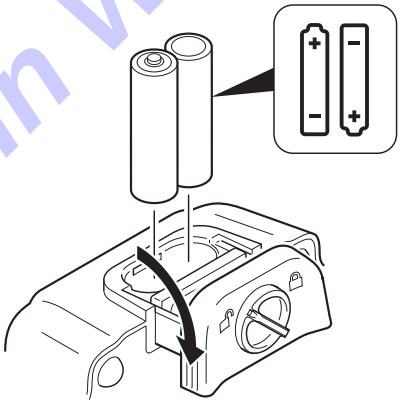

Figure 69 – Install Foot Pedal Batteries

3. Close the door and turn the knob to lock the battery compartment door (Figure 70).

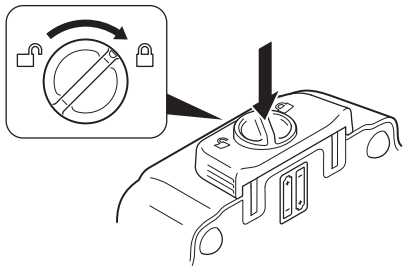

Figure 70 – Close/Lock Battery Compartment Door

6.1.10.2 To Clean and Disinfect the Foot Pedal

See *Section 7 Cleaning and Disinfection*.

Not Released
Production In Work

6.1.11 To Prepare the Handpiece

6.1.11.1 To Clean and Sterilize the Handpiece

WARNING: Clean and sterilize the equipment before first and every use. Equipment includes the handpiece, step torque wrench, and reusable cleaning wire. See the *Sonopet iQ Handpiece and Accessories Processing Instructions REF 5500-001-700* supplied with the console.

6.1.12 To Prepare the Hand Controller (Optional)

See *Section 7 Cleaning and Disinfection*.

6.2 Before the Procedure

WARNINGS:

- Upon initial receipt and before each use, ALWAYS clean and disinfect the console, foot pedal, and hand controller.
- Reusable handpieces are not shipped sterile. ALWAYS clean and sterilize the handpiece before first and every use. See the *Sonopet iQ Handpiece and Accessories Processing Instructions REF 5500-001-700* supplied with the console.
- DO NOT use the equipment in areas in which flammable anesthetics or flammable agents are mixed with air, oxygen, or nitrous oxide.

NOTES:

- When connecting or disconnecting any cable or cord, always grasp the connector or plug during installation or removal.
- Handpiece, foot pedal, and hand controller cables have keyed, push-pull type connectors that fit securely into the console port. DO NOT force a connector into a console port.
- ALWAYS use the connector alignment mark(s) to orient and install cable connectors into console port(s) (Figure 73).

6.2.1 To Prepare the Console

6.2.1.1 To Connect Console Power

WARNING: ALWAYS connect the console to a hospital-grade, facility power receptacle with protective earth (ground) to avoid the risk of electrical shock.

NOTES:

- A Sonopet Cart may be used to provide a flat, sturdy surface for the console. See *Section 3.3 For Use With.*
- Make sure the console is located outside the sterile field.
- Make sure the power cord can be easily removed from the console to facilitate removal of facility power from the console.
- ALWAYS make sure the vent holes in the back and underside of the console are not covered.
- If equipotential grounding is used, connect one end of the bonding cable to the equipotential lug on the console. See *Section 4.1.2 Console Back Panel.* Connect the other end of the bonding cable to the facility grounding bus bar.

1. Put the console on a flat, sturdy surface near a hospital-grade power receptacle with protective earth ground (Figure 72).
2. Position the console so the power cord receptacle can be easily accessed.
3. Connect the power cord to the console power receptacle and to a hospital-grade power receptacle with protective earth (ground).
4. Push the POWER button to turn ON the system (green). See *Section 4.1.1 Console Front Panel.*

NOTE: After power is applied, a SYSTEM SETUP screen will appear (Figure 71).

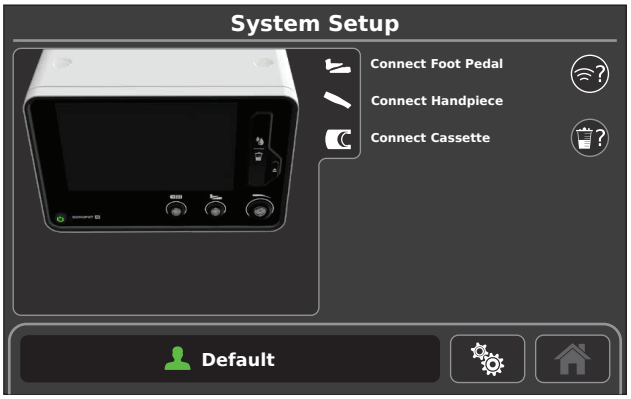

Figure 71 – System Setup Screen

Not Released Production In Work

6.2.1.2 To Install the Fluid Waste Suction Canister

NOTES:

- A disposable fluid waste suction canister is used with the console. See *Section 3.3 For Use With*. See the instructions for use supplied with the suction canister.
- Adjust the suction canister holder on the Sonopet Cart to accommodate the canister size. See the instructions for use supplied with the Sonopet Cart.
- If the Sonopet Cart is not used to hold the fluid waste suction canister, ALWAYS make sure the suction canister is placed at a height level below the console level.

1. Put the suction canister into the holder on the Sonopet cart (Figure 72).
2. Install the right-angle elbow connectors onto the ports of the suction canister lid.

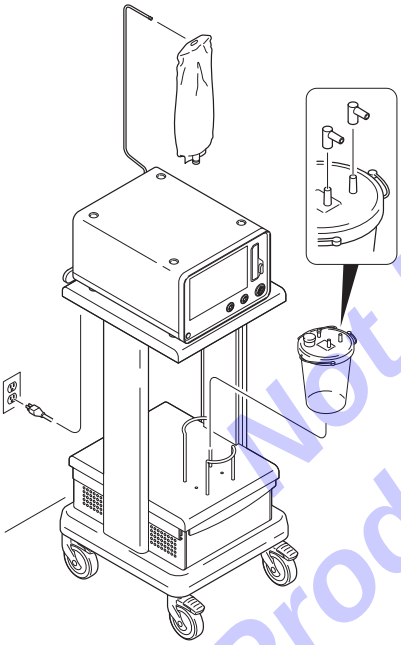

Figure 72 – Console Preparation

6.2.1.3 To Hang the Collapsible Irrigation Container

WARNINGS:

- ALWAYS use a collapsible irrigation fluid container.
- DO NOT use a rigid, non-collapsible irrigation fluid container. Failure to comply may cause the flow of irrigation to be drastically reduced, and result in overheating of the tip and/or sleeve.
- DO NOT use a irrigation fluid container that can hold more than 1000 ml of irrigation fluid.

Suspend a collapsible irrigation fluid container (bag) from the console Irrigation pole (Figure 72).

6.2.2 To Connect the Foot Pedal

WARNING: Upon initial receipt and before each use, ALWAYS clean and disinfect the foot pedal.

NOTE: A wired or wireless foot pedal may be used with the console. See *Section 3.3 For Use With.*

1. If using a wired foot pedal, install the foot pedal cable connector into the console foot pedal port (Figure 73).

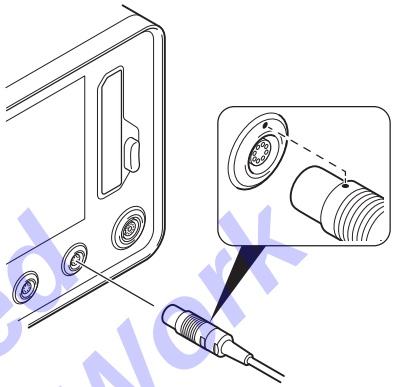

Figure 73 – Wired Foot Pedal Connection

NOTES:

- The foot pedal port ring indicator will blink green to confirm recognition of a wireless receiver. The foot pedal port ring indicator will be solid green when the wireless receiver recognizes the wireless foot pedal.
- The foot pedal status symbol on the SYSTEM SETUP screen will change from white to green to confirm a successful connection.
- An amber foot pedal port ring indicator signifies an error condition. To respond to error messages, see *Section 11 Pop-up Codes, Messages, and Corrective Actions.*

2. If using a wireless foot pedal, install the wireless receiver into the console foot pedal port (Figure 74).

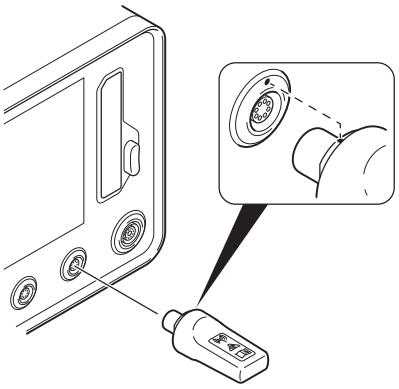

Figure 74 – Wireless Receiver Connection

Not Released Production In Work

NOTES:

- The foot pedal port ring indicator and the foot pedal status symbol on the SYSTEM SETUP screen will change from white to a blinking green to confirm recognition of a wireless foot pedal.
- Make sure the wireless foot pedal is less than two meters (six feet) from the console during wireless connection.
- A WIRELESS SETUP button on the SYSTEM SETUP screen may be used to facilitate a wireless connection.

3. Slide the WIRELESS/ON/OFF power switch on the foot pedal to the ON position (Figure 75).

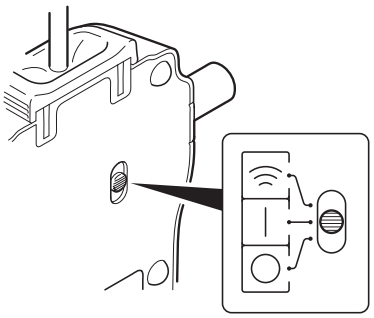

Figure 75 – Foot Pedal Power ON

4. Observe the foot pedal port indicator is green and the foot pedal indicator lamps are illuminated (Figure 76). If a wireless foot pedal fails to connect, see *Section 6.1.5 To Pair a Wireless Foot Pedal.*

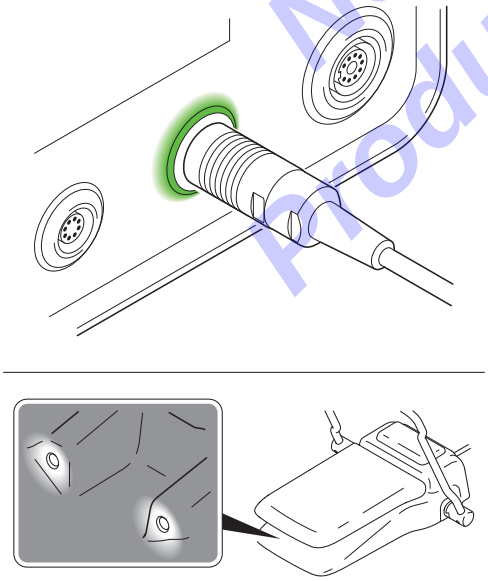

Figure 76 – Successful Wired Foot Pedal Connection

5. Observe the wireless foot pedal indicator lamps are lit. If the foot pedal indicator lamps are not lit, see *Section 6.1.10.1 To Install or Replace the Batteries (Wireless Advanced Foot Pedal Only).*

NOTES:

- Illuminated wireless foot pedal indicator lamps indicate the foot pedal is ON and the batteries are charged.
- An amber foot pedal port ring indicator signifies an error condition. To respond to error messages, see *Section 11 Pop-up Codes, Messages, and Corrective Actions.*

6. After a successful connection, put the [wireless] foot pedal in a location within 4.6 m [15 feet] of the console (Figure 77).

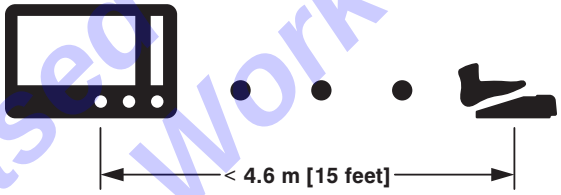

Figure 77 – Console - Wireless Foot Pedal Proximity

NOTE: If using a foot pedal with a toe loop, adjust the toe loop position as required (Figure 78).

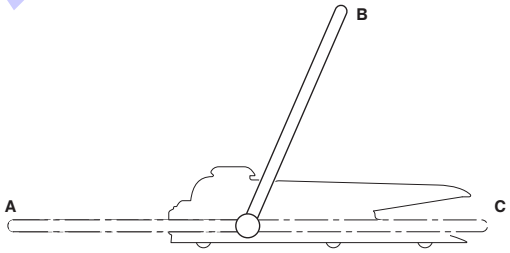

Figure 78 – Adjustable Toe Loop Positions

A	**Out-of-Way Position** – Allows foot pedal use with the toe loop out of the way.
B	**Operating Position** – Allows positioning and repositioning of the foot pedal during use.
C	**Storage Position** – Provides a cord wrap feature during storage. See *Section 6.4.2.6 To Disconnect the Foot Pedal and Receiver.*

Not Released Production In Work

6.2.3 To Prepare the Handpiece

WARNINGS:

- Reusable handpieces are not shipped sterile. ALWAYS clean and sterilize a reusable handpiece before first and every use. See the *Sonopet iQ Handpiece and Accessories Processing Instructions REF 5500-001-700* supplied with the console.
- ALWAYS handle the handpiece with care. DO NOT drop the handpiece.

NOTE: A spare, sterile handpiece is recommended for a surgical procedure. Immediate-use steam sterilization is NOT recommended for the handpiece.

6.2.3.1 To Transfer the Handpiece into the Sterile Field

1. Inspect the sterile barrier before transfer into the sterile field. Make sure the sterile barrier is not compromised.
2. Transfer the handpiece, torque wrench, and reusable cleaning wire into the sterile field.

6.2.3.2 To Connect the Handpiece to the Console (Outside Sterile Field)

1. Pass the connector end of the handpiece cable toward the console.
2. Install the handpiece cable connector into the console handpiece port (Figure 79).

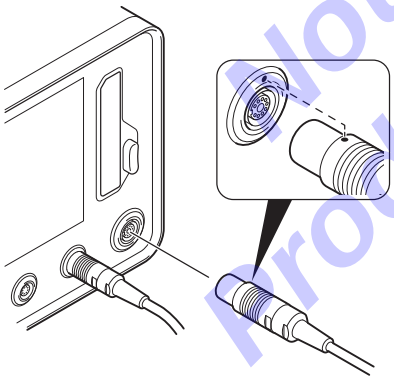

Figure 79 – Handpiece Connection

NOTES:

- The handpiece port ring indicator and the handpiece status symbol on the SYSTEM SETUP screen will change from white to green to confirm a successful connection.
- The handpiece port ring indicator will blink green until a tip and sleeve set is installed onto the handpiece.
- A HANDPIECE TIP SETUP button on the SYSTEM SETUP screen may be used to facilitate a tip and sleeve set installation.
- An amber handpiece port ring indicator signifies an error condition. To respond to error messages, see *Section 11 Pop-up Codes, Messages, and Corrective Actions.*

6.2.3.3 To Transfer a Tip and Sleeve into the Sterile Field

WARNINGS:

- A tip and sleeve set is terminally sterilized using ethylene oxide. Before use, visually inspect the package for damage and to confirm the integrity of the sterile barrier. DO NOT use the product if damage is apparent, the sterile barrier is compromised, or the package is unintentionally opened.
- After the tip and sleeve packaging is opened, discard any unused tip and sleeve set. DO NOT reuse, reprocess, resterilize, or repackage an unused tip and sleeve set.

1. Inspect the packaging for damage and confirm the integrity of the sterile barrier.
2. To complete the sterile transfer:

NOTE: Some product(s) use a single sterile barrier configuration (one layer). Other products use a double sterile barrier configuration (two layers).

2.1. If using a single sterile barrier packaging configuration, peel the pouch package open and transfer the inner tray into the sterile field.

2.2. If using a double sterile barrier packaging configuration:

NOTES:

- The outer packaging allows two methods of aseptic transfer: (1) open and drop/dump or (2) open and offer/pick.
- If required, the inner packaging also allows a method of aseptic transfer: open and offer/pick.

2.2.1. Peel the outer package lid to open and transfer the inner package into the sterile field.

2.2.2. Peel the inner package lid to open and remove the tip and sleeve from its packaging.

3. Inspect the tip and sleeve set for any apparent damage. DO NOT use if damage is apparent. See *Section 6.3.7 To Inspect a Tip and Tip Sleeve.*

Not Released Production in Work

6.2.3.4 To Install a Tip and Sleeve on the Handpiece

CAUTION: DO NOT under torque or over torque the tip onto the handpiece. Make sure the torque wrench handle pivots around the torque wrench head, but DOES NOT exceed 90 degrees. Failure to comply may damage the tip or handpiece threads and result in loss of power to the handpiece during use. (Figure 80).

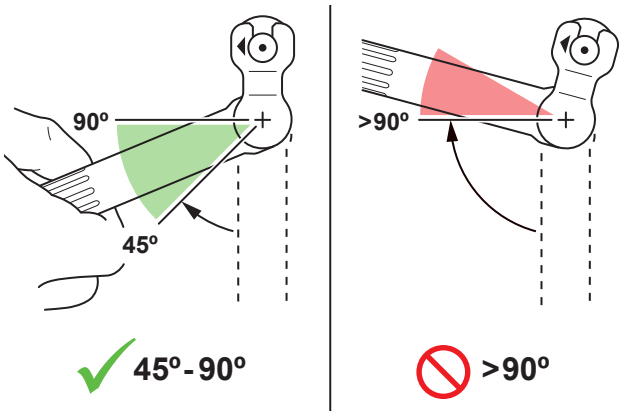

Figure 80 – Torque Wrench Application

NOTES:

- Use the 7 mm step torque wrench REF 5450-800-039 to install the tip to the handpiece. See *Section 3.3 For Use With.*
- ALWAYS make sure the tip and sleeve set is assembled correctly onto the handpiece.

1. Manually install the tip into the handpiece finger tight (Figure 81).

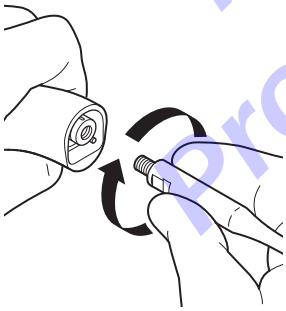

Figure 81 – Tip Installation

2. Install the torque wrench head onto the tip flats (Figure 82).

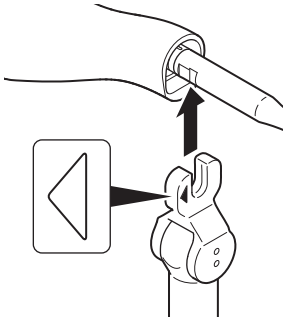

Figure 82 – Torque Wrench Orientation

NOTES:

- Make sure the arrow on the torque wrench head is oriented correctly (Figure 82).
- When installing the torque wrench head onto the tip flats, make sure the mark on the bottom of the torque wrench handle faces the tip end. See *Table 6 Step Torque Wrench Product Mark(s).*

3. Using the torque wrench, apply rotational force in the direction of the arrow (Figure 83). Stop tightening the tip as illustrated.
4. Remove the torque wrench in the torqued position from the tip (Figure 83).

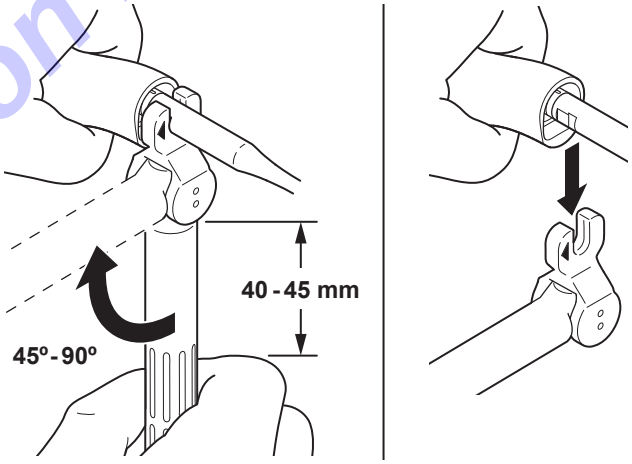

Figure 83 – Tip Tightening

NOTE: To remove the frangible (breakable) section of the sleeve, *see Section 6.2.3.4.1 To Remove the Frangible Section of a Tip Sleeve (optional).*

Not Released Production In Work

5. Slide the sleeve over the tip (Figure 84). Push the sleeve into the handpiece until it stops.

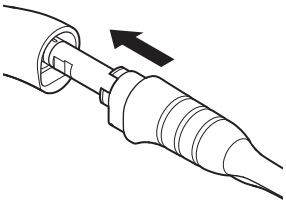

Figure 84 – Tip Sleeve Installation

NOTES:

- The tip status symbol on the SYSTEM SETUP screen will change from white to green to indicate a successful connection.
- The tip name will appear on display screen after the tip sleeve is installed successfully.

6.2.3.4.1 To Remove the Frangible Section of a Tip Sleeve (optional)

WARNINGS:

- If the sleeve frangible (breakable) section is removed from the sleeve, ALWAYS apply optimal (sufficient) irrigation to the tip during use. Failure to comply may result in excessive heat and increase the risk of thermal damage to tissue.
- Make sure the removal of the frangible section results in a clean break (no cracks or sharp edges).

CAUTION: Make sure the removal of the frangible section is performed away from the surgical site.

NOTES:

- Removing the frangible section of a sleeve increases tip exposure relative to the sleeve and results in an improved line of sight.
- Removing the frangible section of a sleeve may result in increased irrigation dispersion.
- Removing the frangible section of a sleeve may result in excessive misting at the tip.
- The frangible section of a sleeve is designed to be removed by hand with a levering, prying, twisting force or motion.

1. Remove the sleeve from the handpiece.
2. Grasp the sleeve close to the frangible section perforation (Figure 85).
3. Applying force, remove the frangible section from the distal end of the sleeve.

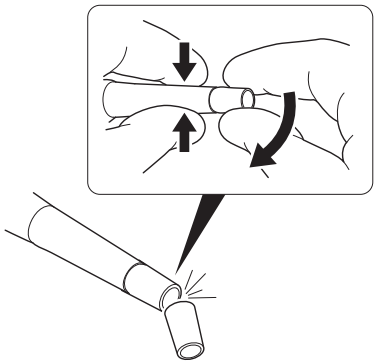

Figure 85 – Sleeve Frangible Section Removal

4. Inspect the end of the sleeve and make sure there are no cracks or sharp edges.
5. Properly dispose of the frangible section in an appropriate container. See *Section 13 Disposal/ Recycle.*

6.2.3.5 To Confirm a Tip and Sleeve Installation

NOTES:

- The power, suction, and irrigation default setting values assigned to a tip and sleeve set are displayed on the console screen. Pulse Control settings are not assigned to any tip and sleeve set.
- The Pulse Control (optional feature) default setting value will also be displayed on the console screen if activated.
- Make sure the tip and sleeve set information and the setting values displayed on the console agree with your application requirements.
- If the console detects a tip without a tip aspiration port, the suction control and SYNC mode button on the display screen are disabled (Figure 86).

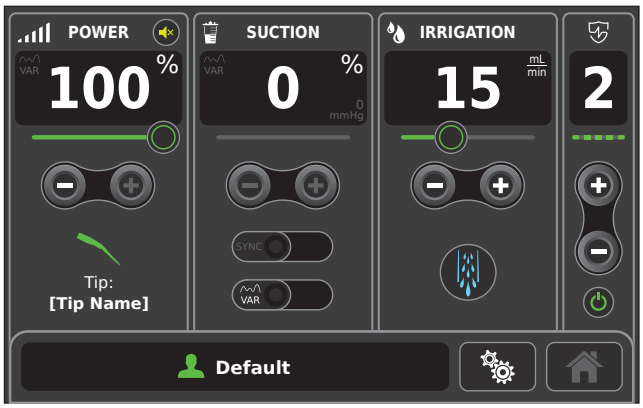

Figure 86 – Suction Control Disabled

Not Released Production In Work

6.2.4 To Install the Irrigation Suction Cassette

WARNINGS:

- The irrigation suction cassette is terminally sterilized using ethylene oxide. Before use, inspect the packaging. DO NOT use if the packaging (sterile barrier) is open or damaged.
- Before use, inspect each component for damage. DO NOT use any component if damage is apparent.

NOTES:

- The disposable cleaning wire supplied with the irrigation suction cassette is used to clear a clogged handpiece and/or tip.
- Make sure a cleaning wire is readily available when using the handpiece.

6.2.4.1 To Transfer the Irrigation Suction Cassette into the Sterile Field

NOTES:

- The outer packaging allows two methods of aseptic transfer: (1) open and drop/dump or (2) open and offer/pick.
- If required, the inner packaging also allows a method of aseptic transfer: open and offer/pick.

1. Inspect the packaging for damage before transfer into the sterile field. Make sure the sterile barrier is not compromised.
2. Peel the outer package lid to open and transfer the inner package into the sterile field.
3. Peel the inner package lid to open and remove the two cassette tubing bundles.
4. Inspect the equipment for any damage. DO NOT use if damage is apparent.
5. Pass the tubing bundle with the cassette, irrigation spike, and suction canister tubing connectors outside the sterile field toward the console (Figure 87).

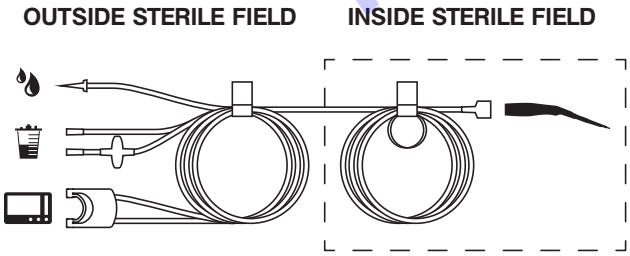

Figure 87 – Irrigation Suction Cassette Bundles

6. Remove the paper securing the cassette tubing bundle and separate the bundle.

NOTE: Make sure the handpiece tubing connector bundle remains in the sterile field to complete the handpiece assembly.

6.2.4.2 To Connect the Suction Canister, Cassette, and Irrigation Tubing (Outside Sterile Field)

NOTES:

- The disposable, single use suction canister may be installed on the Sonopet Cart or in a secure, fixed location near and at a height level below the console. See the instructions for use supplied with the Sonopet Cart.
- An Irrigation pole may be installed onto the console or located near the console. See *Section 6.1.2 To Perform Initial Installation.*

1. Connect the suction tube connector marked VACUUM to the suction canister port marked VACUUM (Figure 88).
2. Connect the suction tube connector marked PATIENT to the suction canister port marked PATIENT.
3. Make sure all unused suction canister ports are closed.

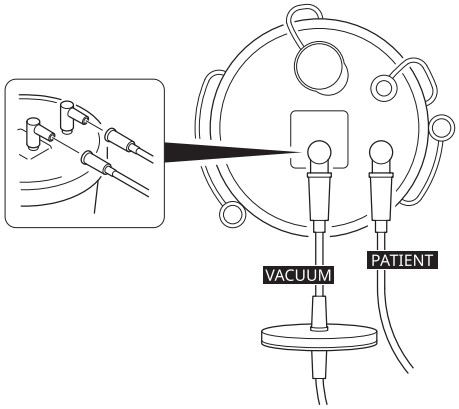

Figure 88 – Suction Canister Tubing Connections

Not Released
Production In Work

NOTE: An optional specimen collector may be used with the suction canister (Figure 89).

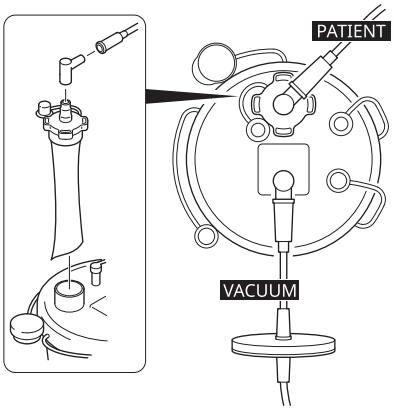

Figure 89 – Optional Specimen Collector

4. Using the TOP and ARROW symbols on the cassette, insert the cassette into the console until an audible click is heard (Figure 90).

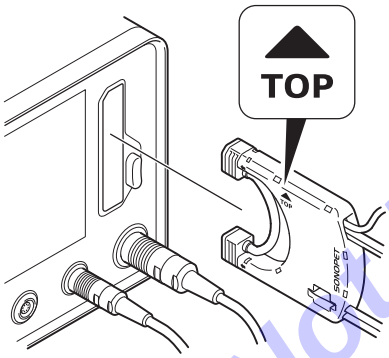

Figure 90 – Irrigation Suction Cassette Installation

WARNINGS:

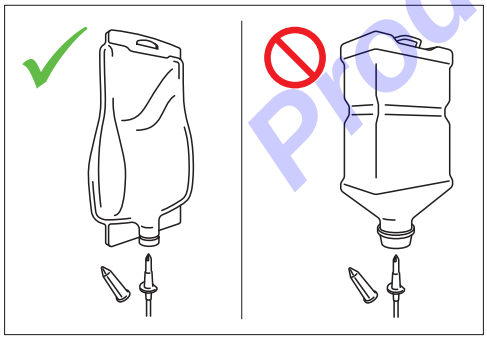

- ALWAYS use a collapsible irrigation fluid container.
- DO NOT use a rigid, non-collapsible irrigation fluid container. Failure to comply may cause the flow of irrigation to be drastically reduced, and result in overheating of the tip and/or tip sleeve.

5. Remove the protective cover from the irrigation tubing spike (Figure 91).
6. Insert the irrigation tubing spike into the port of the collapsible irrigation fluid container or bag.

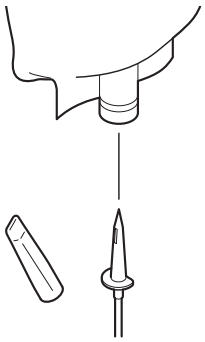

Figure 91 – Irrigation Bag Connection

6.2.4.3 To Connect the Handpiece Tubing Connector (Inside Sterile Field)

CAUTION: ALWAYS use care when attaching the handpiece cable clips onto the handpiece cable to prevent damage to surgical gloves.

1. Remove the paper band securing the handpiece tubing connector bundle and the disposable cleaning wire. Keep the disposable cleaning wire for use during the procedure (Figure 92).

NOTE: The disposable cleaning wire is used to clear a clogged tip during handpiece use. See *Section 6.3.6 To Clear a Clogged Tip.*

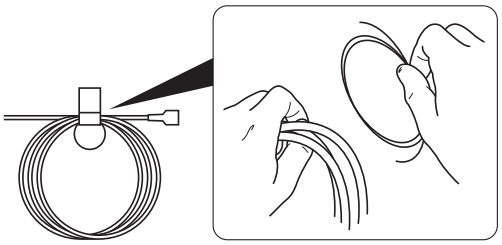

Figure 92 – Disposable Cleaning Wire Removal

Not Released Production In Work

2. Separate the tubing bundle and attach the handpiece tubing connector to the end of the handpiece (Figure 93).

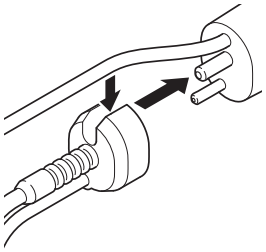

Figure 93 – Handpiece Tubing Connector Installation

NOTE: Make sure the handpiece cable is inserted into the handpiece tubing connector groove.

3. Using the four handpiece cable clips, attach the handpiece cable to the tubing (Figure 94).

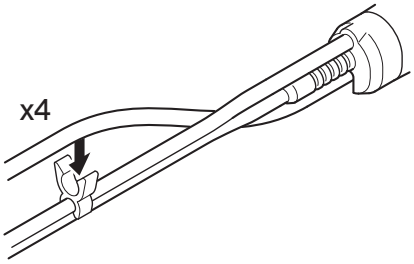

Figure 94 – Handpiece Cable Clips Installation

6.2.5 To Fill (Prime) the Irrigation Tubing

WARNINGS:

- ALWAYS initially fill or prime the irrigation tubing connected to the handpiece with irrigation fluid. Failure to comply may result in excessive heat and increase the risk of thermal damage to tissue.
- DO NOT use ultrasonic power without irrigation fluid flowing from the tip of the handpiece (Figure 98).

NOTES:

- After the successful connection of the handpiece, tip, and irrigation suction cassette, the INITIAL PRIME button will appear on the SYSTEM SETUP screen.
- During priming the irrigation tubing is filled with irrigation fluid.
- If power is inadvertently lost or interrupted and then applied after a successful installation of all the system components (handpiece, tip and sleeve set, irrigation suction cassette, and foot pedal), a quick start confirmation pop-up will appear (Figure 95).

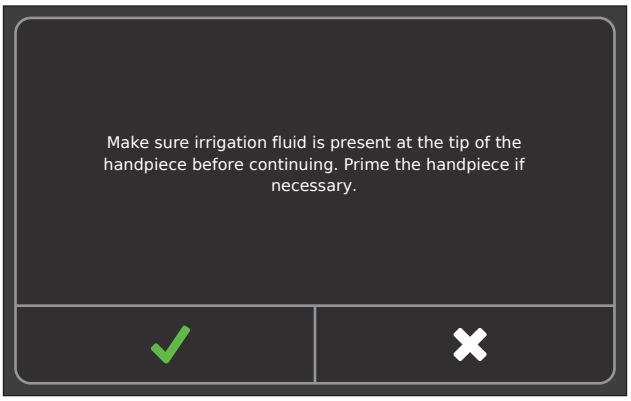

Figure 95 – Quick Start Confirmation Pop-up

- If the irrigation suction cassette is removed or replaced during a procedure, an INITIAL PRIME pop-up prompt will appear (Figure 96). Touch the INITIAL PRIME button. Make sure irrigation fluid is present at the tip (Figure 98).

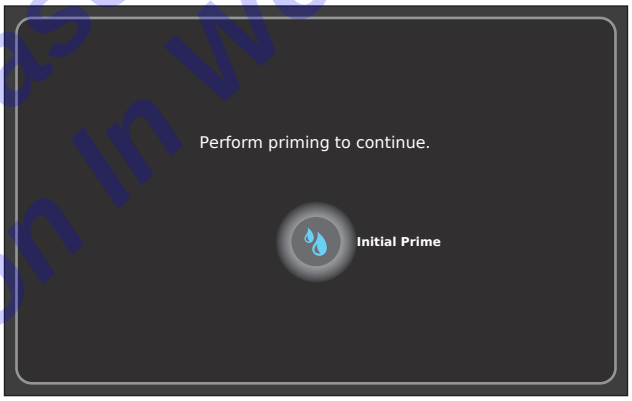

Figure 96 – INITIAL PRIME Pop-up

1. From the SYSTEM SETUP screen, touch the INITIAL PRIME button (Figure 97).

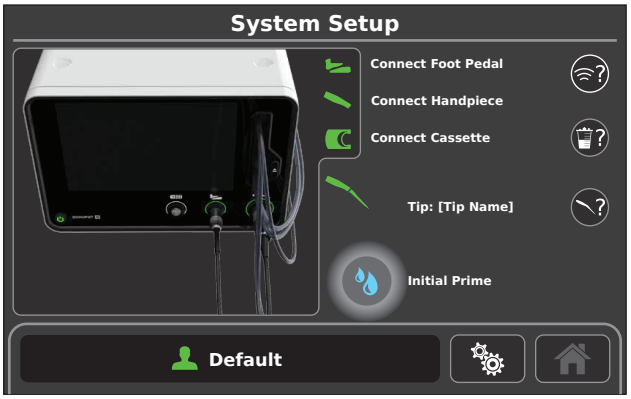

Figure 97 – INITIAL PRIME Button Prompt (pulsing)

Not Released Production In Work

2. Make sure irrigation fluid is present at the tip (Figure 98).

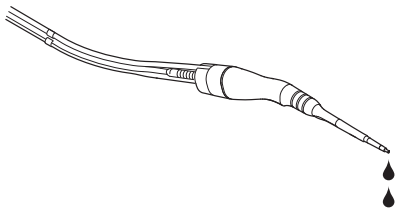

Figure 98 – Tip Irrigation

6.2.6 To Connect the Hand Controller (Optional)

WARNINGS:

- Upon initial receipt and before each use, ALWAYS clean and disinfect the hand controller.
- DO NOT put a connected hand controller on a patient.
- ALWAYS use a sterile drape when using a hand controller in a sterile field. Make sure the sterile drape covers the length of the hand controller cord used within the sterile field. Failure to comply may lead to infection and result in patient injury.

NOTE: The hand controller is used to adjust console settings inside the sterile field, including ultrasonic power, irrigation, and suction. A handpiece irrigation flush may also be initiated.

1. Install the hand controller cable connector into the console port (Figure 99).

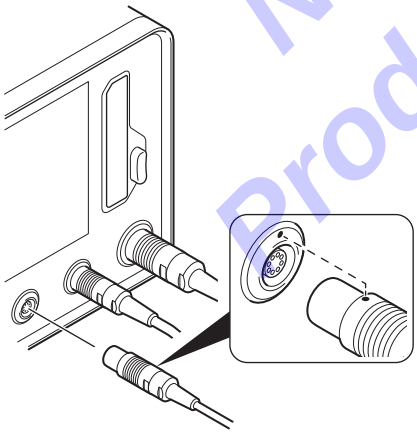

Figure 99 – Hand Controller Connection

NOTES:

- The hand controller port ring indicator will change from white to green to confirm a successful connection.
- An amber hand controller port ring indicator signifies an error condition. To respond to error messages, see *Section 11 Pop-up Codes, Messages, and Corrective Actions.*

2. Transfer the sterile drape REF 5500-472-000 into the sterile field.
3. Open the sterile drape within the sterile field.
4. Pass the hand controller housing body into the sterile field and into the sterile drape (Figure 100).

Figure 100 – Hand Controller Body in Sterile Drape

5. Cover the length of the hand controller cord in the sterile field with the sterile drape. Secure the end of the sterile drape to the hand controller cord. See the instructions for use supplied with the sterile drape.

Not Released Production In Work

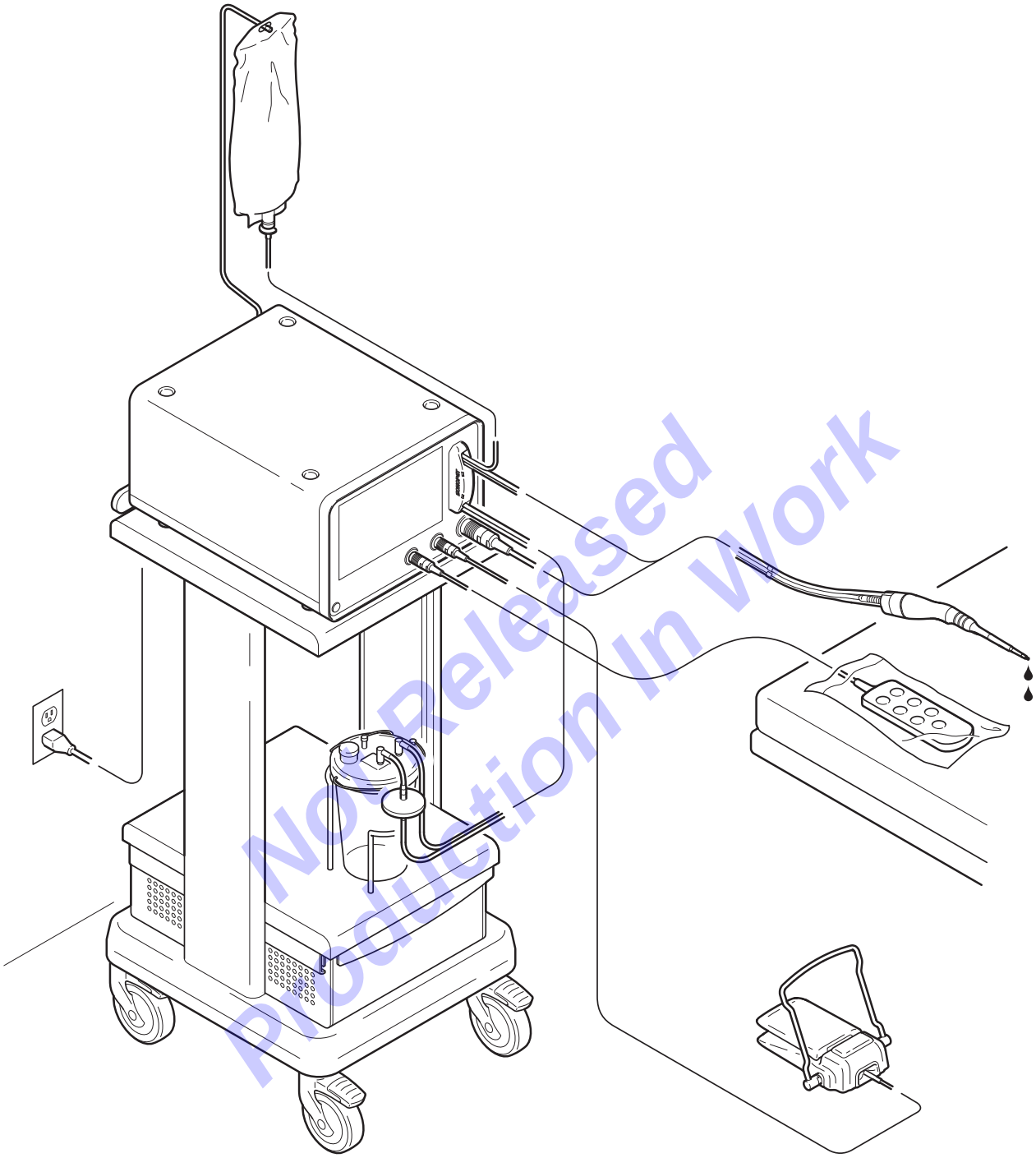

Not Released
Production In Work

Figure 101 – Complete System Configuration with (optional) Hand Controller

6.2.7 To Test the Handpiece Before Use

NOTES:

- Touch the PRIMING button, if necessary, to stop the filling of the irrigation tubing.
- If there is insufficient or excessive irrigation fluid during initial priming, see *Section 10 Troubleshooting.*
- Once all the required system components are installed and initial priming is complete (Figure 101), the HOME screen appears and the system is ready for use (Figure 102).

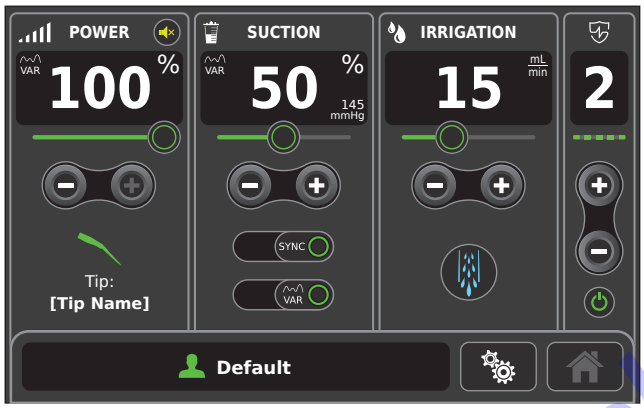

Figure 102 – Home Screen

Test the operation of the handpiece for 10 to 15 seconds. If there are any unusual sounds or vibration, see *Section 10 Troubleshooting*. To respond to error messages, see *Section 11 Pop-up Codes, Messages, and Corrective Actions.*

6.3 During the Procedure

WARNING: DO NOT service, or repair this equipment during a procedure with a patient.

NOTES:

- DO NOT touch the console display screen with any sharp or hard object.
- To create presets, see *Section 6.1.8.1 To Create a Preset.*
- To respond to error messages, see *Section 11 Pop-up Codes, Messages, and Corrective Actions* and *Section 10 Troubleshooting*.

6.3.1 To Operate the Handpiece

WARNINGS:

- Continuous cutting for extended periods at higher power settings may result in excessive heat and the risk of thermal damage to tissue. See *Table 20 Tip and Sleeve Duty Cycle. See Section 16 Glossary.*
- DO NOT touch the exposed tip when applying ultrasonic power.
- DO NOT put a connected handpiece on a patient.
- DO NOT strike the tip against a surgical instrument when applying ultrasonic power.
- DO NOT apply excessive force or side loading on the tip or tip sleeve during handpiece use. Failure to comply may cause the handpiece and/or tip and tip sleeve to overheat.

Table 20 – Tip and Sleeve Duty Cycle

Maximum ON time cutting:	24 seconds
Minimum OFF time:	8 seconds
Maximum number of events:	3
Rest period after 3 events:	6 minutes

NOTE: An event is the combination of ON time cutting and OFF time.

CAUTION: ALWAYS operate the handpiece within the specified environmental condition values. See *Section 14 Specifications*.

NOTES:

- The characteristics of handpiece operation will depend on the mode of operation. See *Table 21 VAR (variable) Mode of Operation and Table 22 SYNC (synchronize) Mode of Operation*.
- To activate the handpiece, make sure the suction level is set to a value greater than zero percent. Handpiece output will remain disabled if the suction level is zero.
- Suction will not be available (or necessary) when using a tip without an aspiration port.

To activate the handpiece, push down on (press) the foot pedal treadle to apply ultrasonic power, suction, and irrigation to the surgical site.

Not Released Production In Work

Table 21 – VAR (variable) Mode of Operation

Mode:	ON	OFF
Power and Suction:	Actual values will depend on the amount of force applied to the foot pedal treadle. As force is applied, the values will vary and the display screen values will reflect the variation. When no force is applied, the entered value or preset values will be displayed. See *Section 16 Glossary.*	Actual values will depend on the entered values or preset values. As force is applied to the foot pedal treadle, the actual values will be determined by the setting values and will remain constant. The displayed setting values will not change as force on the foot pedal treadle varies.
Irrigation or Pulse Control (optional):	No impact on the output.	No impact on the output.

Table 22 – SYNC (synchronize) Mode of Operation

Mode:	ON	OFF
Power or Pulse Control (optional):	No impact on the output.	No impact on the output.
Suction:	The output will depend on the state of the foot pedal treadle. If force is applied to the treadle, output is provided. If no force is applied to the treadle, output is not provided.	The output will depend on the state of the foot pedal treadle. If force is applied to the treadle, output is provided. If no force is applied to the treadle, output will be provided at the level set on the console screen.
Irrigation:	No impact on the output.	The output will depend on the state of the foot pedal treadle. If force is applied to the treadle, output is provided. If no force is applied to the treadle, output is provided at the level set displayed on the console screen.

6.3.2 To Flush the Irrigation Tubing

1. To provide additional irrigation fluid to the tip, touch and hold the FLUSH button.
2. Release the FLUSH button to stop irrigation fluid flow to the tip.

NOTE: A FLUSH button is located on the console touchscreen (Figure 103), foot pedal, and hand controller. See *Section 3.4.4 Foot Pedal* and *Section 3.4.5 Hand Controller.*

Figure 103 – Irrigation Flush Button

6.3.3 To Adjust Power, Suction, Irrigation, and Pulse Control (optional) Setting Values

WARNINGS:

- Low irrigation settings (below 15 mL/min) may increase the risk of thermal damage to tissue.
- DO NOT use insufficient irrigation flow. Failure to comply may result in excessive heat and the risk of thermal damage to tissue.
- DO NOT use ultrasonic power without irrigation fluid flowing from the tip of the handpiece.
- DO NOT put a connected hand controller on a patient.

CAUTION: DO NOT use excessive irrigation flow. Failure to comply may reduce the visibility of the surgical site.

NOTE: The hand controller is used to adjust console settings inside the sterile field, including ultrasonic power, irrigation, and suction. A handpiece irrigation flush may also be initiated. The optional Pulse Control (requires activation) settings must be adjusted from the console touchscreen.

Not Released Production In Work

NOTES:

- If the irrigation setting is set below the 15 mL/min limit, a LOW IRRIGATION WARNING pop-up will appear (Figure 104). Two options are available:
  - Touch the CONFIRM button or the FLUSH button to accept the low irrigation setting.
  - Touch the CANCEL button to adjust the irrigation setting to a minimum of 15 mL/min.

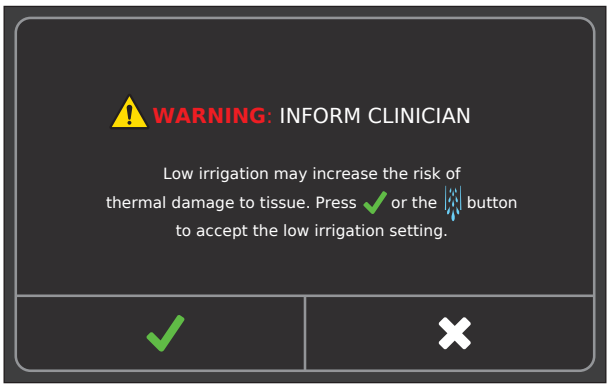

Figure 104 – Low Irrigation WARNING Pop-up

Use the console touchscreen or optional hand controller to adjust the power, suction, or irrigation setting values.

NOTE: The optional Pulse Control (requires activation) settings must be adjusted from the console touchscreen. Changing Pulse Control settings may result in a change in vibrational feel of the handpiece during use.

6.3.4 To Restore the Settings

If any of the preset values are modified on the HOME screen, a RESTORE button appears. From the HOME screen, touch the RESTORE button to return to the original preset values (Figure 105).

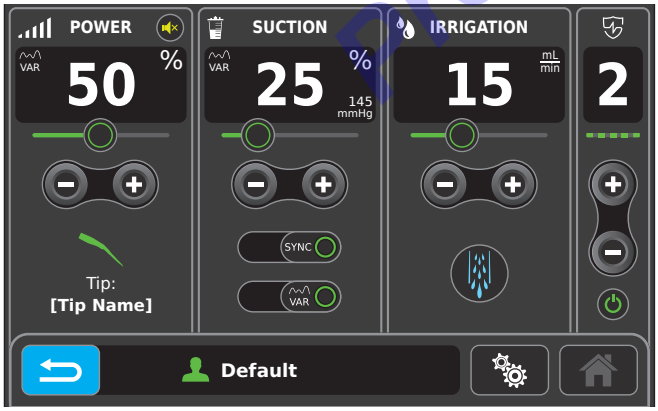

Figure 105 – Settings Restoration Screen

6.3.5 To Change a Preset Selection

See *Section 6.1.8 To Manage the Presets*.

6.3.6 To Clear a Clogged Tip

NOTES:

- A disposable cleaning wire is supplied with the irrigation suction cassette REF 5500-573-000. A reusable cleaning wire is an optional accessory sold separately.
- To help prevent a tip from clogging during intermittent or delayed use, periodically place the tip into sterile irrigation fluid with suction on.
- If there is insufficient suction or excessive misting at the end of the tip, see *Section 10 Troubleshooting*.

1. Insert a cleaning wire into the tip aspiration port and handpiece suction lumen to dislodge and remove debris (Figure 106).

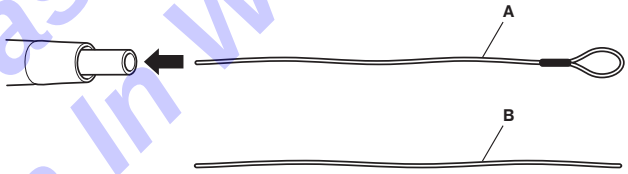

Figure 106 – Cleaning Wire Insertion

A	Reusable Cleaning Wire (metal)
B	Disposable Cleaning Wire (plastic)

2. Inspect the tip aspiration port and suction tubing to confirm the removal of debris.

Not Released Production In Work

6.3.7 To Inspect a Tip and Tip Sleeve

NOTES:

- Inspect the tip and sleeve set for damage or signs of wear (Figure 107). DO NOT use a damaged or worn tip or tip sleeve during a procedure.
- Make sure the tip and tip sleeve are not bent, scratched, or cracked.
- Make sure no part of the tip and tip sleeve is broken or missing.

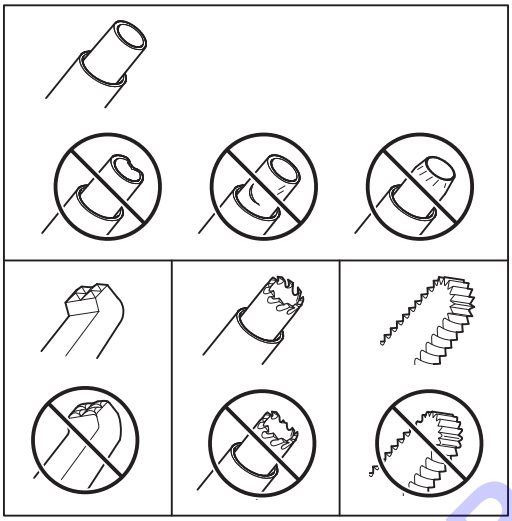

Figure 107 – Tip Damage

NOTE: If the tip has a pre-aspiration hole, make sure the hole is not exposed when the tip sleeve is installed (Figure 108).

Figure 108 – Tip Sleeve Damage

6.3.8 To Replace a Tip and Sleeve Set

Replace a tip and sleeve set using the step torque wrench REF 5450-800-039. See *Section 6.2.3.3 To Transfer a Tip and Sleeve into the Sterile Field*.

6.3.9 To Enable or Disable the Handpiece Power Indicator

Touch the HANDPIECE POWER INDICATOR button to enable or disable the audible handpiece power indicator (Figure 109).

NOTE: The default setting of the handpiece power indicator is OFF (muted).

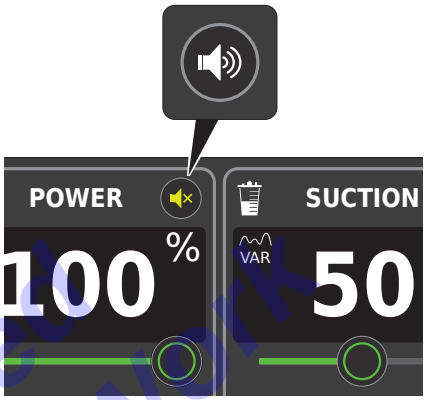

Figure 109 – Handpiece Power Indicator Control

6.3.10 To Change a System Setting

See *Section 6.1.3 To Manage Settings*.

Not Released
Production In Work

6.4 After the Procedure

NOTE: Before removing power and system components, use suction to empty the irrigation suction cassette tubing of any visible solid or liquid waste.

6.4.1 To Remove Power

CAUTION: Some power cords have a locking mechanism to prevent accidental disconnection (Figure 110). To remove a power cord with a locking mechanism, slide back the red locking tab.

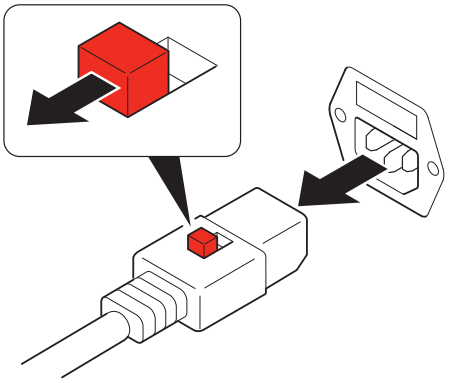

Figure 110 – Power Cord Locking Mechanism

1. Push the power button to turn OFF system power (amber).
2. Disconnect the power cord from the console power receptacle and the hospital-grade power receptacle.

NOTE: If used, disconnect the equipotential bonding cable from the equipotential lug on the console. Disconnect the other end of the bonding cable from the facility grounding bus bar.

6.4.2 To Remove System Components

WARNINGS:

- ALWAYS follow the current local regulations governing the proper handling and disposal of biohazard waste. Failure to comply may cause environmental contamination and result in injury.
- ALWAYS follow the current local regulations governing the proper handling and disposal of sharps.
- DO NOT reuse, reprocess, or repackage a tip and sleeve set, an irrigation suction cassette, sterile drape, or suction canister intended for single use only.
  - A single use device may not withstand chemical, chemical vapor, or high temperature sterilization reprocessing.
  - Design features may make cleaning difficult.
  - Reuse may create a contamination risk and compromise structural integrity resulting in operational failure.
  - Critical product information may be lost during repackaging.

Failure to comply may lead to infection or cross infection and result in patient and/or healthcare staff injury.

Table 23 – Reusable Components to Keep and Disposable Components to Discard

KEEP/REUSABLE	DISCARD/SINGLE USE
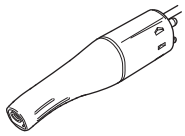 Handpiece	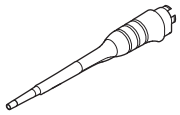 Tip Sleeve
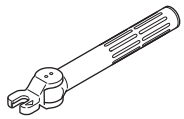 Step Torque Wrench	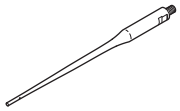 Tip
Cleaning Wire (metal)	Cleaning Wire (plastic)
Foot Pedal	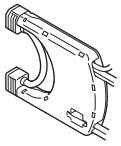 Irrigation Suction Cassette

Not Released Production In Work