KEEP/REUSABLE	DISCARD/SINGLE USE
Wireless Receiver	Waste Suction Canister
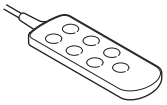 Hand Controller	Sterile Drape (if used)
	Irrigation Fluid Container

6.4.2.1 To Remove and Disassemble the Handpiece

1. Disconnect the handpiece from the console (Figure 111).

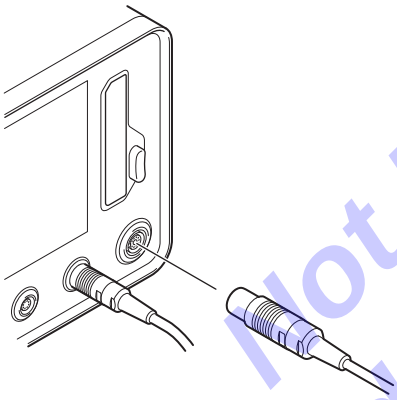

Figure 111 – Handpiece Disconnection

2. Separate the handpiece cable from the four handpiece cable clips (Figure 112).

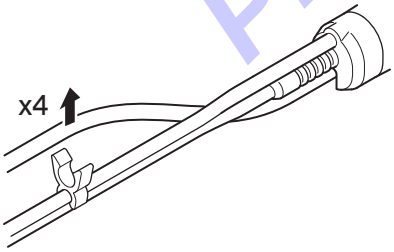

Figure 112 – Handpiece Cable and Tubing Separation

3. Disconnect the handpiece tubing connector of the irrigation suction cassette from the handpiece (Figure 113).

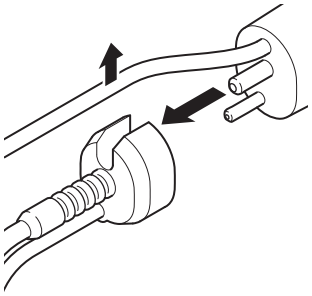

Figure 113 – Handpiece Tubing Connector Disconnection

4. Remove the tip sleeve from the handpiece (Figure 114).

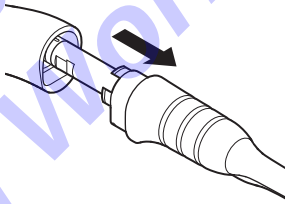

Figure 114 – Tip Sleeve Removal

5. Dispose of the single use tip sleeve into an appropriate container. See *Section 13 Disposal/Recycle.*
6. Using the torque wrench, loosen the tip on the handpiece (Figure 115).

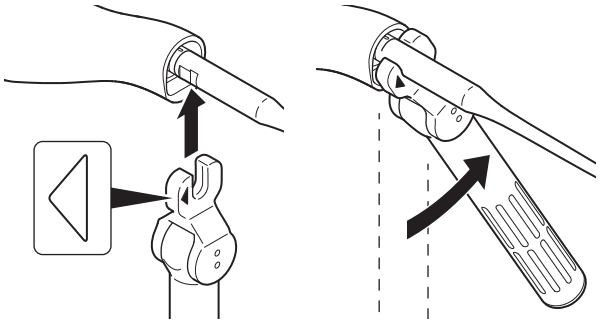

Figure 115 – Tip Loosening

Not Released
Production In Work

7. Manually remove the tip from the handpiece (Figure 116).

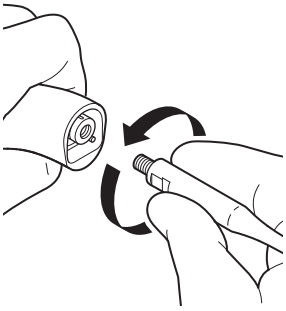

Figure 116 – Tip Removal

8. Dispose of the single use tip into an appropriate container. See *Section 13 Disposal/Recycle.*

6.4.2.2 To Initially Treat at Point of Use

NOTES:

- Initial treatment at point of use will facilitate later processing of the handpiece, torque wrench, and reusable cleaning wire.
- DO NOT use saline to wet or soak the handpiece or torque wrench. Failure to comply may result in corrosion.
- Apply a pretreatment foam to minimize the drying of soil and facilitate later processing. DO NOT allow pretreatment foam to dry on the equipment.

1. Use absorbent wipes to remove gross soil from the handpiece, handpiece cable, torque wrench, and reusable cleaning wire.
2. If transport to the decontamination area is delayed, cover the equipment with a damp cloth or spray the equipment with a pretreatment foam as often as necessary to maintain moisture.

6.4.2.3 To Transport to the Decontamination Area

1. Load the handpiece, torque wrench, and reusable cleaning wire into the Sonopet iQ Sterilization Tray (Figure 117) or the Aesculap Rigid Sterilization Container, if appropriate.

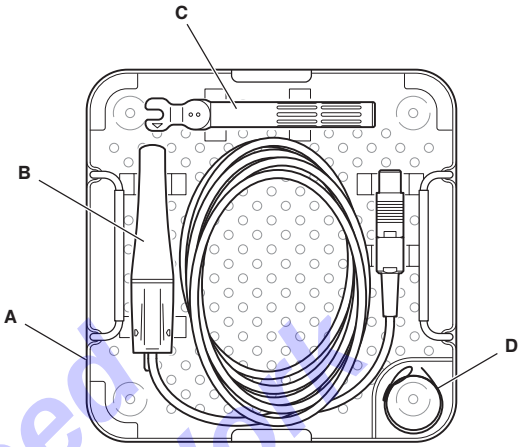

Figure 117 – Sterilization Tray Device Placement

A	Sonopet iQ Sterilization Tray
B	Sonopet iQ Universal Angled Handpiece
C	7 mm Step Torque Wrench
D	Cleaning Wire (reusable)

2. Transport the loaded tray or container to the decontamination area.
3. Clean the handpiece, torque wrench, and reusable cleaning wire as soon as practicable, typically within two hours, to preclude extended or repeat cleaning procedures.
4. Clean and sterilize the handpiece, torque wrench, and reusable cleaning wire. See the *Sonopet iQ Handpiece and Accessories Processing Instructions REF 5500-001-700* supplied with the console.

Not Released Production In Work

6.4.2.4 To Disconnect and Dispose of the Irrigation Suction Cassette

1. Press the EJECT button on the console and remove the irrigation suction cassette from the console (Figure 118).

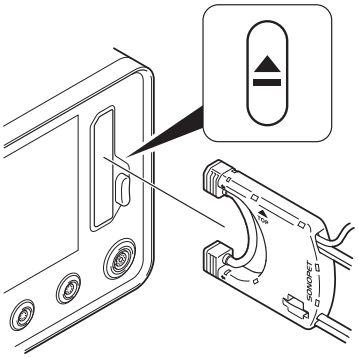

Figure 118 – Irrigation Suction Cassette Removal

2. Disconnect the suction tube connectors from the disposable suction canister (Figure 119).

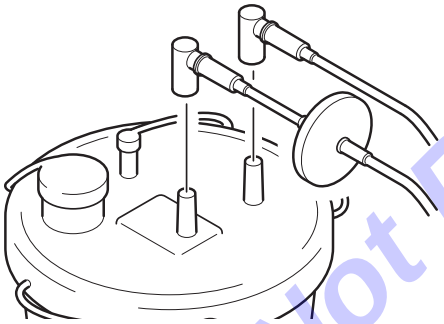

Figure 119 – Suction Canister Removal

3. Close all open canister ports to make sure the suction canister is sealed and will not leak surgical waste (Figure 120).

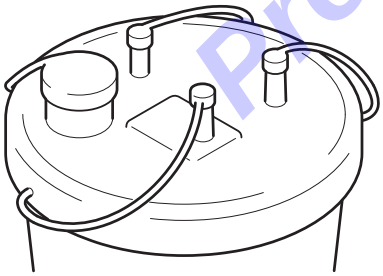

Figure 120 – All Suction Canister Ports Closed

5. Dispose of the single use suction canister in an appropriate container. See *Section 13 Disposal/ Recycle.*

6. Remove the irrigation tubing spike from the port of the collapsible irrigation fluid container or bag (Figure 121).

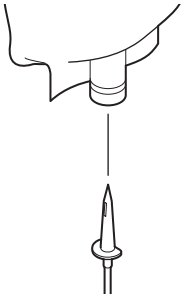

Figure 121 – Irrigation Bag Removal

7. Dispose of the single use irrigation suction cassette in an appropriate container. See *Section 13 Disposal/ Recycle.*

6.4.2.5 To Disconnect the Hand Controller

1. Disconnect the hand controller from the console (Figure 122).

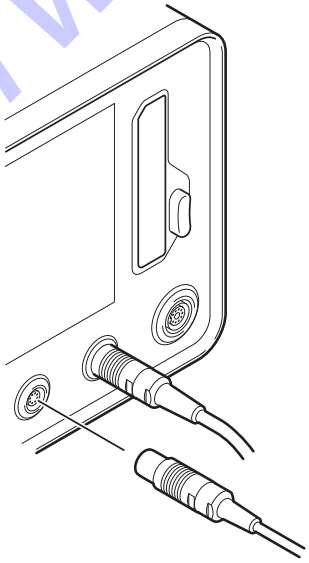

Figure 122 – Hand Controller Removal

Not Released
Production In Work

2. Remove the hand controller body from the sterile drape (Figure 123).

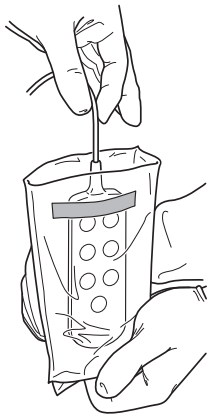

Figure 123 – Sterile Drape Removal

3. Dispose of the single use sterile drape in an appropriate container. See *Section 13 Disposal/ Recycle.*
4. Clean and disinfect the hand controller. See *Section 7 Cleaning and Disinfection*.

6.4.2.6 To Disconnect the Foot Pedal and Receiver

1. Disconnect the foot pedal cable connector or the wireless receiver from the console (Figure 124).

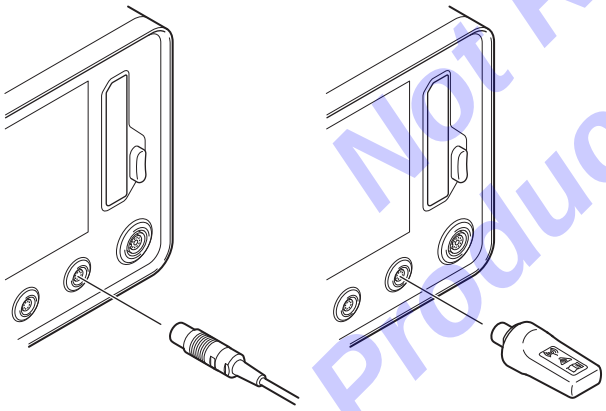

Figure 124 – Foot Pedal or Wireless Receiver Removal

2. If using a foot pedal with a toe loop, adjust the toe loop to the STORAGE position and wrap the cord around the toe loop as required (Figure 125).

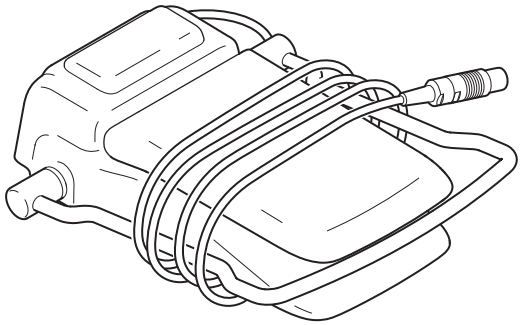

Figure 125 – Foot Pedal Cord Wrap

3. Clean and disinfect the foot pedal and wireless receiver. See *Section 7 Cleaning and Disinfection*.

6.4.2.7 To Clean and Disinfect the Console

Clean and disinfect the console. See *Section 7 Cleaning and Disinfection*.

Not Released Production In Work

7 Cleaning and Disinfection

WARNINGS: INFECTION HAZARD

- ALWAYS provide personal protective equipment (PPE) for processing personnel according to the instructions and safety data sheets (SDS) supplied with the disinfectant. Wear PPE at all times during processing per facility protocol.
- Upon initial receipt and before each use, ALWAYS clean and disinfect the console, foot pedal, wireless receiver, and hand controller.
- ALWAYS clean and sterilize the handpiece, torque wrench, and reusable cleaning wire before first and every use. See the *Sonopet iQ Handpiece and Accessories Processing Instructions REF 5500-001-700* supplied with the console.

CAUTION: DO NOT immerse any component in liquid, unless otherwise directed. DO NOT allow liquids or moisture to enter any electrical connector or receptacle.

NOTES:

- DO NOT sterilize the console, power cord, foot pedal(s), wireless receiver, or hand controller.
- DO NOT use an aerosol spray directly on the console display screen.
- DO NOT use solvents, lubricants, or other chemicals, including glutaraldehyde or similar chemical cleaners, unless otherwise specified. Use of unapproved processing chemicals may cause equipment damage.

7.1 Recommended Equipment and Materials

- PPE as recommended by the disinfectant supplier per the healthcare facility protocol
- Soft, non-linting cloth
- Glass cleaner
- Quaternary Ammonium Based Disinfectant - CaviCide (EPA Reg. #46781-6) or CaviWipes (EPA Reg. #46781-8); validated disinfectant for use on the exterior of the console, power cord, foot pedal(s), wireless receiver, and hand controller.
- Sodium Hypochlorite Based Disinfectant - Clorox Clean-up Disinfectant Cleaner with Bleach (EPA Reg. #67619-17); validated disinfectant for use on the exterior of the console, power cord, foot pedal(s), wireless receiver, and hand controller.

7.2 To Clean and Disinfect the Power Cord, Foot Pedal(s), Wireless Receiver, and Hand Controller

1. Wipe all external surfaces of the equipment with a soft, non-linting cloth moistened with a non-abrasive, hospital disinfectant prepared according to the manufacturer's instructions. Clean all surfaces, including the foot pedal and hand controller cables, until all visible soil is removed.
2. Wipe critical areas such as the foot pedal treadle, irrigation flush button, and any other areas that may be soiled (Figure 126).
3. Actuate any moving parts such as the foot pedal treadle to access hidden surfaces.

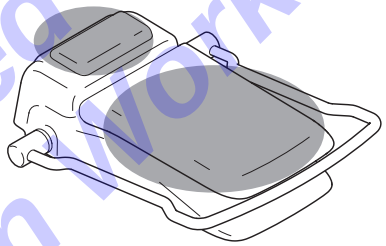

Figure 126 – Foot Pedal Critical Wipe Down Areas

4. After removing all visible, gross soil, use a clean cloth moisten with disinfectant and wipe all surfaces, including the foot pedal and hand controller cables.
5. Make sure all surfaces remain visibly wet at room temperature for at least the minimum time specified by the disinfectant manufacturer's instructions.
6. Remove any excess disinfectant solution using a soft, non-linting cloth moistened with water if required by the disinfectant manufacturer's instructions.
7. Inspect the equipment. See *Section 8 Inspection and Maintenance*.

Not Released Production In Work

7.3 To Clean and Disinfect the Console

1. Wipe all external surfaces of the console, including the irrigation pole, with a soft, non-linting cloth moistened with a non-abrasive, hospital disinfectant prepared according to the manufacturer's instructions. Clean surfaces until all visible soil is removed.
2. Wipe critical areas such as the power button, the display screen, the eject button, and any other areas that may be soiled (Figure 127).

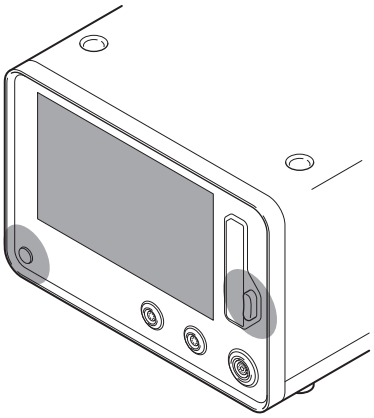

Figure 127 – Console Critical Wipe Down Areas

3. After removing all visible, gross soil, use a clean cloth moistened with disinfectant and wipe all surfaces.
4. Make sure all surfaces remain visibly wet at room temperature for at least the minimum time specified by the disinfectant manufacturer's instructions.
5. Remove any excess disinfectant solution using a soft, non-linting cloth moistened with water if required by the disinfectant manufacturer's instructions.
6. Apply glass cleaner to a soft, non-linting cloth and wipe the console display screen.
7. Inspect the console. See *Section 8 Inspection and Maintenance*.

Not Released
Production In Work

8 Inspection and Maintenance

8.1 To Inspect the Equipment

WARNINGS:

- Upon initial receipt and before each use, ALWAYS inspect each component for damage. DO NOT use any equipment if damage is apparent or the inspection criteria are not met.
- ALWAYS comply with the inspection interval to ensure the safe and effective use of the equipment. See *Table 24 Inspection Criteria and Actions.*

NOTES:

- Only biomedical equipment technicians trained and experienced in the maintenance of this reusable medical device should inspect and maintain this equipment.
- If any component must be disposed of at the end of its useful life, see *Section 13 Disposal/Recycle*.

Table 24 – Inspection Criteria and Actions

INTERVAL	CRITERIA	ACTION
Before each use and after each cleaning and disinfection.	Inspect the equipment for damage or missing components.	If damage is apparent, replace the equipment. See *Section 3.3 For Use With.* See *Section 12 Service*.
	Inspect the equipment for corrosion, discoloration, pitting, cracked materials, or unacceptable deterioration on any external surfaces, including on-product labels.	
	Inspect the power cord and cables for cuts.	
	Inspect the power cord plug, cable connectors, and the wireless receiver connector for bent pins.	
	Inspect the power cord connector receptacle and the cable connector ports for damage.	
	Make sure the console, foot pedal(s), and hand controller operate correctly.	

Not Released Production In Work

8.2 To Replace the Wireless Foot Pedal Batteries

See *Section 6.1.10.1 To Install or Replace the Batteries (Wireless Advanced Foot Pedal Only)*. See *Section 14.8 Foot Pedal(s) and Wireless Receiver Specifications*.

8.3 To Perform Functional Check Procedure (Optional)

1. To perform system set up, see *Section 6.2 Before the Procedure*. To respond to error messages, see *Section 11 Pop-up Codes, Messages, and Corrective Actions*.
2. Operate the handpiece for ten (10) seconds using the default tip settings for power, suction, and irrigation. To respond to error messages, see *Section 11 Pop-up Codes, Messages, and Corrective Actions*.

9 Storage and Transport

CAUTION: ALWAYS store and transport the equipment within the specified environmental condition values throughout its useful life. See *Section 14 Specifications*.

Not Released
Production In Work

10 Troubleshooting

CONDITION	CAUSE	RECOMMENDED ACTION
No power at the console (display screen and power button are off)	The console is not connected to facility power or the power cord plugs are not completely installed.	Make sure the console power cord is connected to a hospital-grade, facility power receptacle with protective earth (ground). See *Section 6.2.1.1 To Connect Console Power.*
		Make sure the power cord plugs are seated correctly.
	The console power receptacle fuse(s) are open (blown).	DO NOT use the console. Contact Stryker Customer Service. See *Section 12 Service*.
	Electrical power at the hospital-grade, facility power receptacle is not present.	Make sure electrical power is present at the hospital-grade, facility power receptacle.
Power interruption to the console	The power cord is disconnected from facility power.	Make sure the console power cord is connected to a hospital-grade, facility power receptacle with protective earth (ground). See *Section 6.2.1.1 To Connect Console Power.*
	Electrical power at the hospital-grade facility power receptacle is lost.	Restore electrical power to the hospital-grade, facility power receptacle.
Erratic system behavior while equipment is in use	Electrical noise and/or radio interference and/or high frequency (HF) surgical equipment is present.	Turn off all electrical equipment not in use in the operating room.
		Reorient or relocate electrical equipment to maximize the spatial distance between the equipment. Shielding the location may also be necessary.
		Connect the console and other operating room equipment to different hospital-grade power receptacles.

Not Released
Production In Work

CONDITION	CAUSE	RECOMMENDED ACTION
No apparent ultrasonic power at the tip	The power, suction, and irrigation values are not set correctly.	Adjust the power, suction, and irrigation values to the correct settings. See *Section 6.3.3 To Adjust Power, Suction, Irrigation, and Pulse Control (optional) Setting Values.*
	The tip and/or sleeve is installed incorrectly.	Install the tip and sleeve correctly. See *Section 6.2.3.3 To Transfer a Tip and Sleeve into the Sterile Field.*
	The tip and/or sleeve is worn, cracked, or damaged.	Inspect the tip and sleeve. If damage is apparent, replace the tip and sleeve. See *Section 6.3.7 To Inspect a Tip and Tip Sleeve.* See *Section 3.3 For Use With.* See *Section 6.3.8 To Replace a Tip and Sleeve Set.*
	The foot pedal is not actuating correctly.	Make sure the wireless foot pedal is connected correctly. See *Section 6.2.2 To Connect the Foot Pedal.*
		Replace the foot pedal. See *Section 3.3 For Use With.*
	An object is lodged under the treadle of the foot pedal.	Remove any object lodged under the foot pedal treadle.
	The handpiece is damaged.	Replace the handpiece. Report error code to Stryker Customer Service. See *Section 12 Service*.
	The console is damaged.	The console requires service. Report error code to Stryker Customer Service. See *Section 12 Service*.

Not Released
Production In Work

CONDITION	CAUSE	RECOMMENDED ACTION
Interruption (or stalling) of ultrasonic power at the tip	The suction and irrigation values are not set correctly for the applied ultrasonic power.	Adjust the power, suction, and irrigation values to the correct settings. See *Section 6.3.3 To Adjust Power, Suction, Irrigation, and Pulse Control (optional) Setting Values.*
	The handpiece and/or tip is clogged.	Use the cleaning wire to remove the clog in the tip and/or handpiece suction lumen. See *Section 6.3.6 To Clear a Clogged Tip.*
		While suction is applied, briefly immerse the tip of the handpiece into sterile irrigation fluid to remove the clog.
	Excessive force is applied or an incorrect cutting angle is used.	Withdraw the tip from the target site. Allow the handpiece and tip to cool before use. Do not apply pressure to the tip during initial handpiece activation.
		If damage is apparent, replace the tip and sleeve. See *Section 3.3 For Use With.* See *Section 6.2.3.3 To Transfer a Tip and Sleeve into the Sterile Field.*
	The tip is worn, cracked, or damaged.	Inspect the tip and sleeve for damage. If damage is apparent, replace the tip and sleeve. See *Section 3.3 For Use With.* See *Section 6.2.3.3 To Transfer a Tip and Sleeve into the Sterile Field.*
	The tip is installed incorrectly.	Install the tip and sleeve correctly. See *Section 6.2.3.3 To Transfer a Tip and Sleeve into the Sterile Field.*
	The handpiece is damaged.	Replace the handpiece. Report error code to Stryker Customer Service. See *Section 12 Service*.
	The console is damaged.	The console requires service. Report error code to Stryker Customer Service. See *Section 12 Service*.
Insufficient aspiration (suction) at the tip	The tubing of the irrigation suction cassette is pinched, kinked, clogged, or damaged.	Straighten the tubing to remove a kink or anything that might pinch the tubing.
		Inspect the suction tubing along its entire length for any clogs or obstructions. Squeeze the blocked tubing area to loosen the obstruction.
		Disconnect, clean, and reconnect the handpiece tubing connector at the handpiece.
		Inspect the tubing for damage. If damage is apparent, replace the irrigation suction cassette. See *Section 3.3 For Use With.* See *Section 6.2.4 To Install the Irrigation Suction Cassette.*

Not Released Production In Work

CONDITION	CAUSE	RECOMMENDED ACTION
Insufficient aspiration (suction) at the tip	The handpiece and/or tip is clogged.	Use the cleaning wire to remove the clog in the tip and/or handpiece suction lumen. See *Section 6.3.6 To Clear a Clogged Tip.*
		While suction is on, briefly immerse the tip of the handpiece into sterile irrigation fluid to remove the clog.
	The handpiece tubing connector is clogged or installed on the handpiece incorrectly.	Disconnect, clean, and reconnect the handpiece tubing connector to the handpiece.
		Make sure the handpiece tubing connector is installed to the handpiece correctly.
	The suction value is not set correctly.	Adjust the suction value to the correct setting. See *Section 6.3.3 To Adjust Power, Suction, Irrigation, and Pulse Control (optional) Setting Values.*
	The suction canister lid is not installed correctly.	Install the suction canister lid correctly. See the instructions for use supplied with the suction canister.
	The connections on the suction canister lid are not seated or installed correctly.	Install the connections on the suction canister lid correctly. See *Section 6.2.4 To Install the Irrigation Suction Cassette.*
	Unused ports on the suction canister are open.	Close any unused ports on the suction canister.
	The suction canister is full.	Replace the suction canister. See *Section 3.3 For Use With.* See *Section 6.2.1.2 To Install the Fluid Waste Suction Canister.*
	The suction canister is damaged.	Inspect the suction canister for damage. If damage is apparent, replace the suction canister. See *Section 3.3 For Use With.* See *Section 6.2.1.2 To Install the Fluid Waste Suction Canister.*
	The suction canister has not had time to build up a vacuum.	Allow the suction canister more time to build up a vacuum.
	The filter inside the suction canister lid is clogged or wet.	Replace the suction canister and lid. See *Section 3.3 For Use With.* See the instructions for use supplied with the suction canister.
	The irrigation suction cassette filter is clogged or wet.	Replace the irrigation suction cassette. See *Section 3.3 For Use With.* See *Section 6.2.4 To Install the Irrigation Suction Cassette.*
	The irrigation suction cassette is damaged.	Replace the irrigation suction cassette. See *Section 3.3 For Use With.* See *Section 6.2.4 To Install the Irrigation Suction Cassette.*
	The console is damaged.	The console requires service. Report error code to Stryker Customer Service. See *Section 12 Service*.

Not Released Production In Work

CONDITION	CAUSE	RECOMMENDED ACTION
Insufficient irrigation at the tip	The irrigation cassette tube is connected to a rigid, non-collapsible irrigation container.	Remove the non-collapsible irrigation container. Connect the irrigation tube to a collapsible, irrigation container. See *Section 6.2.4 To Install the Irrigation Suction Cassette.*
	The irrigation cassette tube is not connected to a collapsible irrigation container.	Connect the irrigation tube to a collapsible irrigation container. See *Section 6.2.4 To Install the Irrigation Suction Cassette.*
	The irrigation flow rate value is not set correctly.	Adjust the irrigation flow rate value to the proper setting. See *Section 6.3.3 To Adjust Power, Suction, Irrigation, and Pulse Control (optional) Setting Values.*
	The irrigation cassette tube is pinched, kinked, or damaged.	Straighten the irrigation tube to remove a kink or anything that might pinch the tubing.
		Inspect the irrigation tube for damage. If damage is apparent, replace the irrigation suction cassette. See *Section 3.3 For Use With.* See *Section 6.2.4 To Install the Irrigation Suction Cassette.*
	The collapsible irrigation container is empty.	Replace the collapsible irrigation container. See *Section 3.3 For Use With.* See *Section 6.2.1.3 To Hang the Collapsible Irrigation Container.*
	The tip sleeve is damaged.	If damage is apparent, replace the tip and sleeve. See *Section 3.3 For Use With.* See *Section 6.2.3.3 To Transfer a Tip and Sleeve into the Sterile Field.*
	The handpiece tubing connector is attached to the handpiece incorrectly.	Make sure the handpiece tubing connector is attached to the handpiece correctly. See *Section 6.2.4.3 To Connect the Handpiece Tubing Connector (Inside Sterile Field).*
	The handpiece irrigation lumen is clogged or damaged.	Inspect the handpiece irrigation lumen for clogging and remove as required. If damage is apparent, replace the handpiece. See *Section 12 Service*.
	The irrigation cassette tube is damaged.	If damage is apparent, replace the irrigation suction cassette. See *Section 3.3 For Use With.* See *Section 6.2.4 To Install the Irrigation Suction Cassette.*
	The irrigation suction cassette is damaged and/or leaking.	
	The console is damaged.	The console requires service. Report error code to Stryker Customer Service. See *Section 12 Service*.

Not Released
Production In Work

CONDITION	CAUSE	RECOMMENDED ACTION
Excessive misting at the tip	The irrigation flow rate value is not set correctly.	Adjust the irrigation flow rate value to the correct setting. See *Section 6.3.3 To Adjust Power, Suction, Irrigation, and Pulse Control (optional) Setting Values.*
	The suction value is not set correctly.	Adjust the suction value to the correct setting. See *Section 6.3.3 To Adjust Power, Suction, Irrigation, and Pulse Control (optional) Setting Values.*
	The handpiece and/or tip is clogged.	Use the cleaning wire to remove the clog in the tip and/or handpiece suction lumen. See *Section 6.3.6 To Clear a Clogged Tip.*
		While suction is on, briefly immerse the tip of the handpiece into sterile irrigation fluid to remove the clog.
	The tubing of the irrigation suction cassette is pinched, kinked, clogged, or damaged.	Straighten the tubing to remove a kink or anything that might pinch the tubing.
		Inspect the suction tubing along its entire length for any clogs or obstructions. Squeeze the blocked tubing area to loosen the obstruction.
		Disconnect, clean, and reconnect the handpiece tubing connector at the handpiece.
		Inspect the tubing for damage. If damage is apparent, replace the irrigation suction cassette. See *Section 3.3 For Use With*. See *Section 6.2.4 To Install the Irrigation Suction Cassette.*
	The connections on the suction canister lid are not seated or installed correctly.	Install the connections on the suction canister lid correctly. See *Section 6.2.4.2 To Connect the Suction Canister, Cassette, and Irrigation Tubing (Outside Sterile Field)*.
	Unused ports on the suction canister are open.	Close any unused ports on the suction canister.
	The suction canister is full.	Replace the suction canister. See *Section 3.3 For Use With*. See *Section 6.2.1.2 To Install the Fluid Waste Suction Canister.*
Excessive irrigation at the tip of the handpiece or the irrigation fails to stop	The console is damaged.	The console requires service. Report error code to Stryker Customer Service. See *Section 12 Service*.

Not Released
Production In Work

11 Pop-up Codes, Messages, and Corrective Actions

NOTE: An error message will remain displayed if service is required. See *Section 12 Service*.

Table 25 – Error Codes, Messages, and Corrective Actions

CODE	TITLE - MESSAGE	CORRECTIVE ACTION
00FF0004	Tip Sleeve Disconnected Notification - The tip sleeve has been removed. Install the tip sleeve to the handpiece.	See *Section 6.2.3.3 To Transfer a Tip and Sleeve into the Sterile Field.*
00FF0006	Handpiece Disconnected Notification - The handpiece is disconnected. Connect the handpiece to the console.	See *Section 6.2.3.2 To Connect the Handpiece to the Console (Outside Sterile Field).*
00FF0007	Foot Pedal Disconnected Notification - The foot pedal is disconnected. Connect the foot pedal to the console.	See *Section 6.2.2 To Connect the Foot Pedal.*
00FF0008	Cassette Removed Notification - The cassette has been removed. Install the cassette into the console.	See *Section 6.2.4 To Install the Irrigation Suction Cassette.*
00FF0009	Output Disabled Notification - Suction must be ON (greater than 0%) to activate the handpiece.	Touch the OK button (screen) or push the Irrigation Flush button (foot pedal) or push the Prime Flush button (hand controller) to close the notification. Make sure the aspiration (suction) value is greater than 0%.
00000010	Hand Controller Error - Report error code to Stryker.	Console cannot communicate with the hand controller. See *Section 12 Service*.
00000011	Hand Controller Error - Release the hand controller button(s) to continue.	DO NOT press any hand controller button(s) when connecting the hand controller to the console.
00000012	Hand Controller Error - Report error code to Stryker.	Hand controller is not compatible with console software. See *Section 12 Service*.
00000020	Foot Pedal Error - Release the foot pedal treadle to continue.	DO NOT press the foot pedal treadle when connecting the foot pedal to the console.
00000021	Foot Pedal Error - Release the foot pedal flush button to continue.	DO NOT press the foot pedal flush button when connecting the foot pedal to the console.
00000022	Foot Pedal Error - Release the foot pedal treadle to continue.	DO NOT press foot pedal treadle when handpiece functional output is disabled.
00000030	Wireless Foot Pedal Error - Wireless foot pedal did not connect to system. 1. Make sure the foot pedal is less than 2 meters (6 feet) from the console. 2. Make sure the WIRELESS/ON/OFF power switch on the foot pedal is in the PAIR WIRELESS position until the indicator lamps on the foot pedal blink. 3. If the error persists, report the error code to Stryker Customer Service.	See *Section 6.2.2 To Connect the Foot Pedal.* If necessary, report the error code. See *Section 12 Service*.
00000100	Console Functional Error - Report error code to Stryker Customer Service.	See *Section 12 Service*.
00000102	Audio Error - Console has encountered an internal audio error, but is still functional for surgery. Please contact Stryker Customer Service for repair.	

Not Released Production In Work

CODE	TITLE - MESSAGE	CORRECTIVE ACTION
00001001	Console Functional Error - Report error code to Stryker Customer Service.	See *Section 12 Service*.
00001002		
00001003		
00002001		
00002002		
00002003		
00003001		
00003003		
00003004		
00003008		
00003009		
0000300A		
0000300C		
00050010		
00050012	Port Ring Indicator Error - Console has encountered a port ring indicator error, but is still functional for surgery. Please contact Stryker Customer Service for repair.	
00050013	Hand Controller Error - Console has encountered a hand controller error, but is still functional for surgery. Please contact Stryker Customer Service for repair.	
00050014	Audio Error - Console has encountered an internal audio error, but is still functional for surgery. Please contact Stryker Customer Service for repair.	
00050020	Console Functional Error - Report error code to Stryker Customer Service.	
00050021	Console Functional Error - Console has encountered an internal error, but is still functional for surgery. Please contact Stryker Customer Service for repair.	
00050022	Console Functional Error - Console has encountered a port ring indicator error, but is still functional for surgery. Please contact Stryker Customer Service for repair.	
00050023	Console Functional Error - Console has encountered a hand controller error, but is still functional for surgery. Please contact Stryker Customer Service for repair.	

Not Released
Production In Work

CODE	TITLE - MESSAGE	CORRECTIVE ACTION
00050024	Console Functional Error - Console has encountered an internal audio error, but is still functional for surgery. Please contact Stryker Customer Service for repair.	See *Section 12 Service*.
00050030	Console Functional Error - Report error code to Stryker Customer Service.	
00050031	Console Functional Error - Console has encountered an internal error, but is still functional for surgery. Please contact Stryker Customer Service for repair.	
00050032	Console Functional Error - Console has encountered a port ring indicator error, but is still functional for surgery. Please contact Stryker Customer Service for repair.	
00050033	Console Functional Error - Console has encountered a hand controller error, but is still functional for surgery. Please contact Stryker Customer Service for repair.	
00050034	Console Functional Error - Console has encountered an internal audio error, but is still functional for surgery. Please contact Stryker Customer Service for repair.	
00050040	Console Functional Error - Report error code to Stryker Customer Service.	
000500D0	Console Functional Error - Console has encountered an internal error, but is still functional for surgery. Please contact Stryker Customer Service for repair.	
000500E1	Handpiece Error - The handpiece is not working properly. Replace the handpiece. If the error persists, contact Stryker Customer Service.	See *Section 3.3 For Use With.* If necessary, report the error code. See *Section 12 Service*.
00050101	Tip Error - The tip is not working properly. Replace the tip and sleeve set. If the error persists, contact Stryker Customer Service.	See *Section 3.3 For Use With.* See *Section 6.2.3.3 To Transfer a Tip and Sleeve into the Sterile Field.* If necessary, report the error code. See *Section 12 Service*.
00050102	Handpiece Error - The handpiece is not working properly. Replace the handpiece. If the error persists, contact Stryker Customer Service.	See *Section 3.3 For Use With.* If necessary, report the error code. See *Section 12 Service*.
00050103	Cassette Error - The cassette is not working properly. Replace the cassette. If the error persists, contact Stryker Customer Service.	See *Section 3.3 For Use With.* See *Section 6.2.4 To Install the Irrigation Suction Cassette.* If necessary, report the error code. See *Section 12 Service*.
00050104	Unknown Device Error - An unknown device has been detected. Disconnect the device. If the error persists, contact Stryker Customer Service.	If necessary, report the error code. See *Section 12 Service*.
00050201	Console Functional Error - Report error code to Stryker Customer Service.	See *Section 12 Service*.
00050203	Storage Device Error - An unrecognized storage device has been detected. Reconnect or use a different storage device.	If the error persists, report the error code to Stryker Customer Service. See *Section 12 Service*.

Not Released
Production In Work

CODE	TITLE - MESSAGE	CORRECTIVE ACTION
00050204	Console Functional Error - Report error code to Stryker Customer Service.	See *Section 12 Service*.
00050205	Port Ring Indicator Error - Console has encountered a port ring indicator error, but is still functional for surgery. Please contact Stryker Customer Service for repair.	
00050206	Console Functional Error - The cassette ejection button appears to be stuck. If holding in, release to continue. SYNC mode is currently disabled. If the error persists, contact Stryker Customer Service.	If necessary, report the error code. See *Section 12 Service*.
00050501	Tip Error - The tip and sleeve life cycle has expired. Replace the tip and sleeve set.	See *Section 3.3 For Use With.* See *Section 6.2.3.3 To Transfer a Tip and Sleeve into the Sterile Field.*
00050502	Cassette Error - The cassette life cycle has expired. Replace the cassette.	See *Section 3.3 For Use With.* See *Section 6.2.4 To Install the Irrigation Suction Cassette.*
00050503	Tip Error - The tip and sleeve set is not supported by the current configuration of console software. Select a different type of tip and sleeve set. Contact Stryker Customer Service.	See *Section 6.2.3.3 To Transfer a Tip and Sleeve into the Sterile Field.* Report the error code. See *Section 12 Service*.
00050504	Handpiece Error - The handpiece is not supported by the current configuration of console software. Contact Stryker Customer Service.	Report error code to Stryker Customer Service. See *Section 12 Service*.
00050505	Cassette Error - The cassette is not supported by the current configuration of console software. Contact Stryker Customer Service.	
00050506	Tip Error - The handpiece does not support the functionality required by the attached tip. Contact Stryker Customer Service.	
00050507	Tip Error - The tip and sleeve set is not supported by the current configuration of console software. Select a different type of tip and sleeve set. Contact Stryker Customer Service.	See *Section 3.3 For Use With.* See *Section 6.2.3.3 To Transfer a Tip and Sleeve into the Sterile Field.* Report error code to Stryker Customer Service. See *Section 12 Service*.
00050508	Handpiece Error - The handpiece is not supported by the current configuration of console software. Contact Stryker Customer Service.	Report error code to Stryker Customer Service. See *Section 12 Service*.
00050509	Cassette Error - The cassette is not supported by the current configuration of console software. Contact Stryker Customer Service.	

Not Released
Production In Work

CODE	TITLE - MESSAGE	CORRECTIVE ACTION
00060000	Console Functional Error - Report error code to Stryker Customer Service.	See *Section 12 Service*.
00060003		
00060004		
00060005		
00060006		
00060007		
00060008		
00060009		
0006000A		
0006000B		
0006000C		
0006000D		
00060100		
00060101		
00060102		
00060103		
00060104		
00060105		
00060106		
00060107		
00060108		
00060200		
00060201		
00060202		
00060203		
00060204		
00060300	Foot Pedal Error - The foot pedal is not working properly. Replace the foot pedal. If the error persists, contact Stryker Customer Service.	See *Section 3.3 For Use With.* If necessary, report the error code. See *Section 12 Service*.
00060301		
00060302	Wireless Foot Pedal Error - The wireless foot pedal is not detected. Make sure the foot pedal is turned on. Make sure the foot pedal indicator lamps are lit and the batteries are fully charged. Make sure the wireless foot pedal is connected to the console.	See *Section 6.2.2 To Connect the Foot Pedal.*
00060303		
00060304	Foot Pedal Error - The foot pedal is not working properly. Replace the foot pedal. If the error persists, contact Stryker Customer Service.	See *Section 3.3 For Use With.* If necessary, report the error code. See *Section 12 Service*.
00060305		
00060306		
00060307	Wireless Foot Pedal Error - The wireless foot pedal must be connected to the console wireless receiver.	See *Section 6.2.2 To Connect the Foot Pedal.*
00060308	Wireless Foot Pedal Notification - The battery power of the wireless foot pedal is low. Replace the batteries as soon as possible	See *Section 6.1.10.1 To Install or Replace the Batteries (Wireless Foot Pedal Only).*

Not Released
Production In Work

CODE	TITLE - MESSAGE	CORRECTIVE ACTION
00060309	Wireless Foot Pedal Error - Replace the wireless foot pedal batteries to continue.	See *Section 6.1.10.1 To Install or Replace the Batteries (Wireless Foot Pedal Only).*
0006030A		
0006030B	Wireless Foot Pedal Error - The wireless foot pedal is not working properly. Replace the wireless foot pedal. If the error persists, contact Stryker Customer Service.	See *Section 3.3 For Use With.* If necessary, report the error code. See *Section 12 Service*.
0006030C	Foot Pedal Error - The foot pedal is not working properly. Replace the foot pedal. If the error persists, contact Stryker Customer Service.	See *Section 3.3 For Use With.* If necessary, report the error code. See *Section 12 Service*.
00060400	Console Functional Error - Report error code to Stryker Customer Service.	See *Section 12 Service*.
00060401		
00060402		
00060403		
00060404		
00060406		
00060407		
00060408		
00060409		
0006040A		
0006040B		
0006040C		
00070030		
00070031		
00070032		
00070033		
00070034	Console Functional Error - Report error code to Stryker Customer Service.	See *Section 12 Service*.
00070035		
00070036		
00070037		
00070038		
00070039		
00070006		
00070007		
00070009		
0007000B		
0007000D		
0007000E		
0007000F		
00070010		
00070011		
00070012		

Not Released
Production In Work

CODE	TITLE - MESSAGE	CORRECTIVE ACTION
00070015 00070016	Handpiece Frequency Drift Notification - A handpiece power issue was detected. Release the foot pedal treadle, then press the treadle again to continue.	If the error persists, report the error code. See *Section 12 Service*.
00070017 00070018	Handpiece Capacitor Sense Notification - The handpiece is not working properly. Replace the handpiece. If the error persists, contact Stryker Customer Service.	If necessary, report the error code. See *Section 12 Service*.
0007001A 0007001B 0007001C 0007001D	Console Functional Error - Report error code to Stryker Customer Service.	See *Section 12 Service*.
0007001E	Handpiece Error - The handpiece is not working properly. Replace the handpiece. If the error persists, contact Stryker Customer Service.	See *Section 3.3 For Use With.* If necessary, report the error code. See *Section 12 Service*.
00070020 00070103	Console Functional Error - Report error code to Stryker Customer Service.	See *Section 12 Service*.
00071011	Output Disabled - The system and/or handpiece is not working properly. If the error persists, contact Stryker Customer Service.	If the error persists, report the error code. See Section 12 Service.

Not Released
Production In Work

12 Service

WARNINGS:

- DO NOT disassemble, modify, service, or repair any equipment without the authorization of the manufacturer.
- ALWAYS process (clean, disinfect, and sterilize if required) all potentially contaminated equipment BEFORE returning to Stryker. Stryker will not accept or process any potentially contaminated equipment.

NOTES:

- Maintenance documentation for this equipment is only available to Stryker-authorized service personnel.
- For service information, contact your Stryker sales representative or call Stryker customer service. See *Section 1.3 Contact Information*.

1. Contact your local Stryker service center to obtain a repair purchase order BEFORE sending a product return directly to the center.
2. To expedite your processing, ALWAYS include the following information with your product return:
   - Contact name
   - Contact address
   - Contact phone number
   - Repair purchase order number
   - Part number(s)
   - Serial number(s)
   - Detailed reason for return

13 Disposal/Recycle

WARNINGS:

- ALWAYS follow the current local regulations governing the safe handling and disposal of sharps.
- ALWAYS follow the current local regulations governing biohazard waste to safely handle and dispose of surgical waste.
- ALWAYS follow the current local recommendations and/or regulations governing environmental protection and the risks associated with recycling or disposing of the equipment at the end of its useful life.

	To comply with European Community Waste Electrical and Electronic Equipment (WEEE) Directive 2012/19/EU, the console, handpiece, foot pedal, and hand controller should be collected separately for recycling. Do not dispose of as unsorted municipal waste. Contact local distributor for disposal information. Contaminated equipment should be cleaned and disinfected before recycling.
	To comply with European Community Batteries Directive 2006/66/EC, the console and wireless foot pedal are designed for safe removal of the batteries by the end user. Contaminated equipment should be cleaned and disinfected before recycling.
	To comply with Taiwan Environmental Protection Administration regulations, please recycle waste batteries (console and wireless foot pedal).
无汞	No Mercury: (less than) <0.0001% of Battery Weight
Perchlorate Material - special handling may apply. See www.dtsc.ca.gov/hazardouswaste/perchlorate	

NOTE: Contact your Stryker sales representative to obtain recycling instructions (passport) to facilitate the proper disposal of the console, handpiece, foot pedals, and hand controller at the end of its useful life. See *Section 1.3 Contact Information*.

Not Released Production In Work

13.1 Console

China RoHS Standard SJ/T 11364

To comply with China RoHS Standard SJ/T 11364, this device has been marked with the environmentally-friendly use period (EFUP) number, measured in years. The device contains at least one of the listed hazardous substances above threshold.

China RoHS Disclosure Report

REF 5500-050-000

Part Name	Hazardous Substances					
	Lead (Pb)	Mercury (Hg)	Cadmium (Cd)	Hexavalent Chromium (Cr (VI))	Polybrominated biphenyls (PBB)	Polybrominated diphenyl ethers (PBDE)
Electronic Circuit Boards	X	O	O	O	O	O
Irrigation Pole Fastener	X	O	O	O	O	O

This table is prepared in accordance with the provisions of SJ/T11364.
O: Indicates that said hazardous substance contained in all of the homogenous materials for this part is below the limit requirement of GB/T26572.
X: Indicates that said hazardous substance contained in at least one of the homogenous materials used for this part is above the limit requirement of GB/T26572.
(Enterprises may further provide in this box technical explanation for marking “X” based on their actual circumstances.)

13.2 Handpiece

China RoHS Standard SJ/T 11364

To comply with China RoHS Standard SJ/T 11364, this device has been marked with the environmentally-friendly use period (EFUP) number, measured in years. The device contains at least one of the listed hazardous substances above threshold.

China RoHS Disclosure Report

REF 5500-255-000

Part Name	Hazardous Substances					
	Lead (Pb)	Mercury (Hg)	Cadmium (Cd)	Hexavalent Chromium (Cr (VI))	Polybrominated biphenyls (PBB)	Polybrominated diphenyl ethers (PBDE)
Transducer	X	O	O	O	O	O
Connector	X	O	O	O	O	O

This table is prepared in accordance with the provisions of SJ/T11364.
O: Indicates that said hazardous substance contained in all of the homogenous materials for this part is below the limit requirement of GB/T26572.
X: Indicates that said hazardous substance contained in at least one of the homogenous materials used for this part is above the limit requirement of GB/T26572.
(Enterprises may further provide in this box technical explanation for marking “X” based on their actual circumstances.)

Not Released Production In Work

13.3 Tip/Sleeve and Irrigation Suction Cassette

WARNINGS:

- DO NOT reuse, reprocess, or repackage this equipment which is intended for single use only.
  - A single use device may not withstand chemical, chemical vapor, or high temperature sterilization reprocessing.
  - Design features may make cleaning difficult.
  - Reuse may create a contamination risk and compromise structural integrity resulting in operational failure.
  - Critical product information may be lost during repackaging.

  Failure to comply may lead to infection or cross infection and result in patient and/or healthcare staff injury.
- After the packaging is opened, discard any unused tip and sleeve set or irrigation suction cassette. An unused tip and sleeve set or irrigation suction cassette cannot be reused, reprocessed, resterilized, or repackaged.

China RoHS Standard SJ/T 11364

No Hazard Substances (green): The equipment contains no hazardous substances.

13.4 Foot Pedal(s) and Hand Controller

China RoHS Standard SJ/T 11364

No Hazard Substances (green): The equipment contains no hazardous substances.

Not Released
Production In Work

14 Specifications

14.1 Console Specifications

Model:		Sonopet iQ Ultrasonic Aspirator Console
REF (catalog number):		5500-050-000
Dimensions:	**Width:**	33.02 cm
	Height:	23.37 cm
	Depth:	44.20 cm
Mass (weight):		18.28 kg
Material:		In accordance with the European REACH regulation and other environmental regulatory requirements, components within the console pack contain Lead, CAS No. 7439-92-1, Dimethoxyethane, CAS No. 110-71-4, Diboron trioxide, CAS No. 1303-86-2, Lead Monoxide (Oxide), CAS No. 1317-36-8, and Lead Titanium Trioxide, CAS No. 12060-00-3. The manifold hoses within the console contain 2-(2H-benzotriazol-2-yl)-4,6-ditertpentylphenol, CAS No. 25973-55-1. This declaration is made in good faith and is either based on a technical evaluation, supplier data and/or laboratory testing.
Ingress (enclosure) Protection:		IPX0
Equipment Type:		Class 1 Type CF applied part
Power Supply:	**Input voltage:**	100-240 V ~ 50/60 Hz; 6-3 A
Ground Type:		Protective earth (ground); when connected to facility power
Fuses:	**Type:**	2 x 6.3 A
	Rating:	250 VAC
	Size:	5 x 20 mm
	Breaking Capacity:	(F) Fast-Acting (L) Low Breaking Capacity 63 A at 250 VAC, IEC 60127
Mode of Operation:		Continuous operation with intermittent loading
Duty Cycle:		See *Table 20 Tip and Sleeve Duty Cycle*. See *Section 16 Glossary.*

Environmental Conditions:	**Operation**	**Storage and Transportation**
Temperature Limitation:	10 °C – 27 °C	- 20 °C – 40 °C
Relative Humidity Limitation:	10 % – 85 %	10 % – 75 %
Atmospheric Pressure Limitation:	70 *kPa* – 106 *kPa*	50 *kPa* – 106 *kPa*

Four (4) Channel RFID Module:		
	Frequency of Operation:	13.56 MHz
	RF Bandwidth:	13.553 MHz - 13.567 MHz
	Modulation:	ASK
	RF Field Strength:	67.92 dBµV/m at 3 m

Not Released Production In Work

Product Safety Certification:	C US	CSA Group certification mark for United States and Canada. These products were tested and meet medical electrical equipment certification requirements, including compliance with applicable 60601 series standards. For additional information, contact Stryker.
Regulatory Compliance:	**European Conformity**	CE 2797
	Australian Communications and Media Authority (ACMA)	The Regulatory Compliance Mark (RCM) is a visible indication of a product's compliance with all applicable ACMA regulatory arrangements, including all technical and record-keeping requirements.

Federal Communications Commission (FCC) and Industry Canada (IC):

Contains: 4 Channel RFID Module
FCC ID: Q9R-5400052020 or Q9R-5500050000
IC: 4919A-5400052020 or 4919A-5500050000

This device complies with FCC Part 15 and IC license exempt RSS standard(s). Operation is subject to the following two conditions: (1) this device may not cause interference, and (2) this device must accept any interference, including interference that may cause undesired operation of the device.

Changes or modifications not expressly approved by Stryker Instruments could void your authority to operate this equipment.

Not Released
Production In Work

14.2 Power Cord Specifications (general)

Ratings:	
Current:	10 A
Voltage:	250 VAC minimum
Frequency:	50/60 Hz
Temperature:	0 ˚C to 70 ˚C minimum
Flammability:	UL 94 V-2 minimum, IEC 60332-1
Conductor:	
Size:	3 X 1.00 mm^2 ≤ size < 3 X 1.50 mm^2
Material:	Copper
Connector Type:	IEC 60320 C13
Plug Type:	The facility power (mains) plug shall have a ground/earthing pin.
Cord:	
Type:	SJT, H05VV-F, HVCTF, RVV or equivalent (unshielded)
Length:	3.0 m, 2.5 m **NOTE:** The 2.5 m cord is not for use in Canada or the US.
Dielectric Withstand:	1500 VAC for 60 seconds between line and protective earth, and between neutral and protective earth
Certification:	All applicable in-country medical electrical requirements

14.3 Power Cord Requirements (specific)

The Canadian and US power supply cord shall have a tag or label in English and French indicating that “GROUNDING RELIABILITY CAN ONLY BE ACHIEVED WHEN EQUIPMENT IS CONNECTED TO AN EQUIVALENT RECEPTACLE MARKED ‘HOSPITAL ONLY’ OR ‘HOSPITAL GRADE’ ” or equivalent wording.

Agency Approval: CSA Certified for Canada and US or UL Recognized for Canada and US.

14.4 Handpiece Specifications

Model:		Sonopet iQ Universal Angled Handpiece
REF (catalog number):		5500-255-000
Dimensions:	**Housing:**	12.4 cm length x 3.0 cm outside diameter
	Cable:	4.6 m length
	Connector:	6.9 cm length x 1.8 cm outside diameter
Mass (weight):		320 g
Material:		In accordance with the European REACH regulation and other environmental regulatory requirements, the handpiece contains Octamethylcyclotetrasiloxane CAS No. 556-67-2, Lead CAS No. 7439-92-1, Lead Titanium Zirconium Oxide CAS No. 12626-81-2, Decamethylcyclopentasiloxane CAS No. 541-02-6, and Dodecamethylcylclohexasiloxane CAS No. 540-97-6. This declaration is made in good faith and is either based on a technical evaluation, supplier data and/or laboratory testing.
		The handpiece contains the following substance(s) defined as CMR 1B in a concentration above 0.1% weight by weight: Cobalt; CAS No. 7440-48-4; EC No. 231-158-0. Current scientific evidence supports the position that medical devices manufactured from cobalt alloys or stainless steel alloys containing cobalt do not cause an increased risk of cancer or adverse reproductive effects.

Not Released Production In Work

Equipment Type:	Type CF Applied Part	
Frequency:	25.4 kHz	
Mode of Operation:	Non-continuous	
Duty Cycle:	See *Table 20 Tip and Sleeve Duty Cycle*. See *Section 16 Glossary.*	
Ingress (enclosure) Protection:	IPX0	
Environmental Conditions:	**Operation**	**Storage and Transportation**
Temperature Limitation:	10 °C – 27 °C	- 20 °C – 40 °C
Relative Humidity Limitation:	10 % – 85 %	10 % – 75 %
Atmospheric Pressure Limitation:	70 *kPa* – 106 *kPa*	50 *kPa* – 106 *kPa*
Regulatory Compliance:	**European Conformity**	CE 2797

14.5 Tips and Sleeves Specifications

Model:	Sonopet iQ Tips and Sleeves
REF (catalog numbers):	5500-25B-XXX, 5500-25S-XXX series excluding 5500-25S-601 (see 14.5.1)
Length (range):	10 cm to 20 cm
Mass (average weight):	18 g
Mode of Operation:	Non-continuous
Duty Cycle:	See *Table 20 Tip and Sleeve Duty Cycle*. See *Section 16 Glossary.*
Applied Part(s):	Defined by the manufacturer as the distal end of the tip and tip sleeve that comes into physical contact with the patient during normal use. See *Section 14.1 Console Specifications* for the Product Safety Certification standards.
Maximum Temperature of Applied Part(s):	Less than or equal to 48 C° as tested to the Product Safety Certification standards.
Environmental Conditions:	**Operation** / **Storage and Transportation**
Temperature Limitation:	10 °C – 27 °C / - 20 °C – 40 °C
Relative Humidity Limitation:	10 % – 85 % / 10 % – 75 %
Atmospheric Pressure Limitation:	70 *kPa* – 106 *kPa* / 50 *kPa* – 106 *kPa*
Regulatory Compliance:	**European Conformity** CE 2797

Not Released Production In Work

14.5.1 Laparoscopic Tip and Sleeve Specification

Model:	37 cm iQ Large Tip and Sleeve	
REF (catalog numbers):	5500-25S-601	
Length (range):	37 cm	
Mass (average weight):	Tip: 16.5 g Sleeve: 6 g	
Mode of Operation:	Non-continuous	
Duty Cycle:	See *Table 20 Tip and Sleeve Duty Cycle*. See *Section 16 Glossary.*	
Applied Part(s):	Defined by the manufacturer as the distal end of the tip and tip sleeve that comes into physical contact with the patient during normal use. See *Section 14.1 Console Specifications* for the Product Safety Certification standards.	
Maximum Temperature of Applied Part(s):	Less than or equal to 60 C˚ as tested to the Product Safety Certification standards.	
Environmental Conditions:	**Operation**	**Storage and Transportation**
Temperature Limitation:	10 °C – 27 °C	- 20 °C – 40 °C
Relative Humidity Limitation:	10 % – 85 %	10 % – 75 %
Atmospheric Pressure Limitation:	70 *kPa* – 106 *kPa*	50 *kPa* – 106 *kPa*

14.6 Irrigation Suction Cassette Specifications

Model:	Sonopet iQ Irrigation Suction Cassette (Tubing Set)	
REF (catalog number):	5500-573-000	
Dimensions:		
Cassette:	10.8 cm x 14 cm x 1.9 cm	
Irrigation Fluid Container Tubing with Spike:	127 cm length	
Suction Canister Tubing with Connectors:	114.3 cm length	
Handpiece Tubing with Connector:	500 cm length	
Mass (weight):	340 g	
Material:	In accordance with the European REACH regulation and other environmental regulatory requirements, the irrigation suction cassette contains Octamethylcyclotetrasiloxane CAS No. 556-67-2 and Tris(4-nonylphenyl, branched) Phosphite, Tris(nonylphenyl) Phosphite CAS No. 26523-78-4. This declaration is made in good faith and is either based on a technical evaluation, supplier data and/or laboratory testing.	
Environmental Conditions:	**Operation**	**Storage and Transportation**
Temperature Limitation:	10 °C – 27 °C	10 °C – 27 °C
Relative Humidity Limitation:	10 % – 85 %	10 % – 75 %
Atmospheric Pressure Limitation:	70 *kPa* – 106 *kPa*	50 *kPa* – 106 *kPa*
Regulatory Compliance:	**European Conformity**	CE 2797

Not Released Production In Work

14.7 Hand Controller Specifications

Model:	Sonopet iQ Hand Controller	
REF (catalog number):	5500-402-000	
Dimensions: **Housing:** [length x width x height]	16.8 cm x 5.1 cm x 1.5 cm	
Cable: [length]	4.6 m	
Connector: [length x outside diameter]	1 cm x 1.3 cm	
Mass (weight):	0.23 kg	
Power:	5 V ± 5% (external console)	
Ingress (enclosure) Protection:	IPX2	
Environmental Conditions:	**Operation**	**Storage and Transportation**
Temperature Limitation:	10 °C – 27 °C	-20 °C – 40 °C
Relative Humidity Limitation:	10 % – 85 %	10 % – 75 %
Atmospheric Pressure Limitation:	70 *kPa* – 106 *kPa*	50 *kPa* – 106 *kPa*
Regulatory Compliance:	**European Conformity** CE 2797	

Not Released
Production In Work

14.8 Foot Pedal(s) and Wireless Receiver Specifications

Model:		Sonopet iQ Basic Foot Pedal	Sonopet iQ Advanced Foot Pedal	Sonopet iQ Wireless Advanced Foot Pedal	Sonopet iQ Wireless Receiver (used with Wireless Advanced Foot Pedal)
Regulatory Compliance:	**European Conformity:**	CE	CE 2797	CE 2797	CE 2797
REF (catalog number):		5500-006-000	5500-007-000	5500-008-000	5500-008-300
Dimensions:	**Base/Body:** [length x width x height]	10.2 cm x 8.6 cm x 3.3 cm	19.3 cm x 15.5 cm x 5.1 cm	19.3 cm x 15.5 cm x 5.1 cm	6.7 cm x 4.4 cm x 3.2 cm
	Treadle: [length x width x height]	10.2 cm x 8.3 cm x 3.8 cm	19.7 cm x 15.2 cm x 4.4 cm	19.7 cm x 15.2 cm x 4.4 cm	Not Applicable
	Connector: [length x outside diameter]	4.6 cm x 1.3 cm	4.6 cm x 1.3 cm	4.6 cm x 1.3 cm	1 cm x 1.3 cm
	Operating Range: [length/distance]	4.6 m [cable]	4.6 m [cable]	4.6 m [wireless]	4.6 m [wireless]
Mass (weight):		0.7 kg	1.2 kg	0.9 kg	72.6 g
Power:		5 V ± 5% [external console]	5 V ± 5% [external console]	3 V ± 5% [internal, two AA alkaline batteries, not supplied, 100 hours run time, treadle depressed]	5 V ± 5% [external console]
Line of Sight Radius:		Not Applicable	Not Applicable	Not Applicable	4.6 m
Ingress (enclosure) Protection:		IPX8	IPX8	IPX8	IPX0
Toe Loop Detent Positions:		Not Applicable	(1) Storage (-1.5˚) (2) Operating (66.5˚) (3) Out-of-way (180˚) All positions measured relative to the floor.	(1) Storage (-1.5˚) (2) Operating (66.5˚) (3) Out-of-way (180˚) All positions measured relative to the floor.	Not Applicable
Indicator Lamps:	**Color:**	Not Applicable	White	White	Not Applicable
	Viewing Angle:		15˚ (degrees)	15˚ (degrees)	
	Intensity		35,000 millicandela (mcd)	35,000 millicandela (mcd)	

Environmental Conditions:	**Operation**	**Storage and Transportation**
Temperature Limitation:	27 °C / 10 °C	40 °C / - 20 °C
Relative Humidity Limitation:	85 % / 10 %	75 % / 10 %
Atmospheric Pressure Limitation:	106 *kPa* / 70 *kPa*	106 *kPa* / 50 *kPa*

Not Released Production In Work

RF Module: Sonopet iQ Wireless Advanced Foot Pedal ONLY

Frequency of Operation: 2.4 GHz

RF Bandwidth: 2400 MHz - 2483.5 MHz

Modulation: GFSK (FHSS)

RF Field Strength: 91.87 dBµV/m at 3 m

Federal Communications Commission (FCC) and Industry Canada (IC):

Contains: R24 (2.4 GHz Transceiver RF Module)
IC: 6992A-24
FCC ID: UYI24

This device complies with FCC Part 15 and IC license exempt RSS standard(s). Operation is subject to the following two conditions: (1) this device may not cause interference, and (2) this device must accept any interference, including interference that may cause undesired operation of the device.

Changes or modifications not expressly approved by Stryker Instruments could void your authority to operate the equipment.

15 Electromagnetic Compatibility

WARNING: AVOID stacking or locating equipment on or near the console. If such a configuration is necessary, verify normal operation of both the console and the equipment during use.

Guidance and manufacturer's declaration - electromagnetic emissions		
The Sonopet iQ Ultrasonic Aspirator System is intended for use in the electromagnetic environment specified below. The customer or the user of the Sonopet iQ Ultrasonic Aspirator System should assure that it is used in such an environment.		
Emissions test	**Compliance**	**Electromagnetic environment - guidance**
FCC	Part 18	The Sonopet iQ Ultrasonic Aspirator System complies with FCC regulations for conducted and radiated emissions under FCC Part 18.
RF emissions CISPR 11	Group 1	The Sonopet iQ Ultrasonic Aspirator System uses RF energy only for its internal function. Therefore, its RF emissions are very low and are not likely to cause any interference in nearby electronic equipment.
RF emissions CISPR 11	Class A	The Sonopet iQ Ultrasonic Aspirator System is suitable for use in all establishments other than domestic, and may be used in domestic establishments and those directly connected to the public low-voltage power supply network that supplies buildings used for domestic purposes, provided the following warning is heeded: **WARNING:** This equipment/system is intended for use in a professional healthcare facility environment. This equipment/system may cause radio interference or may disrupt the operation of nearby equipment. It may be necessary to take mitigation measures, such as reorienting or relocating the Sonopet iQ Ultrasonic Aspirator System or shielding the location.
Harmonic current emissions IEC 61000-3-2	Class A	
Voltage fluctuations/ flicker emissions IEC 61000-3-3	Complies	

Not Released Production In Work

Guidance and manufacturer's declaration - electromagnetic immunity			
The Sonopet iQ Ultrasonic Aspirator System is intended for use in the electromagnetic environment specified below. The customer or the user of the Sonopet iQ Ultrasonic Aspirator System should assure that it is used in such an environment.			
NOTE: The values provided in this table have changed due to 60601-1-2 4th Edition requirements.			
Immunity test	**IEC 60601 test level**	**Compliance level**	**Electromagnetic environment - guidance**
Electrostatic discharge (ESD) IEC 61000-4-2	±2, ±4, ±6, ±8 kV Contact ±2, ±4, ±8, ±15 kV Air	±2, ±4, ±6, ±8 kV Contact ±2, ±4, ±8, ±15 kV Air	Floors should be wood, concrete, or ceramic tile. If floors are covered with synthetic material, the relative humidity should be at least 10%.
Electrical fast transient/ burst IEC 61000-4-4	±2 kV at 100 kHz repetition frequency for power supply lines ±1 kV at 100 kHz repetition frequency for input/output lines	±2 kV at 100 kHz repetition frequency for power supply lines ±1 kV at 100 kHz repetition frequency for input/output lines	Mains power quality should be that of a typical commercial or hospital environment.
Surge IEC 61000-4-5	±0.5, ±1 kV line(s) to line(s) ±0.5, ±1, ±2 kV line(s) to earth	±1 kV line(s) to line(s) ±2 kV line(s) to earth	Mains power quality should be that of a typical commercial or hospital environment.
Voltage dips, short interruptions and voltage variations on power supply input lines IEC 61000-4-11	<5% U_T (>95% dip in U_T) for 0.5 cycle 0% U_T (100% dip in U_T) for 0.5 cycle at 0˚, 45˚, 90˚, 135˚, 180˚, 225˚, 270˚, and 315˚ 0% U_T (100% dip in U_T) for 1 cycle at 0˚ 40% U_T (60% dip in U_T) for 5 cycles 70% U_T (30% dip in U_T) for 25 & 30 cycles at 0˚ <5% U_T (>95% dip in U_T) for 5 s 0% U_T (100% dip in U_T) for 5 s	<5% U_T (>95% dip in U_T) for 0.5 cycle 0% U_T (100% dip in U_T) for 0.5 cycle at 0˚, 45˚, 90˚, 135˚, 180˚, 225˚, 270˚, and 315˚ 0% U_T (100% dip in U_T) for 1 cycle at 0˚ 40% U_T (60% dip in U_T) for 5 cycles 70% U_T (30% dip in U_T) for 25 & 30 cycles at 0˚ <5% U_T (>95% dip in U_T) for 5 s 0% U_T (100% dip in U_T) for 5 s	Mains power quality should be that of a typical commercial or hospital environment. If the user of the Sonopet iQ Ultrasonic Aspirator System requires continued operation during power mains interruptions, it is recommended that the Sonopet iQ Ultrasonic Aspirator System be powered from an uninterruptible power supply or a battery.
Power frequency (50/60 Hz) magnetic field IEC 61000-4-8	3 A/m, 30 A/m at 50 and 60 Hz	3 A/m, 30 A/m at 50 and 60 Hz	Power frequency magnetic fields should be at levels characteristics of a typical location in a typical commercial or hospital environment.

NOTE: U_T is the AC mains voltage prior to application of the test level.

Not Released Production In Work

Guidance and manufacturer's declaration - electromagnetic immunity			
The Sonopet iQ Ultrasonic Aspirator System is intended for use in the electromagnetic environment specified below. The customer or the user of the Sonopet iQ Ultrasonic Aspirator System should assure that it is used in such an environment.			
Immunity test	**IEC 60601 test level**	**Compliance level**	**Electromagnetic environment - guidance**
Conducted RF IEC 61000-4-6	3 Vrms 150 kHz to 80 MHz outside ISM bands 80% AM at 1 kHz 6 Vrms 150 kHz to 80 MHz in ISM bands 80% AM at 1 kHz	3 Vrms 150 kHz to 80 MHz outside ISM bands 80% AM at 1 kHz 6 Vrms 150 kHz to 80 MHz in ISM bands 80% AM at 1 kHz	IEC 60601-1-2 3rd Edition: Portable and mobile RF equipment should be used no closer to any part of the Sonopet iQ Ultrasonic Aspirator System, including cables, than the recommended separation distance calculated from the equation applicable to the frequency of the transmitter.
Radiated RF IEC 61000-4-3	3 V/m 80 MHz to 2.7 GHz 80% AM at 1 kHz 27 V/m 385 MHz, pulse modulation 18 Hz, Maximum power = 1.8W 28 V/m 450 MHz, FM ± 5 kHz deviation, 1 kHz sine, Maximum power = 2W 9 V/m 710, 745, 780, 5240, 5500, 5785 MHz, pulse modulation 217 Hz, Maximum power = 0.2W 28 V/m 810, 870, 930 MHz, pulse modulation 18 Hz, Maximum power = 2W 28 V/m 1720, 1845, 1970, 2450 MHz, pulse modulation 217 Hz, Maximum power = 2W	3 V/m 80 MHz to 2.7 GHz 80% AM at 1 kHz 27 V/m 385 MHz, pulse modulation 18 Hz, Maximum power = 1.8W 28 V/m 450 MHz, FM ± 5 kHz deviation, 1 kHz sine, Maximum power = 2W 9 V/m 710, 745, 780, 5240, 5500, 5785 MHz, pulse modulation 217 Hz, Maximum power = 0.2W 28 V/m 810, 870, 930 MHz, pulse modulation 18 Hz, Maximum power = 2W 28 V/m 1720, 1845, 1970, 2450 MHz, pulse modulation 217 Hz, Maximum power = 2W	Recommended separation distance $d = 1.17\sqrt{P}$ 150 kHz to 80 MHz $d = 1.17\sqrt{P}$ 80 MHz to 800 MHz $d = 2.33\sqrt{P}$ 800 MHz to 2.7 GHz Where P is the maximum output power rating of the transmitter in watts (W) according to the transmitter manufacturer and d is the recommended separation distance in metres (m). IEC 60601-1-2 4th Edition: **WARNING:** Portable RF equipment (including peripherals such as antenna cables and external antennas) should be used no closer than 30 cm (12 inches) to any part of the Sonopet iQ Ultrasonic Aspirator System including cables specified by the manufacturer. Otherwise, degradation of the performance of this equipment could result. Field strengths from fixed RF transmitters, as determined by an electromagnetic site survey[a] should be less than the compliance level in each frequency range[b]. Interference may occur in the vicinity of equipment marked with the following symbol: (Non-ionizing electromagnetic radiation)

NOTE 1: At 80 MHz and 800 MHz the higher frequency range applies.

NOTE 2: These guidelines may not apply in all situations. Electromagnetic propagation is affected by absorption and reflection from structures, objects and people.

[a] Field strengths from fixed transmitters, such as base stations for radio (cellular/cordless) telephones and land mobile radios, amateur radio, AM and FM radio broadcast and TV broadcast cannot be predicted theoretically with accuracy. To assess the electromagnetic environment due to fixed RF transmitters, an electromagnetic site survey should be considered. If the measured field strength in the location in which the Sonopet iQ Ultrasonic Aspirator System is used exceeds the applicable RF compliance level above, the Sonopet iQ Ultrasonic Aspirator System should be observed to verify normal operation. If abnormal performance is observed, additional measures may be necessary, such as re-orienting or relocating the Sonopet iQ Ultrasonic Aspirator System.

[b] Over the frequency range 150 kHz to 80 MHz, field strengths should be less than 3 V/m.

Not Released Production In Work

IEC 60601-1-2 3rd Edition: Recommended separation distances between portable and mobile RF equipment and the Sonopet iQ Ultrasonic Aspirator System			
The Sonopet iQ Ultrasonic Aspirator System is intended for use in an electromagnetic environment in which radiated RF disturbances are controlled. The customer or the user of the Sonopet iQ Ultrasonic Aspirator System can help prevent electromagnetic interference by maintaining a minimum distance between portable and mobile RF equipment (transmitters) and the Sonopet iQ Ultrasonic Aspirator System as recommended below, according to the maximum output power of the RF equipment.			
Rated maximum output power of transmitter W	**Separation distance according to frequency of transmitter m**		
	150 kHz to 80 MHz $d=1.17\sqrt{P}$	80 MHz to 800 MHz $d=1.17\sqrt{P}$	800 MHz to 2.7 GHz $d=2.33\sqrt{P}$
0.01	0.12	0.12	0.23
0.1	0.37	0.37	0.74
1	1.2	1.2	2.3
10	3.7	3.7	7.4
100	12	12	23

For transmitters rated at a maximum output power not listed above, the recommended separation distance *d* in meters (m) can be estimated using the equation applicable to the frequency of the transmitter, where *P* is the maximum output power rating of the transmitter in watts (W) according to the transmitter manufacturer.

NOTE 1: At 80 MHz and 800 MHz, the separation distance for the higher frequency range applies.

NOTE 2: These guidelines may not apply in all situations. Electromagnetic propagation is affected by absorption and reflection from structures, objects and people.

Not Released
Production In Work

16 Glossary

ACTUAL VALUE – the displayed output value that is derived from the amount the foot pedal treadle is depressed during VAR (variable) Mode ON.

APPLIED PART – a component of an electrical medical device that comes into physical contact with the patient during normal use to perform its function. The handpiece, tip, and sleeve are applied parts.

ASPIRATION – removal of fluid and emulsified tissue from the surgical site using suction.

DEFAULT PRESET – contains the factory-defined output values.

DUTY CYCLE – indicates a device is used in a non-continuous manner and requires the device to be ON (foot pedal pressed) for a specified time and OFF (foot pedal not pressed) for a specified time.

ERROR MESSAGE – indicates the need to respond to a software or hardware fault, or an unexpected console event. The error may be recoverable or nonrecoverable (requires service).

HANDPIECE ACTIVATION – indicates the handpiece is delivering ultrasonic power to the tip.

NONRECOVERABLE ERROR MESSAGE – a pop-up that may not be cleared and closed. Touch the SETTINGS button and access the CONTACT INFO (information) to request service.

OUTPUT – the delivery of ultrasonic power, irrigation, and/or suction to the tip.

PRESET – contains saved user-defined output values.

PRESET VALUE – the setting value entered at any one of the three control areas of the preset SETTINGS screen, including power, suction, irrigation, or Pulse Control (if activated).

PULSE CONTROL (OPTIONAL) – If activated and enabled, the console determines the parameters used to adjust the modulation of the tip vibration based on the selected setting for reducing the dose of ultrasonic energy delivered to the tip.

RECOVERABLE ERROR MESSAGE – a pop-up that may be cleared and closed by touching the OK button.

SYNC (SYNCHRONIZE) MODE: – indicates the output of suction is based on the state of the foot pedal treadle (pressed vs. not pressed).

SYNC MODE OFF – mode of operation where the suction tube is open (not occluded) and irrigation is applied at 5 mL/min for 30 seconds when the foot pedal treadle is not pressed.

SYNC MODE ON – mode of operation where the suction tube is closed (occluded) and the irrigation pump is off when the foot pedal treadle is completely released.

USER INPUT – describes the user entering values using the console touchscreen, foot pedal, or hand controller.

VAR (VARIABLE) MODE – indicates the output of both power and suction are dependent on the amount of force on the foot pedal treadle.

VAR MODE OFF – mode of operation where the amount of output is always the entered value when the foot pedal treadle is depressed any amount.

VAR MODE ON – mode of operation where the amount of output of power and suction is derived from the amount the foot pedal treadle is depressed.

WIRELESS CONNECTION – describes the connection and resulting communication between the wireless foot pedal and the wireless receiver.

WIRELESS PAIRING – describes the creation of a unique link between a specific wireless foot pedal and a specific wireless receiver.

17 Intellectual Property

17.1 Software License Notices

See the *Sonopet iQ Ultrasonic Aspirator Console Software License Addendum REF 5500-050-706* supplied with the console.

17.2 Trademarks

Trademarks not the property of Stryker Corporation are the property of their respective owners.

Not Released Production In Work

Stryker or its affiliated entities own, use or have applied for the following trademarks or service marks: Blu62, Sonopet iQ, and the Stryker logo. All other trademarks are trademarks of their respective owners or holders.

Manufactured for:
Stryker Instruments
1941 Stryker Way
Portage, Michigan 49002 USA
(269) 323-7700 (800) 253-3210

EC REP

Stryker European Operations Limited
Anngrove, IDA Business & Technology Park
Carrigtwohill, Co Cork
T45 HX08 Ireland

Stryker EMEA Supply Chain Services B. V.
Frans Maasweg 2
Venlo 5928 SB, The Netherlands

UK Responsible Person
Stryker UK Ltd.
Stryker House
Hambridge Road
Newbury
Berkshire
RG14 5AW

Copyright © 2024 Stryker

Not Released
Production In Work