Crossmatch™

Verifier® Sentry

Operator Manual

Part Number 870391 V1.0
© Copyright, 2014 Cross Match Technologies, Inc. All rights reserved. Specifications are subject to change without prior notice. Verifier is a registered trademark, and Crossmatch is a trademark, of Cross Match Technologies, Inc. All other trademarks are the property of their respective owners. No portion of this guide may be reproduced in any form without the express written permission of Cross Match Technologies, Inc.

Contents

Introduction

How this book is arranged 1
Standards 1
Glossary 2
Specifications for the Sentry 2
Accessories for the Sentry 3
FCC Statement 3
Industry Canada 3
Certification identifiers for wireless modules 4
Recycling information 4
Battery disposal 4
WEEE Directive 4

Description

The front of the Sentry 6
The left side of the Sentry 7
The right side of the Sentry 8
The back of the Sentry 9
The top of the Sentry 10
The bottom of the Sentry 10

Use the Sentry

Start the Sentry 11
Stop the Sentry 12
Scan a Contact Card 13
Scan a Contactless Card 14
Read an ePassport 16
Capture and verify the biometrics 17
Capture a photograph 18
Read a barcode 18

Maintenance

Remove the battery 21
Install the battery 22
Insert a SAM card 22
Remove a SAM card 22
Insert the SIM card 23
Remove the SIM card 23
Insert the Micro SD card 23
Remove the Micro SD card 24
Find the Product Label 24
Replace the fingerprint sensor 24

Customer Care

Technical Support 25

E-mail 25
Telephone and facsimile 25
Return and repair of the Sentry 26
Delivery costs 26
Contact information 26

Warranty

LIMITED WARRANTY 27

Index

Figures

Figure 1: The front of the Sentry 6
Figure 2: The left side of the Sentry 7
Figure 3: The right side of the Sentry 8
Figure 4: The back of the Verifier® Sentry 9
Figure 5: The top of the Verifier® Sentry 10
Figure 6: The bottom of the Verifier® Sentry 10
Figure 7: The Sentry battery compartment (battery removed) 21

Tables

Table 1: Glossary 2
Table 2: Specifications 2
Table 3: Biometric / Credential Capture 2
Table 4: Applications 3
Table 5: Accessories 3
Table 6: The front of the Sentry 6
Table 7: The left side of the Sentry 7
Table 8: The right side of the Sentry 8
Table 9: The back of the Sentry 9
Table 10: The top of the Verifier® Sentry 10
Table 11: The bottom of the Verifier® Sentry 10
Table 12: Items on the Sentry desktop 11
Table 13: Items in the Sentry battery compartment 21

Tables

Introduction

How this book is arranged

- **"Introduction"** describes this book and its contents.
- **"Description"** describes the Verifier® Sentry and its features. You learn how to start the device.
- **"Use the Sentry"** describes how to use the Verifier® Sentry to capture the biometric information.
- **"Maintenance"** how to perform normal maintenance on the Verifier® Sentry.
- **"Customer Care"** contains the information about technical assistance for the Verifier® Sentry and lists the contact numbers for Crossmatch.
- **"Warranty"** contains the Crossmatch warranty for the Verifier® Sentry.

Standards

The following standards are used in this book:

- **Bold UPPERCASE** text**, bold lowercase** text or *tilted* text identify important information. Special information can appear in a Note, Caution or Warning.

Note

A **Note** contains additional information. To ignore a note can cause a delay, There is no mechanical damage or personal injury.

Caution

A **Caution** contains a method to prevent the loss of data or damage to equipment.

Warning

A **Warning** indicates that the loss of data or personal injury can occur.

Glossary

Table 1 Glossary

Term	Definition
3G	The third generation of cellular mobile phone and data communication standards, featuring higher bandwidth for web-based applications and video. **Note** In the Sentry, the 3G cellular modem transmits **data**. The Sentry does **not** transmit voice.
Auto Capture	A Crossmatch technology that captures an acceptable fingerprint without action from the user.
Bluetooth	A short-range radio technology that makes easy the following types of communications: • The communications between internal devices • The communications between devices and the Internet • The synchronization of data between internal devices and other computers
Flat fingerprint	A name for a fingerprint captured with the fingertip pressed on the platen. The Sentry captures flat fingerprints.
GPS	The Global Positioning System of satellites that can accurately find a GPS transceiver.
Platen	The surface where you put the fingers to capture the fingerprints.
USB	The Universal Serial Bus (USB) is a standard method to connect electronic devices.
User	The user captures the biometric and personal information. Another name is the **operator**.
Wi-Fi	Wireless local area network technology using the 802.11 standard. The Verifier Sentry can not be the access point for a Wi-Fi hotspot. One network connection (Wi-Fi or Cellular) is allowed. When the primary connection is active, the secondary connection is not active

Specifications for the Sentry

Table 2 Specifications

Category	Description
Main Processor	ARM® Cortex-A9™ based iMX6 by Freescale™
Operating System	Android® 4.2.2
Memory	8GB Storage + 1GB DDR RAM; Internal eMMC slot to expand memory
Weight	4lbs (630g)
Dimensions	7 in (208 mm) by 3.7 in (94 mm) by 1.25in (32 mm)
Operating Temperature	14°F to 122 °F (-10 °C to 50 °C)
Humidity Range	10% to 90% non-condensing; Splash-resistant, IP65
Power	Removable battery, 8-hour operation
Ruggedized standards	MIL-STD-810G
External interfaces	USB-OTG (On The Go), Docking Station and Accessory.
Wireless Communications	Bluetooth® 4.0, Wireless LAN 802.11b/g/n; Cellular Connectivity 3G
Display	4.3 in, 800x480 WVGA display with projective capacitive touch panel

Table 3 Biometric / Credential Capture

Category	Description
Fingerprint	500 ppi, FAP 30 PIV-certified single finger sensor
Camera	5MP Auto Focus, Auto Flash

Table 3 Biometric / Credential Capture

Category	Description
Smart Card (contact or contactless)	ISO / IEC 7801 (CAC, PIV, TWIC,14443-A, 14443-B, 15693, NFCIP-1, NFCIP-2, MIFARE, FeliaCa)
Bar Code Reading	1D / 2D (PDF 417, Code 39)
ePassport	ICAO 9303 - MRZ, NFC

Table 4 Applications

Category	Description
SDK's	Verifier Sentry Essentials

Accessories for the Sentry

Table 5 Accessories

Accessory	Description
Docking Station	The Docking Station can charge two batteries, one in the Sentry and one in the battery charger compartment. The docking station has one Ethernet connector and four USB connectors.

FCC Statement

FCC ID#: Q9YSENTRY1

This device has been tested and found to comply with the limits for a Class A digital device, pursuant to Part 15 of the FCC Rules. These limits are designed to provide reasonable protection against harmful interference when the equipment is operated in a commercial environment. This equipment generates, uses, and can radiate radio frequency energy and, if not installed and used in accordance with the instruction manual, may cause harmful interference to radio communications. Operation of this equipment in a residential area is likely to cause harmful interference in which case the user will be required to correct the interference at this own expense.

Operation is subject to the following two conditions: (1) This device may not cause harmful interference, and (2) This device must accept any interference received, including interference that may cause undesired operation.

FCC RF exposure requirements:

Warning: Changes or modifications not expressly approved by the manufacturer, could void the user's authority to operate the equipment.

Industry Canada

IC: 7944B_SENTRY1

This device complies with Industry Canada license-exempt RSS standard(s). Operation is subject to the following two conditions: (1) this device may not cause interference, and (2) this device must accept any interference, including interference that may cause undesired operation of the device.

"Le présent appareil est conforme aux CNR d'Industrie Canada applicables aux appareils radio exempt du licence. L'exploitation est autorisée aux deux conditions suivantes: (1) l'appareil ne doit pas produire de brouillage, et (2) l'utilisateur de l'appareil doit accepter tout brouillage radioélectrique subi, même si le brouillage est susceptible d'en compromettre le fonctionnement."

Certification identifiers for wireless modules

Wi-Fi/Bluetooth : TiWi-BLE

FCC ID: Q9YSENTRY2

IC ID: 7944B-SENTRY2

Cellular: PHS8-P

(USA) FCC ID#: Q9YSENTRY3

(Canada) IC ID#: 7944B-SENTRY3

Recycling information

Crossmatch recommends that customers dispose of their used computer hardware, monitors, printers and other peripherals in an environmentally sound manner. Potential methods include reuse of parts or whole products and recycling products, components and/or materials.

Battery disposal

Batteries should be recycled in accordance with the laws governed by your Country, State or County.

In the US, please refer to the EPA guidelines for guidelines for the disposal of hazardous waste material at http://www.epa.gov/epawaste/hazard/index.htm.

Take batteries to your local Hazardous Waste Collection Facility for disposal. To find the nearest recycling facility in the US, go to http//earth911.com and enter your postal ZIP code.

• DO NOT EXPOSE TO FIRE OR HIGH TEMPERATURES (140 °F/60 °C)

• DO NOT DISASSEMBLE• DO NOT SHORT THE TERMINALS

WEEE Directive

The following is the test of the Waste Electrical and Electronic Equipment (WEEE) Directive.

In the European Union, this label indicates that this product should not be disposed of with household waste. It should be deposited at an appropriate facility to enable recovery and recycling.

The **Crossmatch WEEE Registration number** is 60744969.

Description

THIS CHAPTER DESCRIBES THE VERIFIER® SENTRY AND THE FEATURES THAT YOU CAN USE TO CAPTURE THE BIOMETRIC INFORMATION.

The Verifier® Sentry is a portable identification and verification device that provides many methods to capture personal and biometric information. Strong design, small size and light weight makes the device easy to use in the field. The device can scan CAC/PIV, Contact and Contactless smart cards. The Verifier® Sentry can read the Machine Readable Zone (MRZ) on an ePassport and read the chip embedded in the passport.

The front of the Sentry

Figure 1 The front of the Sentry

The front of the Sentry contains the features that allow the operator to monitor the state of the device. The following table describes the features.

Table 6 The front of the Sentry

	Description
1	The finger is pressed on the **platen surface** to capture the fingerprint.
2	The **speaker**.
3	The Capacitive **Touch Screen** is sensitive to contact by a finger or a capacitive stylus.
4	When the battery accepts a charge, the **Charge indicator** illuminates. • **A Red light** indicates 500 mA of electricity is supplied to the Sentry. This current the amount required to operate the Sentry, but less than the amount required to charge the Sentry. • **An Amber light** indicates 1500 mA of electricity is supplied to the Sentry. • **A Green light** indicates the Sentry is supplied the correct amount of electricity by the Docking Station. This arrangement allows the device to operate and accept the fastest rate of charge.
5	The **microphone**.
6	The **Status indicator**. The Android hardware API controls this LED.

The left side of the Sentry

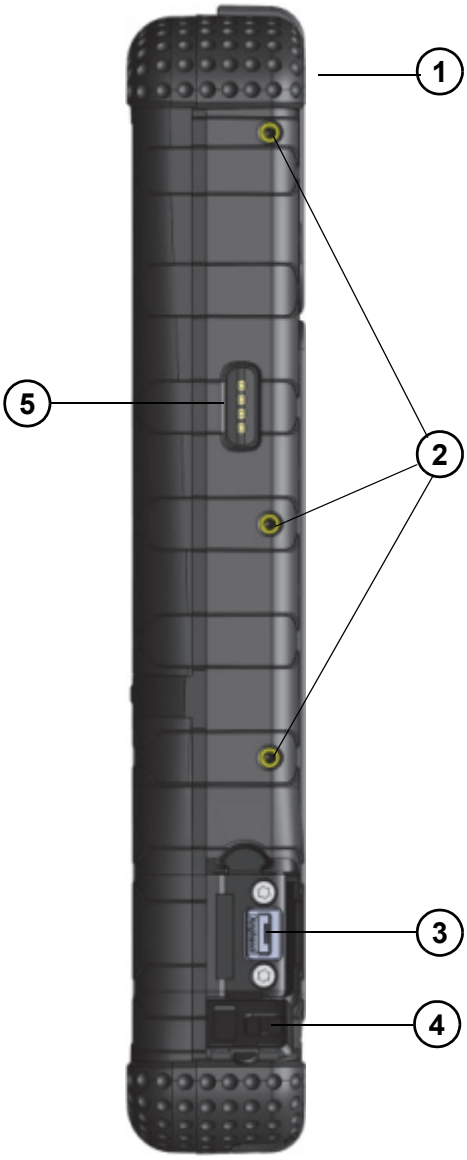

Figure 2 The left side of the Sentry

The following table describes the left side of the Sentry.

Table 7 The left side of the Sentry

	Description
1	The top-end of the Verifier® Sentry.
2	The mounting points for accessories.
3	During normal operation, this port allows the Sentry to be a memory or camera device to a host computer. When the **On The Go (OTG) adapter** is used, the **USB connector** allows the Sentry to be a host computer for an external USB device. The connector can be a charge point. When connected to a laptop, the connector is a device endpoint.
4	The attached cover for the USB connector is shown open.
5	This is the data connection for an accessory.

The right side of the Sentry

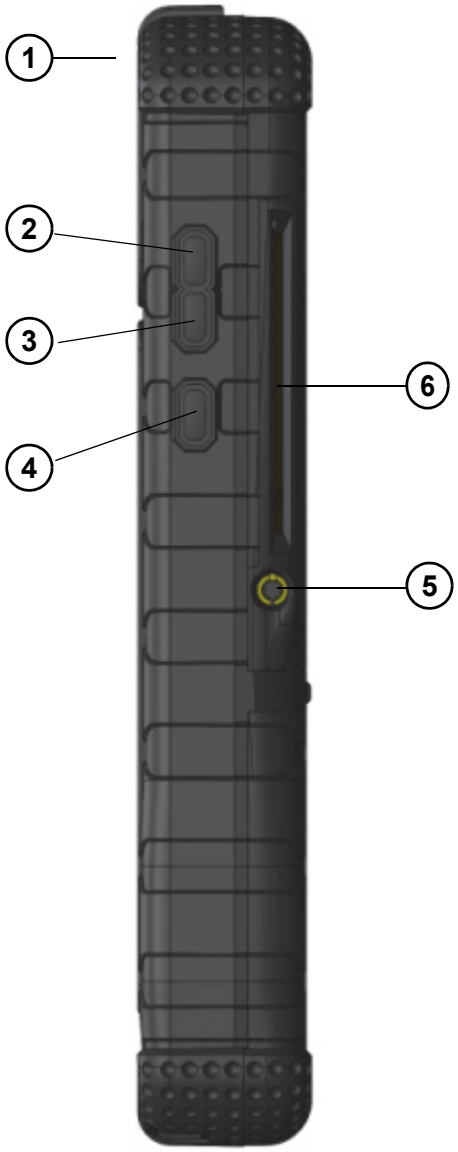

Figure 3 The right side of the Sentry

The following table describes the features on the right side of the Sentry.

Table 8 The right side of the Sentry

	Description
1	The top-end of the Verifier® Sentry.
2	The button to increase the output from the speaker or from the earphones.
3	The button to decrease the output from the speaker or from the earphones.
4	The Start button.
5	The connection point for earphones and a microphone. The jack is one eighth of an inch in diameter.
6	The slot for a contact card. An application is required to display the data on the screen. When the operator inserts the card, the gold contacts on the top surface of card must be visible. See **"Scan a Contact Card" on page 13**.

The back of the Sentry

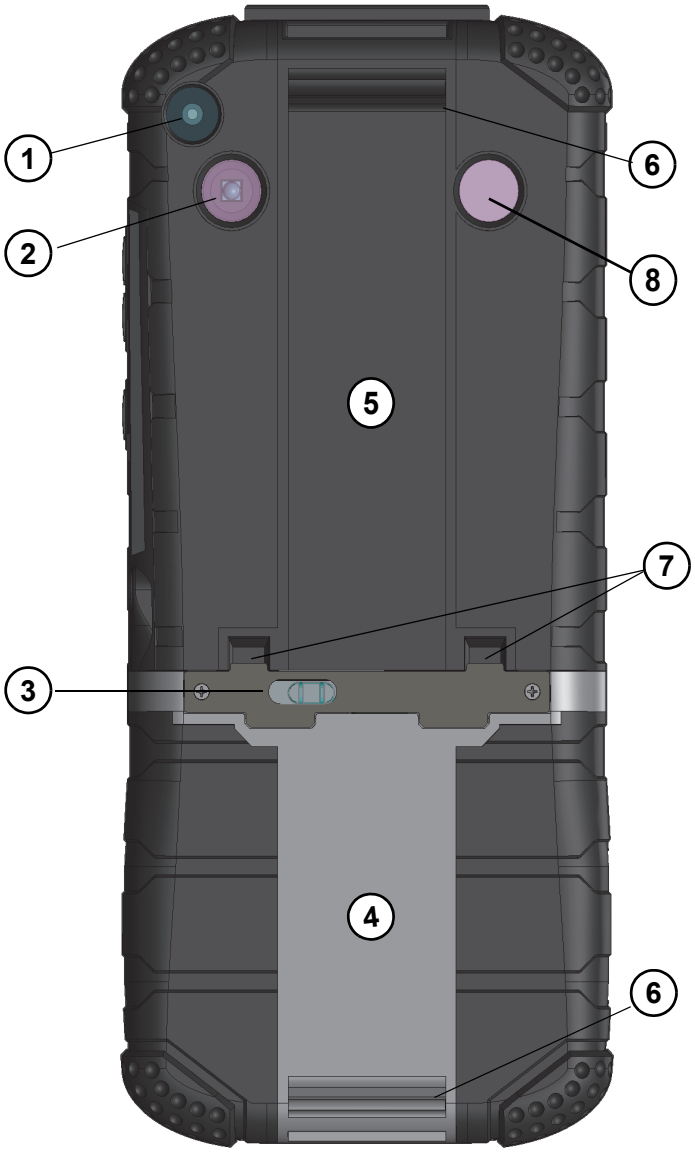

Figure 4 The back of the Verifier® Sentry

The following table describes the features on the back of the Sentry.

Table 9 The back of the Sentry

	Description
1	The camera and camera lens.
2	The light source for the bar code scanner.
3	The release latch for the battery cover.
4	The cover for the battery compartment.
5	Contactless card Reader area. **The card can be outside the hand strap**. See **"Scan a Contactless Card" on page 14**.
6	The attachment bars for the hand strap.
7	Alignment slots for the docking station.
8	The **photo light source** provides illumination for photos captured with the camera. The **light** is disabled until the camera is enabled.

The top of the Sentry

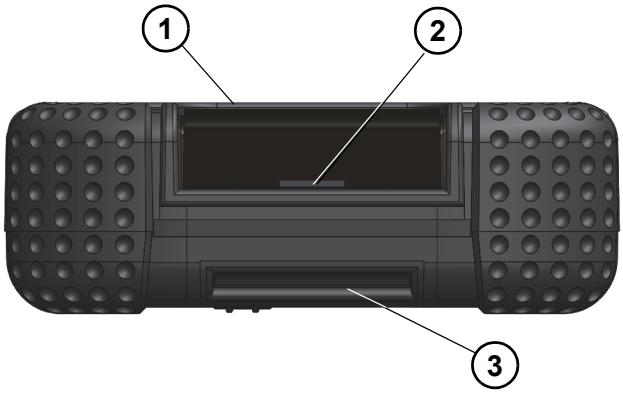

Figure 5 The top of the Verifier® Sentry

The following table explains the features on the top of the Verifier® Sentry.

Table 10 The top of the Verifier® Sentry

	Description
1	The bezel around the platen.
2	The slot allows a tool provided by Crossmatch to release the sensor from the Verifier® Sentry. See **"Replace the fingerprint sensor" on page 24**.
3	The top attachment bar for the hand strap. The hand strap is not shown.

The bottom of the Sentry

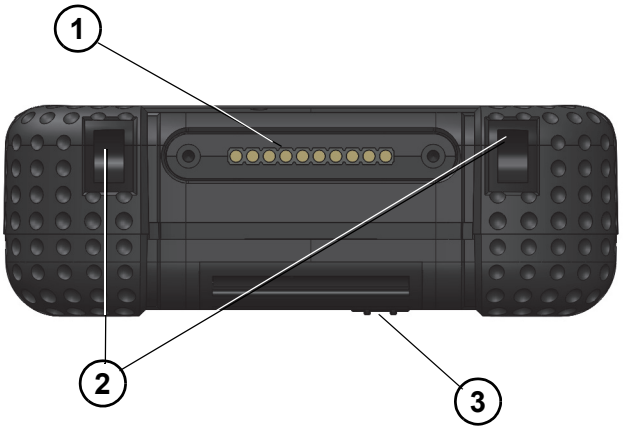

Figure 6 The bottom of the Verifier® Sentry

The following table describes the features of the bottom of the device.

Table 11 The bottom of the Verifier® Sentry

	Description
1	The connection point for the optional docking station.
2	Two slots that fit over two tabs on the optional docking station to correctly align the Verifier® Sentry.
3	The bottom attachment bar for the hand strap.

Use the Sentry

THIS CHAPTER DESCRIBES HOW TO START AND STOP THE SENTRY. THE CHAPTER ALSO DESCRIBES THE TASKS THE OPERATOR CAN PERFORM WITH THE SENTRY.

Start the Sentry

Follow the procedure to turn on the Sentry.

1 Press and hold the **Start** button. The **Status indicator** illuminates.
2 Release the **Start** button. The start sequence begins. The Sentry desktop appears. The Sentry is started.

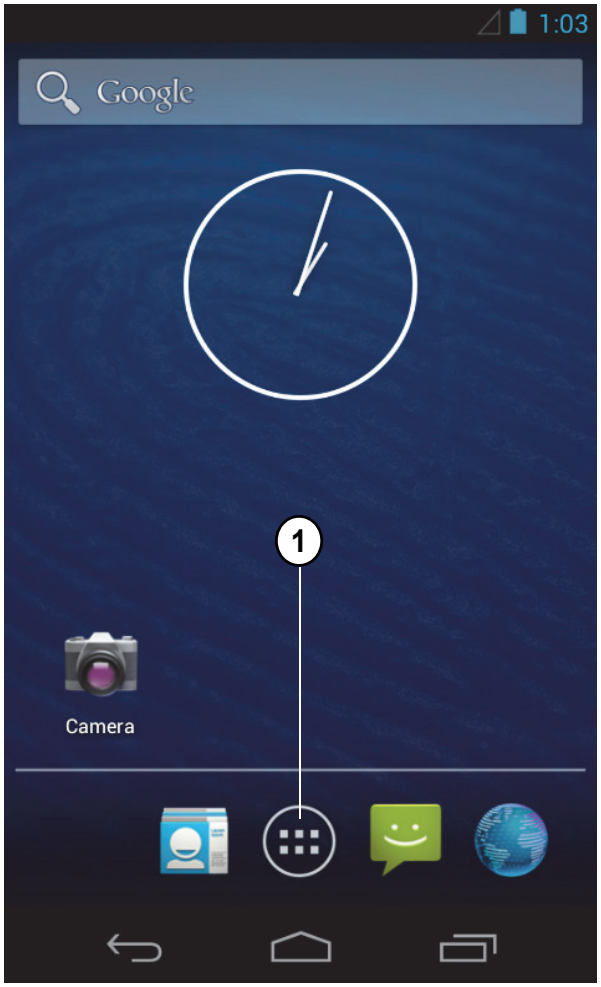

The illustration shows the Sentry desktop. The desktop is a normal Android desktop. A tutorial is available on the Internet for the Android JB operating system.

Table 12 Items on the Sentry desktop

	Description
1	The **Apps** icon. Touch this icon to see one or more screens that contain the icons for applications installed on the Sentry.

Stop the Sentry

Use the following steps to stop the Sentry.

1 Press and hold the **Start** button until the **Mode** menu appears.
2 Select **Power off**. The **Power off** menu appears.

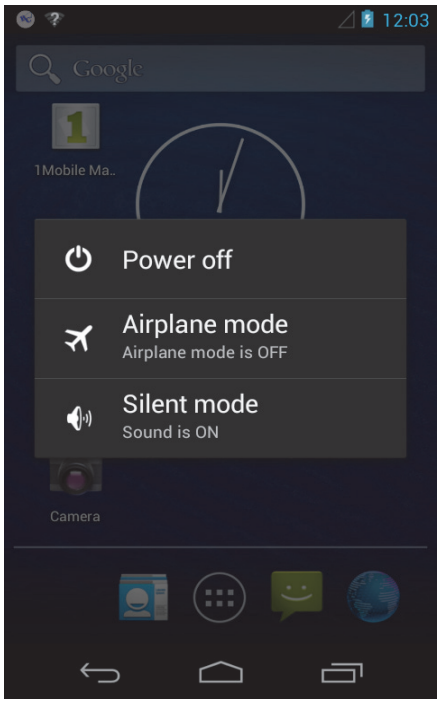

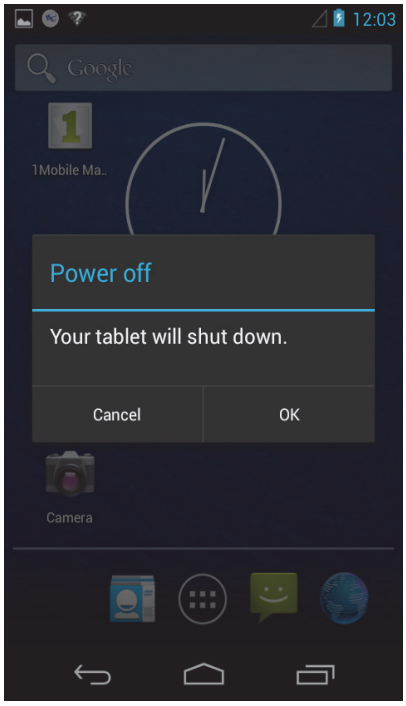

3 Select **OK** to turn off the Sentry or select **Cancel** to return to the desktop.

The following sections describe the procedures that the operator can do with the Sentry. The illustrations in the following procedures show a Crossmatch demonstration application. The actions for the procedures are the normal for similar applications.

1 Start the application.
2 Sign into the application
3 The *Home* window appears with the **Main** menu for the application displayed. The main menu for other applications can contain different selections.

Scan a Contact Card

The following procedure shows how to scan data from a Contact card and verify the data with the Sentry. The application in the illustration is a Crossmatch demonstration application. Your application can appear different.

1 Start the application.
2 Sign into the application The *Home* window appears with the **Main** menu for the application displayed. The application in the illustration is a Crossmatch demonstration application. Your application can be different.
3 Touch to select **Contact Card**. The instruction to insert the card and enter a PIN appears.
4 Enter the PIN
5 Insert the card, with the picture visible, into the slot in the right-side of the Sentry. See **"The right side of the Sentry" on page 8**.
6 Enter the PIN.
7 Touch the **Submit** button.

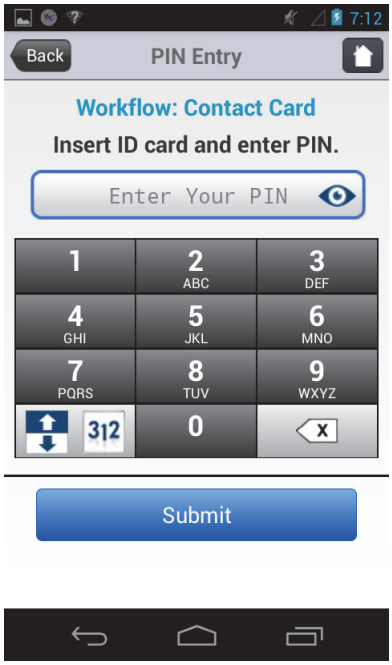

8 The Sentry scans the card and the application displays the data from the card on the screen. The workflow in the example application requires the operator to verify the fingerprint.

9 Touch the **Verify Fingerprint** button. The *Fingerprint Capture* window appears

10 Tell the person to press the correct finger on the platen of the Sentry. The fingerprint appears in the window. The Sentry captures the fingerprint. The application compares the fingerprint to the fingerprint stored on the card.
If the fingerprint matches, a green line appears above and below the fingerprint and a message appears in the window.
If the fingerprint **does not match**, a red line above and below the fingerprint and a message appears in the window.

11 Take the action required by the procedures for the organization.

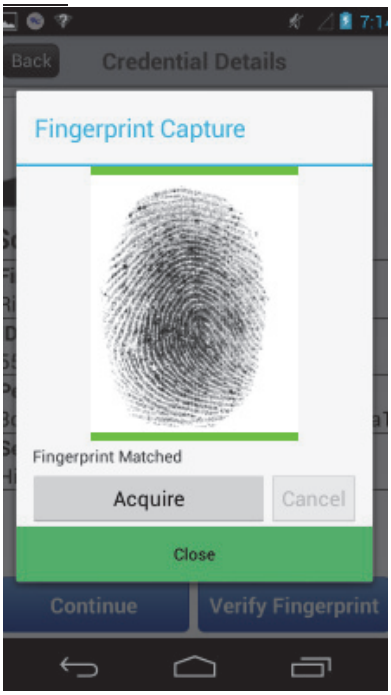

Scan a Contactless Card

The following procedure shows how to scan the data from a Contactless card and verify the data with the Sentry. The application in the illustration is a Crossmatch demonstration application. Your application can appear different.

1 Touch to select **Contactless Card**. The instruction to scan the card appears.

2 Put the card near the Contactless Card Reader area on the back of the Sentry. See **"The back of the Sentry" on page 9**.

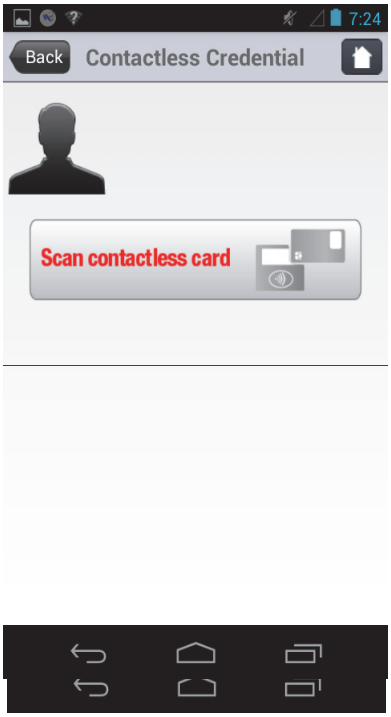

3 The Sentry scans the card and the application displays the data from the card on the screen. If the scanner does not read the card, a message appears. The workflow requires the operator to verify the fingerprint.

4 Touch the **Verify Fingerprint** button. The *Fingerprint Capture* window appears

5 Tell the person to press the correct finger on the platen of the Sentry. The fingerprint appears in the window. The Sentry captures the fingerprint and the application compares the fingerprint to the fingerprint stored on the card.

If the fingerprint matches, a green line appears above and below the fingerprint and a message appears in the window.
If the fingerprint **does not match**, a red line above and below the fingerprint and a message appears in the window.

6 Take the action required by the procedures for the organization.

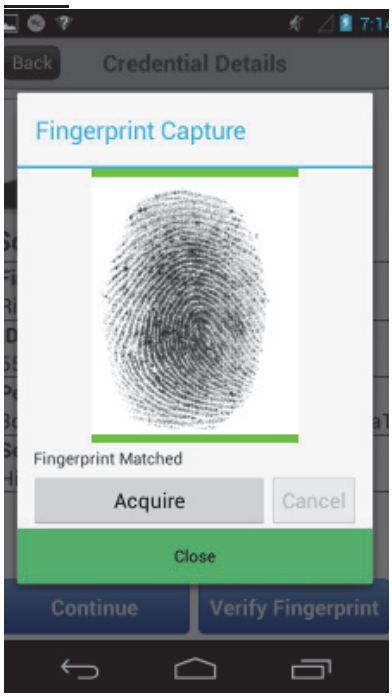

Read an ePassport

The following procedure shows how to scan the data from an ePassport with the Sentry.

Note

Some ePassports can contain levels of data encryption that the application cannot read.

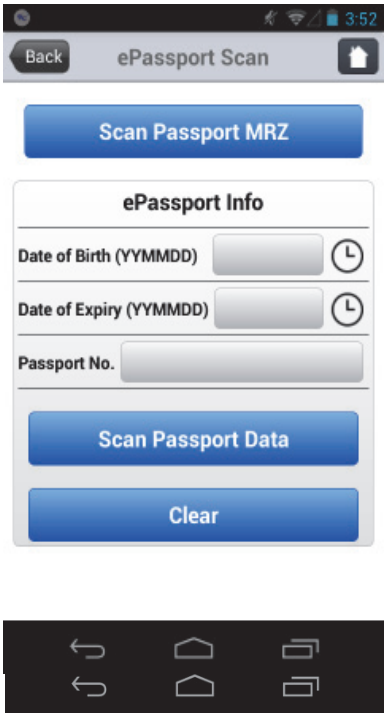

1 Touch ePassport from the main menu. The *ePassport Scan* window appears. The application in the illustration is a Crossmatch demonstration application. Your application can appear different.
2 Touch **Scan Passport MRZ**. The Sentry camera turns on and displays a white box.
3 Adjust the image of the MRZ area to appear inside the white box. The Sentry scans the MRZ and displays the information in a screen

.

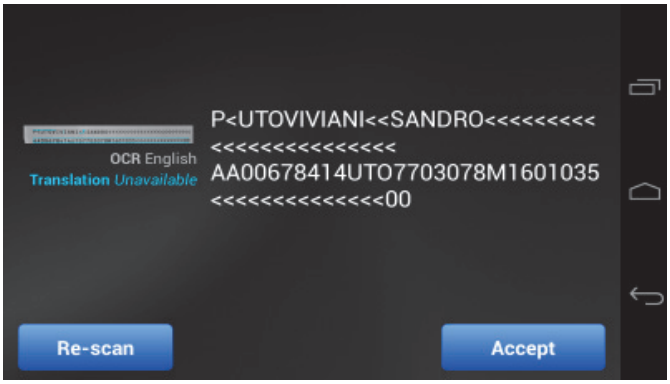

4 Touch **Accept** to keep the information, or touch **Re-scan** to scan the MRZ area again.
5 The Date of Birth, the Expiration Date and the Passport Number appear in the ePassport Scan screen.

Note

The operator can enter the required information in the ePassport information boxes. When the operator touches an information box, the keyboard appears for data entry.

6 Put the page of the passport that contains the chip near the Contactless Card Reader on the back of the Sentry. See **"The back of the Sentry" on page 9**. The Sentry reads the chip and the application displays the data from the chip on the screen.

Note

When the application does not read the encrypted data on the chip, a message appears on the screen.

7 To complete the ePassport process, the operator takes the actions described in the procedures for the organization.

Capture and verify the biometrics

An application is required to capture and save the biometrics for comparison to database records. The following steps describe how to capture a fingerprint with a Crossmatch demonstration program. Your application can appear different. The required steps are the same.

1 Start the application to capture the biometrics.
2 Sign into the application. The Home window appears.
3 Select **Search** to begin the fingerprint capture process.

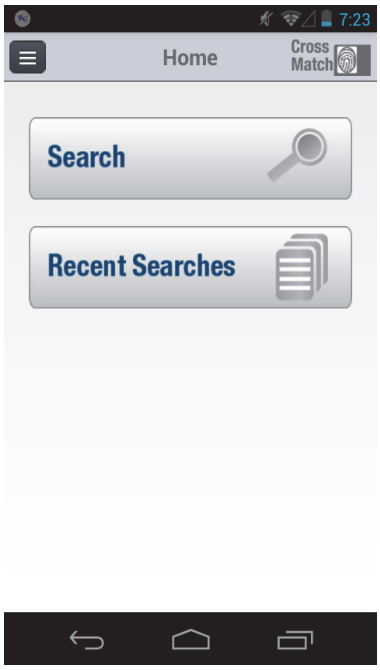

4 Follow the instructions on the screen to capture the fingerprints.

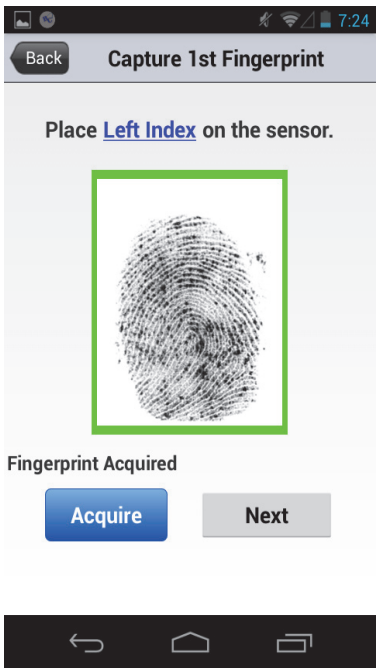

5 Follow the procedure to capture a face photo of the person.
6 The demonstration application puts a box on the screen.
7 Put the face of the person into the box. The application captures the photo.
8 Touch the **Use** button**.** The application compares the biometrics to a database and reports the results of the comparison.
9 To complete the process, the operator takes the actions described in the procedures for the organization.

Capture a photograph

An application is required to capture a photograph and save the photograph in a record.

1 Start the Sentry.
2 Start the application to save the photograph.
3 Sign into the application.
4 Select the camera from the desktop.
5 Take the photograph.
6 Follow the instructions to save the photograph in the record.

Read a barcode

An application is required to read a barcode and save the data in a record. The application shown here is a Crossmatch demonstration application.

1 Start the Sentry.
2 Start the application to scan the barcode. The camera starts and displays red cross hairs over the image.
3 If more light is required, touch the button that turns on the light.

4 Adjust the Sentry to center the cross hairs in the barcode.

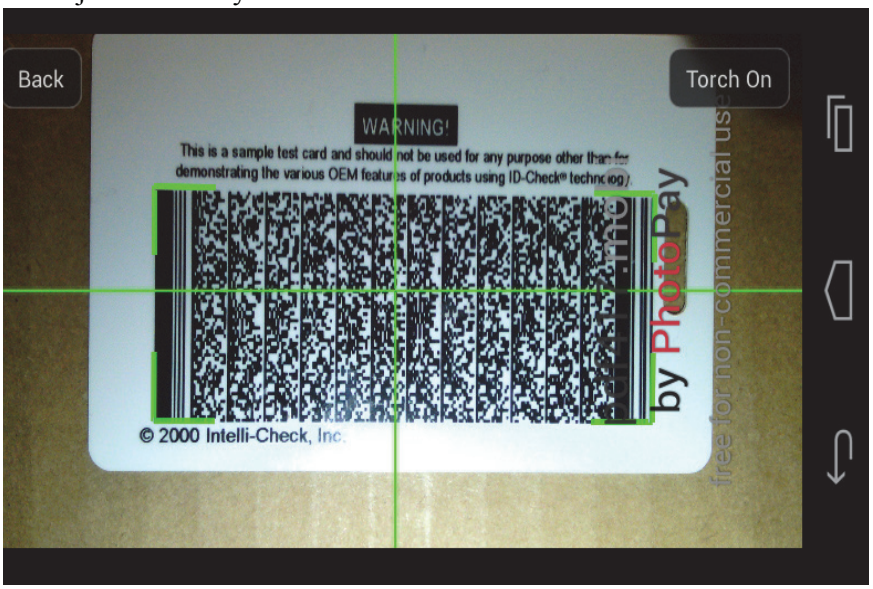

The cross hairs turn green and green brackets appear to frame the barcode image. The application captures the data in the barcode. The barcode information appears on the Sentry screen.

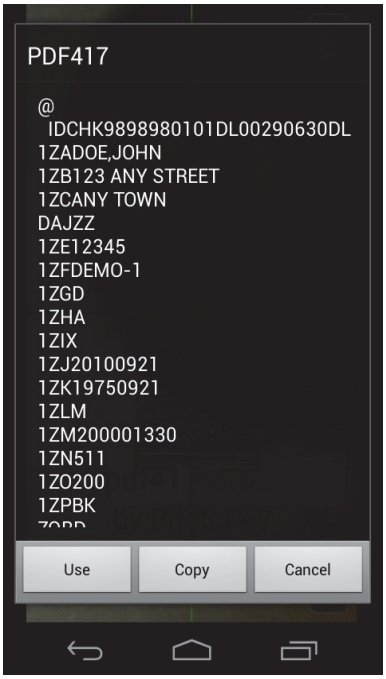

5 Follow the work flow instructions to save the barcode information.

THIS DOCUMENT DESCRIBES THE MAINTENANCE THAT THE OPERATOR CAN PERFORM ON THE SENTRY.

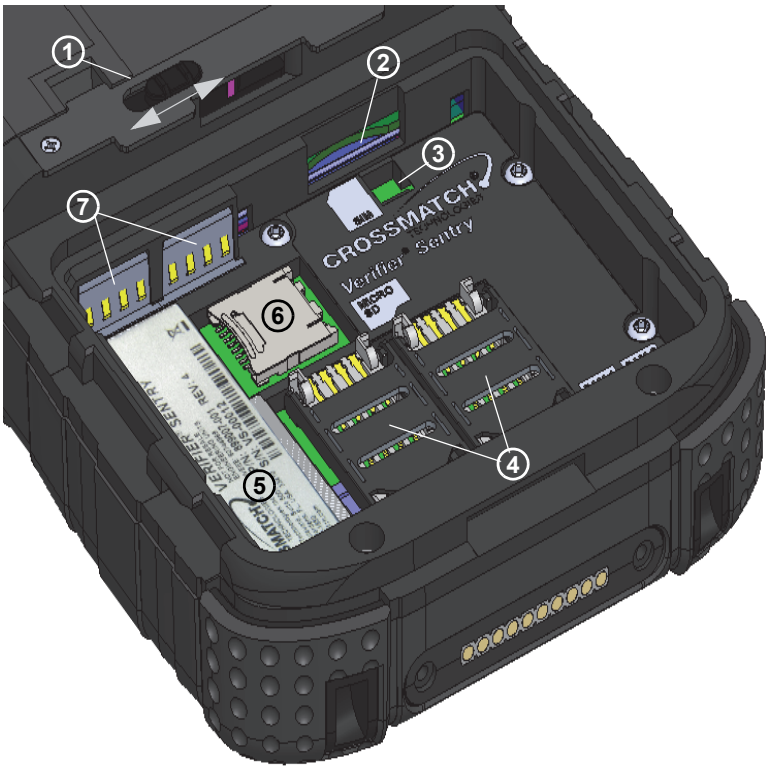

Figure 7 The Sentry battery compartment (battery removed)

Table 13 Items in the Sentry battery compartment

1	The **cover latch for the battery compartment**. The latch slides to release the cover. The latch automatically returns to the closed position.
2	The socket for the **SIM** card accepts a normal size SIM card (recommended). An adapter tray is required for smaller SIM cards.
3	The **latch that indicates that the battery is installed**. The battery compresses the latch and the installation is recorded in the log. When the battery is removed, the latch is released and the removal of the battery is recorded.
4	The socket for a **SAM** card. There are two sockets.
5	The product label for the Sentry.
6	The **Micro SD** card socket.
7	The battery connection points for the Sentry.

Remove the battery

Use the following procedure to remove the battery.

1 Press and hold the Start switch to turn off the Sentry.
2 Hold the Sentry with the back of the device visible.
3 Loosen the hand strap.
4 Slide and hold the latch for the cover in the open position.
5 Apply enough pressure to **slide the cover away from the latch until it stops**.
6 Release the latch and lift the cover from the Sentry.
7 Lift the bottom of the battery and remove the battery from the battery compartment.

Install the battery

1 Remove the old battery, if necessary. See **“Remove the battery” on page 21**.
2 Hold the battery with the label visible.
3 Put the connection points on the battery against the connection points (**7**) in the battery compartment.
4 Press to install the battery.
5 Put the cover in position over the battery compartment.

Note

If the cover does not fit correctly over the battery compartment, check the position of the seal assembly inside the cover. The assembly must extend under the hook for the cover latch. If necessary, slide the assembly toward the hook. When in the correct position, the assembly stops.

6 Apply enough pressure to slide the cover toward the latch. When the cover closes, you hear the cover latch reset.
7 Tighten the hand strap.

Insert a SAM card

Use the following procedure to insert a SAM card. There are two SAM card connectors in the battery compartment, next to the Sentry label.

1 Remove the battery. See **“Remove the battery” on page 21**.
2 Select an empty SAM connector.
3 Use a fingernail to unlock and move the SAM cover toward the center of the Sentry.
4 Open the SAM cover until the cover stops.
5 Insert the SAM card into the cover. The card inserts with the chamfer on the card as shown in the illustration.
6 Close and lock the SAM cover.
7 Insert the battery. See **“Install the battery” on page 22**.

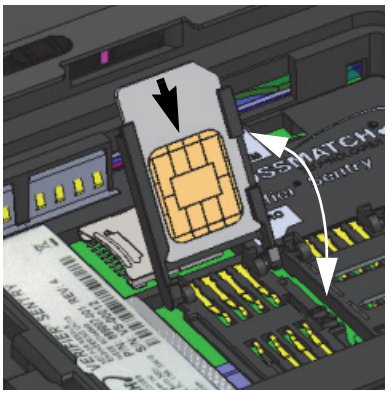

Remove a SAM card

Use the following procedure to remove a SAM card. There are two SAM card connectors in the battery compartment, next to the Sentry label.

1 Remove the battery. See **“Remove the battery” on page 21**.
2 Select SAM card to remove.
3 Use a fingernail to unlock and slide the SAM cover toward the center of the Sentry.
4 Open the SAM cover until the cover stops.
5 Slide the SAM card out of the cover.
6 Close and lock the SAM cover.
7 Insert the battery. See **“Install the battery” on page 22**.

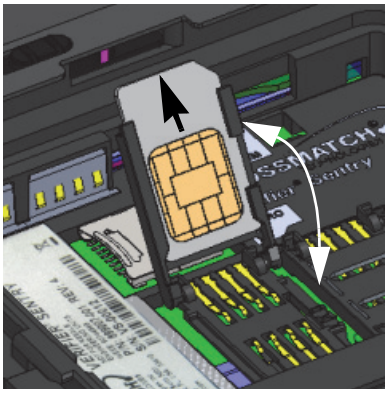

Insert the SIM card

Use the following procedure to insert a SIM card into the Sentry. The SIM card connector is in the side of the battery compartment next to the battery contacts.

1 Remove the battery. See **"Remove the battery" on page 21**.
2 Insert the SIM card into the SIM slot and press until the card stays in the slot.
3 Insert the battery. **"Install the battery" on page 22**.

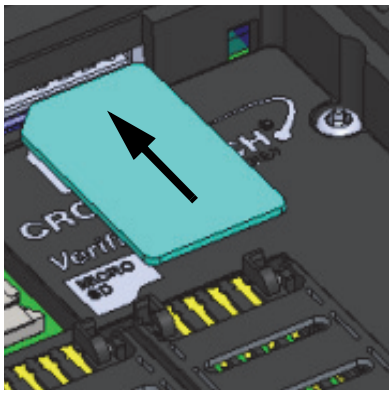

Remove the SIM card

Use the following procedure to remove a SIM card from the Sentry. The SIM card connector is in the side of the battery compartment next to the battery contacts.

1 Remove the battery. See **"Remove the battery" on page 21**.
2 Press the SIM card into the SIM slot until the card releases from the slot.
3 Remove the SIM card.
4 Insert the battery. See **"Install the battery" on page 22**.

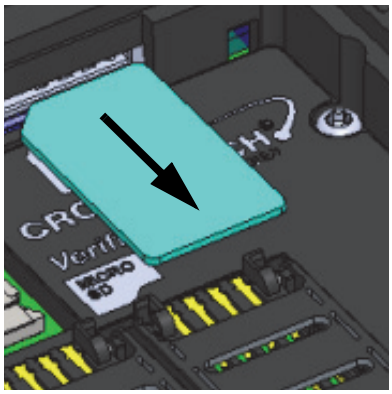

Insert the Micro SD card

Use the following procedure to insert the Micro SD card into the Sentry. The Micro SD card connector is in the floor of the battery compartment, next to the battery contacts.

1 Remove the battery. See **"Remove the battery" on page 21**.
2 Use a fingertip to slide the Micro SD cover toward the Sentry label and unlock the cover.
3 Open the cover.
4 Insert the Micro SD card into the cover.
5 Close the cover on the Micro SD card connector.
6 Insert the battery. See **"Install the battery" on page 22**.

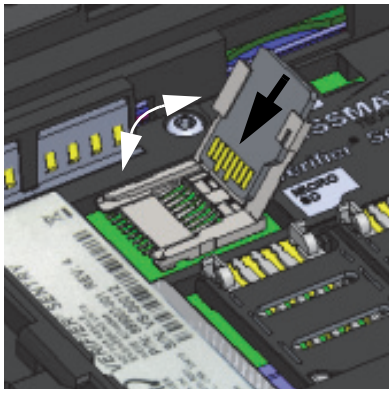

Remove the Micro SD card

Use the following procedure to remove the Micro SD card from the Sentry. The Micro SD card connector is in the floor of the battery compartment, next to the battery contacts.

1 Remove the battery. See **“Remove the battery” on page 21**.
2 Use a fingertip to slide the Micro SD cover toward the Sentry label and unlock the cover.
3 Open the cover.
4 Remove the Micro SD card.
5 Close and lock the cover on the Micro SD card connector.
6 Insert the battery. See **“Install the battery” on page 22**.

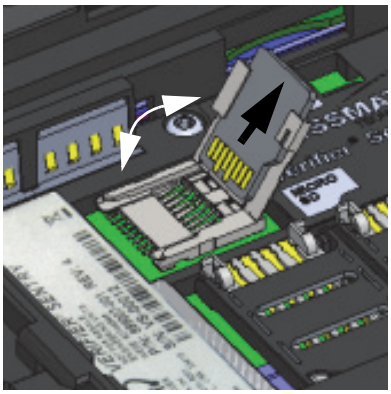

Find the Product Label

Use the following procedure to find the product label for the Sentry.

1 Remove the battery. See **“Remove the battery” on page 21**.
2 The product label is visible in the battery compartment near the two SAM card connectors.
3 Insert the battery. See **“Install the battery” on page 22**.

Replace the fingerprint sensor

If the fingerprint sensor must be changed, Crossmatch provides a Sensor Replacement kit. The part number of the kit is 8880125-001. The kit includes a sensor, a special tool and complete instructions to replace the sensor.

Customer Care

THIS CHAPTER DESCRIBES THE TECHNICAL ASSISTANCE AVAILABLE FOR THE SENTRY AND PROVIDES CONTACT INFORMATION.

Technical Support

Technical support from the Customer Care department is available for the Sentry.

E-mail

Crossmatch Customer Care provides free technical support on-line during the warranty period, in the order that the requests are received.

Global
CustomerCare@crossmatch.com

If the warranty has expired, use the telephone or facsimile to contact the Customer Care department.

Telephone and facsimile

The Customer Care is available at the following telephone numbers:

Global
Monday- Friday 8 am to 6 pm EST
Customer Care Tel: **1.866.276.7761** (**Toll Free**) Tel: 1.561.622.9210 (International) Fax: **1.561.622.8769**

Technical support is available for the Sentry during the warranty period at zero charge (see **"Warranty"** for Warranty Terms). After the warranty has expired, technical support is available at a given cost per hour. Contact the Customer Care department.

The Customer Care for the software products and the services purchased from Crossmatch is not included in the warranty. The Customer Care for other products is available at a given cost to the customer.

When you contact the Customer Care department, make sure that you can provide the following information:

- Company name
- Contact person
- The Sentry serial number
- The error messages that appear on the screen

Return and repair of the Sentry

You must receive an RMA number to return the Sentry for repair or replacement. Contact the Customer Care department to request and receive an RMA number. Put the RMA number on the outside of the box and on the label.

North and South America
Crossmatch 3960 RCA Boulevard, Suite 6001 Palm Beach Gardens, Florida 33410 USA RMA: Rnnnn.nnnn

The product is sent to the correct department for service or replacement, then returned to the customer. Any product sent to Crossmatch without an RMA number is returned.

Delivery costs

The product is in the warranty period

- The customer accepts all charges to send the product to Crossmatch for service.
- Crossmatch accepts all charges to return the product to the customer.

The product is not in the warranty period

- The customer accepts all charges.

Note

You must return a product in the original boxes. If the original boxes are not available, contact the Customer Care department for instructions.

Contact information

Corporate Headquarters

Crossmatch

3950 RCA Boulevard, Suite 5001

Palm Beach Gardens, FL 33410

USA

T: +1 (561) 622-1650

F: +1 (561) 622-9938

T: (866) 725-3926 (Toll Free)

General Mailbox: info@crossmatch.com

Sales Department: sales@crossmatch.com

Customer Care: CustomerCare@crossmatch.com

Corporate Web Page: www.crossmatch.com

THIS CHAPTER CONTAINS THE CROSSMATCH WARRANTY FOR THE SENTRY.

LIMITED WARRANTY

Cross Match Technologies, Inc. ("***Crossmatch***") warrants that the Crossmatch Equipment you have purchased will be free from defects in material and workmanship in normal service and under normal conditions for a period of one year from the date of shipment. Normal service and normal conditions are defined in the documentation. This Limited Warranty is subject to the terms and conditions set forth below.

Repair or replacement: Unless otherwise stated herein, the sole obligation of Crossmatch and your exclusive remedy and recourse under this Limited Warranty is for Crossmatch, at its sole election, to either (i) repair the suspected defective Equipment and return the same to you or (ii) replace the suspected defective Equipment, all on the terms set forth below. The repair or replacement will provide you with Equipment, which in Crossmatch's opinion, performs consistently with its age and usage.

If you become aware that your Crossmatch Equipment is defective in material or workmanship in normal service and under normal conditions during its one year Limited Warranty period, then you must promptly contact Crossmatch's Customer Care Center between Monday through Friday, 8:00am to 6:00pm EST, excluding Crossmatch holidays, describe the suspected defect in detail and request a Return Merchandise Authorization ("***RMA***") number prior to sending the affected Equipment for repair or requesting a replacement. Please see your equipment manual for more information on RMA's. You will pay the freight to send the Equipment to Crossmatch's designated Service Center, and Crossmatch will pay the freight to return the repaired Equipment to you. Each repaired or replacement Equipment is warranted (as set forth herein) for the remaining portion of the original one-year Limited Warranty.

THE FOREGOING CONSTITUTES YOUR SOLE AND EXCLUSIVE REMEDY AND CROSSMATCH'S SOLE AND EXCLUSIVE LIABILITY IN CONNECTION WITH YOUR CROSSMATCH EQUIPMENT, AND IS IN LIEU OF ANY AND ALL OTHER REMEDIES WHICH MAY BE AVAILABLE TO YOU.

Limitations: This limited warranty does not cover visits to repair the Crossmatch Equipment at your premises, or the commissioning of the Equipment on site. This Limited Warranty is not a warranty, guarantee or promise that your Crossmatch Equipment will conform to its specification or will not fail.

Crossmatch shall incur no liability under this Limited Warranty and this Limited Warranty is voidable by Crossmatch if in Crossmatch's sole reasonable opinion: (a) the Equipment is used other than under normal use and under proper environmental and/or electrical conditions, as specified in the manual; (b) the Equipment is not maintained as specified in the equipment manual; (c) the Equipment is subject to abuse, misuse, neglect, accident, flooding, storm, lightning, power surges, dirty power, third-party errors or omissions, or acts of God; (d) the Equipment is modified or altered (unless expressly authorized in writing by Crossmatch); (e) the Equipment is installed or used in combination or in assembly with equipment or other products not supplied or authorized by Crossmatch; (f) there is a failure to follow specific restrictions or operating instructions; (g) database recovery, (h) Crossmatch on-site support, (i) remedial customer training; (j) user or virus caused software reloads; (k) data migration to new platform; or (l) payment for the Equipment has not been timely made.

The Limited Warranty does not cover nondurable consumable items including, but not limited to, batteries, paper, silicon pads, cleaning solution, towels, printer cartridges and cables. Replacement supplies of these items may be ordered by contacting Crossmatch Sales at 866-725-3926 (toll free in the US) or 561-622-9722. This Limited Warranty does not cover third party peripheral equipment (such as laptops and printers) that is not connected or otherwise used in conjunction with the Crossmatch Equipment. Customers should contact the manufacturer of such third party equipment regarding suspected defects in such equipment.

Crossmatch's obligations hereunder are contingent upon your providing the Equipment serial number as proof-of-purchase, and upon Crossmatch's determination that the suspected malfunction is actually due to defects in material or workmanship.

THIS LIMITED WARRANTY IS IN LIEU OF ALL OTHER WARRANTIES RELATED TO THE CROSSMATCH EQUIPMENT, WHETHER EXPRESS, IMPLIED, OR STATUTORY, INCLUDING THE WARRANTIES OF MERCHANTABILITY AND FITNESS FOR A PARTICULAR PURPOSE, ALL OF WHICH ARE HEREBY EXPRESSLY DISCLAIMED BY CROSSMATCH. THIS LIMITED WARRANTY IS NOT TRANSFERABLE OR ASSIGNABLE TO ANY THIRD PARTY AND SHALL BE FOR THE SOLE AND EXCLUSIVE BENEFIT OF THE ORIGINAL OEM OF THE CROSSMATCH EQUIPMENT

COVERED HEREUNDER; ANY ATTEMPTED TRANSFER OR ASSIGNMENT HEREOF SHALL BE VOID AB INITIO.

Crossmatch reserves the right to improve/modify equipment at any time, at its sole discretion, as it deems necessary.

Out of warranty repairs: When warranty coverage for your Crossmatch Equipment lapses, or for repairs or replacements not covered by Crossmatch's warranty, (i) you will pay for all repairs at Crossmatch's then-prevailing hourly labor rate (with a one hour minimum) plus parts and shipping, (ii) you will pay Crossmatch's then-current price for all replacement Equipment plus shipping, and (iii) you will pay Crossmatch's then-prevailing hourly labor rate (with a one hour minimum after the first 15 minutes) for telephone support in 15 minute increments.

To obtain out-of-warranty service, you must obtain an RMA number and send the affected Equipment, at your expense, to the designated Crossmatch Service Center for inspection. You will be contacted with an estimated price and time of repair or replacement after analysis. No repairs or replacements will be made until Crossmatch receives a Purchase Order or credit card number from you. You shall pay return freight charges, which will be added to the invoice, for the return of the repaired or replaced Equipment.

In the event you decide not to have a unit repaired or replaced after receiving a repair estimate, there will be a one hour labor charge at the prevailing hourly rate for evaluation plus return freight charges.

At your request, Crossmatch will, for a premium, ship a refurbished unit to you in exchange for the failed unit. Crossmatch will contact you with a price for the exchange after receipt of the failed unit. The shipment will be made when Crossmatch receives a Purchase Order or credit card number from you. You will pay return freight charges, which will be added to the invoice, for the exchange unit. The original returned Equipment will become the property of Crossmatch and will not be returned to you. The refurbished unit will retain the remaining warranty term of the original returned Equipment.

Index

A
accessories for the Sentry **3**
alignment slots for the docking station **9**, **10**
applications **3**
attachment bars for the hand strap **9**
Auto Capture™ **2**

B
back of the Sentry **9**
battery compartment cover **9**
battery cover release latch **9**
battery disposal **4**
bezel cover release **10**
biometric / credential capture **2**
bluetooth **2**
bottom attachment for the hand strap **10**
bottom of the Sentry **10**
button to decrease the volume **8**

C
camera and camera lens **9**
capture a photograph **17**, **18**
capture and verify the biometrics **17**
change the battery **21**
charge light **6**
charge point **7**
company
    sales number **26**
contact card slot **8**
contact information **26**
    corporate headquarters **26**
contactless card reader **9**
corporate headquarters **26**
corporate web page **26**
Crossmatch WEEE registration number **4**

D
data connection for an accessory **7**
delivery costs **26**
desktop for the Sentry **11**
device endpoint **7**
docking station alignment slots **9**
docking station connection **10**

E
e-mail **25**
e-mail, *see* ***contact information***

F
FCC RF exposure requirements **3**
FCC statement **3**
flat fingerprints **2**
flats **2**
freight guidelines **26**
    not under warranty **26**
    under warranty **26**
front of the Sentry **6**

G
glossary **2**
    Auto Capture™ **2**
    bluetooth **2**
    flat fingerprint **2**
    GPS **2**
    USB 2.0 **2**
    user **2**
    Wi-Fi **2**

H
hand strap attachment **10**
help **25**
    technical **25**
how this book is arranged **1**
how to use the Sentry **11**, **21**, **25**, **27**

I
Industry Canada statement **3**
insert a micro sd card **23**
insert a sam card **22**
insert a simm card **23**
insert the Micro SD card **23**
insert the SIM card **23**
install the battery **22**

L
left side of the Sentry **7**
licenses
    the Cellular License information for Gemalto M2M GmbH **4**
    Wi-Fi/Bluetooth License from LS Research **4**
light source for the bar code reader **9**

M
microphone **6**

N
not under warranty **26**

P
photo light source **9**
platen **2**
platen bezel **10**
platen surface **6**
product in warranty period **26**
product label for the Sentry **24**
product not in warranty period **26**

R
read a barcode **18**
read a contact card **18**
read an epassport **16**
recycling information **4**
remove a SAM card **22**
remove the battery **21**
remove the Micro SD card **24**
remove the SIM card **23**

return and repair of the Avenger **26**
returns and repair **26**
right side of the Sentry **8**
right side of the sentry **8**
rma number **26**

S
scan a contact card **13**
scan a contactless card **14**
Sentry
- accessories **3**
- attachment for the hand strap **10**
- back **9**
- battery compartment cover **9**
- bezel around the platen **10**
- bottom **10**
- bottom attachment for the hand strap **10**
- button to decrease the volume **8**
- button to increase the volume **8**
- camera and camera lens **9**
- capture a photograph **18**
- capture and verify the biometrics **17**
- charge light **6**
- charge point **7**
- connection point for the optional docking station **10**
- cover for the battery compartment **9**
- data connection for an accessory **7**
- desktop **11**
- docking station alignment slots **10**
- front **6**
- left side **7**
- light source for photos **9**
- light source for the bar code reader **9**
- microphone **6**
- platen surface **6**
- read a barcode **18**
- reader for a contactless card **9**
- release for the bezel cover **10**
- release latch for the battery cover **9**
- right side **8**
- scan a contact card **13**
- scan a contactless card **14**
- slot for a contact card **8**
- speaker **6**
- start **11**
- start button **8**
- tasks **25**
- top **10**
- touch screen **6**
- USB connector **7**
- USB connector cover **7**

speaker **6**
specifications **2**
standards **1**
start button **8**
start the Sentry **11**
supplies **26**

T
tasks with the Sentry **25**
technical help **25**
technical support **25**
- e-mail
- returns and repair **26**
- telephone and fax **25**

telephone and facsimile **25**
terms
- platen **2**

top of the Sentry **10**
touch screen **6**

U
under warranty **26**
USB 2.0 **2**
USB connector **7**
USB connector cover **7**
user **2**

V
volume buttons **8**

W
web page **26**
WEEE directive **4**
WEEE registration number **4**
WiFi **2**