VisionPlate™

USER MANUAL

HITACHI

Copyright

© 2003 Hitachi Data Systems. All rights reserved.

This publication contains information that is protected by copyright. No part of it may be reproduced, transmitted, transcribed, stored in a retrieval system, or translated into any language without permission from Hitachi Data Systems.

Trademarks

Crusoe is a trademark of Transmeta Corporation.

Microsoft, MS-DOS, and Windows are registered trademarks of Microsoft Corporation.

IBM and PS/2 are trademarks of International Business Machines Corporation.

All trademarks, trade names and service marks used herein are the rightful property of their respective owners.

Table of Contents

Disclaimer 5

Chapter 1 Safety Information 6

1.1 Introduction 6

1.2 Tips for Safe Operation 6
Things to Keep in Mind 6

1.3 Vision Risk Factors 7
Things to Keep in Mind 7

1.4 Hand and Wrist Motor Risk Factors 8
Things to Keep in Mind 8

1.5 Body Support Risk Factors 9
Things to Keep in Mind 9

1.6 Product Safety Guidelines 9
Things to Keep in Mind 9

1.7 Main Battery Pack Guidelines 10
Things to Keep in Mind 10

1.8 Power Cord Guidelines 10
Things to Keep in Mind 10

1.9 AC Adapter Guidelines 11
Things to Keep in Mind 11

1.10 Restrictions for AC Adapters 11

1.11 Liquid Crystal Display (LCD) Guidelines 11
Things to Keep in Mind 11

1.12 Proper Treatment of Your Hitachi Product 12
Things to Keep in Mind 12

1.13 Safety and Regulatory Compliance 13
FCC Part 15 Compliance Statement 13
Canadian EMI Compliance Statement 13
FCC Warning 13
UL1604 Compliance Statement 14

1.14 General Safety Guidelines 15

1.15 Battery Safety Guidelines 16

1.16 Operating Safety Guidelines 16

Chapter 2 Getting Started 17

2.1 Identifying Components 17
Buttons and Lamps 17
Left Side Connectors 18
Right Side Connectors 19

Cradle (optional) 20

2.2 Setting up the VisionPlate 21
Direct to Outlet Connection 21
Desktop Use (with optional Cradle) 22

2.3 Mobile Use 25

2.4 Powering the VisionPlate On and Off 27
Powering the VisionPlate On 27
Powering the VisionPlate Off 28

Chapter 3 Using Your VisionPlate 29

3.1 Using the Stylus 29

3.2 Touchscreen Calibration 31

3.3 Adjusting the Brightness of the LCD 32

3.4 Adjusting the Volume 33

3.5 Battery Pack 34
Charging the Battery Pack 34
The Charge Lamp 34
Battery Charging Time 34
Battery Life 35
Battery Maintenance 35
General Precautions 36
Entering the Power Saving Mode 37
Exiting Power Saving Mode 37
Low Battery Notification 38

Chapter 4 Section 4. Expandability 38

4.1 PC Cards 38
Installing a PC Card 38
Removing a PC Card 39

4.2 CF Cards 41
Installing a CF Card 41
Removing a CF Card 42

Chapter 5 Section 5. VisionPlate Troubleshooting Tips 45

5.1 Troubleshooting the Display 45

5.2 Troubleshooting the Stylus 45

5.3 Troubleshooting Power Connections 45

Specifications 46

Disclaimer

Hitachi Data Systems has taken reasonable steps to provide complete and accurate information in this document. However, due to continuous efforts being made to improve and update the VisionPlate product, Hitachi Data Systems shall not be liable for any technical or editorial errors or omissions contained in this document, or for any damage, direct or indirect, from discrepancies between this document and the products it describes.

Information in this document is subject to change without notice and does not represent a commitment on the part of Hitachi Data Systems.

Hitachi Data Systems strongly recommends that you keep separate, permanent written records of all important data and perform periodic backups. Data can be lost or altered in virtually any electronic memory product under certain circumstances. Hitachi Data Systems assumes no responsibility for data loss or data otherwise rendered unusable, whether as a result of improper use, repairs, defects, battery replacement, use after the specified battery life has expired, or any other causes.

Hitachi Data Systems assumes no responsibility, directly or indirectly, for financial losses or claims from third persons resulting from the use of this product and any of its functions, such as stolen credit card numbers, the loss of, or alteration of, stored data, etc.

Chapter 1 Safety Information

.1 Introduction

This product is designed to operate safely when reasonable safety practices are followed.

The guidelines outlined in this document describe potential risks associated with product operation and identify important safety practices designed to help you minimize these risks and avoid injury to you and your product. If you have additional questions about your product and how to operate it in a safe manner, please contact your Hitachi Customer Service or an authorized Support Representative.

.2 Tips for Safe Operation

The VisionPlate is designed for the mobile user's needs. It is compact, lightweight, and extremely portable. Because the VisionPlate is intended for frequent use in the field, it is conceivable that the unit might be used in an environment where lighting conditions are poor, viewing angles and distances from the screen are inconvenient, where seating conditions may adversely affect arm and wrist positions, and where adequate neck and back support is lacking.

Some studies suggest that prolonged periods of tapping, typing, improper workstation setup, incorrect work habits, personal health problems, and other factors might be linked to injuries such as carpal tunnel syndrome, tendonitis, and eyestrain.

Warning signs of these conditions include:

- Aching, soreness, burning sensations, throbbing, tingling, or numbness in the hands, wrists, arms, or neck.
- Blurred vision or persistent headaches.

Things to Keep in Mind

- If you are experiencing any of the above symptoms or similar pain, you should consult your physician immediately.
- The information contained in this document is not meant to be construed as medical advice.
- While using this product, you should schedule regular medical and visual checkups with your healthcare providers.
- If this product is your primary product at a fixed workplace, it might be more comfortable to use an external mouse, external keyboard, and other such devices.
- To avoid eyestrain and physical discomfort, the following guidelines should always be followed.

.3 Vision Risk Factors

Sustained viewing of screens can lead to fatigue, blurred or double vision, and headaches.

Some researchers believe that users who look at their screens for long durations can even undergo changes in how clearly and quickly they focus.

Things to Keep in Mind

- Maintain a desirable viewing angle of 20 to 35 degrees downward toward the center of the LCD screen.
- Place the display at a comfortable viewing distance, usually about 20 to 24 inches away from you.
- Periodically adjust the product during the work session to change the focal distance to the LCD.
- Always locate the LCD directly in front of you.
- Always adjust the brightness and contrast controls to maximize the character and image quality on the LCD.
- Take frequent, short stretching or exercise breaks.
- Frequently adjust your position in your chair.
- Select light sources that are located outside the peripheral field of vision in order to minimize direct and reflected glare.
- Whenever possible, use indirect lighting to avoid reflective bright spots on the LCD.

.4 Hand and Wrist Motor Risk Factors

Using the keyboard, using the mouse, using the touch panel, writing, and grasping and handling paperwork might cause strain on the hand's fine motor functions and could lead to pain, swelling, and numbness that persists in the affected area, even when at rest.

Things to Keep in Mind

- Avoid sustained repetition of tasks without taking breaks. Take frequent breaks throughout the operating session, and perform stretching exercises.
- Avoid sitting in one position for long periods of time.
- Be aware that working in an awkward position could cause discomfort or stress to the back, neck, or shoulders.
- Periodically stretch, change your posture, and alternate between sitting and standing.
- When typing or tapping, ensure a neutral or straight wrist position by aligning the chair, work surface, and the product.
- Adjust your chair height so that your feet rest comfortably on the floor with your thighs parallel to the floor.

.5 Body Support Risk Factors

Prolonged sitting while using the product could lead to stress in the lower back and increased pressure on vertebrae.

Chairs can also apply local pressure on the backs of legs, cutting off blood flow to muscles.

Things to Keep in Mind

- Ensure that your workspace allows for free movement.
- Change positions while performing tasks.
- Work in a chair that allows adjustment of both the seat height and the tilt. Chairs with adjustable arm and back rests support the upper body and reduce pressure on the spine.

.6 Product Safety Guidelines

If repair or adjustment for your Hitachi Data Systems product is necessary, contact an authorized Hitachi Customer Service and Support Representative.

Things to Keep in Mind

- Never remove the cover or back panel of your Hitachi Data Systems product unless you have been instructed to do so by a Hitachi Customer Service or an authorized Support Representative.
- Removing the cover or back panel in an unauthorized manner could result in the risk of electric shock.
- Never disassemble your Hitachi Data Systems product or its electrical components, as doing so could possibly cause short-circuits that might damage the product.

.7 Main Battery Pack Guidelines

Use only the battery pack supplied with your Hitachi Data Systems product.

Always turn off the power to the product before replacing a battery pack.

Creating a short circuit in the main battery pack could cause a fire and could result in personal injury.

Causing the batteries to leak or disposing of them in an improper manner could pose a health hazard.

Always dispose of batteries in accordance with the laws of your local community.

Things to Keep in Mind

- Never accidentally or intentionally bring the battery terminals in contact with other metal objects.
- Never disassemble the battery pack or subject the battery pack to heat.
- Never put the battery pack into a fire.
- When disposing of battery packs, follow all community regulations that pertain to battery disposal.
- When disposing of the battery pack, cover the metal terminals with a non-conducting tape to prevent accidental short-circuiting.
- Use the battery pack supplied with the Hitachi Data Systems product only, as other battery packs could be incompatible with the Hitachi Data Systems product and could damage the product.
- Charge the battery pack while it is installed in the product or use the external battery charger that has been designated as an approved accessory.

. 8 Power Cord Guidelines

Never use damaged or worn power cords or plugs. Doing so could result in electric shock, burns, or fire.

Things to Keep in Mind

- When removing a plug from a socket, never bend or twist the power cord.
- Never place heavy objects on a power cord. Doing so could result in damage.
- To avoid damaging the power cord, always grasp the plug directly when unplugging the power cord.
- To obtain suitable power cord replacements, contact your Hitachi Customer Service or an authorized Support Representative.

Warning: The power cord for this product contains lead, a chemical known to the State of California to cause cancer, and birth defects or other reproductive harm.

. 9 AC Adapter Guidelines

Using any power source other than the Hitachi Data Systems AC adapter or power cord that comes with your product could result in exposure to electric shock hazards.

Things to Keep in Mind

- Never attempt to disassemble or repair an AC adapter.
- Always use a surge protector to protect your product from possible damage caused by a power surge.
- Always contact an authorized Hitachi Customer Service or an authorized Support Representative if repair or replacement is required.

.10 Restrictions for AC Adapters

- Use only the AC adapter and battery pack shipped with the VisionPlate.
- Product damage, personal injury, or fire could occur when using an unapproved AC adapter or battery pack as they could have inappropriate voltage, or a different maximum output current and polarity.
- When plugging in or unplugging the power supply cord, always hold the connector and not the cord. Be sure to plug the connector in completely.
- Connect only authorized Hitachi Data Systems products.
- Do not drop or apply excessive shock to the AC adapter and battery.
- Do not disassemble the AC adapter or the battery pack.

Note: It might not be appropriate to use your AC power adapter in certain mobile operating situations, such as during an airplane flight. Please remember that each airline company has its own safety policies, rules and regulations regarding the use of electronic devices during flights, including these products. On flights that allow the use of these products, check with the Flight Attendant to confirm the time periods when products are allowed to operate before using the in-flight power adapter.

. 11 Liquid Crystal Display (LCD) Guidelines

If the VisionPlate's LCD is damaged, the liquid contained within the display could leak.

Any ingestion of this liquid can result in serious bodily injury or illness.

Things to Keep in Mind

- Never apply force to the LCD and surrounding screen by pushing or squeezing it.

- If the LCD leaks, causing the liquid to come in contact with any part of your body, use large amounts of water to immediately wash the liquid off.
- Wash any clothes that have come into contact with LCD leakage immediately, using a synthetic detergent.
- For instructions on the safe disposal and replacement of a damaged LCD, contact an authorized Hitachi Customer Service or an authorized Support Representative.

Warning: The LCD contains Mercury. Do not put the LCD into the trash. Recycle or dispose of the LCD as Hazardous Waste.

. 12 Proper Treatment of Your Hitachi Product

Allowing any metal objects, such as screws or paper clips, to fall into the VisionPlate could result in a short circuit, fire, or other internal damage.

To avoid serious damage, never allow any liquids to spill into any part of your Hitachi product and never expose the product to rain or other liquids when the peripheral covers are open.

Things to Keep in Mind

- Should any metal object fall into the VisionPlate, immediately turn off the power, unplug the power cord, and contact Hitachi Customer Service or an authorized Support Representative for assistance.
- Should the VisionPlate come into contact with rain or water when the peripheral covers are open, turn the unit off immediately and contact Hitachi Customer Service or an authorized Support Representative for assistance before attempting to use the product again.
- To avoid the potential of interfering with any airborne electronic navigation equipment, never operate the Hitachi product in any aircraft, unless an authorized airline representative has specifically granted permission.
- To prevent a potential malfunction or damage to the equipment, never place the product on top of or near a heating device; never expose it to prolonged direct sunlight; and never store it in an unventilated vehicle.
- During lightning storms, always unplug the power cord to protect the VisionPlate from possible damage caused by a power surge.
- If the VisionPlate incurs damage from being dropped or sharply struck, or if it emits an uncharacteristic odor or excessive heat, immediately unplug the power cord and shut off the VisionPlate.
- Contact an authorized Hitachi Customer Service or an authorized Support Representative for assistance.
- To prevent the possible occurrence of harmful internal condensation, always ensure that the VisionPlate has been allowed to warm up to room temperature after it has been exposed to cold temperatures.
- Although the VisionPlate has been designed for commercial environments, excessive dust, dirt, or moisture can cause possible damage to its internal components.

.13 Safety and Regulatory Compliance

FCC Part 15 Compliance Statement

Note: This equipment has been tested and found to comply with limits for a Class B digital device, pursuant to Part 15 of the FCC Rules.

These limits are designed to provide reasonable protection against harmful interference in a residential installation.

If an FCC label is not present, the unit is not approved.

This equipment generates, uses, and can radiate radio frequency energy and if not installed and used in accordance with the instructions, can cause harmful interference to radio communications.

However, there is no guarantee that the interference will not occur in a particular installation.

If this equipment does cause harmful interference to radio or television reception, which can be determined by turning the equipment off and on, try to correct the interference by doing one or more of the following:

- Reorient or relocate the receiving antenna.
- Increase the separation between the equipment and receiver.
- Plug the equipment and the receiver into different power outlets.
- Consult your dealer or an experienced radio/TV technician for help.

Note: Changes or modifications not expressly approved by the party responsible for compliance could void your authority to operate the equipment. If an FCC label is not present, the unit is not approved.

***Note*:** This device complies with Part 15 of the FCC Rules.

Operation is subject to the following two conditions:

1. This device should not cause harmful interference.

2. This device must accept any interference received, including interference that can cause undesired operation.

Important: This product requires the use of shielded cables and connectors. The use of non-shielded interfaced cables is prohibited.

Canadian EMI Compliance Statement

This Class B digital apparatus meets all requirements of the Canadian Interference-Causing Equipment Regulations.

Cet appareil numerique de la class B respecte toutes les exigences du Reglement sur le materiel brouilleur du Canada.

FCC Warning

Warning: FCC regulations state that any unauthorized changes or modifications to this equipment not expressly approved by the manufacturer could void the User's authority to operate this equipment.

Properly shielded and grounded cables and connectors must be used for connection to the boot computer and other peripherals in order to meet FCC emission limits.

This transmitter must not be co-located with any other transmitters or antennas.

UL1604 Compliance Statement

The VisionPlate has been investigated by Underwriters Laboratories for use in Class I, Division 2, Group A, B, C and D Hazardous Locations. At the back of the VisionPlate, the following label indicates that the unit is listed with UL.

If this label is not present, the unit is not approved for use in Hazardous Locations. The following instructions apply when using the UL-listed model in Class I, Division 2, Group A, B, C and D Hazardous Locations.

Warning: Do not connect or disconnect all connectors unless the work area is known to be nonhazardous.

- The AC adapter and Cradle for the VisionPlate are not listed for use in Class I, Division 2, Group A, B, C and D Hazardous Locations.
- Use only Hitachi battery pack part numbers PC-AB5900 or PC-AB5910.
- Do not insert or remove the battery pack unless the work area is known to be nonhazardous.
- Do not disassemble the VisionPlate or modify it in any way.

LISTED
6XA9
Data Processing Equipment
For use in
Hazardous Location:
Class 1 Division 2
Group A, B, C & D
Caution: Use only Batt. Pack (Li-ion)
Model: PC-AB5900 or PC-AB5910 by Hitachi Ltd.

INSTALLATION AND OPERATING INSTRUCTIONS:

1. THIS EQUIPMENT IS SUITABLE FOR USE IN CLASS I, DIVISION 2, GROUPS A, B, C AND D OR NON-HAZARDOUS LOCATIONS ONLY.

2. WARNING - EXPLOSION HAZARD - SUBSTITUTION OF COMPONENTS MAY IMPAIR SUITABILITY FOR CLASS I, DIVISION 2.

.14 General Safety Guidelines

- Follow all cautions and instructions marked on the product.
- Ensure that the operating voltage of your product is the same as the voltage of your local power supply. Otherwise, there is a risk of damage or electrical shock or fire. If voltage adaptation is required, consult your place of purchase.
- Use only the specified batteries to prevent battery explosion, battery leaks, fire, and injury.
- Whenever you detect any abnormal heat, smoke, noise, or smell when using the machine, stop operating the machine immediately, turn it off, and disconnect the power cord. If you continue to operate the machine under such conditions, there is a danger of electrical shock or fire.
- If lightning occurs while using the product, turn off the product. It is safe to use the product on battery mode, as long as the product is properly grounded.
- Except as described otherwise in this document, refer all servicing to qualified personnel.
- Immediately shut off the product and refer the product for servicing under the following conditions:
  - When the power cord or plug is damaged or frayed.
  - If liquid has been spilled into the product.
  - If the product has been dropped or the cover has been damaged.
- Arrange the electrical cords so that you do not trip over them. Failure to do so can result in personal injury and damage to the connected equipment.
- Never push objects of any kind into cabinet openings. They may touch dangerous voltage points or short parts that could result in fire or electrical shock.
- Before cleaning the product, turn off the product and disconnect the AC adapter.
- Do not expose the product to direct sunlight.
- Keep the product away from any magnetic devices or TVs.
- Do not drop the product.
- Keep all liquids away from the product and its accessories, especially when peripheral covers are open.
- Do not place containers with liquids or small metal objects, such as pins or paper clips, into the product. If any liquid or object falls into the product, and you continue to use it, there is a danger of electrical shock, fire, or malfunction.
- Do not use the product for any purpose other than for which it was intended. Such use can cause a malfunction or personal injury.
- Use only the AC adapter supplied with the product. If you use a different adapter, there is a danger of electrical shock, fire, or malfunction.
- Do not place any object on the power cord. Do not pull, press, bend, or rework the power cord; otherwise, there is a danger of electrical shock, fire, or malfunction.
- To disconnect the power cord from the wall outlet, pull it out by the plug. Never pull on the cord itself. Pulling on the cord can cause a line to break and could result in a fire.

.15 Battery Safety Guidelines

- Ensure that you replace the battery correctly. There is a risk of explosion if the battery is replaced incorrectly.
- Replace the battery only with the same type or an equivalent type, as recommended by the manufacturer.
- Always dispose of replaced batteries in accordance with the laws and regulations of your local community. Incorrect handling of a battery can cause a fire or explosion when exposed to heat.
- Never disassemble a battery.
- Keep batteries out of the reach of children.
- Never allow the batteries to heat up to 60 degrees Celsius (140 degrees Fahrenheit) or higher.
- Never burn the batteries or soak them in water.

Caution: Danger of explosion if battery is incorrectly replaced. Replace only with the same battery type that is recommended by the manufacturer. Dispose of used batteries according to the manufacturer's instructions.

.16 Operating Safety Guidelines

- Adjust the angle of the display so that you look down slightly at the display. The distance between your eyes and the display should be 50 to 60 cm (20 to 24 inches).
- Adjust the brightness of your display and the room lighting to prevent any reflection or glare on the display.
- Avoid exhaustion by taking frequent breaks.

Chapter 2 Getting Started

Thank you and congratulations on the purchase of your Hitachi VisionPlate wireless tablet. This section describes how to set up your VisionPlate and how to turn the VisionPlate on and off.

.1 Identifying Components

The following illustration shows the front panel of your VisionPlate:

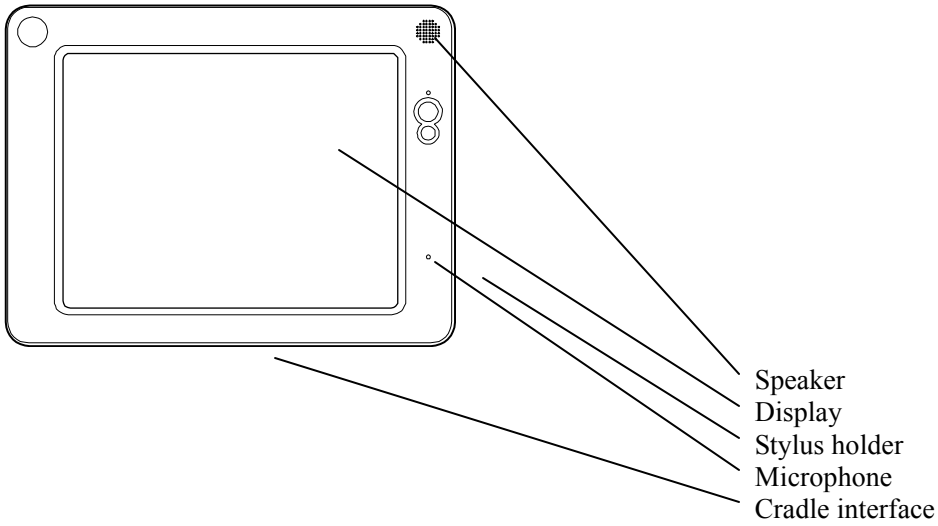

Buttons and Lamps

The following illustration shows the front panel buttons:

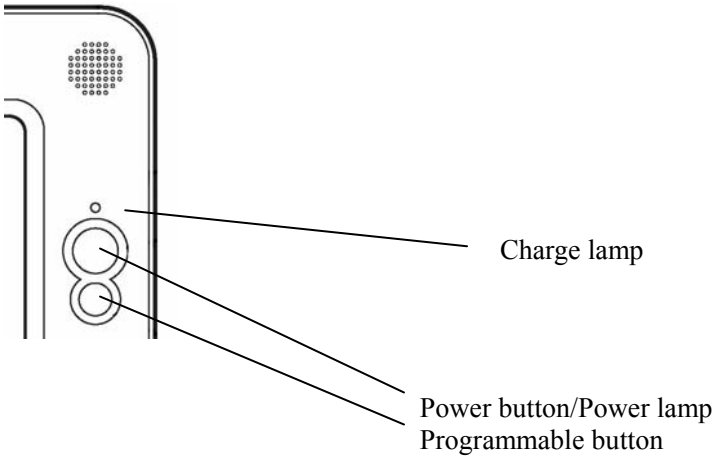

The following table provides a description of the various states of the charge lamp indicators:

	State	Meaning
Charge Lamp	Solid Orange	Charging battery
	Solid Green	Charged battery
	Blinking Red	Low battery
	Off	Sufficient charge
Power Button/Power Lamp	Solid Green	In operation
	Blinking Green	Power saving mode

Left Side Connectors

The following illustration shows the left side connectors:

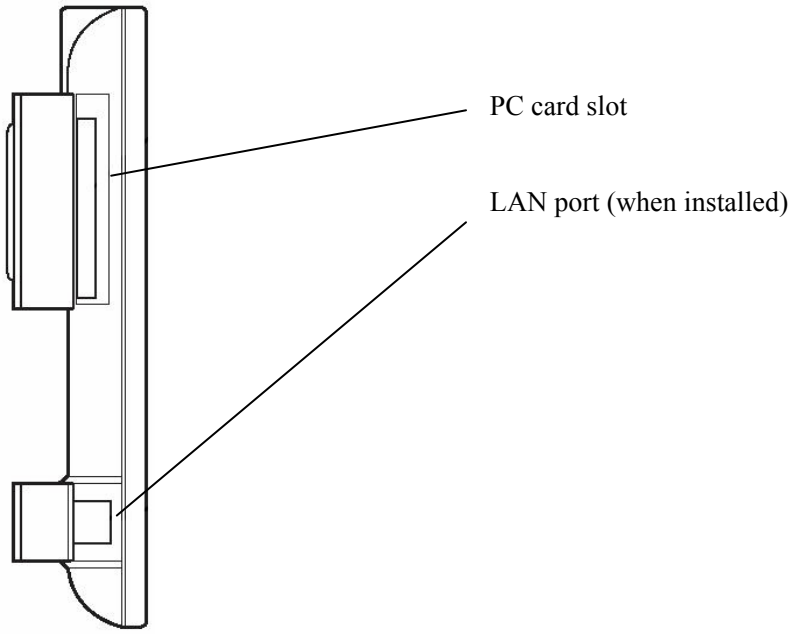

Right Side Connectors

The following illustration shows the right side connectors:

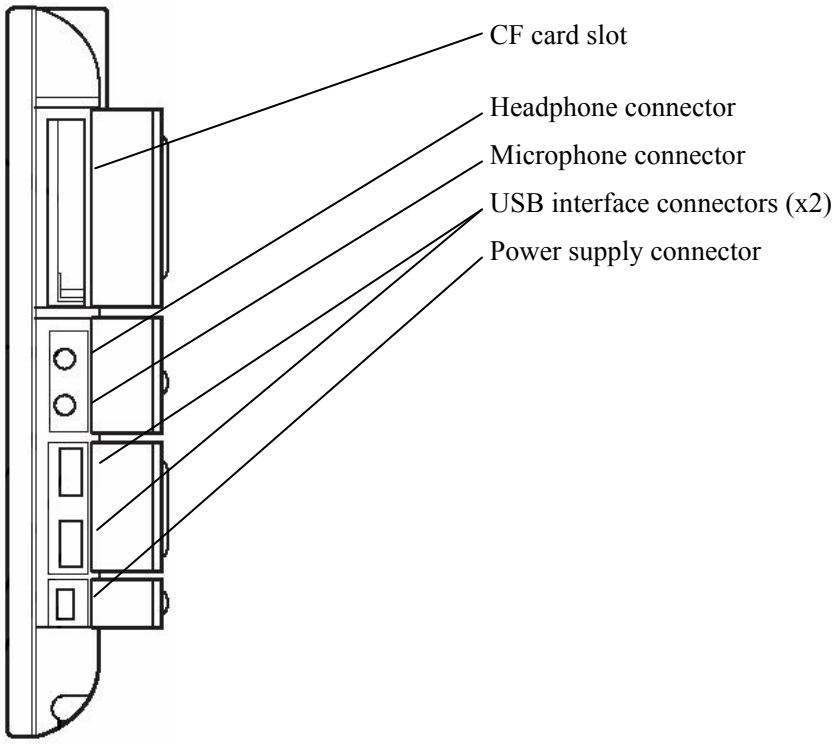

Cradle (optional)

The following illustration shows the optional Cradle:

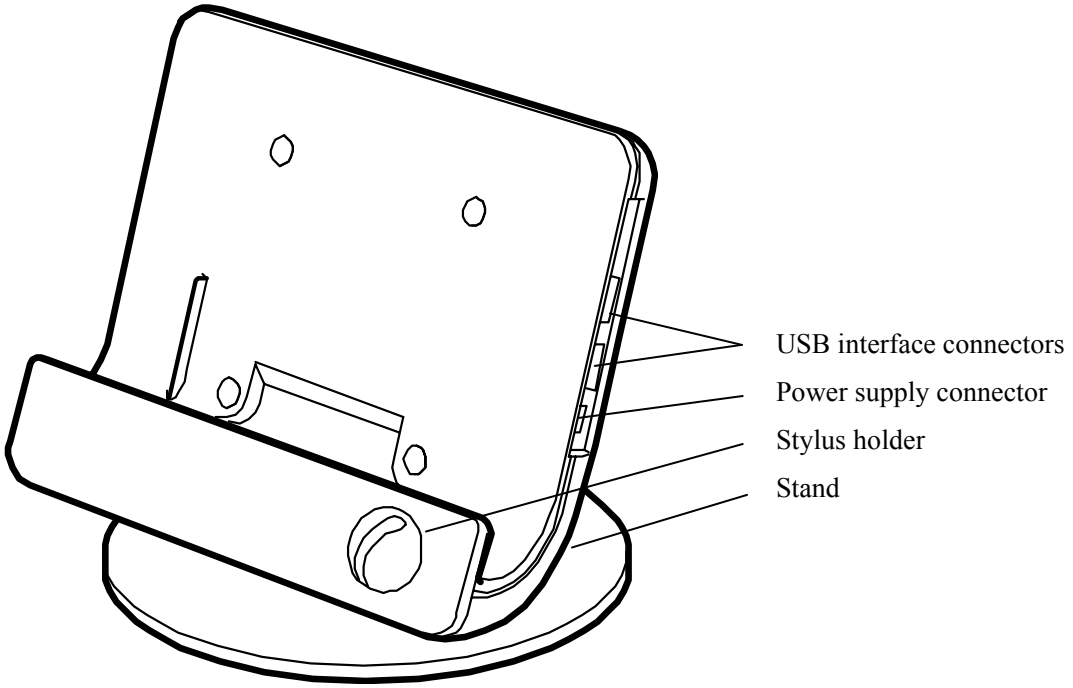

.2 Setting up the VisionPlate

The VisionPlate can be plugged directly into an outlet (see Direct-to-Outlet Connection), as a desktop device operated through the optional cradle (see Desktop Use), or as a mobile unit through battery operation and wireless connectivity (see Mobile Use).

Direct to Outlet Connection

Plug the AC adapter into the Power supply connector, which is located on the right side of the VisionPlate, with the directional arrow facing down, as shown in the following illustration:

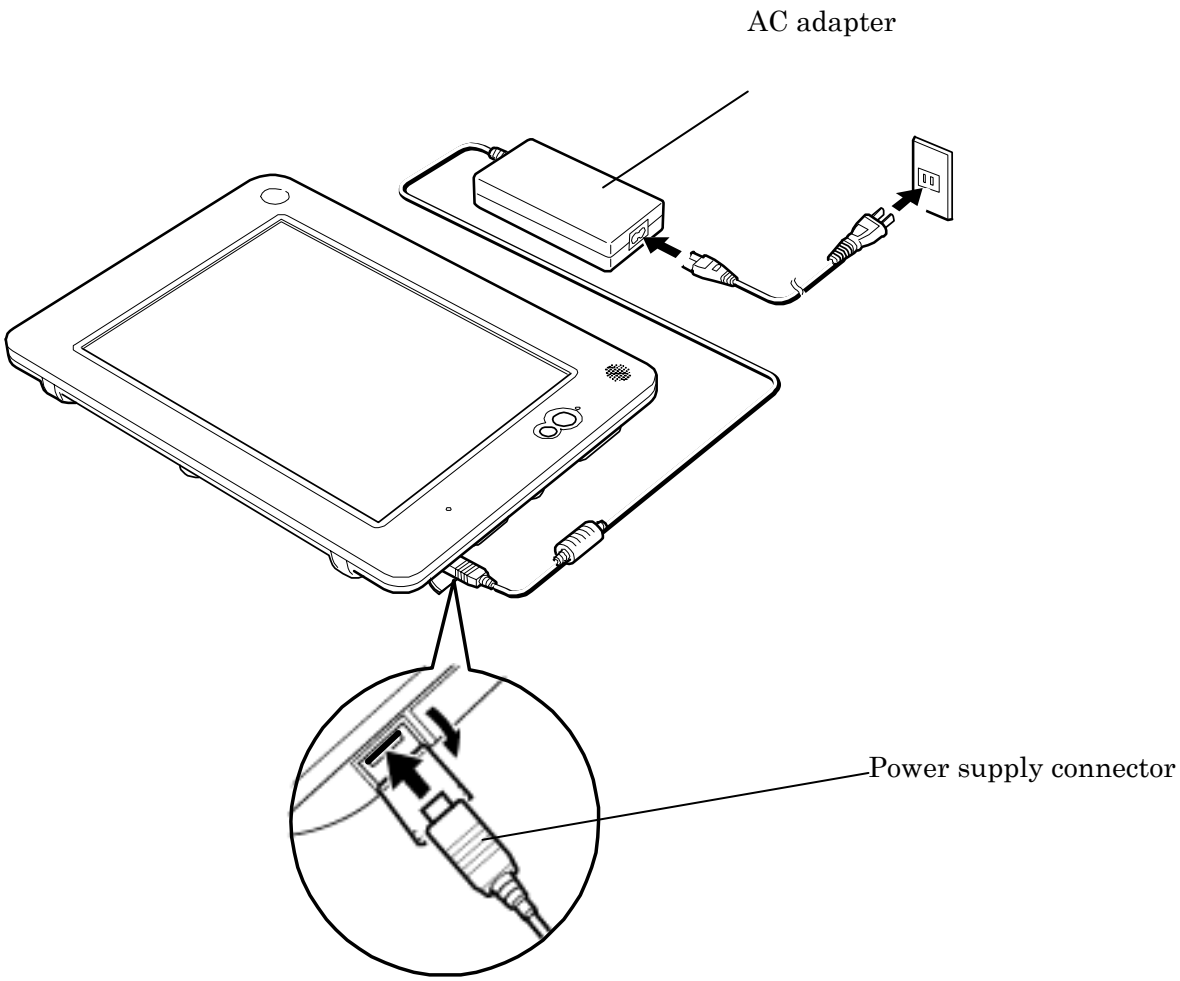

Desktop Use (with optional Cradle)

Your VisionPlate can be used with an optional Cradle.

The AC adapter, a USB keyboard, and a USB mouse can be connected directly to the Cradle.

To use your VisionPlate with the optional Cradle, do the following:

1. Plug the AC adapter into the Power supply connector of the Cradle adapter, with the directional arrow facing away from you, as shown in the following illustration:

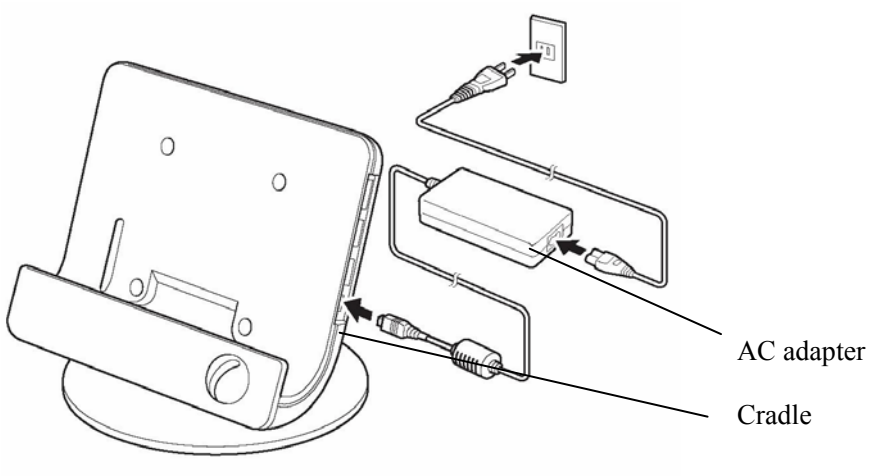

2. Open the Cradle interface cover (located on the bottom of the VisionPlate), and verify that it extends downward from the VisionPlate so as not to interfere with the docking connector.

3. Slide your VisionPlate into the Cradle, as shown in the following illustration:

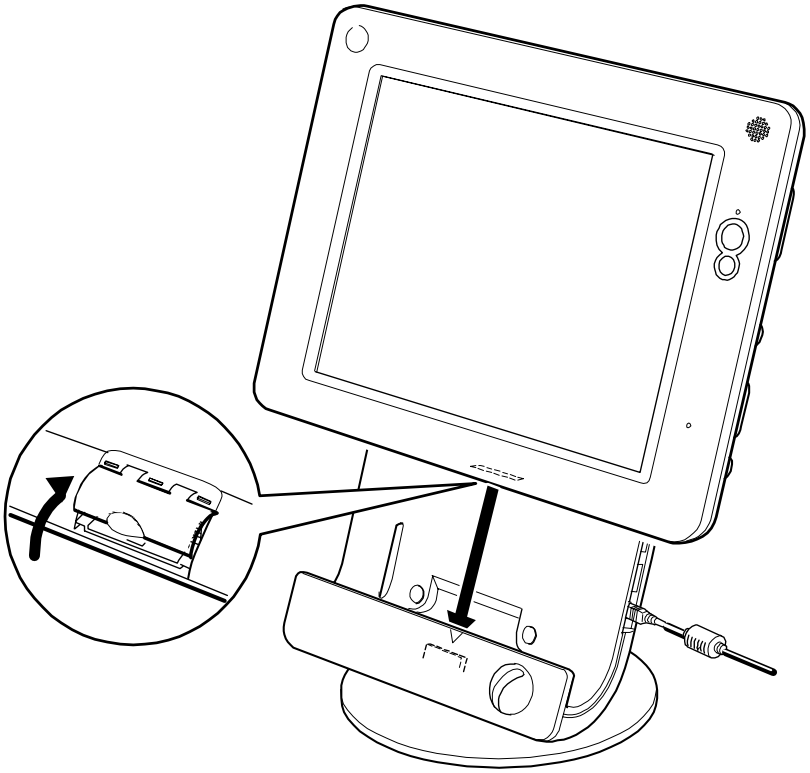

Note: The angle of the Cradle can be adjusted by loosening the two screws on the bottom of the stand, as shown in the following illustration:

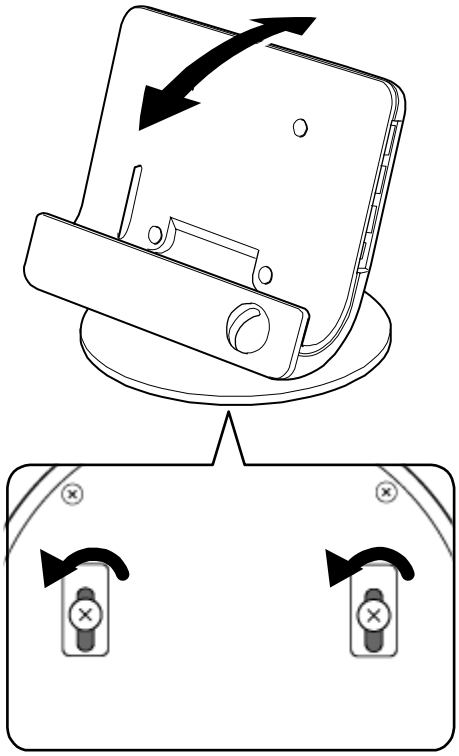

.3 Mobile Use

The VisionPlate comes with a lithium ion battery pack that can be used for mobile applications. When your VisionPlate is powered on with the battery pack installed for the first time, an AC adapter must be plugged in to fully charge the battery.

To install the battery in your VisionPlate, do the following:

1. Remove the two screws on the back side of the unit and then remove the battery cover, as shown in the following illustration:

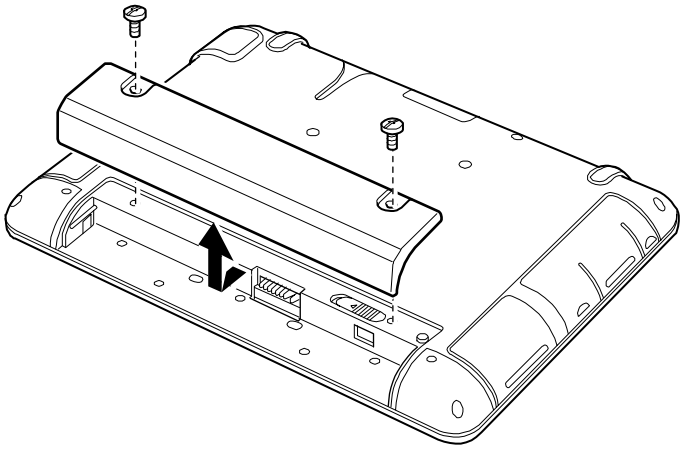

2. Insert the battery into the VisionPlate, as shown in the following illustration:

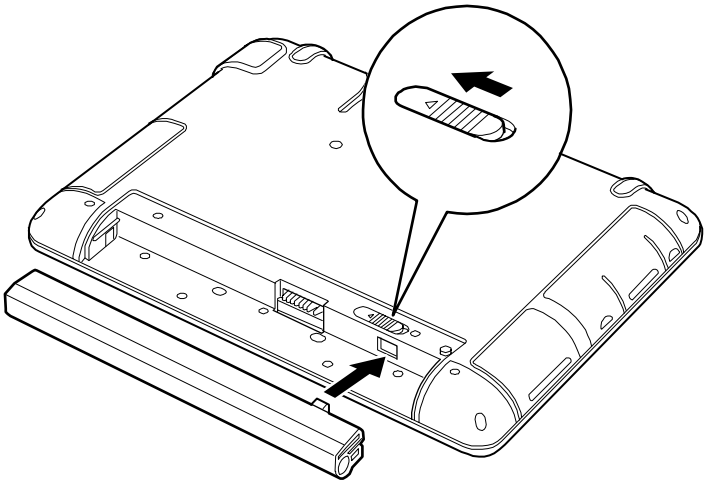

Note: When you remove the battery, slide the lock according to the directional arrow.

3. Replace the battery cover, and then fasten the screws, as shown in the following illustration:

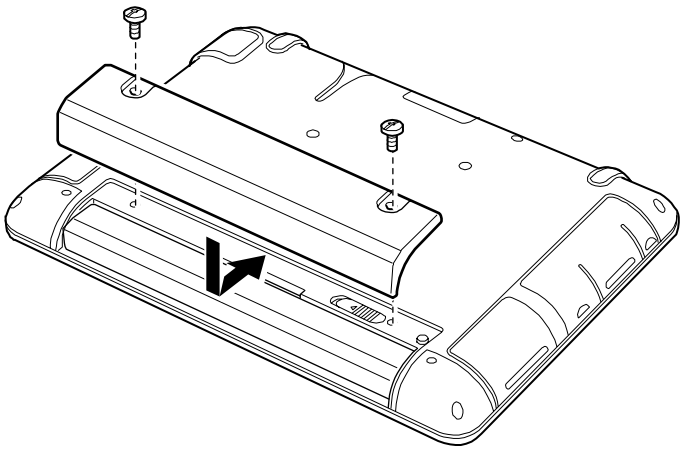

. 4 Powering the VisionPlate On and Off

This section describes how to turn the power to the VisionPlate on and off.

Powering the VisionPlate On

To turn the VisionPlate on, press the Power button, as shown in the following illustration:

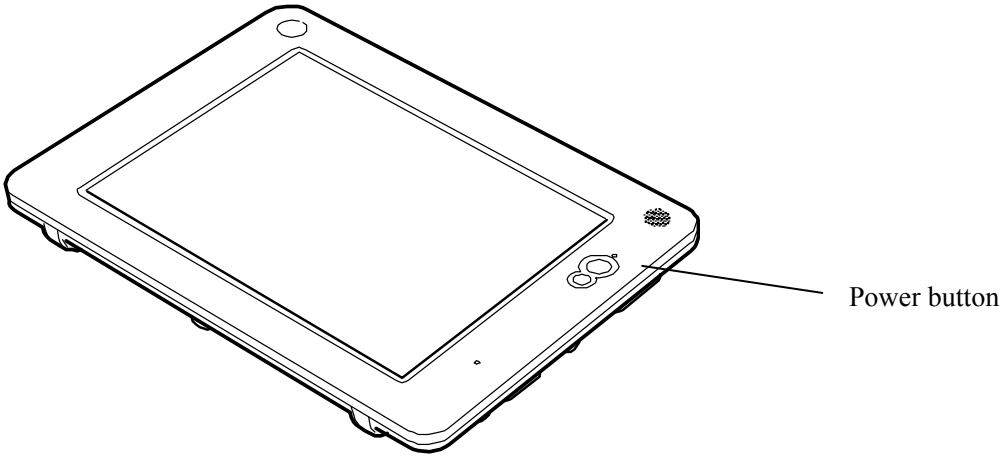

Powering the VisionPlate Off

To turn off the VisionPlate, tap System, and then tap Shutdown, as shown in the following illustration. To force a power off, press and hold the Power button for four seconds.

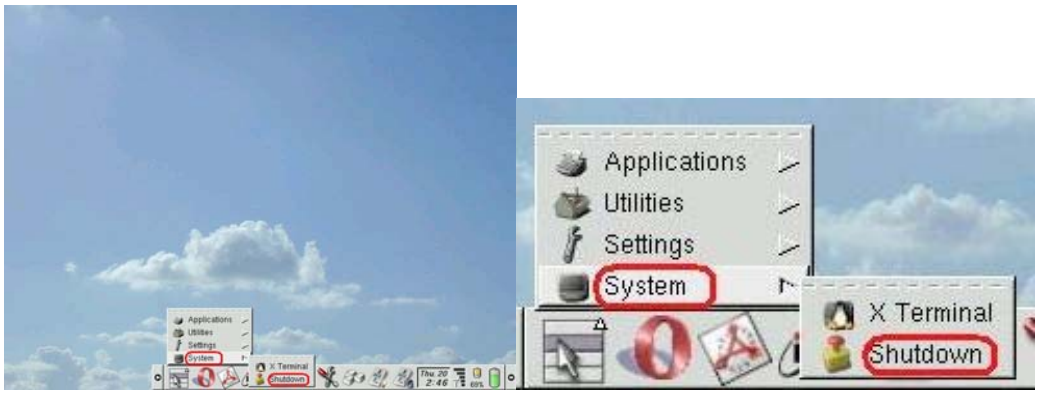

Important: Unplug the AC cord when your VisionPlate is not used for an extended period of time.

Note: All of the procedures provided in this document refer to the MIDORI Linux operating system. Refer to your operating system manuals for other operating systems.

Chapter 3 Using Your VisionPlate

This section describes how to use the features of your VisionPlate.

. 1 Using the Stylus

The stylus is used to operate the VisionPlate. The stylus has three basic actions, which are described in this section.

Single tap: Single tapping involves touching the screen softly with the stylus.Å@This action is the same as a single click of the left button of a mouse, and is used to select an item.

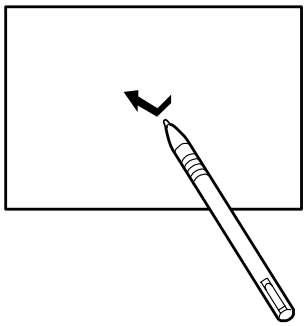

Double tap: Double tapping involves touching the screen softly twice in rapid succession with the stylus. This action is the same as a double-click of the left button of a mouse and is used to open an item.

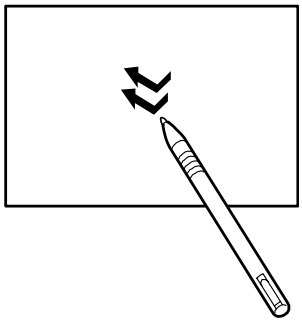

Drag/Drag and Drop: Dragging involves touching the screen with the stylus, and moving the stylus on the screen surface while the stylus is still touching the screen. Drag and Drop involves selecting an object by touching the screen with the stylus and then lifting the stylus after moving the object to another location.

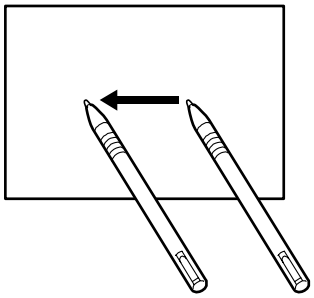

Caution: The stylus supplied with your VisionPlate is designed for your LCD screen. Using any other pointing device could damage your screen.

.2 Touchscreen Calibration

To calibrate the touchscreen, do the following:

1. Using the stylus, tap Settings, then tap Calibration, as shown in the following illustration. A + mark will appear on the screen.

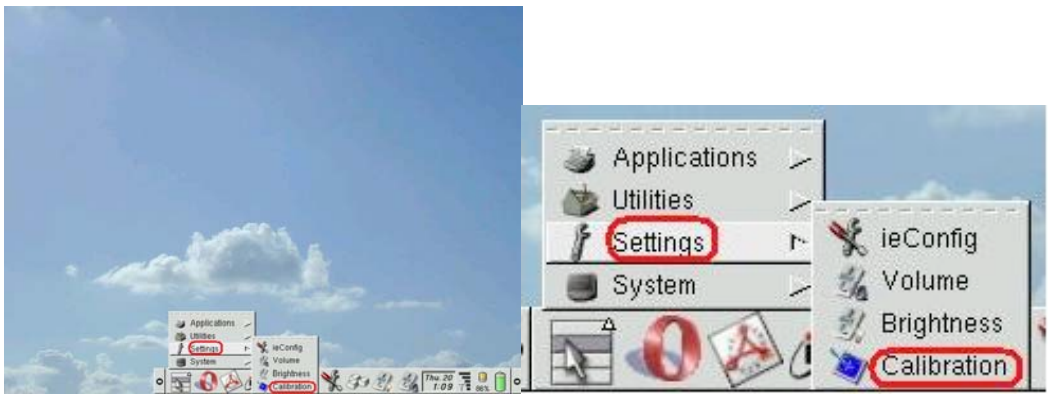

2. Tap the center of the + mark. Repeat this step one or more times after the + mark moves from the top left of the screen to the bottom right of the screen.

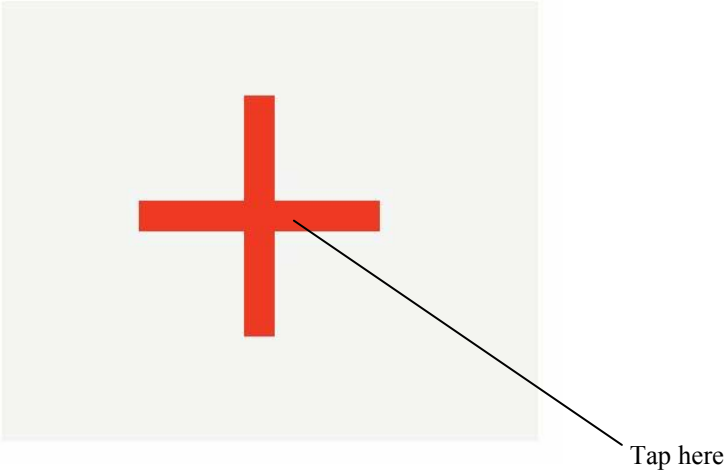

.3 Adjusting the Brightness of the LCD

To adjust the brightness of the LCD screen, do the following:

1. Using the stylus, tap Settings, then tap Brightness, as shown in the following illustration:

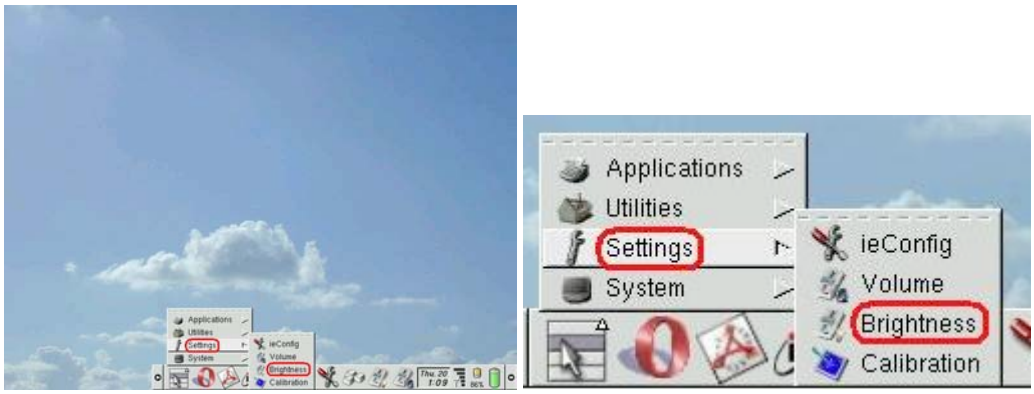

2. Move the slide bar to adjust the brightness.

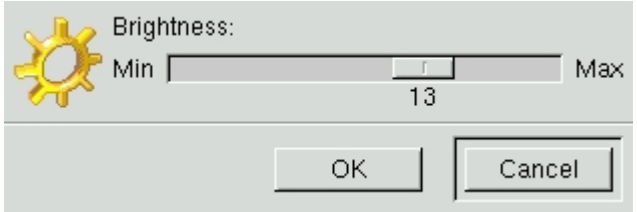

3. Tap OK.

.4 Adjusting the Volume

To adjust the volume of your VisionPlate, do the following:

1. Using the stylus, tap Settings, then tap Volume, as shown in the following illustration:

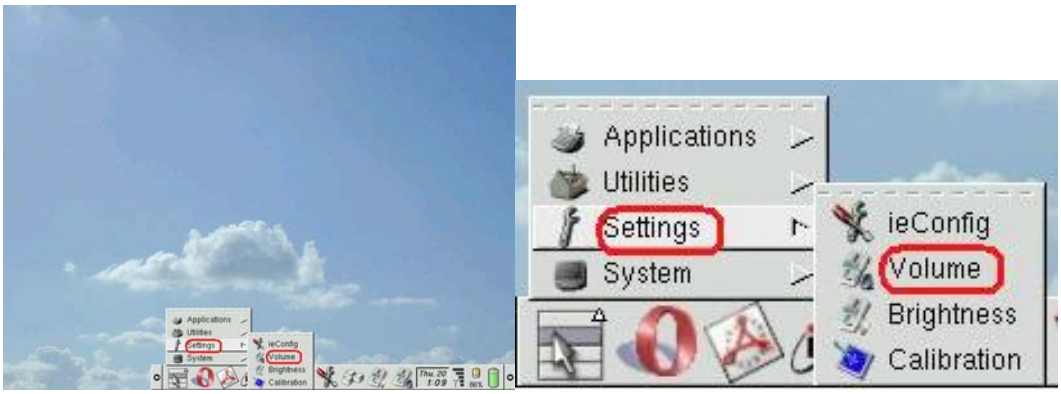

2. Move the slide bar to adjust the volume.

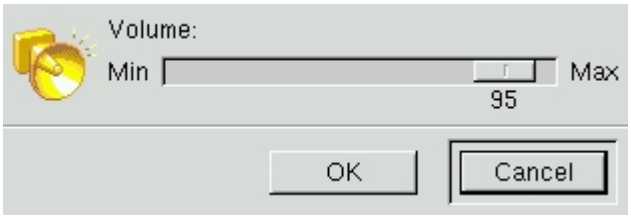

3. Tap OK.

.5 Battery Pack

This section describes how to use the battery pack.

Charging the Battery Pack

Your VisionPlate comes with a lithium ion battery pack, which is not fully charged. You must fully charge the battery before you use your VisionPlate. The battery is charged by attaching a battery pack to your VisionPlate, connecting the AC adapter to the VisionPlate, and then plugging the AC adapter into an electrical outlet.

The Charge Lamp

The charge lamp has four modes that describe different states of the battery. They are as follows:

- Orange: The battery is being charged.
- Green: The battery has finished charging and is fully charged.
- Off: The battery is in use, and there is sufficient charge.
- Blinking red: The battery is in use and is low.

Battery Charging Time

Battery charging times are as follows:

- S size battery (1700mAh): approximately 2.5 to 3.5 hours.
- L size battery (3400mAh): approximately 4.5 to 5.5 hours.

Note: Battery charging times vary with the environment, number and type of peripheral connections, and the age of the battery.

Important: Batteries that are fully discharged or that have not been used for a long period of time will require a longer time to charge.

Battery Life

Battery life is approximately 3 hours with the S size battery and 6 hours with L size battery.

Battery life varies with the environment in which the VisionPlate is used and stored, the peripheral connection state of the product, and the age of the battery. Battery life can be extended by turning off the VisionPlate, by putting the product in suspend mode when not in use, and by adjusting the screen to a lower brightness setting.

Under test conditions, the standard battery lasts approximately 2.5 hours when actively using 802.11g wireless connectivity and using an active application. The extended life battery will double the battery charge life. Using Suspend mode and turning off applications or wireless connections when not in use will result in a longer battery charge life between charges.

You can check remaining battery life by tapping the tool icon then tapping the POWER Supply tab.

Battery Maintenance

To properly maintain your batteries, keep the following guidelines in mind:

- The battery will discharge slowly if it is attached to the VisionPlate without an AC adapter for an extended period of time. A fully discharged battery will take a longer time to charge and can have reduced capacity.
- The battery will slowly lose its charge even when the VisionPlate is turned off. Check the remaining battery life by tapping the tool icon then tapping the POWER Supply tab. Recharge the battery if it is less than 15 percent. Charge the battery periodically (at least once per month) even if the unit is not being used during this time.
- The battery might have a shorter usable time when it is first charged, or after a long period of non-use. Charging and discharging the battery several times should recover full battery functionality.
- Store the battery in a cool dry place.
- Replace the battery when it no longer provides normal operating time.
- Allow your battery to discharge completely at least once a month in order to prolong the battery life.

General Precautions

- Do not short-circuit the plus (+) and minus (–) terminals of the battery.
- Never allow the battery to heat up to more than 60 degrees Celsius (140 degrees Fahrenheit).
- Do not drop the battery.
- Avoid any shock to the battery.
- Do not wipe the metal parts of the battery with a wet cloth.
- Do not soak the battery in water or touch it with wet hands.
- Never disassemble a battery.
- Do not expose the batteries to direct sunlight.
- Replace the battery only with the same type of battery or an equivalent type that is recommended by Hitachi Data Systems.
- Do not touch leaking batteries with bare hands. Wash your hands with running water if you touch battery fluid.
- Dispose of batteries in accordance with applicable local laws, ordinances, and regulations.

Entering the Power Saving Mode

The Power button and Time-out function can be used to prolong battery life.

Power Button

If the Power button is pressed and released after one second, your VisionPlate will enter one of three power modes.

Enter Low Power Mode: Your VisionPlate will enter Low Power Mode.

When in Low Power Mode, the green lamp will blink.

Power OFF: Your VisionPlate will shut down.

Prompt User for Confirmation: Your VisionPlate will display a pop-up menu, providing you with the option of entering Low Power Mode, Power OFF, or dismissing. This mode is the factory default setting.

The power mode can be changed by following these steps:

1. Using the stylus, tap the tool icon.
2. Tap the Power Supply tab, and then press Modify.
3. In the Power Button Mode Action, select one of the three modes.
4. Tap OK. If Backlight Power Off is not selected, Low Power Mode is disabled.

Time-out

The VisionPlate is set to enter Power saving mode after 20 minutes of non-use.

This time-out period can be changed by following these steps:

1. Tap the tool icon.
2. Tap the Power Supply tab, and then press Modify.
3. In the Power Saving Mode Action, select Backlight Power Off and define Timeout.
4. Tap OK. If Backlight Power Off is not selected, Low Power Mode is disabled.

Exiting Power Saving Mode

To exit Power saving mode, tap the screen.

If the Power button is programmed to Power Off, the system will shut down.

Low Battery Notification

Your VisionPlate will notify you when your battery level is low.

There are three user-selectable methods of notification, as follows:

Audible Warning: The VisionPlate will beep when the battery level is low, until the AC adapter is connected.

Popup Message: The VisionPlate will display a popup message notifying you of the low battery condition.

Power Off: No notification is provided. The VisionPlate will automatically shut down.

The notification method can be changed by doing the following:

1. Using the stylus, tap the tool icon.
2. Tap the Power Supply tab, and then tap Modify.
3. From the Low Battery menu, select one of the three notification methods.
4. Tap OK.

Chapter 4 Expandability

This section describes how to expand the capabilities of your VisionPlate.

.1 PC Cards

The VisionPlate supports one Type I or Type II PC card.

Installing a PC Card

To install a PC card, do the following:

1. Open the cover of the PC card slot.
2. Insert the PC card into the slot.

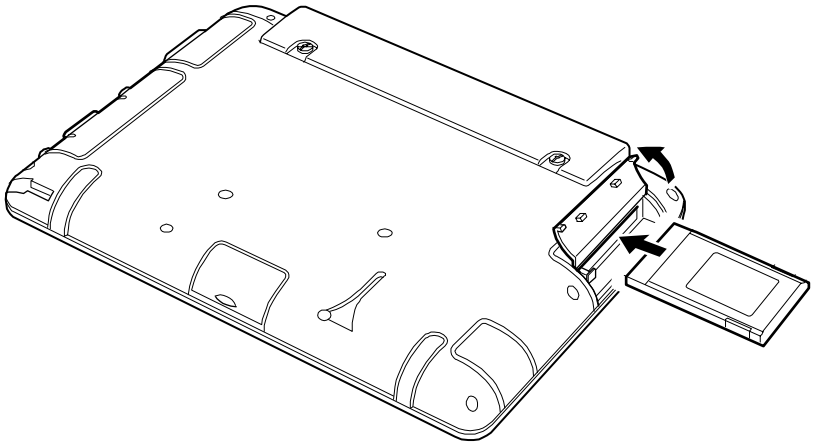

Removing a PC Card

You can remove a PC card only when the card is in Stop status.

To remove a PC card, do the following:

Caution: You can cause damage to the PC card if you remove the PC card while the VisionPlate is in use.

1. Using the stylus, tap Utilities, then tap Card Tool, as shown in the following illustration:

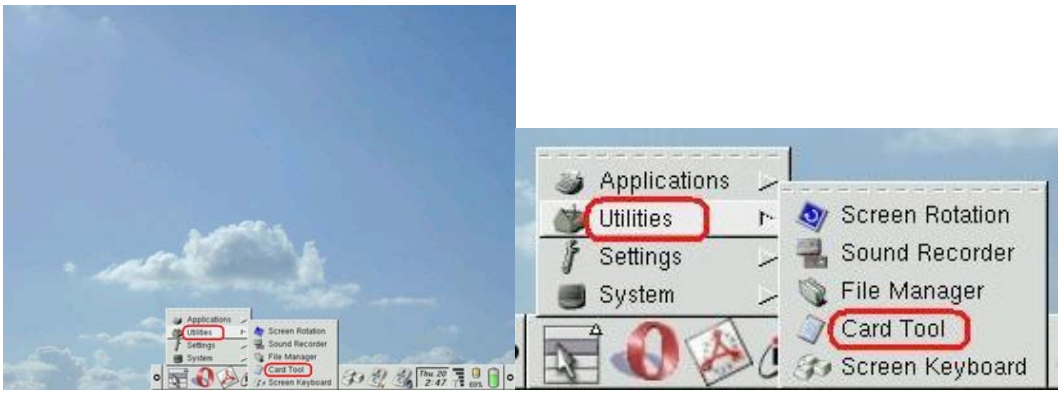

2. Tap the Stop button for the PC card

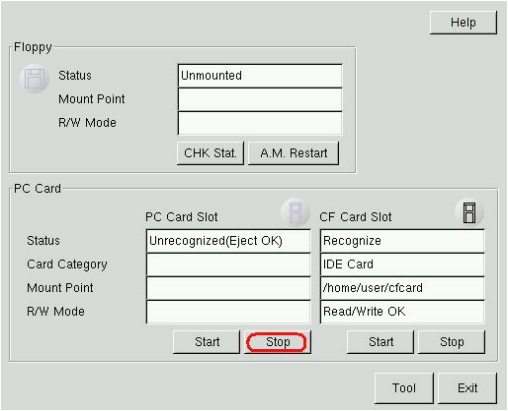

3. Tap OK.

4. Open the cover of the PC card slot.
5. Press the Eject button to remove the PC card, as shown in the following illustration:

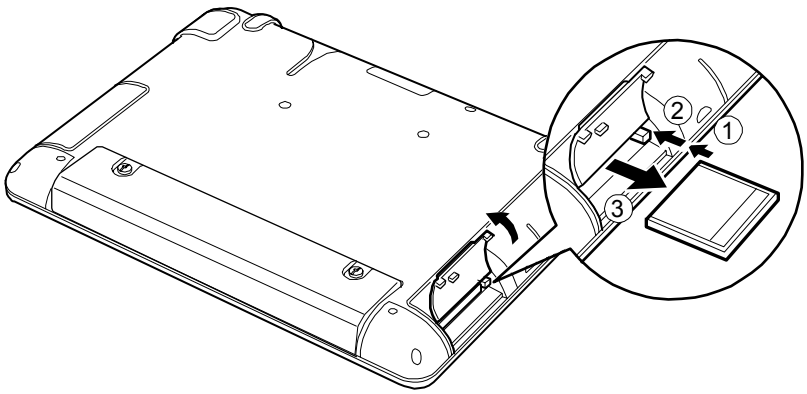

Note: If it is difficult to remove the PC card, press the PC card back in and then press the Eject button again.

.2 CF Cards

The VisionPlate supports one Type I or Type II CF card.

Installing a CF Card

To install a CF card, do the following:

1. Open the cover of the CF card slot.
2. Insert the CF card into the slot, as shown in the following illustration:

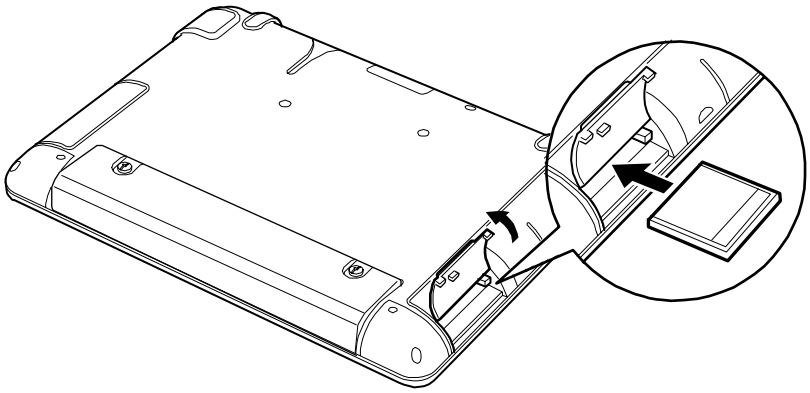

Removing a CF Card

You can remove a CF card only when the card is in a Stop status.

To remove a CF card, do the following:

Caution: You can cause damage to the CF card if you remove CF card while the VisionPlate is in use.

1. Using the stylus, tap Utilities, then tap Card Tool, as shown in the following illustration:

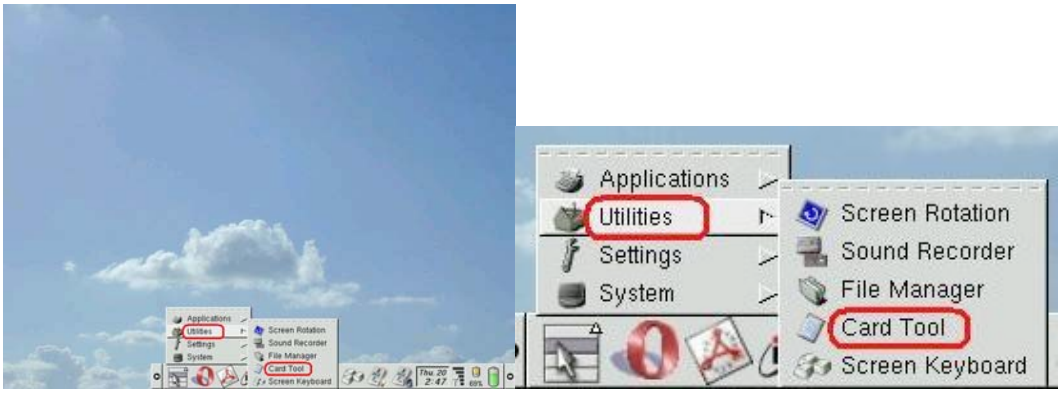

2. Tap the Stop button for the CF card.

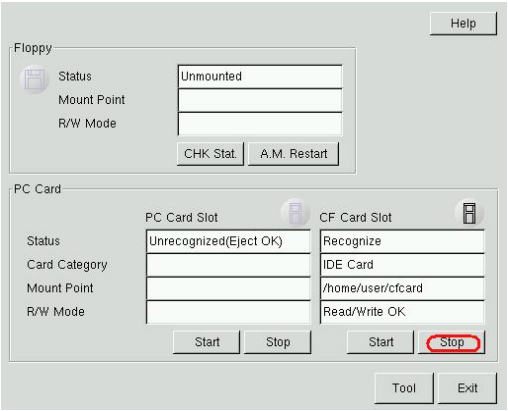

3. Tap OK.
4. Open the cover of the CF card slot.

5. Press the Eject button to remove the CF card, as shown in the following illustration:

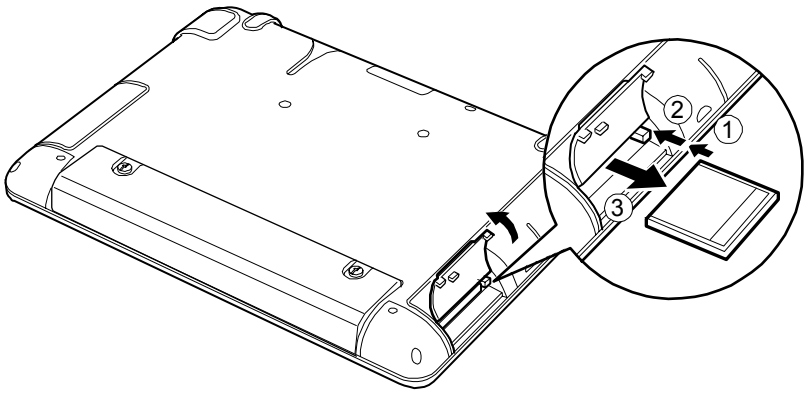

Attaching the Cradle to a VESA Compliant Flat Panel Mounting Stand

The Cradle can be attached to a Flat Panel Mounting Stand that is VESA compliant.

To attach the Cradle to a mounting stand, do the following:

1. Remove the base of Cradle by removing the two screws from the base, as shown in the following illustration:

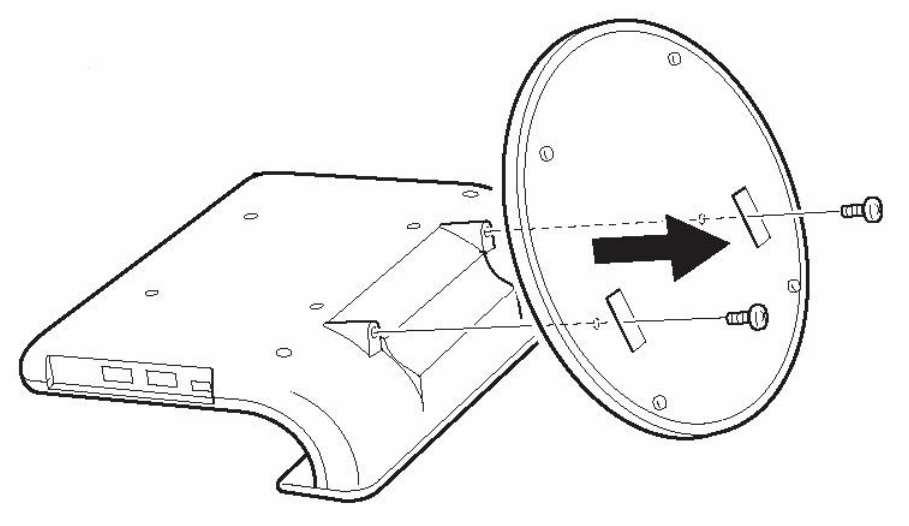

2. Fasten the top portion of the Cradle to the VESA compliant mounting stand as shown in the following illustration:

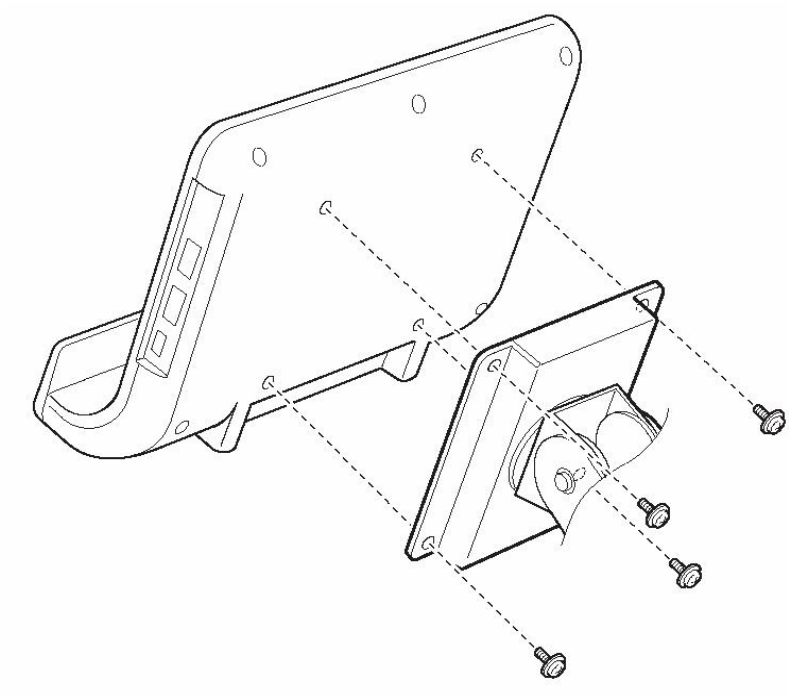

Chapter 5 VisionPlate Troubleshooting Tips

.1 Troubleshooting the Display

When troubleshooting the display, follow these guidelines.

If there is no display, do the following:

- Verify that the VisionPlate is not in Sleep mode. Touch the screen or press the Power button for one second.
- Ensure that the AC cord and the AC adapter are plugged in correctly.

If the system hangs, do the following:

- Shut down the VisionPlate by pressing the Power button for at least four seconds, then reconnect the AC adapter and battery pack, and then press the Power button again to restart the VisionPlate.

. 2 Troubleshooting the Stylus

If a gap exists between the cursor position and the tapped point, adjust the touchscreen calibration, as follows:

1. Using the stylus, tap Setting, then Calibration
2. Tap the center of each + mark that appears on the screen.

.3 Troubleshooting Power Connections

When troubleshooting power problems, follow these guidelines.

If the system does not boot up after pressing the Power button, do the following:

- Verify that the AC adapter and power cable are plugged in correctly.
- Ensure that there is power from the outlet.
- Check the battery connection.
- Check for short battery life.

Note: Repeat charging and discharging several times. If you still have the same results, the battery could be at the end of its life.

Specifications

CPU			Transmeta Crusoe™ Processor TM5500 667MHz
Cache Memory	Primary		128kB CPU Embedded
	Secondary		256kB CPU Embedded
Main Memory	Capacity		Standard 128MB, Max 256MB
Display	LCD		Transmissive 10.4" TFT, 800x600 (SVGA), or 1024x768 (XGA), 262144 color, Indoor viewable
	VRAM		2MB (SVGA), 4MB (XGA)
	Video Controller		SMI SM712
Touch Panel			Analog resistive type
File	CF		128 MB/512MB
Clock			Lithium battery backup (Five year life) Tolerance +/- 180s/month
Microphone			Mono
Speaker			Mono
Interface	Headphone		1 port
	Microphone		1 port
	USB1.0		2 ports (Total maximum permissible current: 0.75A)
	Wireless LAN		IEEE 802.11g compliant
Expansion Interface			1 port for Cradle
PC Card Slot			1 Slot for Type I, II (PCMCIA 2.1)
CF Card Slot			1 Slot for Type I, II CFA compliant
Battery	S size	Battery Pack	Lithium ion battery 11.1V 1700mAh
		Charge Time	Approximately 2.5 to 3.5 hours
		Battery Life *1	Up to 3.7 hours
	L size	Battery Pack	Lithium ion battery 11.1V 3400mAh
		Charge Time	Approximately 4.5 to 5.5 hours
		Battery Life *1	Up to 7.5 hours
AC Adapter	Frequency		50/60Hz
	Input Voltage		AC100V-240V
Consumption	Maximum		45W
	OS Idle		Approximately 11W
	Stand-by		Approximately 4W
Weight			2.84lb(1.35kg) with S size Battery
Dimensions			11.6"(W) x 8.8"(H) x 1.3"(D) (294mm x 223mm x 34mm)
Ambient Temperature	Operating		5 to 35°C (41 to 95°F)
	Non-Operating		-10 to 50°C (14 to 122 °F)
	In transit/stock		-10 to 60°C (14 to 140 °F)
Ambient Humidity	Operating		20 to 80% (No Condensation)
	Non-Operating		10 to 80% (No Condensation)
	In transit/stock		10 to 80% (No Condensation)
Vibration Resistance	Operating		4.9 m/s^2 (0.5 G)
Shock Resistance	Operating		98 m/s^2 (10 G)

*1 When the operating system is idle with the lowest intensity of LCD.

VisionPlate User Manual

September 2003
Hitachi Data Systems
Internet Platform Business Unit
750 Central Expressway
Santa Clara, CA 95050

V1.18