InfoProx™ Entry

Installation and Operation Manual

tyco

Fire & Security

Software House

InfoProx™ is a trademark of Software House.

Microsoft® and Windows® are registered trademarks of Microsoft Corporation.

This product is manufactured under license from HID Corporation, Irvine, California and embodies one or more of the inventions disclosed and claimed in U.S. Patents, Number 4,546,241, 4,730,188, 5,041,826 and/or 5,166,676.

ProxKey™ and ProxCard™are trademarks, and ISOProx® and ProxCard II ® are registered trademarks of HID Corporation

Document Part Number: #8000-1411-00

Revision: B0

Release Date: February 2002

This manual is proprietary information of Software House.
Unauthorized reproduction of any portion of this manual is prohibited. The material in this manual is for informational purposes only. It is subject to change without notice.
Software House assumes no responsibility for incorrect information this manual may contain.

© 2002

Software House
70 Westview Street
Lexington, MA 02421-3108

All rights reserved.

TABLE OF CONTENTS

INFOPROX™ ENTRY **1**

INSTALLATION AND OPERATION MANUAL **1**

1. IMPORTANT SAFETY INFORMATION **1**

POWER SOURCES 1
ANSI/UL LISTING (USA) AND CSA 22.2 LISTING (CANADA) 1
UL 294-COMPLIANT INSTALLATION 1
FCC CLASS A DIGITAL DEVICE 2
CANADIAN RADIO EMISSIONS REQUIREMENTS 2

2. INTRODUCTION **2**

DESCRIPTION 3
OPTIONAL SOFTWARE 4
DOOR CONTROL UNIT ADMINISTRATION 4

3. GETTING STARTED **6**

READER TYPES 7
PREPARING TO INSTALL INFOPROX 7

4. INFOPROX HARDWARE INSTALLATION **14**

POWER CONNECTIONS 15
EXIT READER CONNECTIONS 16
READER INPUTS AND OUTPUTS 17
INFOPROX ENTRY WIRING: RJ45 CONNECTIONS 20
INSTALLATION CHECKLIST 22

5. CONFIGURING THE DOOR CONTROL UNIT **23**

FIRST TIME ACCESS TO THE ADMINISTRATION MENU 23
Accessing the Administration menu *23*
Accessing the Administration menu for the first time *24*
ACCESSING THE ADMINISTRATION MENU AFTER PASSWORD SETUP 25
Accessing the Administration menu after password setup *25*
GETTING TO KNOW THE CONFIGURATION SETUP 26
CONFIGURING THE READER 28
Accessing the configuration setup *28*
CONFIGURE CURRENT TIME 29
Configuring the current time and date *29*
CONFIGURE TIME ZONE 30
Configuring the time zone *30*
TIME ZONE TYPES 32
Configuring time zone types *32*
Configuring Normal time zone mode *33*
Configuring PIN time zone mode *33*
Configuring Free time zone mode *34*
Configuring Card-only time zone mode *34*
CONFIGURE INPUTS 35
DOORSTRIKE TIME 35
Modifying the door strike time *35*
DOOR CLOSE AFTER TIME 36

Modifying the door close after time option *36*
GIN CONFIGURATION 37
Modifying the default GIN number *37*
SITE CODE 38
Entering a site code *38*
DOOR CONTROL UNIT DIAGNOSTIC SCREEN SET UP 39
Accessing the diagnostic screen setup *39*
CONTRAST 40
To alter the contrast *40*
DOOR MODE 40
To configure the door mode *40*
KEYPAD ENABLE / DISABLE 41
To enable/disable keypad *41*
EXIT CONFIGURATION 42
To setup the exit configuration *42*
RELAY IDLE STATE 43
To set the relays *43*

6. CARD MANAGEMENT 44

ADDING CARDS (OPTION 1 - ADD) 44
How to add a card by swiping (Option 0) *44*
Add a card by swiping *45*
Add a card from the keypad *47*
DELETE A CARD (OPTION 0 – DEL) 49
To delete a card *49*
CARD SEARCH (OPTION 2 - FIND) 50
To find a card by hotstamp number (option 0) *50*
To find a card by swipe (option 1) *51*
To search for all card records from the lowest number *52*
To search for all card records from the highest number *53*
DIAGNOSTIC TESTS 53
To run a diagnostic test *53*
CHANGE PASSWORD 54
To change the password *54*
PC BACKUP 55
To access the software utility backup *55*

7. DIAGNOSTIC ROUTINE 56

INITIATING THE DIAGNOSTIC ROUTINE 56
To run the diagnostic routine *56*
DISPLAYING DIAGNOSTIC SCREENS 57
To display diagnostic screens *57*
FINAL DIAGNOSTIC CHECKLIST 59

8. INFOPROX TECHNICAL DESCRIPTION 60

EXIT READERS 61
INPUTS AND OUTPUTS 61
THE READ-HEAD 61
CARD TECHNOLOGY 62
THE KEYPAD 62
THE LEDS 62
THE LCD PANEL 63

LCD CONTRAST CONTROL 63
BATTERIES 63
INFOPROX ENTRY PCB 64
EXIT READER CONNECTIONS 65
READER TYPES 66
TECHNICAL SUPPORT 67

9. GLOSSARY 69

1. Important Safety Information

The safety guidelines for InfoProx Entry include:

- Power sources
- ANSI/UL listing (USA) and CSA 22.2 listing (Canada)
- UL 294-compliant installations
- FCC Class A digital device
- Canadian Radio Emissions Requirements

Power Sources

To power the door latch, you should use a power limited UL 294 or UL 603 door strike power supply. You can obtain the door strike power supply from AlarmSAF, Altronix, Securitron, and Software House. You can also use the door strike power supply to provide power to the reader units. The typical load on the power supply is 250 milliamps per reader. You can also power the readers by using the DIU supplied by Software House, or a Desktop Power Supply rated 12 VDC, 1.2 Amp minimum, with Class 2 and UL Markings. If you do not have a battery backup for the power supply, you cannot connect the power supply to a receptacle that is controlled by a switch.

ANSI/UL listing (USA) and CSA 22.2 listing (Canada)

A National Recognized Test Laboratory (NRTL) has examined and tested InfoProx Entry, EtherProx Entry, and InfoProx Exit readers according to the requirements of ANSI/UL 294 - Access Control System Units and CSA 22.2 No. 205-M1983. The readers are low-voltage 12-volt assemblies that operate from power limited sources. When you install a reader according to the instructions in this manual and wire it according to the National Electrical Code (NEC), you can expect the reader to meet all safety requirements.

UL 294-compliant Installation

To ensure a secure installation that is in full compliance with UL 294 requirements for security and performance, follow these guidelines:

- You must install the wiring for the door controls on the secured side of the premises.
- If you provide backup power with the installation, the batteries in the 12-volt UL 294 or UL 603 power supply should provide power for the door strike and the readers for a minimum of four hours. If you do not provide backup power with the installation, make a permanent marking on the power supply label of the expected duration of the fully charged battery. The Software House DIU also provides battery power.

- According to UL 294 requirements, if you attempt to force open a door at an entrance that is controlled by an InfoProx reader, or tamper with the reader, an audible alarm will activate. A sound alarm device must have a sound level of at least 85 decibels. An alarm must activate for 15 minutes. You can purchase a Battery Back Up Supervisory Siren sounder, Model 0821 from Street Smart Security. There are three ways to meet the UL 294 alarm requirements:
    - Use a Software House DIU. The DIU closes a set of relay contacts when an intrusion or tamper is detected by the InfoProx Reader. The relay contacts activate the alarm.
    - Reverse the Entry and Exit readers so that the door controls are on the secure side of the door. Use the relay output of the Exit reader to activate a supervised sound device.
    - Use a standard UL burglar alarm system to monitor the door and the tamper activity at the InfoProx reader.

FCC Class A Digital Device

InfoProx readers have been tested and found to comply with the limits for a Class A digital device, pursuant to Part 15 of the FCC Rules. These limits are designed to provide reasonable protection against harmful interference when the device is operated in a commercial environment. This equipment generates, uses, and can radiate radio frequency energy and, if not installed and used in accordance with the instruction manual, may cause harmful interference to radio communications. Operation of this equipment in a residential area is likely to cause harmful interference in which case the user will be required to correct the interference at his own expense. The FCC ID is ACD/SPASSSERIES.

Canadian Radio Emissions Requirements

This digital apparatus does not exceed the Class A limits for radio noise emissions from digital apparatus set out in the Radio Interference Regulations of the Canadian Department of Communications.

Le present appareil numerique n’emet pas de bruits radioelectriques depassant les limites applicables aux appareils numeriques de la class A prescrites dans le Reglement sur le brouillage radiolelectrique edicte par le ministere des Communications du Canada.

2. Introduction

The Software House InfoProx Entry Reader is a compact door control unit that provides a sophisticated, cost effective solution for single-door access monitoring and control. InfoProx Entry combines a proximity card reader and keypad with status indicators in a self-contained door control unit that is compact and discreet. The unit is housed in a weatherproof polycarbonate enclosure with a two-line LCD display screen and three LED indicators. Access to a secured area can be controlled in several ways: card swipe only,

card swipe plus personal identification number (PIN), or PIN only. Also, control may be implemented for entry-only or entry and exit access.

InfoProx Entry is ideal for controlling a single door, usually in a remote area. It can be used for businesses, leisure facilities, members-only clubs and secure areas in public buildings.

InfoProx Entry maintains a database of valid cards. Cards are added by accessing the Administration menu at the keypad. The Administration menu allows you to configure an InfoProx Entry. You can configure door open time, site-code, and other features.

InfoProx Entry Software Utility, an optional Microsoft Windows-based software application, is available for use with the InfoProx Entry unit. The user database and configuration data can be downloaded to a PC workstation used for backup purposes. This data can then be uploaded to the unit's database in the event of data loss on the InfoProx Entry unit.

Another feature of InfoProx Entry is the ability to interpret the configuration and database files uploaded from the unit, and produce a report in the event the database and the backup are both lost. This report can also be used to compile lists of cardholders stored in the InfoProx Entry database.

The InfoProx Entry is one of Software House's suite of integrated products and services.

Description

InfoProx Entry is housed in a fully encapsulated polycarbonate electronics enclosure that is both weather and vandal resistant. InfoProx Entry is designed to mount on a standard electrical containment box. The keypad is required for PIN validation, access to the Administration menu, and data entry. InfoProx Entry supports HID 26-bit, HID 32-bit, and HID (Software House) 37-bit Wiegand proximity technology, which are licensed from HID Corporation. The following are cards and read ranges that are supported:

- ISOProx® II Card 9cm (3.6")
- ProxCard™ Plus Card 6cm (2.4")
- ProxCard® II Card 10cm (4")
- ProxKey™ II Fob 4cm (1.6")

An optional exit reader can be connected to the door control unit to create an entry/exit reader configuration for IN/OUT control. Alternatively, a push button can be connected as an input to the reader to provide egress from a controlled area where no exit reader is provided.

The door control unit has four analog inputs and a set of dry relay contacts. The analog inputs are intended for use with external sensors to monitor door position, lock status, and a request-to-exit push button. The relay contacts are intended to control a door strike or lock.

Initially, the administrator inputs the card ID numbers into the reader's database. When a card is read, access is granted if the card ID matches an ID in the reader's database. Card IDs not in the database are denied access.

Personal Identification Numbers (PINs) can be assigned to some or all cards to increase security. Before access can be granted, a valid PIN must be entered after a valid card is read.

The door control unit can be configured to allow access on entering a specific Global Identification Number (GIN) during certain times of the day, without the need for a card to be presented.

Card, configuration, transaction and alarm information is held in the InfoProx Entry memory. Recording of alarms and card transactions are also stored for future upload to a workstation.

Optional Software

The optional InfoProx Entry software utility can be installed on an IBM compatible PC, running Microsoft Windows 95, 98, 2000, Me or NT 4.0 operating systems. This application is used to add or remove card records, configure communications, upload and backup data, and produce reports.

Communication between the door control unit and the software application is established through an RS232/485 converter plugged into a serial port on the back of a PC. A normal Cat 5 patch cable connects the converter to a female RJ45 connector, providing cable connection to the InfoProx Entry, as shown in the following diagram:

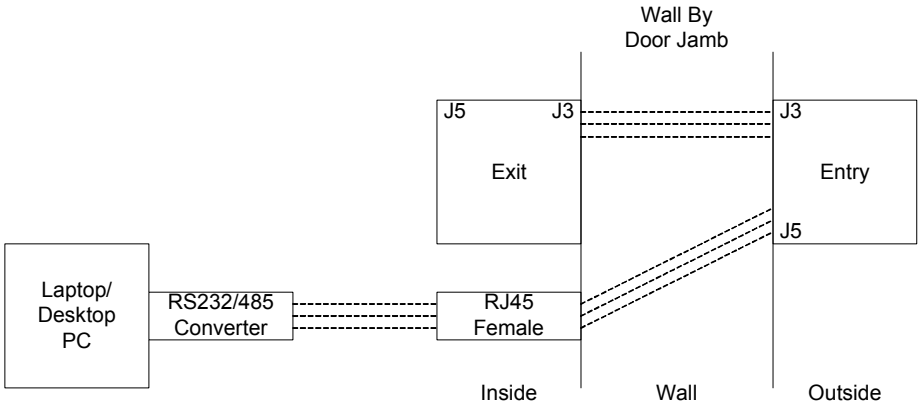

Figure 1: PC and Exit Reader Connections

When the PC software is running, a backup copy of the reader database can be uploaded from the computer to the reader unit. This data can be used to provide a backup copy should the reader database need to be regenerated; used to generate reports of card details or to configure other InfoProx Entry units by uploading a data file.

Door Control Unit Administration

The menu on the InfoProx Entry (the door control unit) is used to configure its operational settings and to maintain the card database. To preserve security, access to the menu is password protected. An authorized administrator can use the menu to carry out a variety of functions, which includes:

- Adding cards to the InfoProx Entry on board database
- Removing cards from the database
- Searching for and displaying card information
- Configuring time zones and operational parameters, such as door strike time
- Running diagnostic checks to test the unit
- Changing passwords
- Facilitating backup of the unit's database

3. Getting Started

The following list displays the order of tasks you must complete for proper installation and configuration of the Door Control Unit.

1. Before installing the hardware, make sure you have the proper tools and materials, as listed:
   - Electrical containment box
   - Nominal 12 Volt power source
   - Containment box adapter plate, used for US installations (provided)
   - 2-pair (Belden 8723) cable for power and data with 4-pin socket
   - 5-pair cable for inputs and output with 10-pin socket
   - 2-pair (Belden 8723) cable with 4-pin socket for connection to exit reader
   - If software used, 1 RS485 cable with an RJ45 connector and RS232/485 converter
   - Pin-hex security screwdriver for secure mounting screws
   - Slot screwdriver
2. Review terms in the Glossary that are not familiar.
3. Read section 3,"InfoProx Hardware Installation," before you install the hardware.
4. Familiarize yourself with the unit and the terms as explained in section 4 before configuring the unit.
5. Configure the unit, as described in section 4, "Configuring the Door Control Unit." You can accept the defaults for some of these features and can return to configuration later to add time zones or to customize the unit.

   However, you **must** configure the time and decide whether they will enter a site code for the cards that they will add. The site code is an embedded three-digit code issued by the manufacturer with a batch of cards.
6. Setup the unit based on your needs, as described in section 3, "InfoProx Hardware Installation."
7. Complete a Diagnostic Routine to test the unit.
8. Add assigned cards or PINs to the unit so that personnel may gain access based on your access control criteria.
9. Test access and all attached devices.

Reader Types

Software House manufactures three versions of readers: EtherProx Entry, InfoProx Entry, and InfoProx Exit. The EtherProx Entry is a door control unit that is controlled through web-based software. The InfoProx is a standalone door control unit that contains memory and data; the InfoProx Exit works with the InfoProx Entry or the EtherProx Entry.

Since all the readers look alike, it is important to understand the SPASS identification codes that appear on the back of the units in order to identify the readers and to verify that you have the correct type of reader for your installation. On the back of each unit, the SPASS code appears, as follows:

- IPE: InfoProx Entry
- IPX: InfoProx Exit
- EPE: *Ether*Prox Entry

Note The InfoProx Entry can be used only as an Entry Reader; an Entry Reader cannot be used as an exit reader.

Preparing to Install InfoProx

There are several ways to install an InfoProx reader. You can use an optional Door Interface Unit (DIU) or reverse the Entry and Exit readers in order to comply with UL 294. A DIU is an option that provides power for the readers and additional inputs, outputs, and alarms. You can wire the door controls to the DIU, making the installation UL 294-compliant.

If you install readers for only inside access control and not for outside access control, your installation does not have to comply UL 294 requirements.

! When you install the Entry reader on the secure side of the door, the wiring is not accessible during an attempted break-in. With this type of installation, the Transaction report will show an entrance as Access granted - Exit and an exit as Access granted – Entry.

The following table contains the secure and traffic control installation configurations for entry hardware, exit hardware, DIU, door control wiring, and sounder wiring.

INSTALLATION	ENTRY HARDWARE	EXIT HARDWARE	DIU	DOOR CONTROL WIRING	SOUNDER WIRING
Traffic control (see Figure 2)	Entry reader	REX switch	No	Entry reader	Not applicable
Traffic control (see Figure 3)	Entry reader	Exit reader	No	Entry reader	Not applicable
Secure (see Figure 4)	Exit reader	Entry reader	No	Entry reader	Exit reader
Secure (see Figure 5)	Entry reader	REX switch	Yes	DIU	DIU
Secure (see Figure 6)	Entry reader	Exit reader	Yes	DIU	DIU

The following diagrams contain the secure and traffic control installation configurations for entry hardware, exit hardware, DIU, and door control wiring. The diagrams illustrate how to configure the hardware. For details on connector pins and power wiring, see section 4, “InfoProx Hardware Installation.” For details on the DIU, see the DIU Installation and Operation Manual.

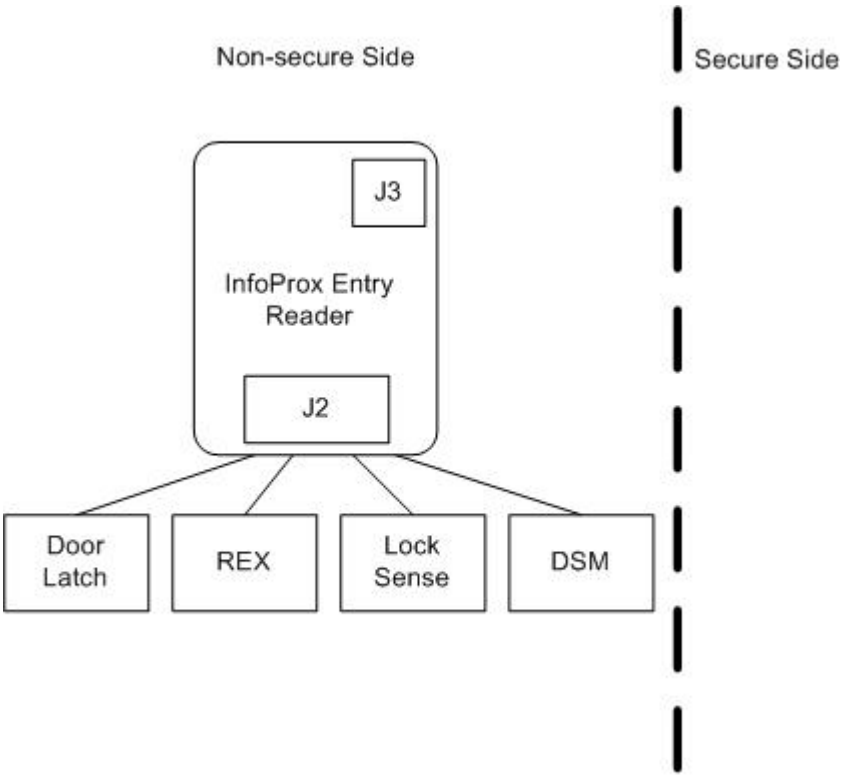

Figure 2: Traffic control with Entry reader and REX switch

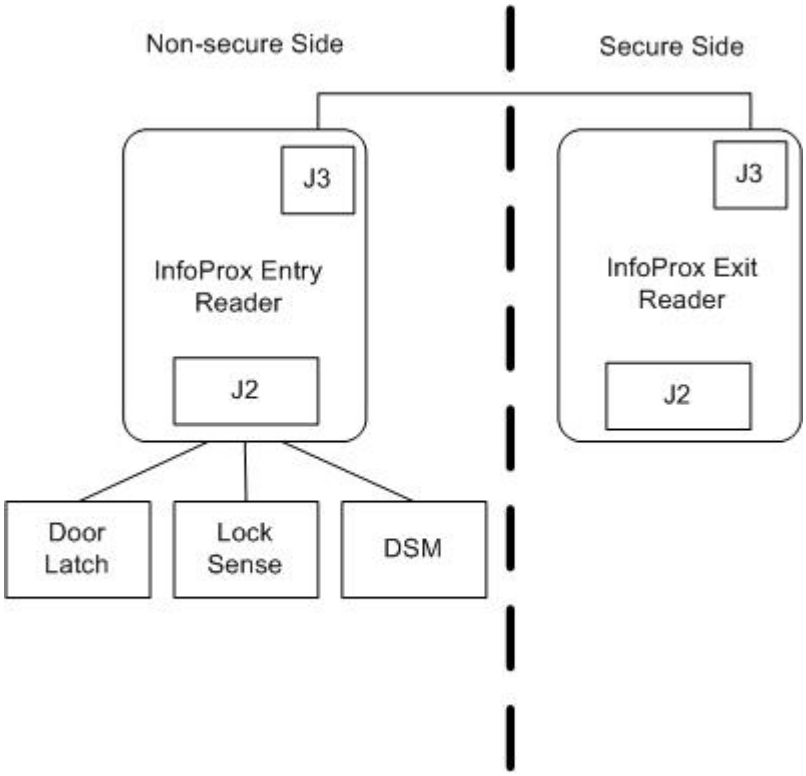

Figure 3: Traffic control with Entry reader and Exit reader

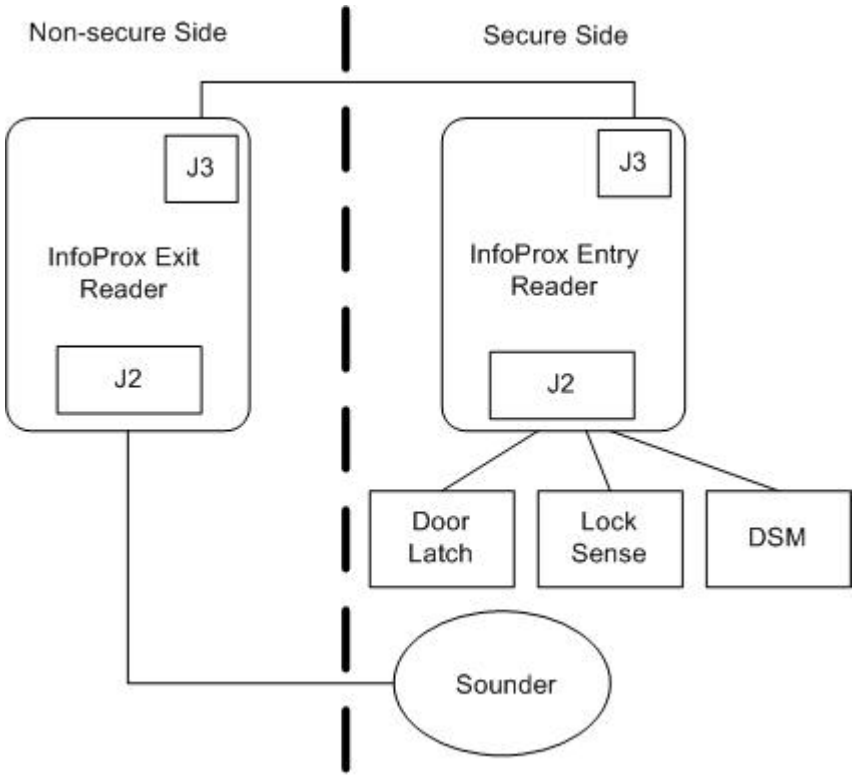

Figure 4: Secure with Exit reader and Entry reader

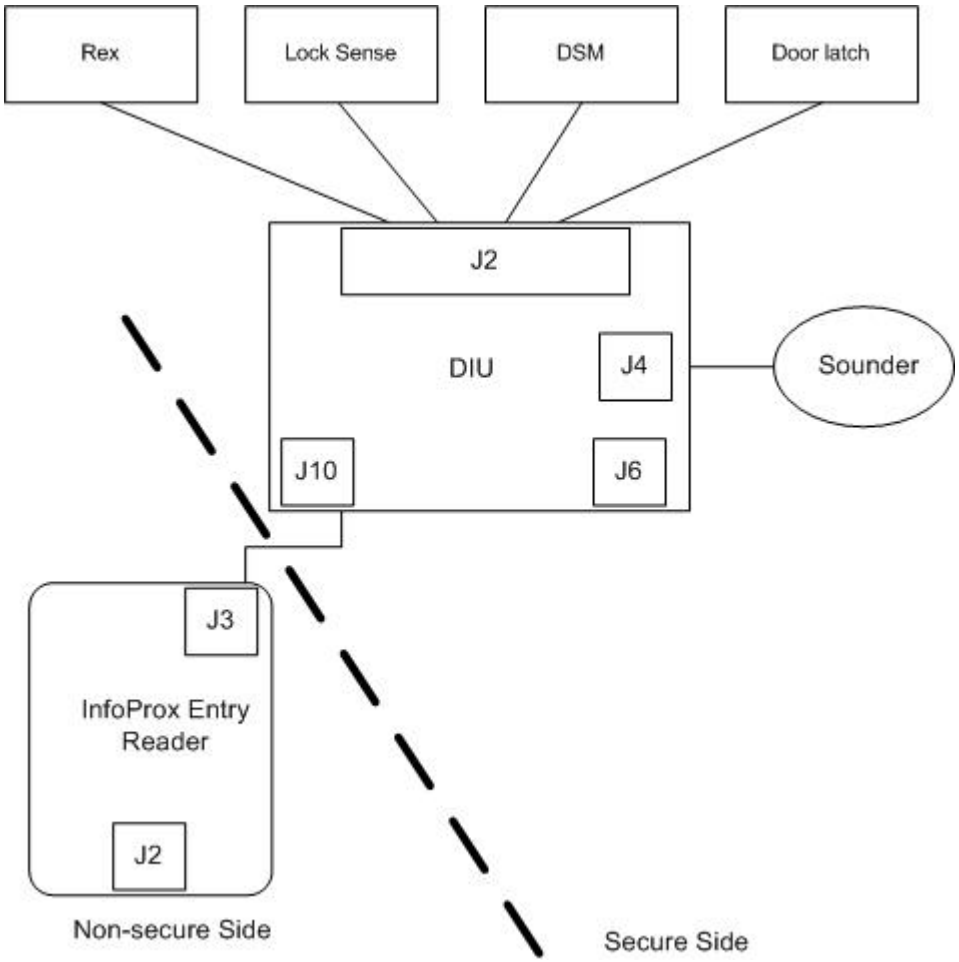

Figure 5: Secure with Entry reader, DIU, and REX switch

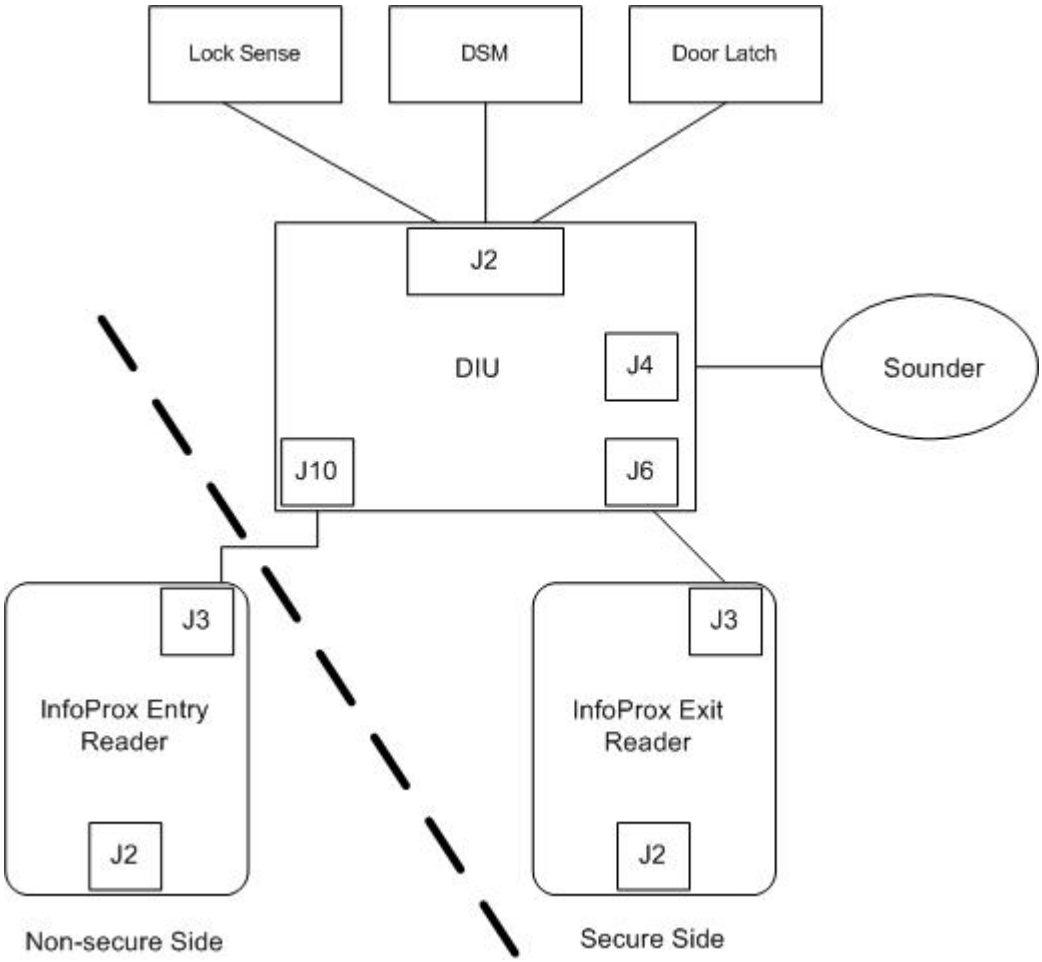

Figure 6: Secure with Entry reader, DIU, and Exit reader

4. InfoProx Hardware Installation

The enclosure is designed to mount directly onto a standard UK or European (French) electrical containment box (USA installations require an adapter plate), and standard conduit and fittings can be used. A clear polycarbonate screen covers the LCD for protection.

Cables are pulled through the conduit and terminated in the containment box. The following cables are required:

Cable	Connector
2-pair (Belden 8723) cable for power and data	4-pin socket (J3)
5-pair (max) cable for inputs and output	10-pin socket (J2)
2-pair (Belden 8723) cable to exit reader	4-pin socket (J3)
1 RS485 cable for female RJ45 connector	4-pin socket (J5)

The various cables use Phoenix Contact connectors for the unit's **inputs** and **outputs**. The cables are secured into screw terminals. A flat blade screwdriver of 1/8" or less is recommended.

The Phoenix Contact terminals used for the power and communication connections can accommodate two leads fitted into one terminal.

Two stainless steel tamper-resistant mounting screws are supplied and are concealed behind specially molded covers when installation is complete.

Power Connections

Power is supplied to the board by a J3 connector. In Figure 2, the diagram identifies the location of the terminal and power connections:

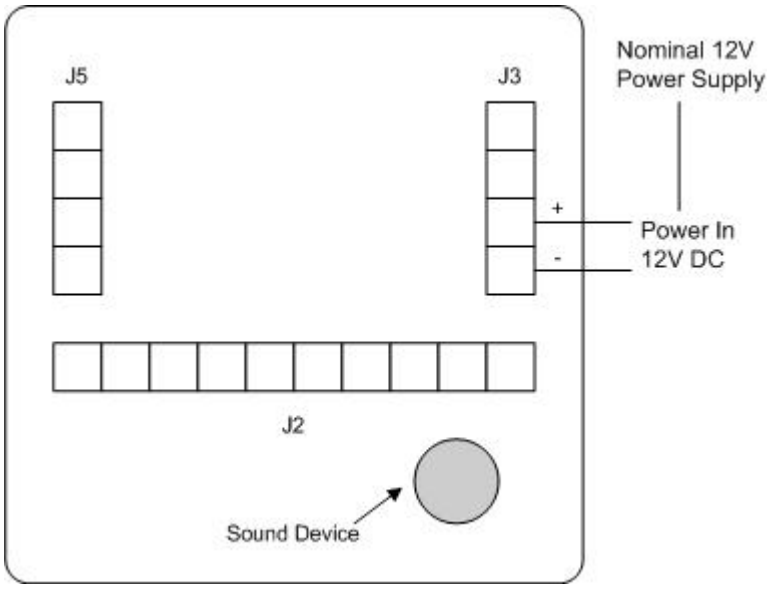

Figure 2:Terminal and Power Connections

The total cable length between the power supply and the reader depends upon the cable used and whether or not an exit reader is connected. See the following instructions regarding voltage:

1. For long cable runs, use Table 1, Voltage Table, to figure the voltage drop of the cable between the power supply and the reader.

2. Subtract the result from the power supply's output voltage.

3. If the result is greater than 7.0 volts, the wiring is adequate. If not, use heavier (lower gauge) wire or a power supply with a higher voltage output.

Example:	If you use a 22AWG wire with a 12-volt power supply 300 feet away from the readers, the voltage drops to 7.2 volts at the reader. Using Table 1, Voltage Table to calculate the voltage, multiply 3 (300 ft) times the 1.6V drop = -4.8 drop for the 300 ft. span. Subtracting 4.8 from the 12V supply = 7.2. A voltage of 7.2 at the readers is sufficient power to operate the readers above the 7V minimum required. In this example, the total distance from the power source and the exit cannot be more than 300 ft.

Note The reader requires a supply of 5V regulated for 180mA from 7 – 15V DC in. Power supply inputs are filtered, Transzorb and reverse voltage protected (250mA max).

The following table displays the voltage drops per 100 feet and 100 meters.

Exit Reader	Wire Size	Voltage Drop/100 ft.	Voltage Drop/100 M
Y	18 AWG	0.64V	1.95V
Y	22 AWG	1.6V	4.9V
N	18 AWG	.38V	1.17V
N	22 AWG	0.96V	2.9V

Table 1: Voltage Table

Exit Reader Connections

The exit reader is connected to the entry reader through a two-pair cable, providing power and communications. The connection is from connector **J3** on the entry reader (as shown in Figure 3) to connector **J3** on the exit reader, and is connected at both ends with a four-pin Phoenix Contact socket.

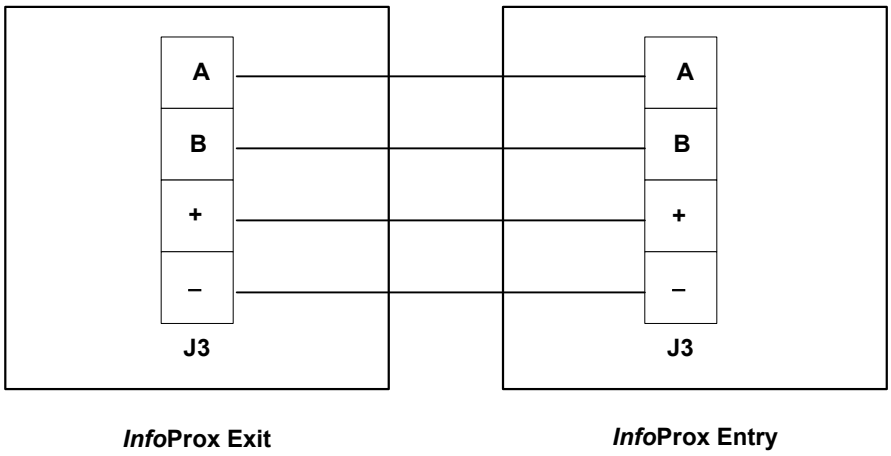

Figure 3: Exit Reader Connections

The recommended interconnecting cable is Belden 8723 or equivalent. It is not necessary to connect the drain wires in the cable. You can cut the drain wires off flush with the jacket.

Following is a diagram showing the InfoProx connected to both an exit reader and a PC.

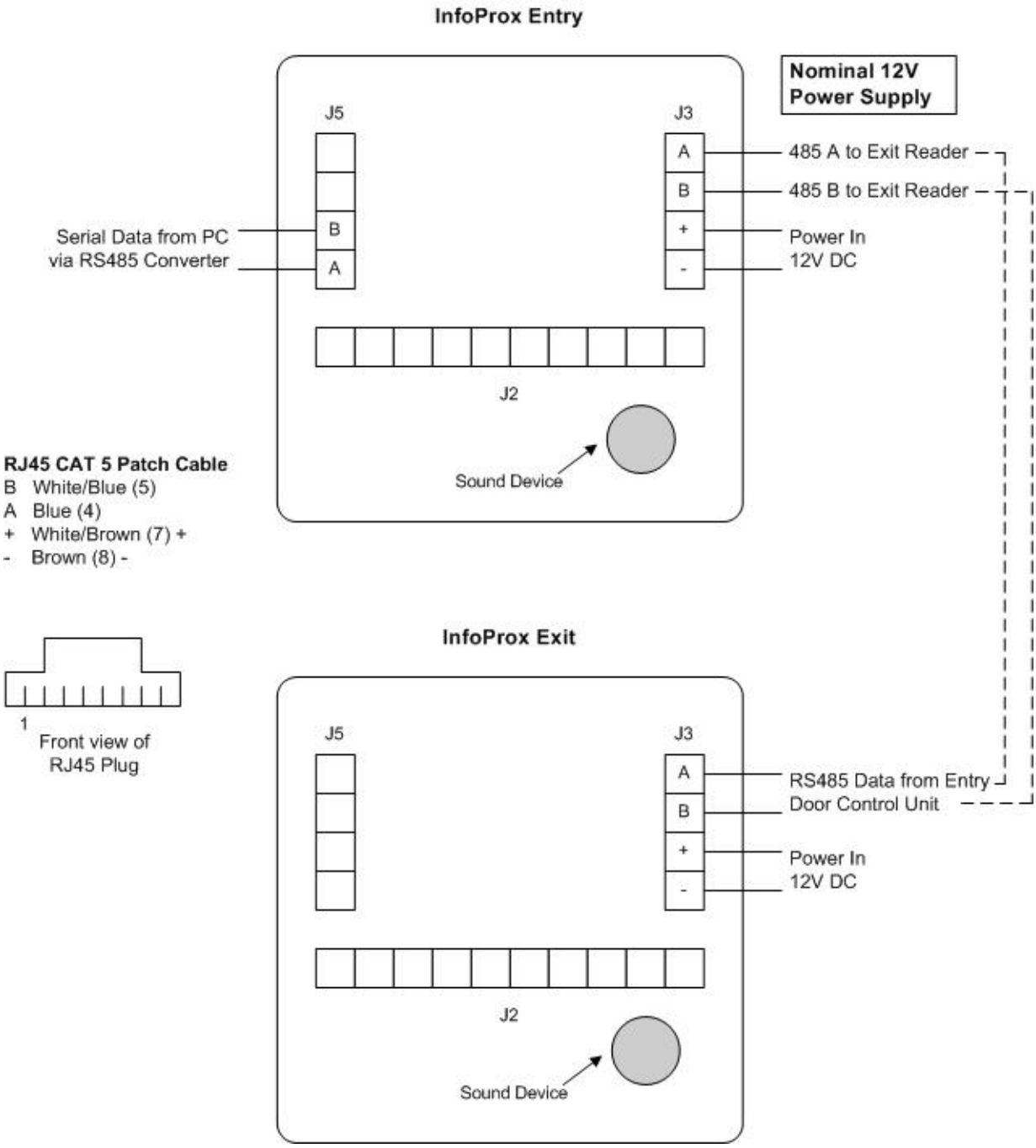

Figure 4: InfoProx connected to exit reader and PC

Note	In some cases, a blue wire will be blue/white and a brown wire will be brown/white.

Reader Inputs and Outputs

The reader has four analog inputs. For standard door mode, the following applies:

- Input 0 monitors door position (NC)
- Input 1 monitors lock status (NC)

- Input 2 is for request to exit (NO)
- Input 3 is spare. (NC)

The InfoProx Entry door control unit has a single-pole relay with a set of dry contacts rated at 5 amps at 30 volts DC maximum. The common and normally opened connections are available on pins 9/10 of J2. For normal door mode, this relay is reserved for door strike control (the relay operates when a valid card is presented). The four inputs and the relay output are located in a 10-pin Phoenix contact connector **J2**, as shown below. The relay can be configured as “Powered to Unlock” or “Powered to Secure”.

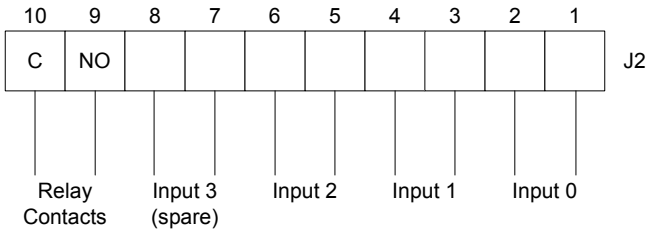

Figure 5: Inputs and Outputs on J2

The power supply must have sufficient capacity to operate the door strike, as indicated in Table 1. Three optional switches can be connected.

- The door state monitor is a normally closed switch (Input 0) whose contacts are closed when the door is closed. The switch must be used for the InfoProx Entry to generate the *door held* and *door open* alarms.
- The lock status switch (Input 1), if present, is usually part of the door strike assembly, and must be connected if lock status monitoring is enabled. This is a normally closed switch.
- The normally open exit pushbutton switch (Input 2) is used if the door lock must be released to leave the secured area.

Figure 5 illustrates the typical door connection modes.

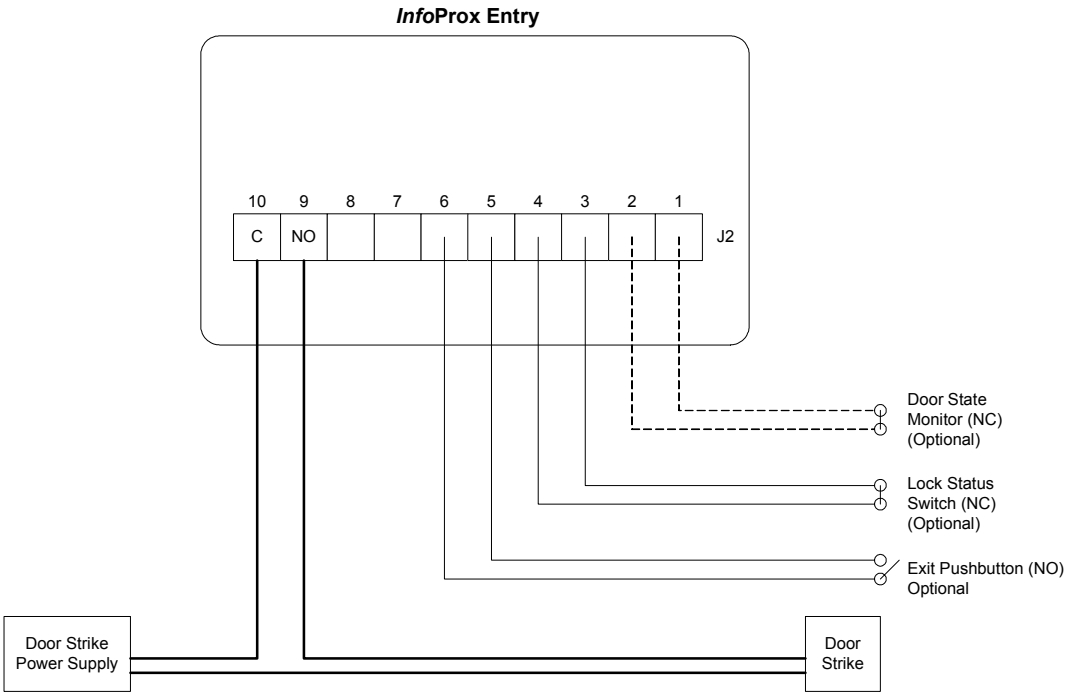

Figure 6: Typical Connections to a Door

InfoProx Entry Wiring: RJ45 Connections

If you use the InfoProx Entry in conjunction with the software utility, an RJ45 faceplate can be installed, preferably on the secure side of the door. The installation of the faceplate facilitates the connection between the PC and the door control unit by means of a patch cable through the RS485/232 converter. The converter is connected to a serial port on the PC. Figure 6 illustrates the rear view of a faceplate connection.

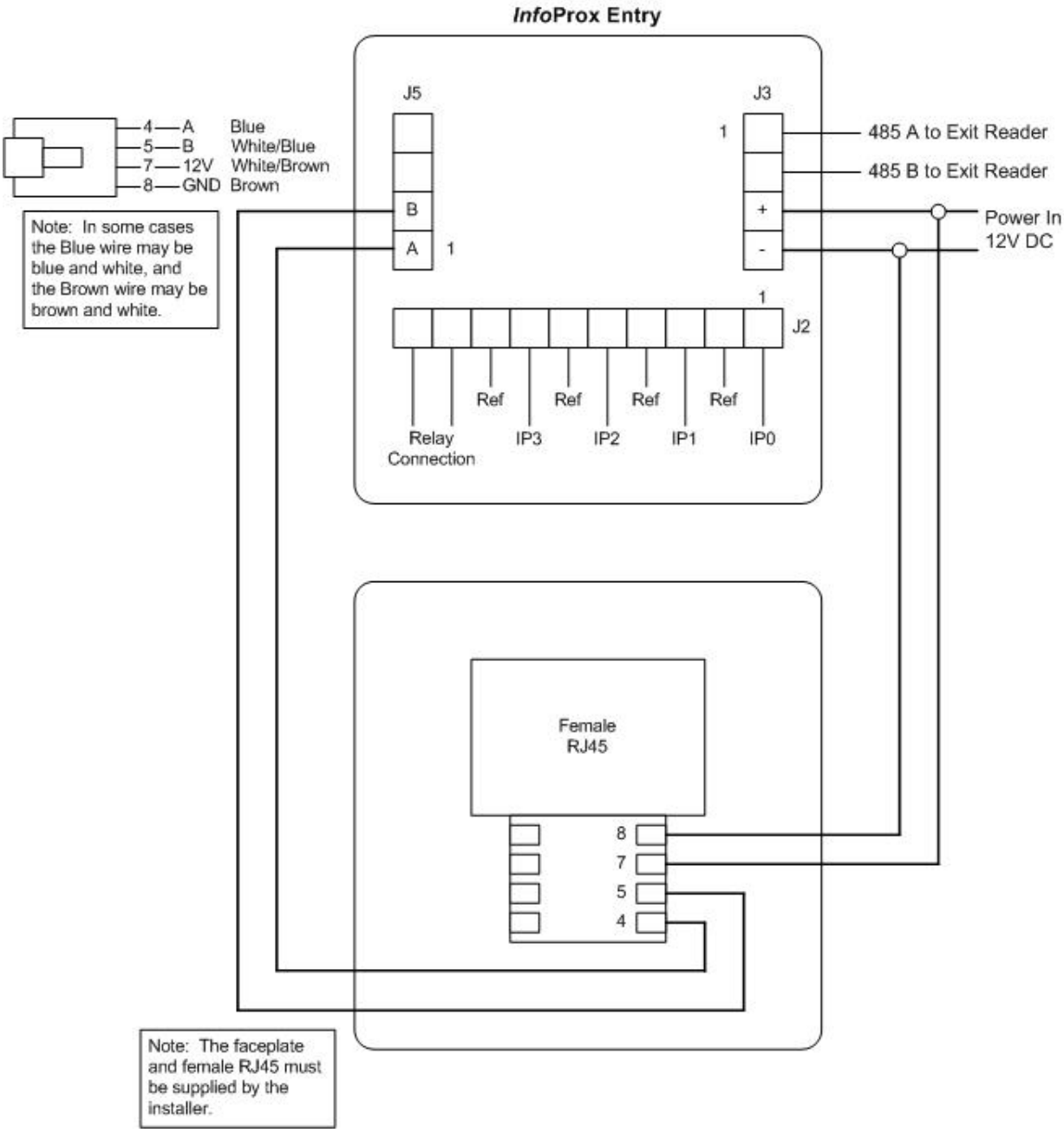

Figure 7: RJ45 Faceplate – Rear View

Power to the RS485/232 converter is supplied from the Phoenix Connector J3 to pins 7 and 8 on the rear of the RJ45 female connector.

Data communication between the reader and the PC is supplied from Phoenix Connector J5 to pins 4 and 5 on the rear of the RJ45 female connector.

Installation Checklist

1. Refer to Figure 2, Terminal and Power Connections. Remove the shipping sticker from the sounder opening.
2. Connect the power source to verify the InfoProx Entry door control unit is working properly.
3. Recheck the wiring connections; ensure that all terminal screws are securely tightened.
4. Secure the adapter plate to the containment box (if required for a U.S. installation).
5. Position the reader over the containment box and tighten the two security screws, taking care not to over tighten.
6. To prevent light from triggering the tamper sensor, verify that there are no gaps around the unit.
7. Fit the cover buttons firmly in place over the screws.

To remove the cover buttons, use a screwdriver on the outer edges to lift the covers.

Once the tamper sensor on the back of the unit is activated, the reader will sound an alarm when exposed to light.

5. Configuring the Door Control Unit

When connecting power to the InfoProx Entry door control unit for the first time, the unit initializes a default configuration. Once the unit is powered, the LCD screen displays the idle prompt:

```
InfoENTRY 16:30
   Present Card
```

16:30 is the time presented in military format. Section 3 describes how to configure your local time.

Access to all menus is through the Administration menu. The administration menu provides the operational features of InfoProx Entry and control of the following:

- Administrator password insertion (only at installation)
- Addition or deletion of access cards
- Searches for access cards
- Operational configuration of the reader (time zones and door modes inputs)
- Diagnostic testing of the reader
- Administrator password change
- Backing-up the reader database to a PC
- Displaying transaction information (card/alarm information)

Details about configuring the unit and how to use the menu options are explained below.

First Time Access to the Administration Menu

When the reader is in stand-by mode (powered-up, waiting for a transaction), the screen displays the idle prompt:

```
InfoENTRY 16:30
   Present Card
```

Accessing the Administration menu

Press **# 0 ✱** at the keypad. The menu of options displays on two screens.

```
0-Del, 1-Add
2-Find, 3-Config

4-Diag, 5-Pword
6-Backup
```

Accessing the Administration menu for the first time

1. At the keypad, press **# 0 ✱**.

   The following prompt appears:

   ```
   Set Password
   ```

2. Enter a password.

   The door control unit should emit a beep with each key press. An asterisk (✱) will appear on the bottom line of the display, indicating that each key press is recognized.

   The following prompt appears:

   ```
   Verify Password
   ```

3. **Re-enter** the **password** for confirmation.

   The following prompt appers:

   ```
   Password OK
   ```

   The display then returns to the stand-by screen:

   ```
   InfoENTRY 16:30
      Present Card
   ```

   ! If the administrator of the door control unit has not set up a password, a prompt appears asking you to set a four-digit password.

! You must record the password and keep it in a safe location. If you forget the password, there is no way to gain access to alter any part of the reader setup. You must return the reader to the dealer or manufacturer for reprogramming.

Accessing the Administration Menu after Password Setup

After the password has been setup, you can enter the password when the reader is in standby mode.

Accessing the Administration menu after password setup

1. At the standby screen, **enter # 0 ✱** then the **password.**

   The first **Administration** menu appears.

   ```
   0-Del, 1-Add
   2-Find, 3-Config
   ```

2. To go to the second menu screen, press ✱.

   The second **Administration** menu appears.

   ```
   4-Diag, 5-Pword
   6-Backup
   ```

Getting to know the configuration setup

Becoming familiar with the terms used in the setup procedure will assist you in the configuration setup of the door control unit. Here are the terms and the preparation requirements you need to know.

Terms to Know Before Configuration Set Up

- **Config Time**: This is your current time in 24-hour format, represented by current hour and minutes. T=HH:MM DD/MM/YY.
- **Config TZ**: Configure Time Zone. A single time zone can be assigned to a door control unit in order to facilitate cardholder access. Time zone allows you to split the day into two sections, Normal mode (i.e., Card plus Pin) and Time Zone mode. Time Zone mode can be either Free (Door unlocked), Swipe (Card Only), or Pin (such as GIN).

Note The Pin mode does not refer to the Pin associated with a card, but rather the Global Identification Number (GIN) that can be used by all personnel once the Time Zone mode is set to Pin.

The three Time Zone modes are less restrictive than the Normal mode. The Time Zone is usually set for the day shift and the non-Time Zone is the rest of the 24 hours.

- **Config TZ Start:** Configure Time Zone Start Time or the time at which the Time Zone will change from Normal to one of the other three choices.
- **Config TZ End:** Configure Time Zone End Time or the time at which the mode will change back to Normal.
- **Config TZ Type:** There are four types of access control associated with time zones: Normal Mode (card and PIN); PIN-Only Mode; Free Mode (door open or unrestricted-access mode; Card-Only Mode. These modes are explained in section 3.
- **Config I/Ps:** Configure the unit's inputs. There are four inputs: 0 to monitor door position; 1 to monitor lock status; 2 to monitor request to exit (RTE/RTX) switch status; and 3 is a spare input. These inputs are set at the factory. If users want to re-configure these inputs, they should contact your Dealer or Technical Support (see page 58).
- **Set Drsk:** Set the Door Strike Time. This setting determines the span of time a door lock will remain open after a card has been swiped or a PIN entered. The default time is five seconds. The door strike relay will automatically reset when the door is opened.
- **Set Drclose:** Set the Door Close Time. This setting determines the span of time a door can remain open (door held) before an alarm is triggered. The default time is 15 seconds.
- **Set GIN:** Set Global Identification Number. GIN is access without cards during a Time Zone. For instance, if a Time Zone is setup from

08:00 to 17:00, personnel who know the GIN are allowed access during these hours, but after the Time Zone expires, entrance is allowed only to cardholders. The default GIN is 1234.

- **Set Scode:** Set Site Code. If the site code is entered into the InfoProx door control unit, then all cards read by the unit must have this site code to be valid and to enable access.

  If no site code is configured during setup, the unit will allow **any** card, regardless of the site code, to be added and used to enable access. However, this condition may not provide the degree of security desired.

By default, the site code is set to –1. If the site code is set to 0 by the user, it will revert to the default or –1. This default allows any added card to be used as valid.

If the site code is enabled **after** cards are entered, the unit will check the validity of all cards in the unit's database and match to the site code. If the previously entered cards have no site code or have site codes that do not match, then the cards will be invalid and will not work to enable access.

To preview the modes, users should view the **Configuration** screens by pressing **#.** After previewing the **Set Scode** screen, pressing **#** will return users to the **Administration** menu, where they can again enter **3-Config** to start the configuration process.

Before you begin configuring

The following list prepares you for the material you will need for the setup process.

- Current time, including day, month, and year
- If the optional time zone setup is desired, decide on a time zone time parameter and who will be given access. You can have only one time zone per door control unit. If no time zone is setup, then access will be on a 24-hour clock and accessible with a valid card and PIN associated with the card. If there is no PIN associated with the card, then access will be allowed by presenting just the card, assuming that it is a valid card in the database.
- Determine if the factory defaults are adequate for door strike time and door close time. If not, determine an appropriate time for the setup.
- If you are going to use a Global Identification Number (GIN) with a number other than the default of 1234, use a 4-digit GIN.
- Optional site code

Configuring the reader

Now you are ready to configure your reader. Before you start, you need to be aware that the Configuration mode screens are set to automatically change to the next screen after five seconds. If this happens and your data has not been entered, either return to the screen at the end of the automatic sequence or press **#** to scroll through the rest of the screens and return to the Administration menu. Press **3** to restart the configuration mode sequence.

Accessing the configuration setup

1. To access configuration setup, **enter** the key sequence (# 0 ✱).
2. Enter the password when prompted.

   The **Administration** menu prompt appears.

   ```
   0-Del,1-Add
   2-Find,3-Config
   ```

3. Press **3** to access the **Configuration Setup** mode to access the operational settings of the reader to be configured.

   The **Configuration Setup** prompt appears

   ```
   Config Time ?
   0-Yes, Other-No
   ```

   as the first screen in the configuration mode setup screens: Config Time; Config TZ Start; Conf TZ End; Config TZ Type; Config I/Ps; Set Drsk; Set Drclose; Set GIN; Set Scode

After you enter data on the configuration mode screen, the next screen in the sequence usually appears automatically. However, confirmation by entering an ✱ will be required on some screens.

To skip or page through setup screens, press **#.** This will return you to the Administration screen, where you can complete another task, reenter the Configuration Setup modes, or exit.

Configure Current Time

Current time is the user's local time zone and not Greenwich Mean Time (GMT).

Configuring the current time and date

1. On the **Config Time** screen, press **0** to configure **Current Time**.

```
Config Time ?
0-Yes, Other-No
```

   The following prompt appears:

```
T=HH:MM DD/MM/YY
T=hh:mm dd/mm/yy
```

2. Enter time in **24-hour format** and enter the date as day/month/year.

```
T=HH:MM DD/MM/YR
T=08:30 15/01/02
✱ to accept
```

3. Press ✱ to accept the displayed time and date.

   If ✱ is not pressed within approximately five seconds, the unit defaults back to its default time and date.

Configure Time Zone

The time zone configuration screen appears automatically after the **Config Time** screen.

Configuring the time zone

```
Config Tz Start
0-Yes, Other-No
```

1. Press **0** to setup **Start Time**.

   The following prompt appears:

   ```
   TZone Off HH:MM
   New TZone 00:00
   ```

2. Enter a **four-digit value** equivalent to the hour and minute to start **Timezone** (i.e. 08:30). The span of the time zone is defined by first entering the start time (Config TZone Start) and the end time (Config TZone End) of the time zone.

   As you enter the last digit, the following prompt appears

   ```
   TZone=08:30
   * to accept
   ```

3. Press ✱ to accept the entered Timezone.

   The prompt changes to:

   ```
   Config TZone End
   0-Yes, Other-No
   ```

4. Press **0** to setup an **End Time**.

   The prompt changes to:

   ```
   TZone End HH:MM
   New TZone 00:00
   ```

5. Enter a **four-digit value** equivalent to the hour and minute when **Timezone is to end** (i.e. 17:00).

   After you enter the last digit, the display changes to:

   ```
   TZ=17:00
   * to accept
   ```

6. Press ✱ to accept the displayed Timezone.

   > ***Note*** As each value is entered, the reader verifies that the value is valid.

   After pressing ✱, accepting the **TZ End Time**, the prompt appears

   ```
   Config TZ Type
   ```

```
0-Yes  Other-No
```

7. Press **0** to setup time zone types, as in Section 3.7. Press any **other key** or **#** to bypass this mode.

   Once a time zone is configured and the time zone period starts, **the amber LED flashes** until the time zone period ends. For example, if the time zone that is setup starts at 08:30 and ends at 17:00, then at 17:01, the amber LED stops flashing.

To disable a Time zone, reconfigure and set both times to 00:00.

Example: Time zone allows you to split the day into two sections, Normal mode (Card plus Pin) and Time Zone mode. Time Zone mode can be either Free (Door unlocked), Swipe (Card Only), or Pin (GIN).

Note that the Pin mode does not refer to the Pin associated with a card, but rather the Global Identification Number (GIN) that can be used by all personnel once the Time Zone mode is set to Pin. The three Time Zone modes are less restrictive than the Normal mode, so the Time Zone is usually set for the day shift and the non-Time Zone is set for the rest of the 24 hours.

Time zone types

Once **Timezone start** and **end** have been set, you can define an operating mode by choosing a time zone type. If you don't want to use time zone types, press **#** at any time to bypass individual **Timezone Types** configuration.

Figure 8 illustrates the most common time zones between a start and end time of 8:00 am (08:00) and 5 pm (17:00).

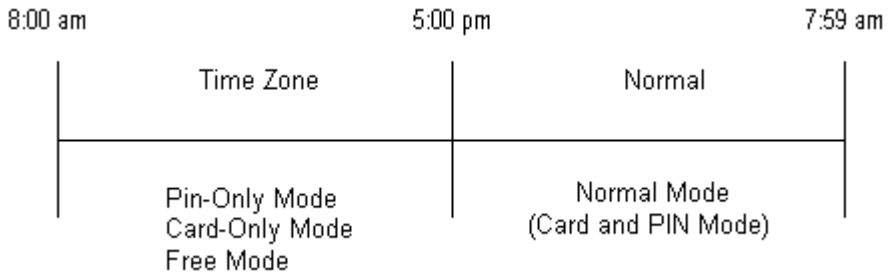

Figure 8: Common time zone configuration

Because **Normal Mode** (Card and PIN) is the **default** mode for the reader, which is in effect 24 hours, setting up a time zone for Normal mode is only useful for weekends, holidays, or special situations. For instance, a time zone might be set to Free or PIN from 08:00 to 17:00 Monday through Friday, but on weekends, the administrator might set the time zone type to Normal, allowing access only with a card. You could then set the time zone to Free or PIN on Monday, which allows the time zone times to stay intact. Then the administrator only has to change time zone types each week.

Configuring time zone types

1. At the **Config TZ Type** menu, press **0-Yes**.

   The following prompt appears.

```
1 Normal, 2-PIN
3-Free, 4-Swipe
```

   Select one of the four menu choices. These menu items are described on pages 24 ad 25.

   Note This screen will display only if **Config Time** has been set.

Configuring Normal time zone mode

This is the **default mode**, where access requires both a **Card** and a **PIN**.

1. Press **1**.

   The following prompt appears

```
TZ=Normal Access
✱ to accept
```

2. Press ✱ to accept.

Configuring PIN time zone mode

In this mode, access is granted by using a **GIN at the keypad** without a card.

1. On the **Config TZ Type** menu, press **2**.

   The following prompt appears

```
TZ PIN ONLY
✱ to accept
```

   This sets a **PIN-Only Timezone**, as in this example, a **GIN**.

2. Press ✱ to accept.

> ***Note*** When associated with a Time Zone, PIN refers to the Global Identification Number (GIN) and not the PIN associated with a particular card.

Configuring Free time zone mode

Free mode allows access during the time zone **without a card or PIN**.

1. On the **Config TZ Type** menu, press **3**.

   The following prompt appears

   ```
   TZ FREE ACCESS
   ✱ to accept
   ```

   Free means **No Card** and **No PIN** Timezone.

2. Press ✱ to accept.

This time zone would be useful in situations where restricted access to a facility is not necessary during normal operating hours. After the time zone ends; however, Normal access with a Card and PIN will be required.

Configuring Card-only time zone mode

You can gain access during the time zone only with a valid card. “**Swipe**” in this context has the same meaning as “present card”. The door control unit does not have a swipe read head.

1. On the **Config TZ Type** menu, press **4**.

   The following prompt appears

   ```
   TZ=SWIPE ONLY
   ✱ to accept
   ```

   This sets the time zone for **Card-only** access.

2. Press ✱ to accept.

After selecting a time zone type and pressing ✱ to accept, the **Config I/Ps** screen will display.

Configure Inputs

Note DO NOT CHANGE FACTORY INPUTS WITHOUT CONSULTING WITH TECHNICAL SUPPORT.

This screen appears after **Config TZ Type**.

```
Config I/Ps
0-Yes, Other-No
```

There are four inputs for the unit: 0 monitors door position; 1 monitors lock status; 2 monitors RTE/RTX switch status and 3 is a spare input. Input configurations are set at the factory. Generally, these inputs should not be reconfigured and setup mode should be bypassed by pressing **#.**

Doorstrike Time

Door strike is the time a door lock remains open.

After a card has been validated at the reader, the relay controlling the door lock is activated for the time set in **Door Strike Time** mode. During this timeframe, the door can be opened. If the cardholder does not open the door during this time, the door lock will relock and will not open. The default setting is **five** seconds.

Modifying the door strike time

Pressing **#** at the end of **Configure Inputs** displays the following **Door Strike Time** prompt:

```
Set Drsk= 05s
New Drsk=   s
```

1. Enter a **two-digit number** for the seconds desired for **Door Strike Time**.

   Once the time is set, the next screen in the **Configuration** menu sequence, **Door Close After Time**, automatically displays.

This option can be bypassed by pressing the # key, accepting the default setting of five seconds. The ✱ key can be used to correct any errors entering the Door strike time.

Door Close After Time

Door Close After Time allows you to configure the length of time the door can remain open before an alarm is activated.

Modifying the door close after time option

After the door strike time is set, the following prompt appears:

```
Set Drclose=15s
New Drclose=  s
```

To manually access **Door Close after Time**, press **#** when in Door Strike Time mode.

To change from the default setting of **15 seconds**:

1. Enter **seconds** using **two** digits. This option can be bypassed by pressing the # key, accepting the default. The ✱ key can be used to correct any errors made while entering the Door close after Time.

Door Close After Time is also known as Door Held Time or Shunt Time.

Once the time is set, the next screen in the **Configuration** menu sequence, **GIN Configuration**, automatically displays.

GIN Configuration

A global identification number can be set or this option can be bypassed. GINs can be associated with Time Zones and are used to allow access with a single number sequence, such as 5678. The **default GIN** is **1234**.

Modifying the default GIN number

To change the default, enter **four new numbers** when the prompt appears after the **Door Close After Time** screen

```
Set GIN=1234
New GIN=
```

1. Enter four numbers.
2. Wait for the confirmation beep.

   The screen changes to the next screen, **Set Scode**.
3. Press **#** to skip the Set Scode setup for now.

   This returns you to the first **Administration** menu.
4. Press **3** (Config).
5. Press # repeatedly, bypassing setup screens until you return to the **GIN** setup screen.

   You should then see the new value.

This new four-digit GIN can be associated with a **Time Zone**, if a PIN-Only Time Zone is selected. The GIN will operate the unit during the PIN-Only Time Zone until it is changed. To change the GIN again, repeat the procedure above.

GINs are convenient in situations where temporary access to a building by a group of people who have been provided the GIN is desirable. For instance, GINS are useful in situations for access to a reunion at a condominium's recreational facility that normally has secure access, or could be used to grant access to employees during an 08:00 to 17:00 Time Zone.

Site Code

The manufacturer for each batch of cards embeds the site code. Usually, the user requests site codes on a card order form. Batches of cards can also be issued without site codes. As a rule, the manufacturer will provide this code to administrators.

The prompt appears after the **GIN** is entered, viewed, or bypassed on the previous screen.

```
Set Scode=XXX
New Scode=XXX
```

To identify cards used by cardholders, the reader requires a unique site code. If no site code is entered, any card that is added will be valid and will enable access. However, if a site code is entered, only those cards with the embedded code will be valid and will enable access.

Entering a site code

1. Enter the **three-digit** site code.

   A **tone confirms** that the site code has been accepted.

2. Press **#** to continue with unit setup or wait for the screen to time out.

   You are returned to the first **Administration** menu.

Any cards entered prior to configuring a site code will not be valid cards unless they contain the site code. If no site code is entered or if 0 is entered, the LCD displays –1, indicating that no site code is being used.

Door Control Unit Diagnostic Screen Set Up

Once the site code is entered, the second stage of the door control unit setup must be completed so that the unit conforms to a user's needs. This part of the setup is accessed through the Diagnostic screen.

Accessing the diagnostic screen setup

1. Press ✱ to display the second screen of the Administration menu.

2. Press **4**.

   The following screen appears.

```
Diagnostic Tests
[S/N xxxx]
```

   This screen is **automatically** followed by the **Configure Rdr ?** screen:

```
Configure Rdr ?
No ✱   Yes #
```

   The Configure Reader screen is the doorway to unit setup, which requires user interaction. All other screens under the Diagnostic screen category are read-only and do not require user interaction.

> If you **do not** press **Yes-#** within five seconds or if you press ✱, the read-only diagnostic screens display in sequence. Once this sequence begins, you can stop it only by unplugging the unit. The diagnostic sequence will return you to the **Administration** menu when completed. Each diagnostic screen will display for the default time of five seconds.

3. Press **#** to enter the unit setup mode**.**

   The following prompt appears:

```
RDR Setup Option
# to continue
```

4. Press **#** to continue with unit setup.

   The following series of reader unit setup screens appears: Contrast, Door Mode, Keypad Enable/Disable, Exit Configuration, and Relay Idle State.

Contrast

The first screen in the unit setup sequence is **Contrast**.

To alter the contrast

1. From the Configure Reader screen, press **#** twice to continue to the Contrast screen.

   The following prompt appears:

   ```
   Alter Contrast
   1 + 2 -# Exit
   ```

2. Press **1** to set a darker display.

3. Press **2** to set a lighter display.

4. Press **#** to move to the next screen: **Door Mode**.

Door Mode

Two door modes are available:

- **Door Reader**: the standard door mode for a reader controlling access at a door. When the reader is configured as a door reader, three of the four inputs are reserved for door position, lock status and request to exit, leaving one spare input.
- **Control Post Reader**: a door mode used to validate cards, normally at a manned control point having no physical barrier or door.

To configure the door mode

1. From the Configure Reader screen, press the **#** key three times to continue to the door mode prompt.

   The following prompt appears:

   ```
   * Alter  # Exit
   Door Reader
   ```

2. Press ***** to change between the door modes.

3. Press **#** to confirm the selection and move to the next screen.

Keypad Enable / Disable

This mode enables or disables the keypad. If the cardholder has been allocated a PIN and the keypad has been disabled the cardholder will not be asked to enter a PIN when presenting his/her card to the reader.

To enable/disable keypad

1. From the Configure Reader screen, press the **#** key four times to continue to the enable/disable keypad prompt.

   The following prompt appears

   ```
   ✱ Alter  # Exit
   Keypad
   ```

2. Press ✱ to toggle the keypad on or off: *Keypad* or *No Keypad*.

3. Press # to confirm the selection and to go to the next screen: **Exit Configuration**.

Exit Configuration

The Exit Configuration option is used to configure the door control unit to support an InfoProx Exit unit and/or DIU (Door Interface Unit Module). You need to setup this feature only if you are using an exit reader/unit or DIU controlled by the primary door control unit, an InfoProx Entry.

To setup the exit configuration

1. From the Configure Reader screen, press the **#** key five times to continue to the exit configuration prompt.

   The following prompt appears:

   ```
   * Alter  #Exit
   EXIT N  DIU N
   ```

2. Press ***** to toggle between setup options: NN, NY, YN, YY.

3. Press **#** to move to the next screen: **Relay Idle State**.

   The following table shows the exit configuration setup sequences.

Display	Exit	DIU
NN	No	No
NY	No	Yes
YN	Yes	No
YY	Yes	Yes

Relay Idle State

This screen indicates the idle/active state of the relay. In the following example, the RO (Relay 0) is N/C (Normally Closed):

```
✱ Alter  # Exit
RO N/C
```

If the reader has an exit connected, then the screen displays two relays (RO + R1):

```
✱ Alter  # Exit
RO N/C  R1 N/C
```

If the relays are set to N/O, the prompt

```
✱ Alter  #Exit
RO N/O  R1 N/O
```

displays. N/O represents Normally Open.

The relay state facility is used to configure the reader for **Powered to Secure** or **Powered to Unlock** operations, depending on the type of lock used.

To set the relays

1. From the Configure Reader screen, press the **#** key six times or one time from the Exit Configuration screen to continue to the **Relay Idle State** prompt.
2. Press ✱ to set the relay as **Normally Open**.
3. Press ✱ to set the relay to **Normally Closed**.

Note Unit will reboot automatically if these settings are changed, returning you to the main menu.

6. Card Management

Adding Cards (Option 1 - Add)

Card management is accessed through the **Administration** menu:

```
0-Del, 1-Add
2-Find, 3-Config.
```

How to add a card by swiping (Option 0)

1. Press **1** to access the **Add Card** option.

   The following prompt appears:

   ```
   0-By Swipe
   1-By Keypad
   ```

   This screen allows a card to be added to the database.

   Note Each card has a **unique encoded number** (system number), which must be added either through the keypad or by a card being presented to the reader. Unless you know the embedded system number, presenting the card to the reader is the best way to enter this number.

2. Press 0 (By Swipe) or 1 (By Keypad).

Add a card by swiping

1. Press **1** from the Administration menu to access the **Add Card** option.

   The following prompt appears:

   ```
   0-By Swipe
   1-By Keypad
   ```

   This screen allows a card to be added to the database.

2. Press **0** to add a card by presenting it to the reader.

   The following prompt appears allowing the card's hotstamp number to be added to the database.

   ```
   I/P NUM XXXXXXXX
   HStmp=  XXXXXXXX
   ```

3. Enter the **hotstamp number** on the card by using the keypad. The hotstamp number must be 8 digits. If needed, add zeros (0) to the beginning of the hotstamp number to make 8 digits.

   Once the **last digit** of the hotstamp number is entered and appears, a **long tone sounds** and the following screen appears:

   ```
   Present Card
   ```

4. **Present card**. This enters the encoded **system** card number into the database.

   > ***Note*** To cancel the operation, press # to return to the **Administration** menu without adding the card.

   When the system card number is successfully added, the following prompt displays

   ```
   PIN ?
   1-Yes, Other-No
   ```

5. Press **1** to assign a **PIN** to the card.

   The following prompt appears:

   ```
   Set PIN XXXX
   ```

6. Enter the four-digit **PIN**.

7. To add the card **without a PIN**, press **any key** other than 1 at the PIN prompt, as in step 2.

   Before returning to the I/P NUM prompt, the display indicates either that the card system number has been added or that the card system number already exists in the database.

The **hotstamp number** is usually the number stamped on the card. This number is not always the same as the embedded system number. For this reason, the hotstamp number is more or less an arbitrary number, which means the hotstamp number does not have to be used if the company has another system of numbering. However, as a rule, it may be more convenient to use the hotstamp number on the card for administrative purposes and for convenience. If the software utility is used, these numbers are listed in the database in conjunction with the system number.

If the hotstamp number is **fewer than eight-digits**, it must be preceded with **zeros**. The ✱ key can be used to reset the display and overwrite any errors.

Use ✱ to correct errors during the procedure. When a PIN is successfully entered, prompts indicate either that the card number has been added or that the card number already exists in the database. If the card is already in the database, re-enter a PIN. The display then reverts to the I/P NUM prompt.

Use # at any time to return to the I/P NUM prompt. If # is entered; however, the card will not be added. If fewer than four digits are entered for the PIN, the prompt returns to the I/P NUM prompt after a timeout period. If this occurs, the card is not added.

Add a card from the keypad

1. Press **1** from the Administration menu to access the **Add Card** option.

   The following prompt appears:

   ```
   0-By Swipe
   1-By Keypad
   ```

   This screen allows a card to be added to the database.

2. Press **1** to access the add a card from the keypad option, as shown in above.

   The following prompt appears:

   ```
   I/P NUM XXXXXXXX
   HStmp=
   ```

   Using the keypad of a unit, a card can be added to the database by entering the card system number.

3. Enter a **hotstamp number**. If the hotstamp number is fewer than eight digits in length, then the number must be preceded with zeros (0)

   Once a **hotstamp number** is entered, the following prompt appears:

   ```
   I/P NUM XXXXXXXX
   Sys No=
   ```

4. Enter the embedded **system number**. The system card number **must be entered in decimal format**. If the system card number contains fewer than eight digits, the number entered must be preceded with zeros (0).

   > Either the embedded system number is the same as the hotstamp number or the manufacturer provides the system number. If you do not have a system number, use the hotstamp number preceded with the appropriate number of 0s. The system number will be associated with the hotstamp number entered when the card is presented to the reader. To find the system number, once a card is added, go to 2-Find and follow directions for a search.

   When the card system number is successfully added, the following prompt appears, allowing a PIN to be assigned to the new card.

   ```
   PIN ?
   1-Yes, Other-No
   ```

   If you do not want to assign a PIN, then press # or any other key to bypass the next step.

5. Press **1** to **assign a PIN** to the card.

   The following prompt appears:

   ```
   Set PIN XXXX
   ```

6. Enter a four-digit PIN.

7. To add the card without a PIN, press any key other than 1 at the PIN prompt, as in step 4.

   Before returning to the I/P NUM prompt, the display will indicate whether the card system number has been added or if the card system number already exists in the database.

Delete A Card (Option 0 – Del)

To delete cards, access the **Administration** menu:

```
0-Del, 1-Add
2-Find, 3-Config.
```

To delete a card

1. Press **0**.

   The following prompt appears:

   ```
   I/P NUM XXXXXXXXX
   HStmp=  XXXXXXXXX
   ```

   This option allows any card in the database to be deleted.

2. Enter the **hotstamp number** on the unit keypad to select the card for deletion. If a hotstamp number has fewer than eight digits, precede the number with zeros (0).

   When a card is found, the hotstamp number, together with the associated PIN, displays, as follows:

   ```
   DEL? 0-YES
   No: XXXXXX XXXX
   ```

3. Press **0** to delete the card.

   The following screen momentarily displays.

   ```
   CARD DELETED
   ```

4. If any other key is pressed, the following screen displays:

   CARD NOT DELETED

Press **#** to **exit** the **Administration** menu **without deleting the card**. Press any other key to return to the I/P NUM prompt.

Card Search (Option 2 - Find)

To find a card, access the **Administration** menu:

```
0-Del, 1-Add
2-Find, 3-Config
```

To find a card by hotstamp number (option 0)

1. Press **2** on the **Administration** menu to search for a specific card in the database. Cards are stored in order of the encoded system card number.

   The following prompt appears, presenting search options.

   ```
   0-HSTMP, 1-SWIPE
   2-ALL CARDS
   ```

2. Press **0** to display the **I/P NUM** prompt.

3. Enter an eight-digit hotstamp number.

   Note If the number printed on the card is less than eight digits in length, preceded it with zeros. Use ✱ to correct errors made entering the hotstamp number.

   An following example of a search result appears when the hotstamp number has been successfully entered.

   ```
   SYS No: 00135F
   No:00004559 1234
   ```

   The screen will display the encoded card number in hexadecimal format, the hotstamp number in decimal format, and an associated PIN. If the search was not successful, **CARD NOT FOUND** appears.

   The system number is shown in hexadecimal format, whereas the hotstamp number and PIN are shown in decimal format.

Note If you added a card by the swipe method and do not know what the system number is, use the Find command and search by the hotstamp number associated with the card system number. The system number will be reported in hexadecimal format.

To find a card by swipe (option 1)

1. Press **2** on the **Administration** menu to search for a specific card in the database. Cards are stored in order of the encoded system card number.

   The following prompt appears, presenting search options.

   ```
   0-HSTMP, 1-SWIPE
   2-ALL CARDS
   ```

2. Press **1**.

   This action enables the search for the encoded card number and associated PIN stored in the reader database by presenting the card to the reader.

3. **Present a card to the reader** within the appropriate read range for that card type. When the unit finds the card record, the system number, hotstamp number and PIN appear, as follows.

   ```
   SYS No:  00135F
   No.:00004559 1234
   ```

   By using the swipe method, several cards can be presented in turn. If an incorrectly formatted card is used in the transaction, **BAD CARD** is displayed. If a card transaction does not occur before the timeout period elapses, the display returns to the Administration menu prompt.

Pressing **#** at any time returns the display to the **Administration** menu prompt.

To search for all card records from the lowest number

1. Press **2** on the **Find** prompt, as shown below.

```
0-HSTMP, 1-SWIPE
2-ALL CARDS
```

   This changes the screen to the following:

```
From 1st-1
Last-9, HstNo-2
```

2. Press **1** (From 1st) on the Search All Cards screen to display all cards individually by system number, starting with the card with the lowest system number, as shown in the following example:

```
1 Dn 2 Up000001
No:00004959 1234
```

3. Use **keys 1 and 2** to step through the database **(down and up, respectively)--**or 1 down, 2 up. The associated PIN and hotstamp number displays for each card.

> ***Note*** In the display, as shown in step 2, 000001 is a sequential number indicating the position of the card in the database, starting from the card with the lowest system number (being allocated 000000) up to the total number of cards in the database.

To search for all card records from the highest number

1. Press **2** on the **Find** prompt, as shown below.

```
0-HSTMP, 1-SWIPE
2-ALL CARDS
```

   This changes the screen to the following:

```
From 1st-1
Last-9, HstNo-2
```

2. Press **2 (HstNo)** to initiate a search by entering a hotstamp number on the keypad. If the hotstamp number is less than eight digits, the number must be preceded with zeros (0). Use ✱ at any time to correct errors when entering the number.

   When the card has been successfully found, the hotstamp number, the PIN, and the card record number display.

3. Use keys 1 and 2 to step through the database (down and up, respectively).

   If the hotstamp number is not found, the display reverts to the I/P NUM prompt.

Diagnostic Tests

To run a diagnostic test

1. Press ✱ when in the **Administration** menu to display the remaining available menus.

```
4-Diag, 5-Pword
6-Backup
```

2. Press **4** to access the **Diagnostic Test** option, which allows a range of functional tests of the reader to be performed. (**See section 5 for details**).

Change Password

To preserve security, change the program password periodically.

To change the password

1. Press ✱ when in the **Administration** menu to display the remaining available menus.

```
4-Diag, 5-Pword
6-Backup
```

2. Press **5** to change the password.

   The following prompt appears:

```
Set Password
```

3. Enter a **four-digit password**. As the password is entered, an **asterisk** appears on the display and **the reader emits a beep** at each key press. After the password is entered, the prompt

```
Verify Password
```

   requests verification.

4. Re-enter the password.

   The password is accepted upon verification and the following prompt appears:

```
Password OK
```

   When a reader is first installed, no password is stored. You must follow steps 1 through 4 to enter a password code.

THE PASSWORD MUST BE RECORDED AND STORED IN A SAFE LOCATION. IF THE PASSWORD IS FORGOTTEN, THERE IS NO WAY TO GAIN ACCESS TO ALTER ANY PART OF THE READER'S SETUP. IF THIS HAPPENS, THE READER MUST BE RETURNED TO THE SUPPLIER FOR REPROGRAMING.

PC Backup

Note In addition to the following instructions, see the Software Utility Manual for more information about this application.

To access the software utility backup

1. Press **6** to access the **Software Utility Backup** tool.

```
4-Diag, 5-Pword
6-Backup,
```

The following prompt appears:

```
CONNECTING TO PC
```

If the following prompt appears the reader has not connected to the workstation and the backup utility is not operating.

```
NO CONNECTION
```

Note Uploading a new database from a PC **overwrites** the current database in the reader

Note To use the **Backup** option, the unit must be connected through an RS485-RS232 converter that is connected to the PC, running the PC/software backup program.

7. DIAGNOSTIC ROUTINE

Once the InfoProx Entry reader has been set up and configured, check the current setup status and operational functions of the reader by starting the diagnostic routine. The diagnostic routine menu also allows you to change the reader setup, as was explained in section 4.

Initiating The Diagnostic Routine

To run the diagnostic routine

1. Enter (**# 0 ✱**), the administration key sequence.
2. Enter the **password**.

   The following screen appears.

   ```
   0-Del, 1-Add
   2-Find, 3-Config
   ```

3. Press ✱ to open the second setup screen.

   ```
   4-Diag, 2-Pword
   6-Backup,
   ```

4. Press **4** to open the following screen.

   ```
   InfoProx ENTRY
   [Build 0.155]
   ```

   Note The first part of the diagnostic routine is automatic and will test the reader's functionality.

   There are several screens that will appear and then end with the following screen.

   ```
   Configure Rdr ?
   No ✱  Yes #
   ```

5. Press ✱ to start the diagnostic routine. The display scrolls through the various screens.

   By pressing **#**, the user enters the reader setup mode, as shown in section 5. If setup has already been done, then bypass this mode by pressing ✱ to enter the read-only diagnostic sequence.

Displaying Diagnostic Screens

The following sequence provides a read-only view of screens that provide information about the current InfoProx Entry unit setup and configuration.

> Enter ✱ to start the automatic diagnostic routine, as above, and to move through the following diagnostic screens. Each screen in the sequence will be titled Current Setup or Diagnostic Tests. Once the routine is started, it can only be stopped by shutting off the unit's power. When the routine is finished, it returns the user to the Administration menu.

To display diagnostic screens

- **Relay idle state:**

```
Current Setup
RO N/C
```

  On this screen, the relay is configured as N/C (normally closed), opening when a valid transaction is initiated (i.e., presenting a valid card).

- **Keypad is enabled. If keypad entry is setup, this screen will appear:**

```
Current Setup
    Keypad.
```

- **Door is controlled:**

```
Current Setup
Door Reader
```

> On this screen, the reader is configured to control a door. By default for a door reader, input 0 monitors door position and input 1 monitors lock position. Input 2 is for an egress button, while input 3 is unassigned.

- **Indicates whether the reader has a slave device (exit reader unit) attached and/or is connected to a DIU (Door Interface Unit):**

```
Current Setup
SLAVE N  DIU N
```

- **Number of cards currently in the database:**

```
Diagnostic Tests
Cd37    Fr57304
```

  In this example, there are 37 cards in the database and room for 57304 more. The total capacity of the database is 57341 cards. Numbers are displayed in decimal format.

- **Timezone setup:**

```
Diagnostic Tests
PIN Only
```

In this example, a PIN Only Timezone is configured.

- **LED testing sequence:**

```
Diagnostic Tests
Red Led 0

Diagnostic Tests
Green Led 0

Diagnostic Tests
Amber Led 0
```

- **Keypad testing:**

```
Diagnostic Tests
Key Pressed =
```

Press every key on the reader to test its functionality. If working, the key displays on the screen.

- **Testing the read head:**

```
 Badge Exit Head
```

- **Testing the four reader inputs, showing status as open, or closed:**

```
I/P No.0123
    ssnn
```

The example given above indicates that inputs 0 and 1 are Closed (ss) (s=shorted) for this reader, while input 2 is Open (n) and input 3 is Normal (n = open circuit mode).

To **hold** the diagnostic test on the inputs' check, press #. An **H** displays to the right of the input settings. By opening and closing the door, switch the inputs between OPEN and CLOSED to check that the reader is monitoring them properly.

1. Press **#** again to leave the inputs check and continue the diagnostic routine:

   Once the diagnostic checks have been completed, the reader displays the screen below before returning to the normal idle display:

```
4-Diag, 5-Pword
6-Backup,
```

If an exit reader is connected to the entry reader, the diagnostic routine tests the exit's LED's and keypad in the appropriate sequence, as explained in the Installation Guide. When the entry reader is in diagnostic mode, if there is an exit reader connected, the routine would be as follows: entry tested, then exit reader tested, in sequence through the routine – such as entry LED's, exit LED's, and so on.

Final Diagnostic Checklist

1. Use the InfoProx Reader diagnostic routine to check the functionality of the reader. Present a valid card to ensure that the reader performs as required.

2. Secure the adapter plate to the containment box, position the reader, and tighten the two pin-hex security screws ensuring that they are not over tightened.

> ***Note*** To prevent light from triggering the tamper sensor, ensure that there are no gaps around the unit.

3. Fit the cover buttons firmly in place over the screws.

> ***Note*** To remove the cover buttons, use a screwdriver on the outer edges to lift the covers.

8. InfoProx Technical Description

The Software House InfoProx Entry Reader is considered to be the industry's smallest proximity reader to incorporate an LCD and a keypad. Designed to be simple to install and easy to use, the InfoProx reader can feed information about transaction outcomes directly back to the cardholder.

The InfoProx Entry reader is intended to control access to restricted areas and is designed to be as compact and discreet as possible. The reader consists of the following main units:

- A read-head.
- Twelve character, standard layout, tactile response keypad that allows Personal Identification Numbers (PINs) to be used.
- Three high-intensity LED indicators: red, green, and amber.
- Two-line by sixteen-character Supertwist LCD with backlight.
- Flame-retardant polycarbonate enclosure containing fully encapsulated electronics, sealed to IP65, and protected by a tamper sensor.

These parts are housed inside a polycarbonate enclosure with a LCD screen and three LED indicators. The reader’s electronics are sealed so that it is both weather and vandal resistant. If a fault occurs, the unit can be replaced and the reader can be made operational in minimal time; this replacement will not affect other readers.

The reader electronics are totally encapsulated, so the PCB components cannot be accessed. The only components visible at the back of the reader are connectors, the tamper sensor and the buzzer. Despite being small enough to mount onto an electrical containment box, the InfoProx Entry reader has the ability to display up to 32 characters of useful information for the cardholder and administrator.

The reader may be mounted directly onto a standard UK or European electrical containment box (USA installations require an adapter plate). Standard conduit and fittings can be used. Two stainless steel tamper-resistant fixing screws are supplied, which are concealed behind specially molded covers when installation is complete.

The keypad is used to open a password-protected administration menu. The menu allows the device to be configured locally, including PIN validation is required, which offers additional security.

The InfoProx reader controls all local door functions, thereby removing the need for additional controllers or I/O (Input/Output) units.

Readers run on a nominal 12 volt supply (7V - 15VDC, 250 mA Max). Power can be supplied either directly from a local source or from associated units. Power supply inputs are filtered, Transzorb protected, and reverse voltage protected.

Exit Readers

Each reader can service an additional exit reader, which can be used on the inner side of a secure access point. The InfoProx Entry reader can have one full exit reader with an LCD and a keypad.

The full exit reader is an InfoProx Entry reader, which differs from the entry in that it does not have internal RAM and therefore cannot hold card IDs and status data. The information is held in the attached entry unit's database.

Inputs and Outputs

Each reader monitors up to four inputs: input 0 monitors door position; input 1 monitors lock status; input 2 is for push button; and input 3 is a spare unit.

Each reader has one relay, rated at 30VDC @ 5 Amps. For normal door mode, this relay is reserved for door strike. For example, the relay automatically fires on a valid card swipe. Each reader has a single dry contact relay that provides a control signal to external units.

The relay is energized through a discrete, EEPROM-controlled switching circuit, which determines the Relay Idle State.

The number of inputs and outputs can be extended. If the reader is connected to a Door Interface Unit (DIU), conditions are monitored from the DIU directly, thus freeing up all four inputs and one output on the reader.

The Read-Head

The Software House InfoProx Entry reader is manufactured to use proximity technology, licensed from HID Corporation. The following read ranges are supported:

- ProxCard® II Card: 10cm (4")
- ISOProx® II Card: 9cm (3.6")
- ProxCard™ Plus Card: 6cm (2.4")
- ProxKey™ II Fob: 4cm (1.6")

Card Technology

The Software House InfoProx Entry reader is manufactured to use proximity technology, under license from HID Corporation. The following card types are supported:

- ISOProx® II Card
- ProxCard™ Plus Card
- ProxCard® II Card
- ProxKey™ II Fob

The Keypad

The 12-way keypad on the front of the reader is an integral part of the reader's functionality. Cardholders must enter their Personal Identification Number (PIN) after a valid card swipe, before access is granted in normal mode.

The LEDS

The three high intensity LEDs (red, green, and amber) are displayed at the front of the reader. LEDs indicate outcomes of card swipes. Possible responses to card swipes are as follows:

LCD Display	LED
Card Valid	Green
Invalid Card	Red
Not In System	Red
Error Reading Card - Retry	Red
Close Door	Red
Retry PIN Number	Amber
Time Zone Set	Amber Blinking

Table 2: Card Transaction Displays

The LCD Panel

The two-line by 16-character Liquid Crystal Display (LCD) provides useful card swipe and diagnostic information, and is vital for configuring the reader. Normally, the reader will display a message, similar to the following example:

```
InfoENTRY 16:30
  Present card
```

The address and status of the reader are displayed on the top line, while the result of the card swipe and the current time are displayed on the bottom line of the LCD.

LCD Contrast Control

The LCD contrast can be adjusted by using the Reader Setup program.

Note See Section 7: Installation; “Setup procedure for the InfoProx Entry reader.”

Batteries

A PCB-mounted 3.6V rechargeable Lithium battery provides backup power for the RAM IC. The battery ensures that the database is maintained, even if the reader is disconnected from the main power supply.

Circuitry is provided to permit trickle charging of this battery from the reader supply.

Note The charging process for a discharged battery may take approximately five days.

InfoProx Entry PCB

General

Reader electronics are totally encapsulated and therefore, PCB components cannot be accessed. The only components visible at the back of the reader are connectors, the tamper sensor, the RS485 terminator loop, and the buzzer. The following major components of the reader are described in the following sections.

Relays

Each reader has a single dry contact relay that provides a control signal to external units. The relay is energized through a discrete, EEPROM-controlled switching circuit, which determines the Relay Idle State.

The Relay Idle State function (when the reader is available for a transaction) defines whether a relay is:

- Normally Closed - relay energized, opening on a valid card swipe or power fail, Powered to Secure.
- Normally Open - relay de-energized, closing upon a valid card swipe or power fail, Powered to Unlock.

The Relay Idle State is configured through the reader setup program.

Note Readers controlling fire exits may be configured Powered to Secure mode, depending upon local codes.

Tamper Switch

An optical tamper sensor on the board activates when the unit is removed from the wall, triggering an alarm.

Memory

The reader is supplied with a 512K Static RAM chip (HM628128LP-10 or equivalent). During normal operation, the IDs of all valid cards are held in RAM. Details of all transactions that occur at the reader are stored in RAM and can be downloaded to the workstation when communications are restored.

Interconnections

InfoProx Entry reader is designed for ease of installation and maintenance. Interface connections between the reader circuit board and external items, such as the exit reader or door locks, are made by means of connectors mounted on the back of the unit. The function of each of these connectors is detailed below.

Power Connector

Power is supplied to the board via connector J3. Figure 9 shows the layout of the connections:

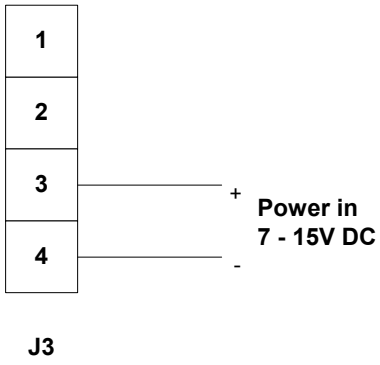

Figure 9: Power Connector with Nominal 12V DC Power Supply

Power for the reader can be supplied locally, using a Door Interface Unit or a 12V DC power supply.

Reader Inputs & Outputs

For standard door mode the following applies: input 0 monitors door position; input 1 monitors lock status; input 2 is for push button; and input 3 is a spare unit. However, these defaults can be overwritten.

The reader has one relay, rated at 30VDC @ 5 Amps. In normal door mode, this relay is reserved for door strike, such as relay automatically fires on a valid card swipe. The four inputs and the relay output for the reader are connected in the ten-way Phoenix Contact J2.

Exit Reader Connections

The full exit reader connects to the entry reader through an RS485 port. The connection is made from connector J3 on the master reader to connector J3 on the exit reader.

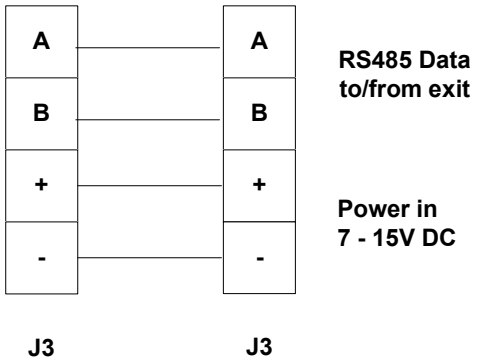

Figure 10: Exit Reader Connections

Reader Types

There are two types of readers: Door Readers and Control Post Readers.

Door Reader

1 Master reader (plus an optional full exit).

Application for the Reader

The Door Reader is designed to control and monitor a door/barrier. Input 0 to the reader monitors the door position (open or closed); input 1 monitors the lock status; input 2 is used for a request to exit; and the relay is used for the door strike.

When a valid card is swiped through the read head, the door lock is released for a time (lockopentime - configurable at the reader). Input 0 is masked or shunted for a time (doorcloseafter), configurable at the reader to enable entry or exit through the door.

If the door is still open after this time period has elapsed, the LCD displays a Door Held Open alarm. If the door is not opened within lockopentime, the reader returns to an idle state and the card has to be re-presented. A momentary contact switch can be connected to input 2, allowing the door to be opened from the secure side without activating an alarm. This is called request to exit (RTE or RTX).

The following illustrates the door reader wiring requirements.

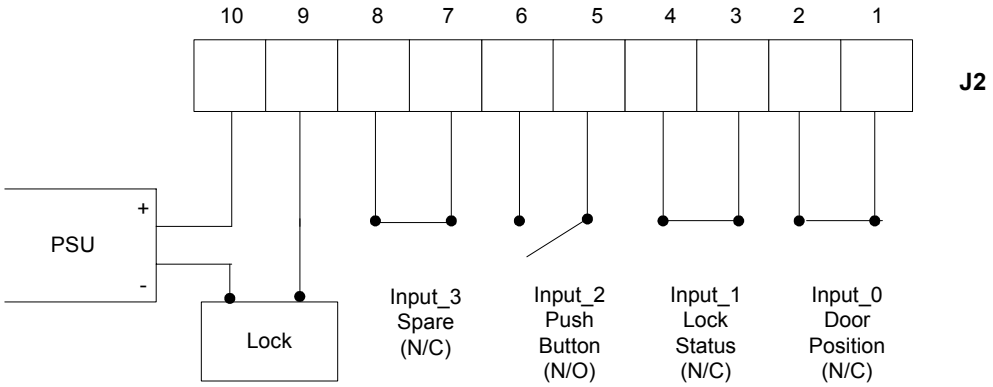

Figure 11: Door reader wiring

Functional Checks

Use the diagnostic routine to check the inputs to the reader. Input 0 (door position) and input 1 (lock status) should be ON when the door and lock are closed; these inputs should be OFF when the door and lock are open. Input 2 should not be ON unless the push button is pressed.

Control Post Reader

1 Master reader

Application for the Reader

The Control Post reader is designed for use at a manned location, where there is no physical barrier. None of the inputs are reserved and a valid card swipe does not fire a relay. The purpose of this mode is to record whether or not a person has passed this point, providing data for a transaction report.

Functional Checks

Use the diagnostic routine to test the inputs to the reader. When in Control Post mode, the reader's four inputs are non-assigned and can be configured as "normally on" or "normally off," depending on what the input is monitoring. A diagnostic swipe will show the current state of these inputs.

Technical Support

If you have post-sale technical problems operating the InfoProx Entry Reader or Software Utility program, contact your dealer. Software House provides a Customer Support Center, Monday through Friday from 8:00 am to 8:00 pm, Eastern Standard Time: 1-781-890-2287 or 1-800-392-2873.

Before calling, please check your manual and make sure that the unit is setup and powered properly. If you still need to call, have the following information available:

- Product name and number
- Version
- SPASS number
- Clear description of the problem

9. Glossary

Adapter Plate*:* A metal plate used to convert the reader from a European to a U.S. electrical containment box standard.

Alarm event: Activities such as door held or door forced. Transaction reports contain alarm events.

Alarm sound device duration: The length of time the sounder will be active if a door held or forced occurs.

Browser*:* A computer application, such as Microsoft Internet Explorer or Netscape, enabling Internet access and the viewing of web pages.

Card event: Cardholder door access and rejects. Transaction reports contain card events.

Cardholder: A person to which a card number has been assigned.

Cat 5*:* An Ethernet cable supporting 100mbps, using either unshielded twisted pairs (UTP) or shield twisted pairs (STP).

Containment Box: A metal box used to contain wires and connectors for light switches, sockets, or various other devices.

Crossover Cable*:* A cable with Transmit pin(s) on one end wired to Receive pin(s) on the other. Sometimes referred to as a “null modem cable”.

Decimal Format*:* The representation of a numerical quantity using digits 0-9 (base 10).

Door Control Unit (DCU): The InfoProx Reader is a door control unit, providing access control.

Door Control Unit System: The DCU system encompasses the entry door control unit, the exit reader, and any peripheral devices, such as the DIU.

Door forced: A forced entry through a door. The door control unit detects a door-forced condition when the Door Sense Monitor (DSM) activates without a valid card access or REX.

Door held: A door held alarm sounds after a valid card access if the cardholder holds the door open after the door open time expires.

Door Interface Unit (DIU): A device designed to connect to a door control unit, providing additional inputs, outputs, and alarms.

Door open time: The length of time that the door can be open after a valid card access. The door open time is sometimes referred to as the shunt time.

Door Override: A mode where the door is unlocked.

Door sensing input: An input that monitors the Door State Monitor (DSM) switch.

Door strike time: The length of time that the lock will be open after a valid card read.

Door State Monitor (DSM): A switch that indicates whether a door is open or closed.

Download*:* The InfoProx door control unit is the central or controlling device from which users download data to a backup program on a computer.

Entry Reader*:* The InfoProx Entry Reader is a door control unit with memory, enabling it to work as a standalone access control device.

EtherProx System: A system defined by all the components that make EtherProx function as an integrated door control unit.

Ethernet*:* The most widely used local area network (LAN), sending its communications through radio frequency signals carried by coaxial cable to computers in the network. TCP/IP is the most common software protocol for communication using the Ethernet.

Exit Reader*:* An InfoProx Exit reader connects to an Entry Reader (either EtherProx or InfoProx) and serves as a remote access device or as a device on the secure side of a door used to exit that door.

Extended door open time: Additional time that a door will be shunted. For example, you can use extended door open time for disabled cardholders or for doors that are meant to be held open longer such as airport loading gates.

File Transfer Protocol (FTP): A TCP/IP software protocol used to transfer files between computers.

Gin: Global Identification number.

Global PIN: Global Personal Identification number.

Hardware address: See MAC address.

Hexadecimal Format: Hexadecimal is a convenient way to illustrate binary code values with a numeric quantity using 0-15 digits and combining 0-9 + ABCDEF as values. Example: 0025BA .

Hotstamp Number*:* A number stamped by the manufacturer on the outside of a card. It is not always equivalent to the card number, which is the encoded system number.

IP Address: Internet Protocol address is the unique 32-bit number that serves as an address for a node in a TCP/IP network, for example, 172.31.10.20.

Liquid Crystal Display (LCD): A common display technology used by the reader.

Light Emitting Diode (LED):. A display technology that emits light when conducting current.

Local Area Network (LAN): A communications network that serves users within a confined geographical area. It is made up of servers, client workstations, and network operating systems, such as Windows NT or Unix that allow various nodes to communicate and share data within the LAN. Data transfer is managed by a transport protocol such as TCP.

Lock sensing input: An input that monitors a lock sensor that is available on some locks.

Lock sensor: Indicates whether a lock is engaged.

MAC Address: The unique 48-bit address burned into Ethernet and Token Ring adapters, identifying a specific network card from all others. The address is normally shown as 12 hexadecimal nibbles, for example, 00-50-F9-3A-64-BC.

NO/NC: Normally Open or Normally Closed contacts.

PIN: Personal Identification Number used with cards to allow access.

PIR: Passive infrared switch. Typically used for a REX.

Power to secure: Indicates that a door is locked (secured) when the door strike relay is powered (engaged).

Power to unlock: Indicates that the door is unlocked when the door strike relay is powered.

Proximity*:* A type of reader (read head) that operates without a card actually touching the reader. The proximity reader uses wireless RF technology.

Reader*:* The InfoProx Entry Reader is the door control unit; however, reading cards to allow access is only one function of the unit.

Relock delay time: The amount of time, in seconds, to delay relocking the door after a valid card access. Sometimes referred to as relock time.

Relock time: see Relock delay time.

Request to exit input: The input that monitors the Request to exit (REX or RTE) switch. The REX switch might be a pushbutton or PIR. This input is frequently placed on the secure side of a door to allow egress without a card read.

REX: See request to exit.

Site Code: The site code is an encoded three-digit number that differentiates one set of cards from another. The site code is embedded by the manufacturer of the cards, usually at the request of the user.

Sounder*:* The piezoelectric device at the back of the InfoProx Reader from which sounds emit, such as alarms or confirmation beeps. This is also called the Sound Device.

Standard door open time: See Door open time.

Supervised input: An input that detects four states: normal, alarm, open circuit, and short circuit.

Swipe*:* To swipe a card is to present a card to the reader within the read range.

System Number*:* The system number is an embedded card number that appears in hexadecimal format in the door control unit's LCD screen.

Tamper Sensor*:* A light-sensing device on the back of the reader that sounds an alarm when the unit has been tampered with.

Time zone end: Specifies the end time for the time zone type.

Time zone start: Specifies the start time for the time zone type.

Time zone type: Specifies the access type. For example, GIN, Door override, or Card only.

Transaction: Record of an event logged into a report file. Examples of events are alarms or actions, such as door access, door forced, or door held.

Unlock time: See Door strike time.

Unsupervised input: An input that detects two states: normal and alarm.

Upload*:* From the software backup utility on a computer, the user can upload data to the reader. The reader is the primary and controlling device from which you can download data to a computer.

Table of Figures

Figure 1: PC and Exit Reader Connections 4

Figure 2:Terminal and Power Connections 15

Figure 3: Exit Reader Connections 16

Figure 4: InfoProx connected to exit reader and PC 17

Figure 5: Inputs and Outputs on J2 18

Figure 6: Typical Connections to a Door 19

Figure 7: RJ45 Faceplate – Rear View 20

Figure 8: Common time zone configuration 32

Figure 9: Power Connector with Nominal 12V DC Power Supply 65

Figure 10: Exit Reader Connections 65

Figure 11: Door reader wiring 67