CEM SYSTEMS
From Tyco Security Products

emerald TS300f Intelligent Fingerprint Terminal™

Quick Installation Guide

This guide contains the basic instructions for installing the emerald TS300f - Intelligent Fingerprint Terminal.

For a complete description of emerald TS300f and its features, refer to the Technical Product Specification at: http://www.cemsys.com/emerald

TSR-QG-0072-1

Specifications

Required tools

Hex security screwdriver	Size H20
Star head screwdriver	Size PZ3

Part	Rating
emerald TS300f	-20°C to 70°C (4°F to 158F) flame-retardant polycarbonate. IP65 rated
DC power (unit only)	12v nominal (10v – 14v) @500mA peak. (Typically 300 – 400mA) [a]
Power over Ethernet	15W power to the terminal only. Lock and/or exit reader power should be supplied separately
Inputs	Four analogue inputs - voltage supplied
Comms to exit reader	RS485 serial comms using Wiegand protocol
Comms to system host	10/100 Base-T TCP/IP CAT5/5e
Dry contact outputs	DC30V @ 5a

a. If the DC supply is less than 12V @ 500mA a separate PSU is required for the lock

1 Software Setup

Adding the device to AC2000

1. Open **AC2000 | Device Configuration | Devices**.
2. In the left pane, expand the **Controller** to which the terminal is being added.
3. Right click the appropriate **Device group** and select **Add Device**.
4. In the **Device Type** drop down list, select the emerald model being installed (**TS300**).
5. In the **Configuration Mode** drop down list select the setting that matches your hardware setup.
6. In the **Device Number** drop down list select a device number.
7. Enter a unique description for the device in **Device Location** .
8. Enter the unique **MAC Address** of the device. (To display the MAC Address on the terminal select ***System information | Network***).
9. Enter the unique **IP address** of the device.
10. Click **Add** to complete the setup.

Configuring Device Inputs

If inputs are used to trigger alarms or events in AC2000 AED they must first be configured in the AC2000 Devices application. (See AC2000 Setup Guide.)

Card Definitions

Ensure that the appropriate card definitions for the chosen card technology are loaded on the CDC.

2 Mounting the Terminal

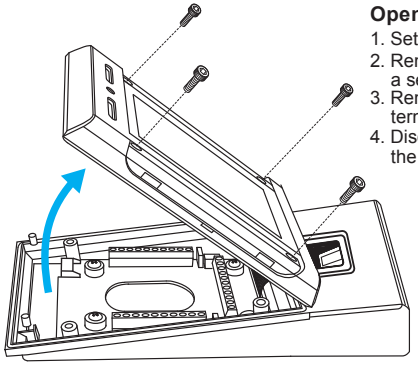

Opening the terminal

1. Set the terminal on a level surface.
2. Remove the four screws using a security hex screwdriver.
3. Remove the front part of the terminal, pivoting at the base.
4. Disconnect the ribbon cable from the I/O board.

Removing the I/O board

1. Remove the four screws and spacers using a star head screwdriver.
2. Lift the I/O board away from the back casing.
3. Drill the cable access holes using the guides on the back casing.
4. Drill the the holes on the terminal casing to match the back box fixture points.

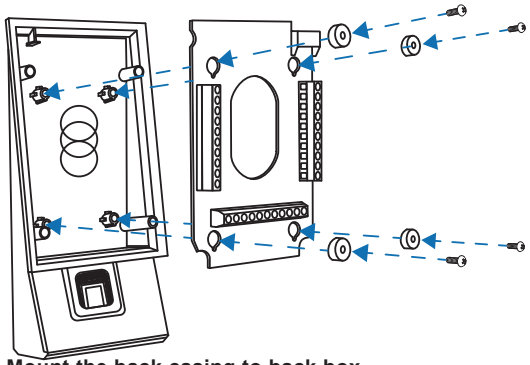

Mount the back casing to back box

1. Using the drilled mounting holes, screw the back casing to the back box.
2. Screw the I/O board to the back casing, ensuring to replace the spacers.

3a Wiring Configuration: emerald Fingerprint Reader + S610s SE + 3rd Party Read Head

WIRING NOTES

When using 24V power for a lock, it is imperative that the switch position is set to EXT. Setting the switch to INT will result in 24V being supplied to the terminal which may cause irreversible damage.

External Power Supply

INT EXT

When the switch is set to EXT a separate DC12 – 24V power source must be used to provide power for any locks or other devices such as sounders attached to the output (J18).

Note: Connect the PSU +ve to J18 pin C on RELAY 1.

Internal Power Supply

INT EXT

When the switch is set to INT, DC12V 650mA is provided to the lock or other devices attached to each output from the terminal's internal power circuitry.

Fail-safe lock

If the terminal loses power a fail-safe lock opens allowing free access. Therefore a lock that is constantly powered, such as a maglock, must be used.

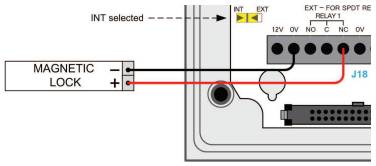

Fail-secure lock

In fail-secure configuration, if the terminal loses power the lock remains closed. A lock that requires power to open such as a mortice lock must be used.

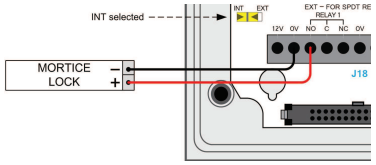

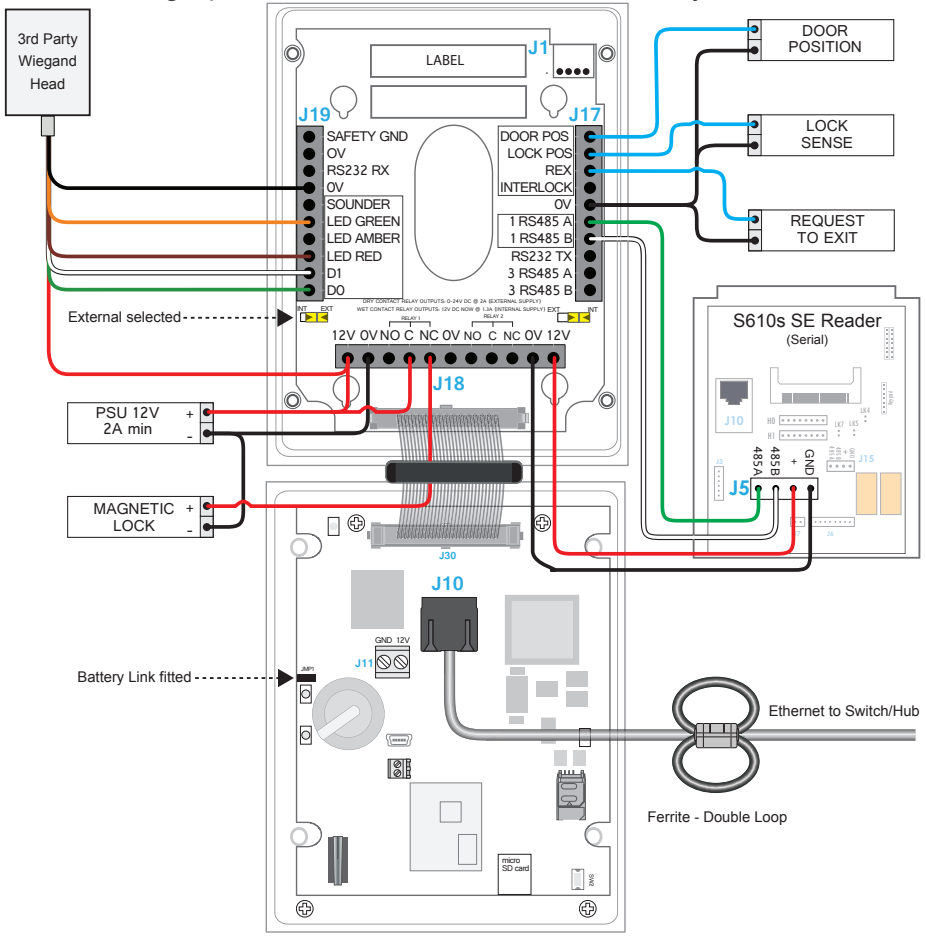

3b Wiring Configuration: emerald TS300f + DIU200 + S610s SE

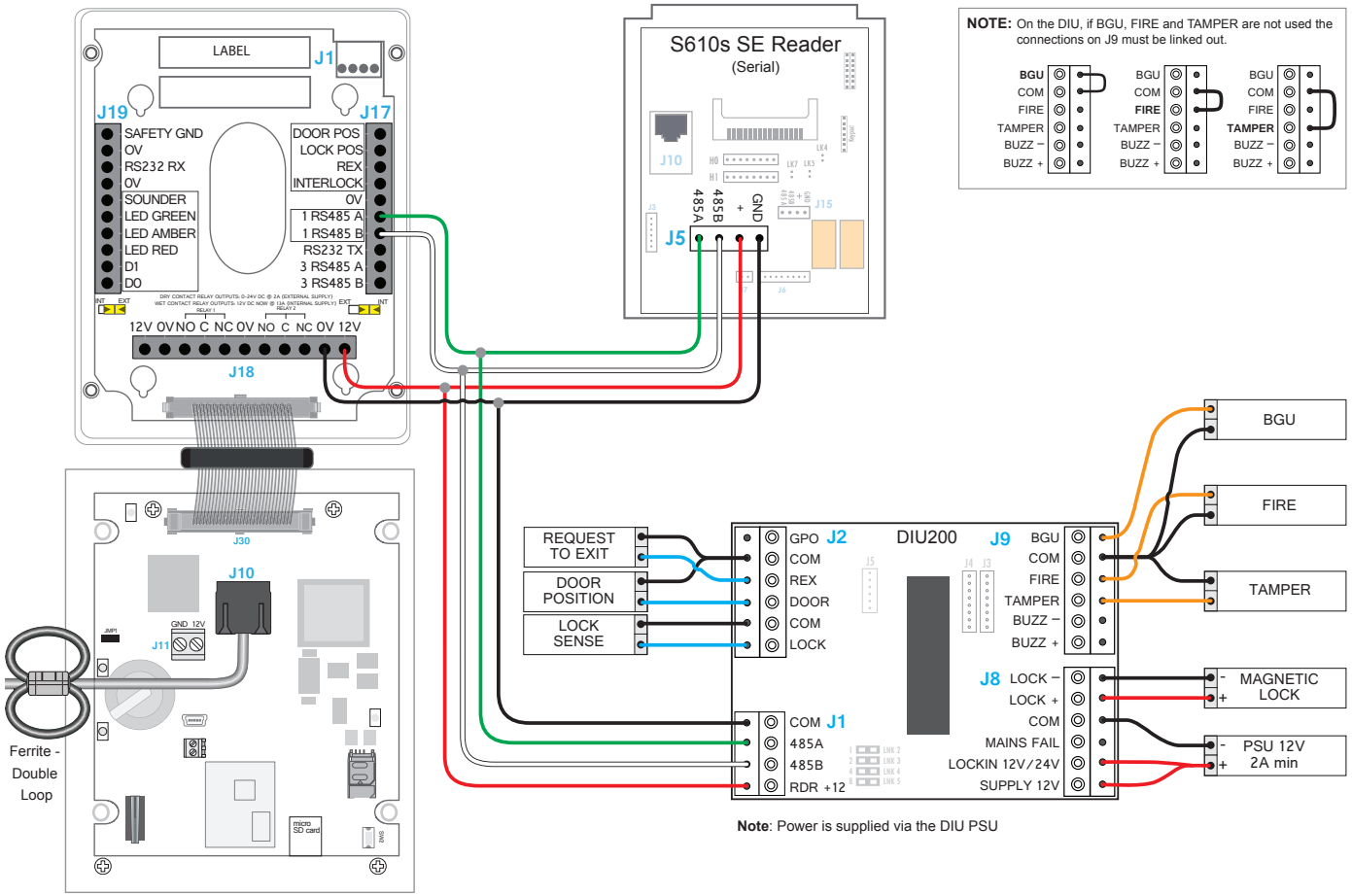

NOTE: On the DIU, if BGU, FIRE and TAMPER are not used the connections on J9 must be linked out.

Note: Power is supplied via the DIU PSU

4 Re-assembling the Terminal

Care should be taken when re-assembling the unit. The front case should not be left hanging from the ribbon cable while attached to the back case.

Ensure there is adequate network cable length to reach the connectors.

1. Connect the ribbon cable to the I/O board.

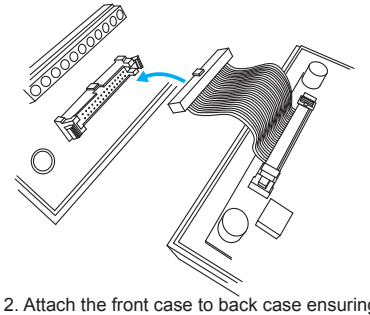

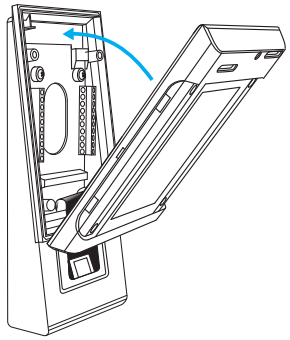

2. Attach the front case to back case ensuring the ribbon cable folds below connector J18.

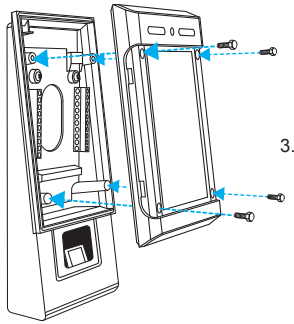

3. Screw the front casing to the back casing using the four security hex screws.

4. Clip the side panels on to each side of the terminal covering each of the mounting screws.

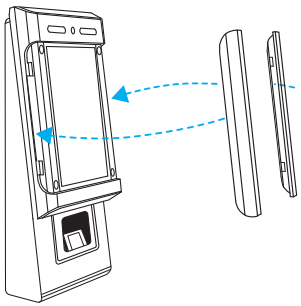

5 Configuring the Network

Setting the terminal IP address, SubNet mask and Gateway

1. On the terminal home screen swipe across the **Date/Time** area from left to right.

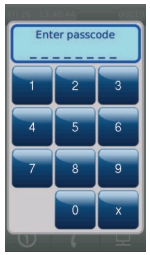

2. Enter the passcode **67679999** to access the **Config Menu**.
   Note: When the terminal has received a configuration from the server the pass code changes to 67670000.
3. Press **Device settings | Network**
4. Select the **IP address field**, enter the address and press **OK**.
5. Press the **SubNet mask field**, enter address and press **OK**.
6. If necessary, select the **Gateway** field, type the address and press OK.
7. Press **Done** to close the Network menu.

Checking Network Status

1. Press and hold the Reader Address to show the network status indicator.

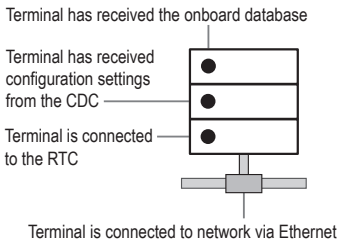

The terminal is now connected to the AC2000 system and ready to use.

Support

For more information on emerald TS300f, consult the following resources.

Datasheets	http://www.cemsys.com/emerald
Installation Manual	http://www.cemsys.com/support
User Guide	http://www.cemsys.com/support

Sales
cem.sales@tycoint.com

Technical Support
Tel: +44 (0)28 90 456656

Safety and Regulatory Information

WARNING This is a class A product. In a domestic environment this product may cause radio interference in which case the user may be required to take adequate measures.

Installation of this device should be performed by a qualified person in accordance to all local regulations. See the emerald Installation Manual for safety information.

Copyright © 2015 Controlled Electronic Management Systems Limited. All rights reserved.
No part of this publication may be produced without the written permission of CEM Systems Limited.

Warnings

Warning

This is a class B product. In a domestic environment this product may cause radio interference in which case the user may be required to take adequate measures

Warning

English

Under Industry Canada regulations, this radio transmitter may only operate using an antenna of a type and maximum (or lesser) gain approved for the transmitter by Industry Canada.

To reduce potential radio interference to other users, the antenna type and its gain should be so chosen that the equivalent isotropically radiated power (e.i.r.p.) is not more than that necessary for successful communication.

This device complies with Industry Canada licence-exempt RSS standard(s). Operation is subject to the following two conditions: (1) this device may not cause interference, and (2) this device must accept any interference, including interference that may cause undesired operation of the device.

Français

Conformément à la réglementation d'Industrie Canada, le présent émetteur radio peut fonctionner avec une antenne d'un type et d'un gain maximal (ou inférieur) approuvé pour l'émetteur par Industrie Canada.

Dans le but de réduire les risques de brouillage radioélectrique à l'intention des autres utilisateurs, il faut choisir le type d'antenne et son gain de sorte que la puissance isotrope rayonnée équivalente (p.i.r.e.) ne dépasse pas l'intensité nécessaire à l'établissement d'une communication satisfaisante.

Le présent appareil est conforme aux CNR d'Industrie Canada applicables aux appareils radio exempts de licence. L'exploitation est autorisée aux deux conditions suivantes : (1) l'appareil ne doit pas produire de brouillage, et (2) l'utilisateur de l'appareil doit accepter tout brouillage radioélectrique subi, même si le brouillage est susceptible d'en compromettre le fonctionnement.

Warning - For FCC Labelled emerald Terminals

This device complies with Part 15 of the FCC rules. Operation is subject to the following two conditions:
(1) This device may not cause harmful interference, and
(2) This device must accept an interference received, including interference that may cause undesired operation.

This equipment complies with FCC radiation exposure limits set forth for an uncontrolled environment. End users must follow the specific operating instructions for satisfying RF exposure compliance. This transmitter must not be co-located or operating in conjunction with any other antenna or transmitter.

Changes or modifications not expressly approved by the party responsible for compliance could void the user's authority to operate the equipment.

Installation of this device shall be performed by a qualified person in accordance to all local regulations.

This system must be installed within the protected premise in accordance with the National Electrical Code (NFPA70), and the local authorities having jurisdiction.

Equipment changes or modifications without the approval of the party responsible for compliance could void the user's authority to operate the equipment and could create a hazardous condition.

CEM emerald Intelligent Fingerprint Terminal product codes

CARD READ TECHNOLOGY	TS100F	TS200F	TS300F	FCC ID NUMBER IC ID NUMBER
Mifare CSN	TSR/100/115	TSR/200/115	TSR/300/115	QABTSR618V93F 12009A-TSR618V93F
Picopass	TSR/100/116	TSR/200/116	TSR/300/116	QABTSR618V93F 12009A-TSR618V93F
CEM DESFire	TSR/100/117	TSR/200/117	TSR/300/117	QABTSR618V93F 12009A-TSR618V93F
iClass & iClass SE	TSR/100/118	TSR/200/118	TSR/300/118	QABTSR618V93F 12009A-TSR618V93F
multi smart card reader	TSR/100/618	TSR/200/618	TSR/300/618	QABTSR618V93F 12009A-TSR618V93F

Note: The typical read range for the integrated 13.56MHz read-head is 3 – 5cm (1.2” – 2”)

Supported card technologies

The emerald Intelligent Fingerprint Terminal multi smart card reader supports the following card technologies:

- CEM DESFire
- MIFARE CSN
- iClass