EMI TEST REPORT

Test Report No. : 22IE0004-YW-1

Applicant:	**Murata Machinery, Ltd.**
Type of Equipment:	**Mobile Modem of Wireless Communication System**
Model No.:	**MVM-19201A** **(Wireless Communication System : DVM-192)**
FCC ID:	**QBOMVM192**
Test standard:	**FCC Part 15 Subpart C §15.209**
Test Result:	**Complied**

1. This test report shall not be reproduced in full or partial, without the written approval of A-Pex International Co., Ltd.
2. The results in this report apply only to the sample tested.
3. This equipment is in compliance with above regulation. We hereby certify that the data contains a true representation of the EMC profile.
4. The test results in this report are traceable to the national or international standards.
5. This test report does not constitute an endorsement by NIST/NVLAP or U.S. Government.

Date of test: June 8, 2002

Tested by: _____
Naoki Sakamoto
Group Leader of EMC Section

Approved by: _____
Kazutoyo Nakanishi
Site Operation Manager of EMC section

A-pex International Co., Ltd.
YOKOWA LAB.
108 Yokowa-cho, Ise-shi, Mie-ken 516-1106 JAPAN
Telephone: int +81 596 39 1485
Facsimile: int +81 596 39 0232

CONTENTS

		PAGE
SECTION 1:	**Client information**	**3**
SECTION 2:	**Equipment under test (E.U.T.)**	**3**
SECTION 3:	**Test specification, methods & procedures**	**5**
SECTION 4:	**Operation of E.U.T. during testing**	**6**
SECTION 5:	**Summary of test results**	**8**
SECTION 6:	**Radiated emission**	**9**
APPENDIX 1:	**Photographs of test setup**	**10**
APPENDIX 2:	**Test instruments**	**10**
APPENDIX 3:	**Data of EMI test**	**10**

SECTION 1: Client information

Company name	:	Murata Machinery, Ltd.
Address	:	2 Nakajima, Hashizume, Inuyama-shi, Aichi 484-8502 Japan
Telephone Number	:	+81-568-65-3278
Facsimile Number	:	+81-568-65-3239
Contact Person	:	Yoshihiro Kataoka

SECTION 2: Equipment under test (E.U.T.)

2.1 Identification of E.U.T.

Type of Equipment	:	Mobile Modem of Wireless Communication System
Model No.	:	MVM-19201A (Wireless Communication System : DVM-192)
Serial No.	:	13061-03
Condition of EUT	:	Production model
Rating	:	DC 5V
Country of Manufacture	:	Japan
Receipt Date of Sample	:	June 8, 2002

2.2 Product Description

Model: MVM-19201A (referred to as the EUT in this report) is a Mobile Modem of Wireless Communication System.

The specification is as follows;

MVM-19201A (Mobile Modem)

Microcomputer's clock	: 3.58MHz
RF circuit's oscillator	: 6.8111MHz, 10.245MHz, 12.8MHz, 211.35MHz
Carrier Frequency	: 150.15MHz to 150.75MHz (100kHz step)
Number of Channels	: 7 channels
Modulation	: FSK (F2D)
Antenna Type	: Resonance antenna
Output	: -30dBm

SECTION 3: Test specification, methods & procedures

3.1 Test Specification

Test Specification : FCC Part 15 Subpart C Section 15.209

Title : FCC 47CFR Part15 Radio Frequency Device Subpart C Intentional Radiators Section 15.209 Radiated emission limits; general requirements

3.2 Methods & Procedures

No.	Item	Test Procedure	Specification	Remarks
1	Radiated emission	ANSI C63.4:2000	Section 15.209(a)	3m

3.3 Additions or deviations to standards

No addition, deviation or exclusion has been made from standards.

SECTION 4: Operation of E.U.T. during testing

4.1 Operating Modes

The EUT exercise program used during radiated and conducted testing was designed to exercise the various system components in a manner similar to typical use.

The operating mode/system were as follows:

Operation: Transmitting

Mobile modem CH1: 150.15MHz (Low)
CH4: 150.45MHz (Mid)
CH7: 150.75MHz (High)
Transmitting continuously.
Modulated by RS232C control at 19.2kbps continuously.

.

Justification: The system was configured in typical fashion (as a customer would normally use it) for testing.

4.2 Configuration and peripherals

Mobile modem

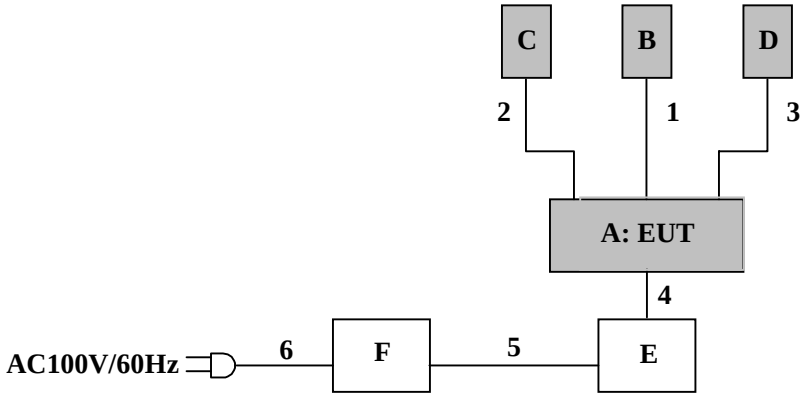

*Cabling was taken into consideration and test data was taken under worse case conditions.

Description of EUT and Support equipment

No.	Item	Model number	Serial number	Manufacturer	FCC ID
A	Mobile Modem	MVM-19201A	13061-03	Sankyo Tokushu Musen Co., Ltd.	EUT
B	Transmit Antenna	ANT-MVMT	-	Sankyo Tokushu Musen Co., Ltd.	EUT
C	Receive Antenna-A	ANT-MVMR	-	Sankyo Tokushu Musen Co., Ltd.	EUT
D	Receive Antenna-B	ANT-MVMR	-	Sankyo Tokushu Musen Co., Ltd.	EUT
E	EUT Controller	-	-	Murata Machinery Ltd.	-
F	Regulated Power Supply	PAB18-3A	11302522	Kikusui	-

* B, C and D are provided with A on the test.

List of cables used

No.	Name	Length (m)	Shield	Backshell Material	Remark
1	Transmit Antenna Cable	1.0	Y	Polyethylene	-
2	Receive Antenna Cable-A	1.0	Y	Polyethylene	-
3	Receive Antenna Cable-B	1.0	Y	Polyethylene	-
4	Control Cable	0.1	N	Vinyl chloride	-
5	DC Power Cable	0.9	N	Vinyl chloride	-
6	AC Power Cable	2.3	N	Vinyl chloride	-

SECTION 5: Summary of test results

5.1 Test results

No.	Item	Test Procedure	Specification	Worst margin	Result
1	Radiated emission	ANSI C63.4:2000	Section 15.209(a)	**Mobile Modem** 5.2dB (150.15MHz: Horizontal) : CH1 4.8dB (150.45MHz: Horizontal) : CH4 4.1dB (150.75MHz: Horizontal) : CH7	Complied

A-PEX INTERNATIONAL hereby confirms that E.U.T., in the configuration tested, complies with the specifications FCC Part 15 Subpart C Section 15.209.

<–20dB Bandwidth>
Refer to Appendix 3.

5.2 Uncertainty

Radiated Emission Test
The measurement uncertainty (with a 95% confidence level) for this test using Biconical antenna is ±4.4dB.
The measurement uncertainty (with a 95% confidence level) for this test using Logperiodic antenna is ±4.8dB.
The measurement uncertainty (with a 95% confidence level) for this test using Horn antenna is ±5.8dB.

The data listed in this test report may exceed the test limit because it does not have enough margin.

5.3 Test Location

A-PEX International Co.,Ltd. Yokowa No.2 test site
108 Yokowa-cho, Ise-shi, Mie-ken 516-1106 Japan
Telephone number : +81-596-39-1485
Facsimile number : +81-596-39-0232
No.2 test site has been fully described in a report submitted to FCC office, and listed on October 26, 2000 (Registration number: 90411).

*NVLAP Lab. code : 200109-0

5.4 Photographs of test setup

Refer to Appendix 1.

5.5 Test instruments

Refer to Appendix 2.

5.6 Data of EMI Test

Refer to Appendix 3.

SECTION 6: Radiated emission

6.1 Operating environment

The test was carried out in an open site.

Temperature : See data
Humidity : See data

6.2 Test configuration

EUT was placed on a platform of nominal size, 1m by 1.5m, raised 80cm above the conducting ground plane.
The rear of EUT, including peripherals was aligned and flush with rear of tabletop. I/O cables that were connected to the peripherals were bundled in center. They were folded back and forth forming a bundle 30cm to 40cm long and were hanged 40cm height to the ground plane. Test was made with the antenna positioned in both the horizontal and vertical planes of polarization. The measurement antenna was varied in height above the conducting ground plane to obtain the maximum signal strength.
A drawing of the set up is shown in the photos of Appendix 1.

6.3 Test conditions

Frequency range : 30MHz - 300MHz (Biconical Antenna) / 300MHz - 1000MHz (Logperiodic antenna) / 1GHz – 2GHz (Horn antenna)
Test distance : 3m
EUT position : Table top

6.4 Test procedure

The Radiated Electric Field Strength intensity has been measured on an open test site with a ground plane and at a distance of 3m.
Pre check measurements were performed at high-level of 80-90MHz, 270-290MHz and 500-700MHz in a screened room. Otherwise the noise from EUT might have been concealed by the ambient noise.
Measurements were performed with quasi-peak and peak detector.
The measuring antenna height was varied between 1 to 4m and EUT was rotated a full revolution in order to obtain the maximum value of the electric field intensity.
The measurements were performed for both vertical and horizontal antenna polarization.
The EUT was put into operation at Transmitting mode.
The radiated emission measurements were made with the following detector function of the test receiver and spectrum analyzer.

Frequency : 30MHz- 1000MHz
Detector Type : QP (Test Receiver)
IF Bandwidth : 120kHz

Frequency : 1GHz- 2GHz
Detector Type : PK and AV (Spectrum Analyzer)
IF Bandwidth : RBW: 1MHz, VBW: 1MHz (AV Limit)

6.5 Results

Summary of the test results: Pass
Date: June 8, 2002 Tested by: Naoki Sakamoto

APPENDIX 1: Photographs of test setup

Page 11: Radiated emission

APPENDIX 2: Test instruments

Page 12: Test instruments

APPENDIX 3: Data of EMI test

Page 13-18: Radiated Spurious emission (30MHz-2000MHz): Mobile Modem

Page 19: –20dB Bandwidth : Mobile Modem

Radiated emission

Mobile Modem

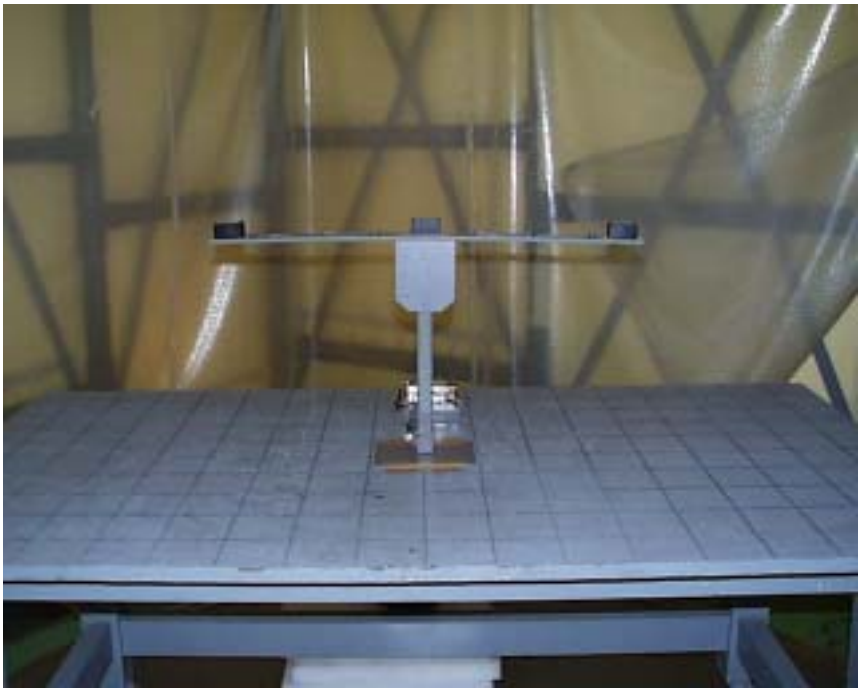

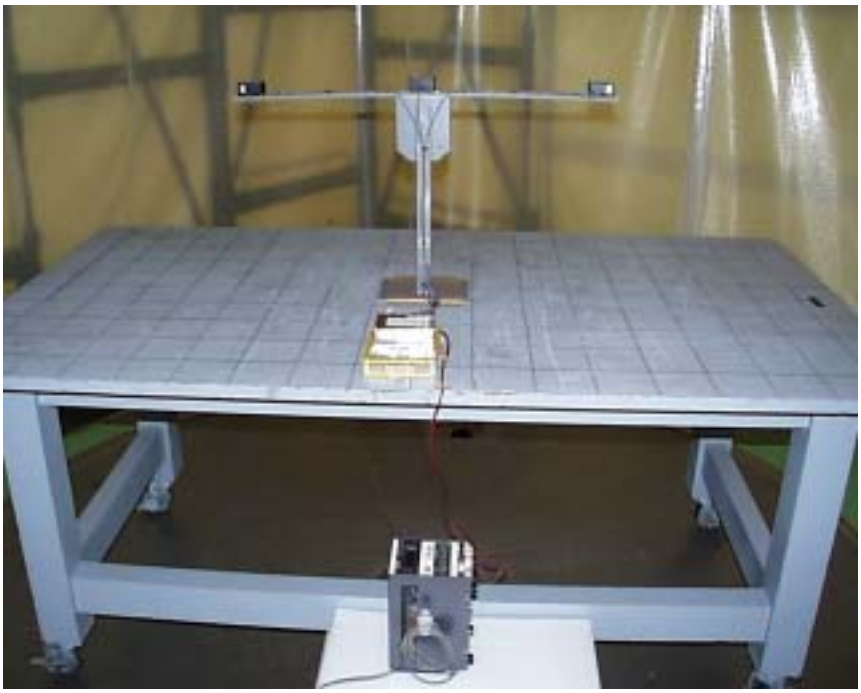

Test Report No :22IE0004-YW-1

APPENDIX 3
Test Instruments

EMI test equipment

Control No.	Instrument	Manufacturer	Model No.	Test Item	Calibration Date * Interval(month)
AF-03	Pre Amplifier	Anritsu	MH648A	RE	2002/04/01 * 12
AT-04	Attenuator	Anritsu	MP721B	RE	2002/04/04 * 12
BA-04	Biconical Antenna	Schwarzbeck	BBA9106	RE	2002/04/27 * 12
LA-05	Logperiodic Antenna	Schwarzbeck	UHALP9108-A	RE	2001/11/17 * 12
SA-03	Spectrum Analyzer	Hewlett Packard	8567A	RE	2002/04/03 * 12
SA-06	Spectrum Analyzer	Advantest	R3273	RE	2001/11/20 * 12
TR-04	Test Receiver	Rohde & Schwarz	ESVS10	RE	2002/05/01 * 12
AF-06	Pre Amplifier	Agilent	HP8449B	RE	2001/12/21 * 12
HA-01	Horn Antenna	A.H.Systems	SAS-200/571	RE	2002/05/07 * 12
YOATS-02	Open Test Site	JSE	10m	RE	2002/03/17 * 12

All equipment is calibrated with traceable calibrations. Each calibration is traceable to the national or international standards.

Test Item:

CE: Conducted emission,
RE: Radiated emission,
H/F: Harmonics and voltage fluctuation
RFI: RFI Power test,
AT: Antenna terminal disturbance voltage

DATA OF RADIATION TEST

A-PEX INTERNATIONAL CO., LTD.
YOKOWA No.2 OPEN TEST SITE
Report No. : 221E0004-YW-1

Applicant : Murata Machinery Limited.
Kind of Equipment : WIRELESS COMMUNICATION SYSTEM
Model No. : MVM-19201A
Serial No. : 13061-03
Power : DC5V
Mode : Ch1 : 150.15MHz
Remarks : -
Date : 6/8/2002
Test Distance : 3 m
Temperature : 28 ℃
Humidity : 39 %
Regulation : Fcc 15C §15.209(a)

Engineer : Naoki Sakamoto

No.	FREQ. [MHz]	ANT TYPE	READING HOR [dBμV]	READING VER [dBμV]	ANT FACTOR [dB/m]	AMP GAIN [dB]	CABLE LOSS [dB]	ATTEN. [dB]	RESULT HOR [dBμV/m]	RESULT VER [dBμV/m]	LIMITS [dBμV/m]	MARGIN HOR [dB]	MARGIN VER [dB]
1.	150.15	BB	44.2	42.9	15.0	29.7	2.8	6.0	38.3	37.0	43.5	5.2	6.5
2.	300.30	BB	33.6	29.5	13.5	29.9	4.1	6.1	27.4	23.3	46.0	18.6	22.7
3.	334.06	BB	37.4	31.2	14.2	30.1	4.4	6.1	32.0	25.8	46.0	14.0	20.2
4.	367.83	BB	40.3	33.1	14.9	30.2	4.7	6.1	35.8	28.6	46.0	10.2	17.4
5.	422.91	BB	36.6	31.4	16.0	30.2	5.0	6.1	33.5	28.3	46.0	12.5	17.7
6.	450.46	BB	29.2	25.2	16.7	30.2	5.3	6.1	27.1	23.1	46.0	18.9	22.9
7.	600.60	BB	26.1	25.6	19.1	30.1	6.1	6.1	27.3	26.8	46.0	18.7	19.2
8.	634.36	BB	35.5	33.9	19.8	30.1	6.4	6.1	37.7	36.1	46.0	8.3	9.9
9.	750.75	BB	25.0	25.0	21.2	30.5	7.2	6.1	29.0	29.0	46.0	17.0	17.0
10.	845.79	BB	29.3	30.1	21.6	29.5	7.7	6.1	35.2	36.0	46.0	10.8	10.0
11.	900.94	BB	27.9	28.3	22.1	29.2	8.1	6.0	34.9	35.3	46.0	11.1	10.7

CALCULATION: READING[dBμV] + ANT.FACTOR[dB/m] + CABLE LOSS[dB] - AMP.GAIN[dB] + ATTEN[dB].

All other spurious emissions are more than 20dB below the limits.

DATA OF RADIATION TEST

A-PEX INTERNATIONAL CO., LTD.
YOKOWA No.2 OPEN TEST SITE
Report No. : 221E0004-YW-1

Applicant : Murata Machinery Limited.
Kind of Equipment : WIRELESS COMMUNICATION SYSTEM
Model No. : MVM-19201A
Serial No. : 13061-03
Power : DC5V
Mode : Ch4 : 150.45MHz
Remarks : -
Date : 6/8/2002
Test Distance : 3 m
Temperature : 28 ℃
Humidity : 39 %
Regulation : Fcc 15C §15.209(a)

Engineer : Naoki Sakamoto

No.	FREQ. [MHz]	ANT TYPE	READING HOR [dBμV]	READING VER [dBμV]	ANT FACTOR [dB/m]	AMP GAIN [dB]	CABLE LOSS [dB]	ATTEN. [dB]	RESULT HOR [dBμV/m]	RESULT VER [dBμV/m]	LIMITS [dBμV/m]	MARGIN HOR [dB]	MARGIN VER [dB]
1.	150.46	BB	44.6	43.3	15.0	29.7	2.8	6.0	38.7	37.4	43.5	4.8	6.1
2.	300.92	BB	33.0	29.1	13.5	29.9	4.1	6.1	26.8	22.9	46.0	19.2	23.1
3.	334.33	BB	37.2	31.5	14.2	30.1	4.4	6.1	31.8	26.1	46.0	14.2	19.9
4.	367.75	BB	41.3	33.6	14.9	30.2	4.7	6.1	36.8	29.1	46.0	9.2	16.9
5.	423.49	BB	37.1	31.7	16.0	30.2	5.0	6.1	34.0	28.6	46.0	12.0	17.4
6.	451.26	BB	27.0	25.1	16.7	30.2	5.3	6.1	24.9	23.0	46.0	21.1	23.0
7.	601.79	BB	28.6	26.0	19.1	30.1	6.1	6.1	29.8	27.2	46.0	16.2	18.8
8.	635.26	BB	33.3	33.1	19.8	30.1	6.4	6.1	35.5	35.3	46.0	10.5	10.7
9.	752.30	BB	26.2	25.1	21.2	30.4	7.2	6.1	30.3	29.2	46.0	15.7	16.8
10.	847.02	BB	29.4	30.3	21.6	29.5	7.7	6.1	35.3	36.2	46.0	10.7	9.8
11.	902.67	BB	28.7	29.5	22.1	29.2	8.1	6.0	35.7	36.5	46.0	10.3	9.5

CALCULATION: READING[dBμV] + ANT.FACTOR[dB/m] + CABLE LOSS[dB] - AMP.GAIN[dB] + ATTEN[dB].

All other spurious emissions are more than 20dB below the limits.

DATA OF RADIATION TEST

A-PEX INTERNATIONAL CO., LTD.
YOKOWA No.2 OPEN TEST SITE
Report No. : 221E0004-YW-1

Applicant : Murata Machinery Limited.
Kind of Equipment : WIRELESS COMMUNICATION SYSTEM
Model No. : MVM-19201A
Serial No. : 13061-03
Power : DC5V
Mode : Ch7 : 150.75MHz
Remarks : -
Date : 6/8/2002
Test Distance : 3 m
Temperature : 28 ℃
Humidity : 39 %
Regulation : Fcc 15C §15.209(a)

Engineer : Naoki Sakamoto

No.	FREQ. [MHz]	ANT TYPE	READING HOR [dBμV]	READING VER [dBμV]	ANT FACTOR [dB/m]	AMP GAIN [dB]	CABLE LOSS [dB]	ATTEN. [dB]	RESULT HOR [dBμV/m]	RESULT VER [dBμV/m]	LIMITS [dBμV/m]	MARGIN HOR [dB]	MARGIN VER [dB]
1.	150.75	BB	45.3	43.7	15.0	29.7	2.8	6.0	39.4	37.8	43.5	4.1	5.7
2.	301.50	BB	33.2	30.0	13.5	29.9	4.1	6.1	27.0	23.8	46.0	19.0	22.2
3.	334.65	BB	36.6	31.2	14.2	30.1	4.4	6.1	31.2	25.8	46.0	14.8	20.2
4.	367.86	BB	41.1	34.4	14.9	30.2	4.7	6.1	36.6	29.9	46.0	9.4	16.1
5.	424.10	BB	37.6	32.2	16.1	30.2	5.0	6.1	34.6	29.2	46.0	11.4	16.8
6.	452.25	BB	29.1	25.4	16.7	30.2	5.3	6.1	27.0	23.3	46.0	19.0	22.7
7.	603.02	BB	27.7	26.1	19.2	30.1	6.2	6.1	29.1	27.5	46.0	16.9	18.5
8.	636.16	BB	34.6	33.8	19.9	30.1	6.4	6.1	36.9	36.1	46.0	9.1	9.9
9.	753.71	BB	27.1	26.5	21.2	30.4	7.2	6.1	31.2	30.6	46.0	14.8	15.4
10.	848.22	BB	29.6	31.0	21.6	29.4	7.7	6.1	35.6	37.0	46.0	10.4	9.0
11.	904.55	BB	29.1	29.8	22.2	29.2	8.1	6.0	36.2	36.9	46.0	9.8	9.1

CALCULATION: READING[dBμV] + ANT.FACTOR[dB/m] + CABLE LOSS[dB] - AMP.GAIN[dB] + ATTEN[dB].

All other spurious emissions are more than 20dB below the limits.

DATA OF RADIATION TEST

A-PEX INTERNATIONAL CO., LTD.
YOKOWA No.2 OPEN TEST SITE
Report No. : 221E0004-YW-1

Applicant : Murata Machinery Limited.
Kind of Equipment : WIRELESS COMMUNICATION SYSTEM
Model No. : MVM-19201A
Serial No. : 13061-03
Power : DC5V
Mode : Ch1 : 150.15MHz
Remarks : 1-2GHz(SA: RBW and VBW 1MHz)
Date : 6/8/2002
Test Distance : 3 m
Temperature : 24 ℃
Humidity : 41 %
Regulation : FCC Part 15 Subpart C Section 15.209 (Average Limit / Upper 1GHz)

Engineer : Naoki Sakamoto

No.	FREQ. [MHz]	ANT TYPE	READING HOR [dBμV]	READING VER [dBμV]	ANT FACTOR [dB/m]	AMP GAIN [dB]	CABLE LOSS [dB]	ATTEN. [dB]	RESULT HOR [dBμV/m]	RESULT VER [dBμV/m]	LIMITS [dBμV/m]	MARGIN HOR [dB]	MARGIN VER [dB]
1.	1051.05	BB	45.8	46.1	25.0	38.6	1.5	0.0	33.7	34.0	54.0	20.3	20.0
2.	1201.20	BB	45.9	45.7	25.8	38.5	1.6	0.0	34.8	34.6	54.0	19.2	19.4
3.	1351.35	BB	45.6	45.8	26.6	38.3	1.8	0.0	35.7	35.9	54.0	18.3	18.1
4.	1501.50	BB	46.6	46.5	27.4	38.1	1.9	0.0	37.8	37.7	54.0	16.2	16.3

CALCULATION: READING[dBμV] + ANT.FACTOR[dB/m] + CABLE LOSS[dB] - AMP.GAIN[dB] + ATTEN[dB].

All other spurious emissions are more than 20dB below the limits.
ANT.TYPE:1-2GHz DRG Horn

DATA OF RADIATION TEST

A-PEX INTERNATIONAL CO., LTD.
YOKOWA No.2 OPEN TEST SITE
Report No. : 221E0004-YW-1

Applicant : Murata Machinery Limited.
Kind of Equipment : WIRELESS COMMUNICATION SYSTEM
Model No. : MVM-19201A
Serial No. : 13061-03
Power : DC5V
Mode : Ch4 : 150.45MHz
Remarks : 1-2GHz(SA: RBW and VBW 1MHz)
Date : 6/8/2002
Test Distance : 3 m
Temperature : 24 ℃
Humidity : 41 %
Regulation : FCC Part 15 Subpart C Section 15.209 (Average Limit / Upper 1GHz)

Engineer : Naoki Sakamoto

No.	FREQ. [MHz]	ANT TYPE	READING HOR [dBμV]	READING VER [dBμV]	ANT FACTOR [dB/m]	AMP GAIN [dB]	CABLE LOSS [dB]	ATTEN. [dB]	RESULT HOR [dBμV/m]	RESULT VER [dBμV/m]	LIMITS [dBμV/m]	MARGIN HOR [dB]	MARGIN VER [dB]
1.	1053.15	BB	46.0	46.3	25.0	38.6	1.5	0.0	33.9	34.2	54.0	20.1	19.8
2.	1203.60	BB	45.5	46.0	25.8	38.5	1.6	0.0	34.4	34.9	54.0	19.6	19.1
3.	1354.05	BB	45.7	45.5	26.6	38.3	1.8	0.0	35.8	35.6	54.0	18.2	18.4
4.	1504.50	BB	45.5	45.9	27.4	38.1	1.9	0.0	36.7	37.1	54.0	17.3	16.9

CALCULATION: READING[dBμV] + ANT.FACTOR[dB/m] + CABLE LOSS[dB] - AMP.GAIN[dB] + ATTEN[dB].

All other spurious emissions are more than 20dB below the limits.
ANT.TYPE:1-2GHz DRG Horn

DATA OF RADIATION TEST

A-PEX INTERNATIONAL CO., LTD.
YOKOWA No.2 OPEN TEST SITE
Report No. : 221E0004-YW-1

Applicant : Murata Machinery Limited.
Kind of Equipment : WIRELESS COMMUNICATION SYSTEM
Model No. : MVM-19201A
Serial No. : 13061-03
Power : DC5V
Mode : Ch7 : 150.75MHz
Remarks : 1-2GHz(SA: RBW and VBW 1MHz)
Date : 6/8/2002
Test Distance : 3 m
Temperature : 24 ℃
Humidity : 41 %
Regulation : FCC Part 15 Subpart C Section 15.209 (Average Limit / Upper 1GHz)

Engineer : Naoki Sakamoto

No.	FREQ. [MHz]	ANT TYPE	READING HOR [dBμV]	READING VER [dBμV]	ANT FACTOR [dB/m]	AMP GAIN [dB]	CABLE LOSS [dB]	ATTEN. [dB]	RESULT HOR [dBμV/m]	RESULT VER [dBμV/m]	LIMITS [dBμV/m]	MARGIN HOR [dB]	MARGIN VER [dB]
1.	1055.25	BB	46.0	45.9	25.0	38.6	1.5	0.0	33.9	33.8	54.0	20.1	20.2
2.	1206.00	BB	45.6	45.6	25.8	38.5	1.6	0.0	34.5	34.5	54.0	19.5	19.5
3.	1356.75	BB	45.3	45.5	26.6	38.3	1.8	0.0	35.4	35.6	54.0	18.6	18.4
4.	1507.50	BB	45.8	45.6	27.4	38.1	1.9	0.0	37.0	36.8	54.0	17.0	17.2

CALCULATION: READING[dBμV] + ANT.FACTOR[dB/m] + CABLE LOSS[dB] - AMP.GAIN[dB] + ATTEN[dB].

All other spurious emissions are more than 20dB below the limits.
ANT.TYPE:1-2GHz DRG Horn

1. 150.15MHz(Low) **-20dB BW : 64.8kHz**

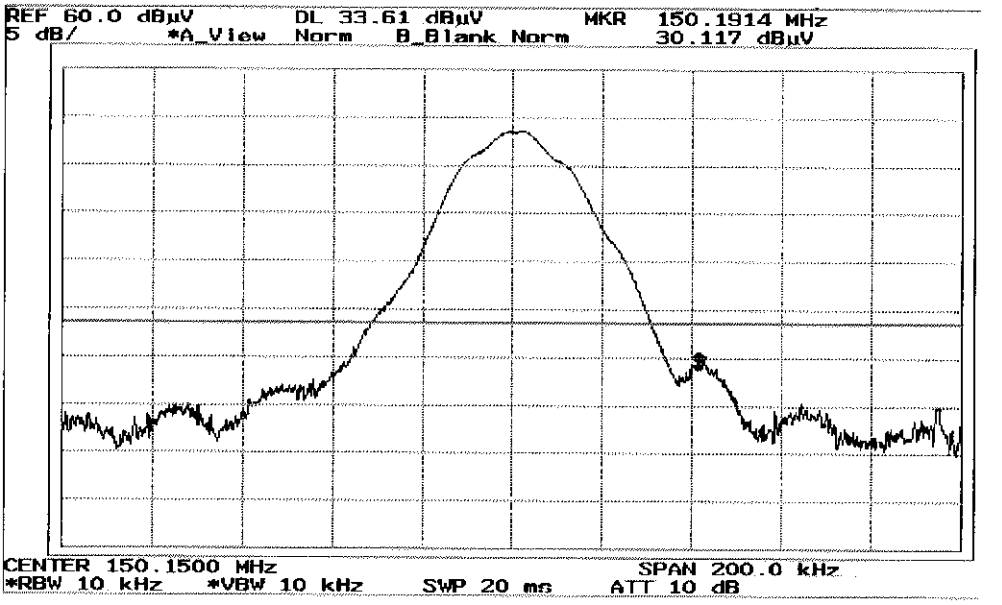

2. 150.45MHz(Mid) **-20dB BW : 63.0kHz**

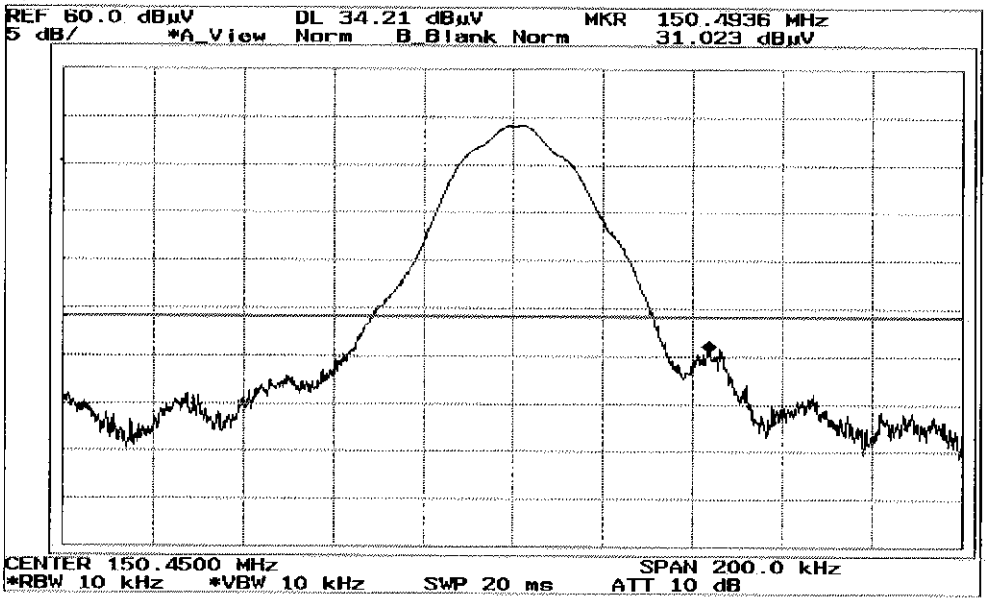
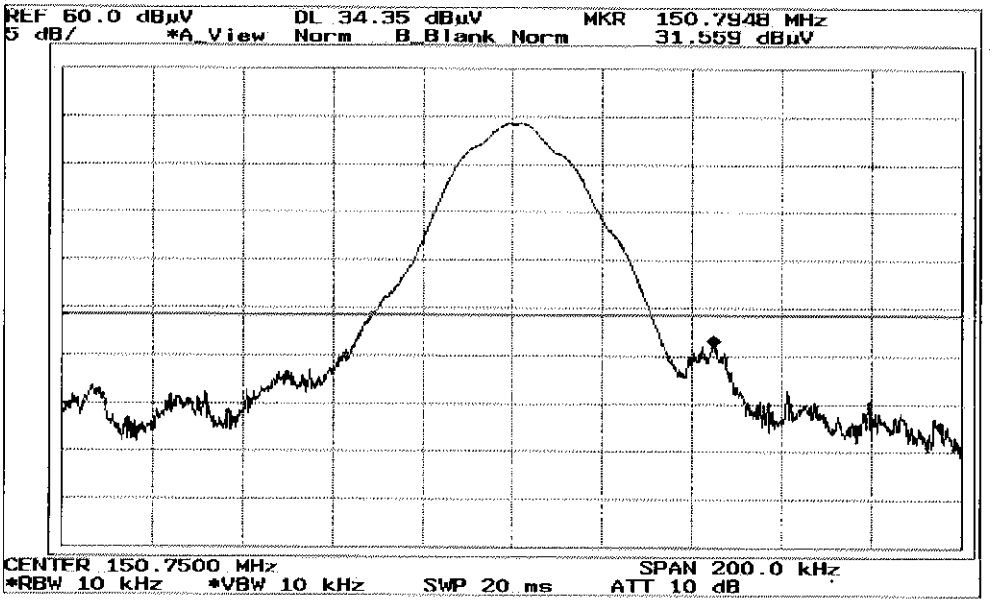
3. 150.75MHz(Hi) **-20dB BW : 64.0kHz**