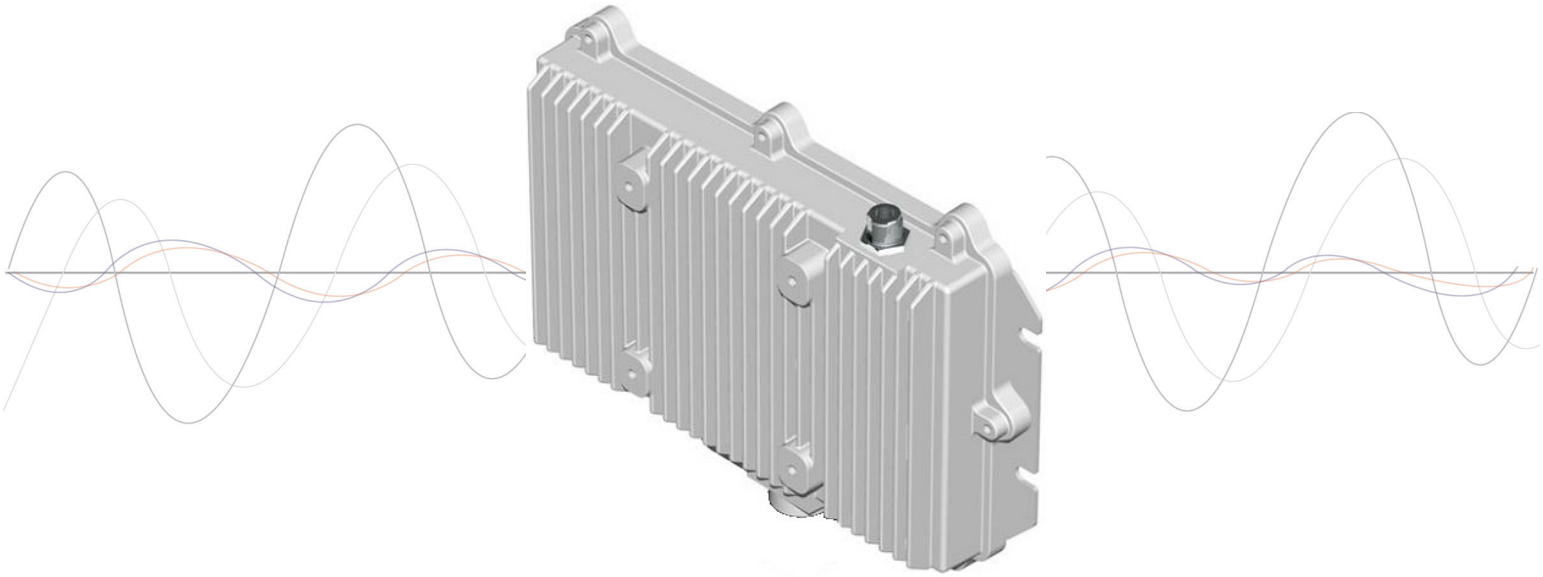

AN-80i PTP System

User Manual

Copyright Information

All rights reserved October 18, 2006. The information in this document is proprietary to Redline Communications Inc. This document may not in whole or in part be copied, reproduced, or reduced to any medium without prior consent, in writing, from Redline Communications Incorporated.

Contact Information	Redline Communications Inc. 302 Town Centre Blvd. Markham, ON Canada L3R 0E8
Web site:	http://www.redlinecommunications.com
Sales Inquiries: North American Toll-free sales line International	 nainfo@redlinecommunications.com 1-866-633-6669 intlinfo@redlinecommunications.com
Support: Email Telephone	 support@redlinecommunications.com Contact your Redline Distributor
Document ID:	70-00072-01-01-AN-80i_User_Manual-20061018b.doc

Disclaimer

The statements, configurations, technical data, and recommendations in this document are believed to be accurate and reliable, but are presented without express or implied warranty. Additionally, Redline makes no representations or warranties, either expressed or implied, regarding the contents of this product. Redline Communications shall not be liable for any misuse regarding this product. The information in this document is subject to change without notice.

TABLE OF CONTENTS

1 Important Safety & Service Notices 7
1.1 Safety Warnings 7
1.2 Important Warning Symbols 8
1.3 Important Service Information 8
1.4 Product Information 8
1.5 Lightning Protection 9
1.6 FCC Notice 10
1.7 UL Information 10
2 System Overview 11
2.1 Ethernet Port 12
2.2 RF Port 12
2.3 Mounting Brackets 12
2.4 Grounding Connection 12
2.5 Antenna Alignment 13
2.6 Indoor Power Block (PoE Power Adapter) 13
3 Web Interface 14
3.1 System Login 14
3.2 System Menu 15
3.3 System Information 16
General 16
Ethernet 17
Wireless 17
3.3.1 System Status 18
General information 18
Ethernet LAN Statistics 19
Wireless Statistics 19
Controls 19
3.4 System Logs Screen 20
3.5 System Configuration Screen 21
General 22
Wireless Configuration 23
Controls 26
3.6 System Password Screen 27
3.7 AN-80i Product Options Screen 29
Entering the Options Key 29
3.8 Upload Software 30
3.9 SNMP Settings Screen 31
3.9.1 Change SNMP Community 32
3.9.2 Change SNMP Trap Configuration 33
3.10 Spectrum Sweep 34
4 CLI Interface 36
4.1 Overview 36
4.1.1 Connecting via Telnet 36
4.1.2 Common Commands 37

4.2 CLI Commands 37
4.2.1 Chgver 38
4.2.2 Get 38
4.2.3 Reboot 38
4.2.4 Reset 39
4.2.5 Save 39
4.2.6 Set 39
4.2.7 Show 42
4.2.8 Snmpcommunity 45
4.2.9 Snmptrap 45
4.2.10 Test 45
4.2.11 Upgrade 46
4.2.12 User 46
5 Diagnostics and Troubleshooting 47
5.1 Factory Default Settings 47
5.2 Procedure to Reset AN-80i IP Address 48
5.2.1 Procedure 48
5.3 Testing and Saving System Parameters 49
Web Interface 49
CLI Interface 49
5.4 Troubleshooting the Web Interface 50
5.5 Status Codes 51
5.6 System Log Messages 52
6 Appendices 55
6.1 System Specifications 55
6.2 Antenna and Power Specifications 56
6.3 Glossary Of Terms 57

LIST OF TABLES

Table 1: Web - RF Channel Range 23
Table 2: Web - Max. Power (in dBm) and Modulation Settings 23
Table 3: Web - Ethernet Status Indication 25
Table 4: Web - Screens and User Access 28
Table 5: Web - Default System Users 28
Table 6: Web - Performing a Spectrum Sweep 35
Table 7: CLI - Root Mode Commands 37
Table 8: CLI - Command Summary 37
Table 9: CLI - chgver 38
Table 10: CLI - get 38
Table 11: CLI - reboot 39
Table 12: CLI - reset 39
Table 13: CLI - save 39
Table 14: CLI - set 39
Table 15: CLI - show 42
Table 16: CLI - snmpcommunity 45
Table 17: CLI - snmptrap 45
Table 18: CLI - test 45
Table 19: CLI - upgrade 46
Table 20: CLI - user 46
Table 21: Diag. - Factory Default Settings 47
Table 22: Diag. - Web Interface Diagnostics 50
Table 23: Diag. - Status Codes 51
Table 24: Diag. - System Log Messages 52
Table 25: Spec. - AN-80i Technical Specifications 55
Table 26: Spec. - AN-80i PoE Specifications 56
Table 27: Spec. - Antenna Power Specifications 56

LIST OF FIGURES

Figure 1: Intro - AN-80i Components 11
Figure 2: Intro - AN-80i with Integrated Antenna 12
Figure 3: Intro - Indoor Power-over-Ethernet (PoE) Module 13
Figure 4: Web - Login Screen 14
Figure 5: Web - System Menu 15
Figure 6: Web - General Information Screen 16
Figure 7: Web - System Log Messages 20
Figure 8: Web - PTP Configuration Screen 21
Figure 9: Web - System Password Screen 27
Figure 10: Web - Product Options Screen 29
Figure 11: Web - Upload Software Screen 30
Figure 12: Web - SNMP Configuration Screen 31
Figure 13: Web - SNMP Add/Change Community Screen 32
Figure 14: Web - SNMP Add/Change Community Screen 33
Figure 15: Web - Spectrum Analyzer Screen 34
Figure 16: CLI - Connecting via Telnet 36
Figure 17: CLI - Recovering Lost IP Address 48
Figure 18: Diag - Saving Parameters in NVRAM 49

Chapter

1

1 Important Safety & Service Notices

1.1 Safety Warnings

1. PoE power adapter caution:

PoE Power adapter Caution

Warning to Service Personnel: 48 VDC

Connecting customer premises Ethernet equipment directly to the 'OUTPUT' connector on the AN-80i Power-over-Ethernet power adapter may damage customer network interface equipment. Customer equipment including personal computers, routers, etc., must only be connected to the 'INPUT' port on the PoE unit. Only the outdoors Ethernet interface cable to the AN-80i can be safely connected to the 'OUTPUT' connector.

2. Installation of the system must be contracted to a professional installer.
3. Read this user manual and follow all operating and safety instructions.
4. Keep all product information for future reference.
5. The power requirements are indicated on the product-marking label. Do not exceed the described limits.
6. Use only a damp cloth for cleaning. Do not use liquid or aerosol cleaners. Disconnect the power before cleaning.
7. Disconnect power when unit is stored for long periods.
8. The AN-80i must not be located near power lines or other electrical power circuits.
9. The system must be properly grounded to protect against power surges and accumulated static electricity. It is the user's responsibility to install this device in accordance with the local electrical codes: correct installation procedures for grounding the AN-80i, mast, lead-in wire and discharge unit, location of discharge unit, size of grounding conductors and connection requirements for grounding electrodes.

1.2 Important Warning Symbols

The following symbols may be encountered during installation or troubleshooting. These warning symbols mean danger. Bodily injury may result if you are not aware of the safety hazards involved in working with electrical equipment and radio transmitters. Familiarize yourself with standard safety practices before continuing.

Electro-Magnetic Radiation

High Voltage

1.3 Important Service Information

1. Refer all repairs to qualified service personnel. Do not remove the covers or modify any part of this device, as this voids the warranty.
2. Locate the serial numbers and record these on your registration card for future reference. Use the space below to affix serial number stickers. Also, record the MAC address located on the AN-80i.

1.4 Product Information

Use the following table to record important system information:

Product Information	
AN-80i SN: _____	MAC Address_____
PoE SN: _____	Model #: _____
Antenna Model No.: _____	Antenna SN: _____
Serial Number Stickers	

1.5 Lightning Protection

WARNING: The following notes are general recommendations for the system. The wireless equipment should be installed by a qualified professional installer who must follow local and national codes for electrical grounding and safety. Failure to meet safety requirements and/or use of non-standard practices and procedures could result in personal injury and damage to equipment. A direct lightning strike may cause serious damage even if these guidelines are followed.

All outdoor wireless equipment is susceptible to lightning damage from a direct hit or induced current from a near strike. Lightning protection and grounding practices in local and national electrical codes serve to minimize equipment damage, service outages, and serious injury. Reasons for lightning damage are summarized as:

a) Poorly grounded antenna sites that can conduct high lightning strike energy into equipment.

b) Lack of properly installed lightning protection equipment that can cause equipment failures from lightning induced currents.

A lighting protection system provides a means by which the energy may enter earth without passing through and damaging parts of a structure. A lightning protection system does not prevent lightning from striking; it provides a means for controlling it and preventing damage by providing a low resistance path for the discharge of energy to travel safely to ground. Improperly grounded connections are also a source of noise that can cause sensitive equipment to malfunction.

A good grounding system disperses most of the surge energy from a lightning strike away from the building and equipment. The remaining energy on the Ethernet cable shield and center conductor can be directed safely to ground by using a lightning arrestor in series with the cable.

If you have determined that it is appropriate to install lightning protection for your system, the following general industry practices are provided as a guideline only:

1. The AC wall outlet ground for the indoor POE adapter should be connected to the building grounding system. as the AN-80i lightning protectors.
2. Install a lightning arrestor in series with the Ethernet cable at the point of entry to the building. The grounding wire should be connected to the same termination point used for the tower or mast.
3. Install a lightning arrestor in series with the Ethernet cable as close to the AN-80i as practical. The grounding wire should be connected to the same termination point used for the tower or mast.
4. Provide direct grounding from the AN-80i, the mounting bracket, the antenna, and the Ethernet cable surge protection to the same ground bus on the building. Use the grounding screws provided for terminating the ground wires.

1.6 FCC Notice

1. The Model AN-80i is only used for Point to Point application
2. The Model AN-80i and it's antenna must be professionally installed
3. FCC & IC RX Exposure Warnings as below:

   ⚠WARNING: To satisfy FCC and IC RF exposure requirements for RF transmitting devices, a separation distance of 3.1 meters or more should be maintained between the antenna of this device and persons during device operation. To ensure compliance, operations at closer than this distance is not recommended.

   The antenna used for this transmitter must not be collocated in conjunction with any other antenna or transmitter.
4. The Model AN-80i and antenna are required to be professionally installed.
5. FCC Information to Users @ FCC 15.21 & 15.105:

   This equipment has been tested and found to comply with the limits for a Class A digital device, pursuant to Part 15 of the FCC Rules. These limits are designed to provide reasonable protection against harmful interference when the equipment is operated in a commercial environment. This equipment generates, uses, and can radiate radio frequency energy and, if not installed and used in accordance with the instruction manual, may cause harmful interference to radio communications.
6. Warning: Changes or modifications not expressly approved by Redline Communications could void the user's authority to operate the equipment.

1.7 UL Information

1. The suitability of the supplied Ethernet cable is subject to the approval of Authority Having Jurisdiction and must comply with the local electrical code.
2. The equipment must be properly grounded according with NEC and other local safety code and building code requirements
3. To meet the over-voltage safety requirements on the telecommunications cables, a minimum 26 AWG telecommunication line cord must be used.
4. "Pour être en conformance avec les exigences finies de sûreté de sur-tension sur les câbles de télécommunications un fil de télécommunication ayant un caliber minimum de 26 AWG doit être utilisé."
5. Reminder to all the BWA system installers: Attention to Section 820-40 of the NEC which provides guidelines for proper grounding and, in particular, specifies that the cable ground shall be connected to the grounding system of the building, as close to the point of cable entry as is practical.
6. AN-80i must be installed in compliance with relevant articles in National Electrical Code-NEC (and equivalent Canadian Code-CEC) including referenced articles 725, 800 and 810 in NEC.
7. RF coaxial cable connecting an antenna to AN-80i must comply with the local electrical code.

Chapter

2

2 System Overview

The Access Node 80i system is manufactured by Redline Communications -- a world leader in design and production of Broadband Fixed Wireless (BFW) systems.

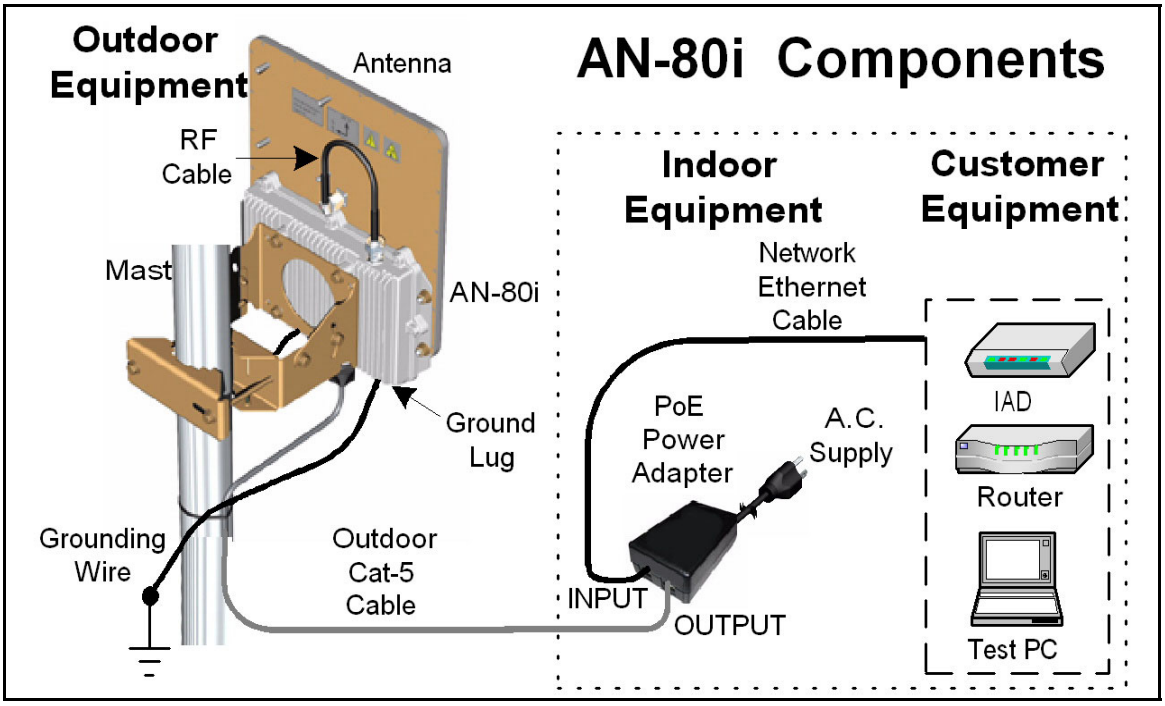

Figure 1: **Intro - AN-80i Components**

The AN-80i is a high-performance, high-speed wireless Ethernet bridge for use in a commercial, industrial, business, or government environment. The system operates in the 5.8 GHz band using a time division duplexing (TDD) RF transceiver to transmit and receive on the same RF channel. AN-80i features include: advanced technologies to address inter-cell interference, enhanced security features through a proprietary over-the-air encryption scheme, and Automatic Transmitter Power Control (ATPC) to automatically achieve and maintain optimum performance.

The AN-80i outdoor unit is housed in a weatherproof aluminum alloy case. The outdoor unit can be used with a selection of available external antennas. When equipped with a narrow beam antenna, the AN-80i supports long-range operations of over 50 miles (80 km) in clear line of sight (LOS) conditions. An indoor PoE power adapter provides operational power for the AN-80i and connection to the Ethernet network.

Each wireless link requires two AN-80i units. One AN-80i is configured as the PTP Master and controls the wireless link; this function is transparent to all Ethernet operations. The master AN-80i uses a scheduled request/grant mechanism to arbitrate requests for bandwidth from the remote unit -- providing non contention-based traffic with predictable transmission characteristics. The second AN-80i operates as a PTP Slave under control of the master unit.

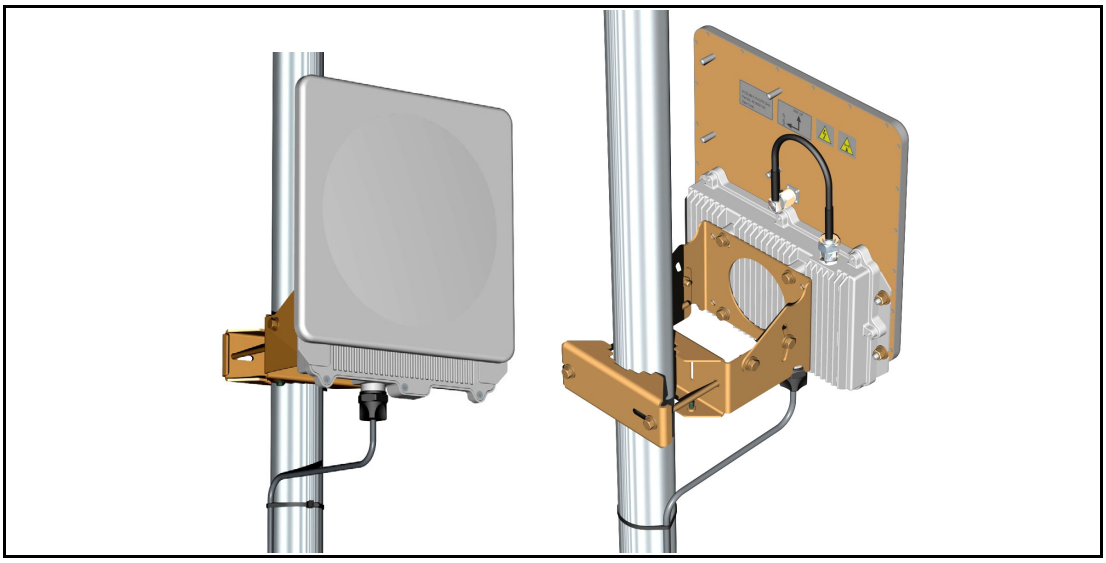

Figure 2: Intro - AN-80i with Integrated Antenna

2.1 Ethernet Port

The AN-80i receives DC power and exchanges data with the indoor network through the Ethernet port. The AN-80i Ethernet port connects to the PoE Adapter using a weatherproof Cat. 5e Ethernet cable. The Ethernet port is a female RJ-45 connector.

2.2 RF Port

The RF port is used to sending and receive RF signal to/from the antenna. A short coaxial cable is provided to connect the transceiver to an external antenna. The RF port is a female N-type connector.

2.3 Mounting Brackets

There are two mounting brackets available for the AN-80i. The lightweight (two-point) antenna bracket provides convenient mounting of one foot flat panel antennas. The heavy-duty (four-point) antenna mounting bracket is available for mounting two foot flat panel and parabolic antennas.

2.4 Grounding Connection

A ground-lug is provided on the AN-80i chassis. Use this connection to terminate a grounding wire.

***Important**: Correct grounding is very important for safe operation of wireless equipment. Ensure that all grounding connections are made in accordance with local and national standards.*

2.5 Antenna Alignment

The AN-80i includes an audible antenna alignment tool to assist in pointing the antenna for maximum signal strength. The signal will sound infrequently when a low signal is detected, and more often as the signal strength increases. The audible signal is enabled and disabled through the user interface:

Telnet: see *buzzer* in section 4.2.6 Set on page 39

Web: see *Antenna Alignment Buzzer Enable* in section 3.5 System Configuration Screen on page 21

2.6 Indoor Power Block (PoE Power Adapter)

The PoE power adapter provides operational power and connection to a local Ethernet network. The power block provides two Ethernet interfaces:

INPUT: The 10/100Base-T Ethernet port (RJ-45) for connection to local network equipment.

OUTPUT: The 10/100Base-T Ethernet port (RJ-45) port to carry signal and power to the AN-80i.

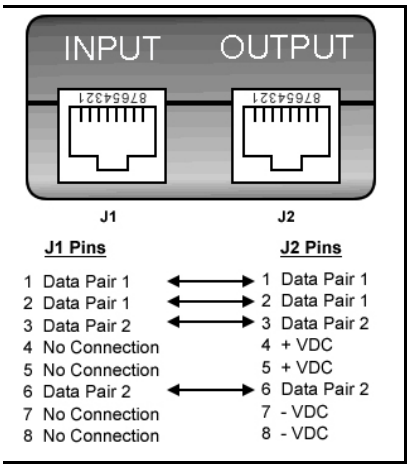

Figure 3: Intro - Indoor Power-over-Ethernet (PoE) Module

Important: PoE Adapter Type

Use the AN-80i only with Cincon PoE Adapter Model TR60A-POE-L.

PoE Power Adapter Caution

Warning to Service Personnel: 48 VDC

Connecting customer premises Ethernet equipment directly to the 'OUTPUT' connector on the AN-80i Power-over-Ethernet power adapter may damage customer network interface equipment. Customer equipment including personal computers, routers, etc., must only be connected to the 'INPUT' port on the PoE unit. Only the outdoors Ethernet interface cable to the AN-80i can be safely connected to the 'OUTPUT' connector.

Chapter

3

3 Web Interface

The Web Interface provides all required settings and statistics necessary to configure and monitor the operation of the AN-80i using a standard web browser. An operator can access and control the AN-80i remotely from any geographical location with HTTP connectivity to that unit.

3.1 System Login

On the PC, open a browser (Internet Explorer 6 or higher recommended). For new systems, enter the default IP address (192.169.25.2). The following dialog should be displayed:

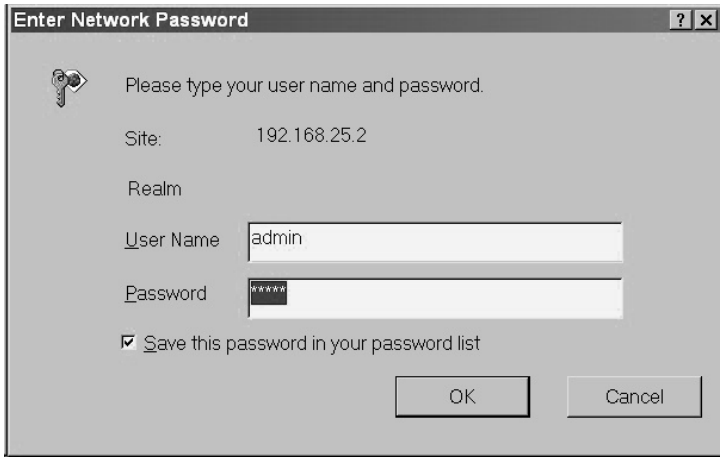

Figure 4: Web - Login Screen

Login to the AN-80i using your user name and password. See Table 5**:** Web - Default System Users on page 28 for the factory default usernames and passwords.

If the IP address, username and/or password have been modified since installation, contact the network administrator to determine the current settings. If the IP address, or the user name and password cannot be determined. See section 5.2: Procedure to Reset AN-80i IP Address on page 48.

3.2 System Menu

Following a successful login, the General Information screen is displayed. On the left is a menu of all available screens. Point and click on the blue text of the menu to display that screen.

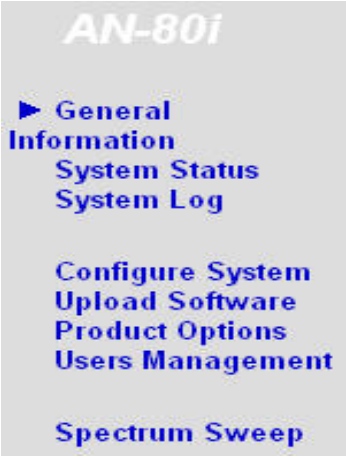

Figure 5: **Web - System Menu**

The administrator (admin) has unrestricted access to all screens. All other users have viewing access only. See 3.6: System Password Screen on page 27 for details.

3.3 System Information

Click General Information to view the system overview screen (read-only). Refer to the System Configuration screen for information about changing these settings.

General Information

System	
System Name	Creation Link
System Details	Master-Redline
Contact	markf
Hardware Revision	0
System Mode	PTP Slave
Software Version	1.00.059
Time Since System Start	0 days, 3 h, 18 min, 28 sec

Ethernet	
Ethernet MAC Address	00:09:02:00:9a:c3
IP Address	192.168.25.32
IP Subnet Mask	255.255.255.0
Default Gateway Address	192.168.25.250

Wireless	
RF Link Established	Yes
Uncoded Burst Rate	54 Mb/s

Figure 6: Web - General Information Screen

General

System Name: User-assigned name for this AN-80i.

System Details: User-assigned system details information.

Contact: User-assigned contact information.

Hardware Version: Displays the hardware version of the AN-80i.

System Mode: The system designated as master establishes and manages the bi-directional data link with a remote end AN-80i. Only one system in a wireless link must be set for Master mode.

PTP Master: AN-80i begins transmitting automatically, sends poll messages to locate the remote AN-80i, and negotiates operating settings for the link.

PTP Slave: AN-80i waits passively, monitoring the selected channel(s) until polled by the PTP Master.

Software Version: Displays the software version in use.

Time Since System Start: Time since the system was last reset or powered-on.

Ethernet

Ethernet MAC Address: Hardware (MAC) address of this AN-80i. This address is also recorded on a label on the AN-80i chassis.

IP Address: User-assigned IP address of this AN-80i.

IP Subnet Mask: User assigned IP subnet mask.

Default Gateway Address: User-assigned IP address of the default router or gateway.

Wireless

RF Link Established: Status of the wireless link.

Yes - RF link successfully established with remote-end AN-80i.

No - RF link not established with remote-end AN-80i.

Uncoded Burst Rate: The current uncoded burst rate for the link.

3.3.1 System Status

Click System Status in the menu to view system, Ethernet statistics, and wireless interface statistics.

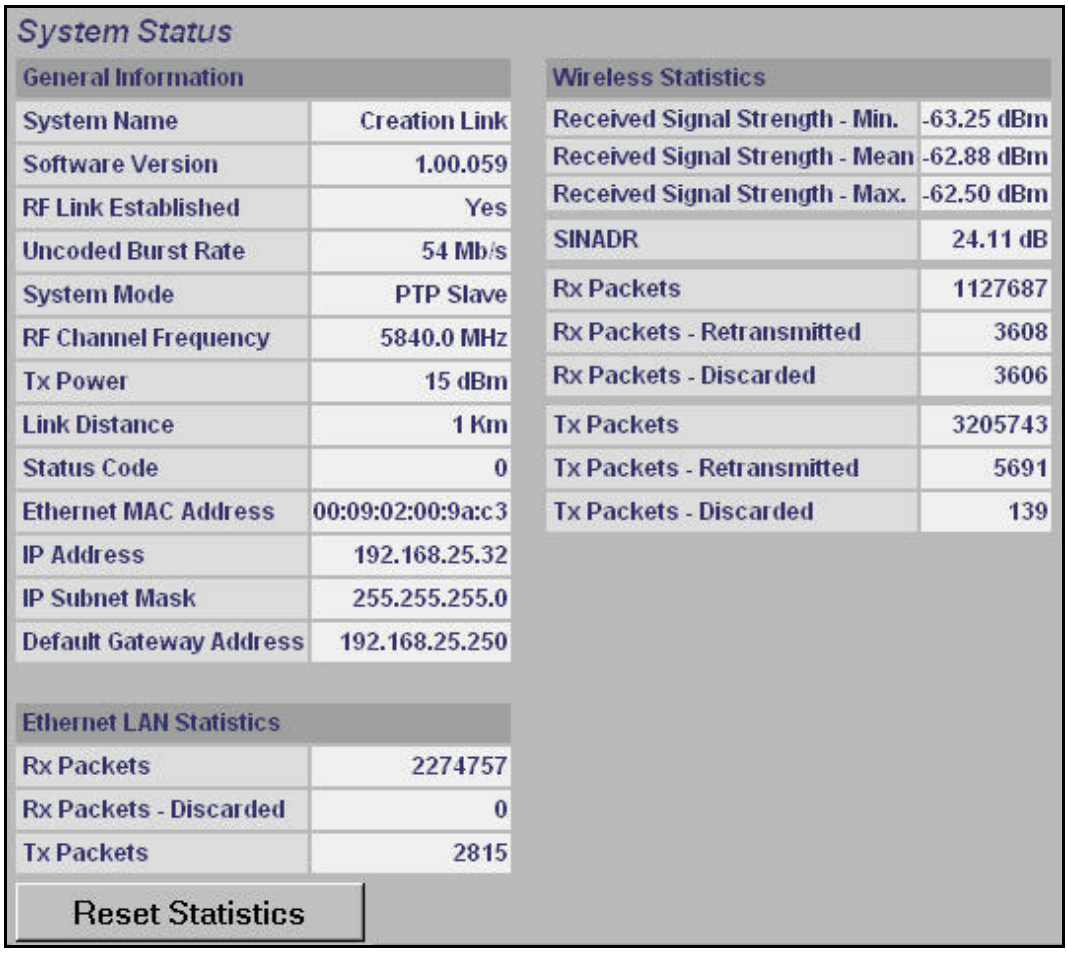

System Status

General Information	
System Name	Creation Link
Software Version	1.00.059
RF Link Established	Yes
Uncoded Burst Rate	54 Mb/s
System Mode	PTP Slave
RF Channel Frequency	5840.0 MHz
Tx Power	15 dBm
Link Distance	1 Km
Status Code	0
Ethernet MAC Address	00:09:02:00:9a:c3
IP Address	192.168.25.32
IP Subnet Mask	255.255.255.0
Default Gateway Address	192.168.25.250

Ethernet LAN Statistics	
Rx Packets	2274757
Rx Packets - Discarded	0
Tx Packets	2815

Wireless Statistics	
Received Signal Strength - Min.	-63.25 dBm
Received Signal Strength - Mean	-62.88 dBm
Received Signal Strength - Max.	-62.50 dBm
SINADR	24.11 dB
Rx Packets	1127687
Rx Packets - Retransmitted	3608
Rx Packets - Discarded	3606
Tx Packets	3205743
Tx Packets - Retransmitted	5691
Tx Packets - Discarded	139

Reset Statistics

General information

System Name: Displays the user-assigned system name.

Software Version: Displays the software version in use.

RF Link Established: Status for the wireless link connection.

Yes - RF link has been successfully established with the remote-end AN-80i.

No - RF link has not been established with the remote-end AN-80i.

Uncoded Burst Rate: The negotiated uncoded burst rate (UBR) for the link.

System Mode: The master system establishes and manages the wireless link with the remote end AN-80i. Each wireless link must have only one master.

PTP Master: This unit begins transmitting automatically; sending poll messages to the remote AN-80i and negotiating the UBR (modulation and coding) for the wireless link.

PTP Slave: This unit waits passively, monitoring the selected channel(s) until polled by the PTP Master.

RF Channel Frequency: User-assigned RF channel.

Tx Power: The current transmit power level. If ATPC is enabled, this value may be different than the Tx Power setting in the System Configuration screen.

Link Distance [Miles or Km]: Distance between wireless systems. This may be the calculated or user-assigned distance (System Configuration screen).

RF Status [Error Code]: A status code indicating the condition of the system RF components. See 5.5: Status Codes on page 51.

Ethernet MAC Address: System hardware address. This is also printed on a label affixed to the AN-80i.

IP Address: User-assigned IP address of the AN-80i.

IP Subnet Mask: User-assigned IP subnet mask.

Default Gateway Address: User-assigned IP for the default router or gateway.

Ethernet LAN Statistics

Rx Packets: Total packets received on the Ethernet port.

Rx Packets: **Discarded**: Total valid Ethernet frames received on the Ethernet port that are discarded due to lack of buffer space.

Tx Packets: Number of packets transmitted on the Ethernet port (including Ethernet frames and error correction bytes).

Wireless Statistics

Received Signal Strength: **Min**: Minimum measured RSSI value.

Received Signal Strength: **Mean**: Average measured RSSI value.

Received Signal Strength: **Max**: Maximum measured RSSI value.

SINADR: Average signal to interference, noise, and distortion ratio measured since the last screen refresh. The measurement includes the effects of AGC.

Rx Packets: Total number of packets received over the wireless interface.

Rx Packets: **Retransmitted** Number of packets received over the wireless interface that were retransmitted by the remote-end system (ARQ mechanism re-transmitting unacknowledged packets).

Rx Packets - Discarded: Number of received packets discarded due to errors.

Tx Packets: Number of packets transmitted over the wireless interface.

Tx Packets - Retransmitted: Number of packets re-transmitted over the wireless interface (ARQ mechanism re-transmitting unacknowledged packets).

Tx Packets: **Discarded**: Total number of packets transmitted over the wireless interface that were not acknowledged (discarded by remote-end due to errors).

Controls

Reset Statistics: Click this button to zero the counters for the wireless and Ethernet LAN Statistics displayed on this page.

3.4 System Logs Screen

Click System Log in the menu to view the system activity and error messages recorded by the AN-80i.

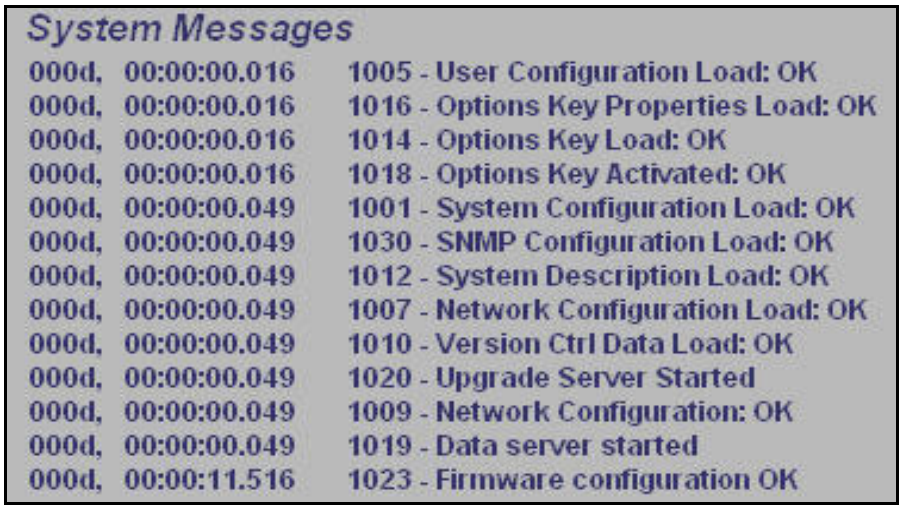

System Messages

000d,	00:00:00.016	1005 - User Configuration Load: OK
000d,	00:00:00.016	1016 - Options Key Properties Load: OK
000d,	00:00:00.016	1014 - Options Key Load: OK
000d,	00:00:00.016	1018 - Options Key Activated: OK
000d,	00:00:00.049	1001 - System Configuration Load: OK
000d,	00:00:00.049	1030 - SNMP Configuration Load: OK
000d,	00:00:00.049	1012 - System Description Load: OK
000d,	00:00:00.049	1007 - Network Configuration Load: OK
000d,	00:00:00.049	1010 - Version Ctrl Data Load: OK
000d,	00:00:00.049	1020 - Upgrade Server Started
000d,	00:00:00.049	1009 - Network Configuration: OK
000d,	00:00:00.049	1019 - Data server started
000d,	00:00:11.516	1023 - Firmware configuration OK

Figure 7: **Web - System Log Messages**

See section 5.6: System Log Messages on page 52 for detailed descriptions of each log message.

3.5 System Configuration Screen

Click Configure System in the menu to view and adjust configuration settings for general system identification, Ethernet, and the wireless interface.

Ethernet Configuration	
System Name:	AN-80i
System Details:	master
System Location:	
Contact:	
IP Address:	192.168.25.34
IP Subnet Mask:	255.255.255.0
Default Gateway Address:	192.168.25.250
Flow Control Enable:	☐
SNTP Enable:	☑
SNTP Server IP Address:	192.168.25.15
Time Zone (GMT):	-5
SysLog Enable:	☐
SysLog Server IP Address:	0.0.0.0
Ethernet Mode:	Auto
HTTP Enable:	☑
Telnet Enable:	☑
Telnet Port:	23
SNMP Enable:	☑ [Configure SNMP]
Wireless Configuration	
RF Freq. [MHz]:	5805.0 Auto scan: ☐
Tx Power[dBm]:	16
DFS Action:	none
Antenna Gain:	30
ATPC Enable:	☐
Adaptive Modulation:	☐
Modulation Reduction Level:	2
Uncoded Burst Rate [Mb/s]:	108 Mb/s
Channel Width [MHz]:	40
Ethernet Follows Wireless:	☐
System Mode:	PTP Master
Software Version:	1.10.057
Encryption Enable:	☐
Encryption Key:	00 00 00 00 00 00
Link Length Measurement Mode:	Auto
Link Length:	0
Link Length Measurement Unit:	Km
Antenna Alignment Buzzer Enable:	☐
Radio Enable:	☑
Save Test Reboot	

Figure 8: Web - PTP Configuration Screen

General

System Name: Enter the name for this AN-80i. The name can be any combination of letters and numbers.

System Details: Enter additional descriptive details about this AN-80i. The description can be any combination of letters and numbers.

System Location: Enter additional descriptive details about this AN-80i. The description can be any combination of letters and numbers.

Contact: Enter additional descriptive details about this AN-80i. The description can be any combination of letters and numbers.

IP Address: Enter the IP address for this AN-80i. The IP address is routable through the Ethernet port and over the wireless interface.

IP Subnet Mask: Enter the IP subnet mask.

Default Gateway Address: Enter the IP address of the default gateway or router on the Ethernet segment connected to the AN-80i Ethernet port.

Flow Control Enable: Check this box ☑ to enable flow control functions (802.3x) on the AN-80i Ethernet port. Enabling this feature allows the AN-80i to request Ethernet devices to pause transmissions during busy periods.

SNTP Enable: Check this box ☑ to enable the SNTP protocol support. This feature allows AN-80i systems to time-stamp log messages using a network time server. When enabled, you must enter the network address of the SNTP server in the SNTP Server IP Address field.

SNTP Server IP Address: Enter the network address of the SNTP server. Valid only when the SNTP Enable field is checked.

Time Zone (GMT): Enter the hours offset from GMT for this time zone. Valid only when the SNTP Enable field is checked.

Syslog Enable: Check this box ☑ to enable the Syslog protocol support. This feature allows AN-80i log messages to be saved in a central repository. When enabled, you must enter the network address of the Syslog server in the Syslog Server IP Address field.

Syslog Server IP Address: Enter the network address of the Syslog server. Valid only when the Syslog Enable field is checked.

Ethernet Mode: Select the operating mode of the Ethernet port.

Auto - Auto-negotiate the speed connection speed.

10 - Operate at 10Base-T only.

100 - Operate at 100Base-T only.

HD - Operate at half-duplex only.

FD - Operate in full duplex only.

***Important**: The auto-negotiate feature does not detect the speed and duplex of manually set Ethernet equipment. The auto-negotiate feature works correctly only when both communicating Ethernet devices are configured for auto-negotiate. Duplex mismatches may result in an unexpected loss of communications.*

HTTP Enable: Check this box ☑ to enable the HTTP (Web) interface. If the option is deselected, only CLI commands will be available.

Telnet Enable: Check this box ☑ to enable a Telnet access (CLI) to the AN-80i. Refer to the CLI commands in section 4: CLI Interface on page 36.

Telnet Port: Enter Telnet port address (default is 23).

SNMP Enable: Check this box ☑ to enable the Simple Network Management Protocol (SNMP) agent. When this item is checked, clicking on the blue text [Configure SNMP] adjacent to the check box displays the SNMP Configuration screen. See section 3.9: SNMP Settings on page 31 for additional information on SNMP settings for the AN-80i.

Wireless Configuration

RF Freq. [MHz]: Enter the center frequency for the RF channel. The options key controls channel availability. The table below specifies the center frequencies of each available channel.

Table 1: Web - RF Channel Range

Channel Size	Frequency Selection (2.5 MHz steps)
10 MHz	5730 - 5845 MHz
20 MHz	5735 - 5840 MHz
40 MHz	5745 - 5830 MHz

To minimize interference, the channel frequencies for AN-80i links operating in close proximity should be separated by a minimum of the channel size in use (to avoid overlapping bands).

Auto scan: Check this box ☑ to enable the AN-80i PTP Slave to automatically scan available channels and locate the current operating frequency of the AN-80i PTP Master.

Tx Power [dBm]: Enter the transmit power level (dBm). This setting is for the transceiver output only. The actual EIRP depends on the gain of the connected antenna (see section 6.2: Antenna and Power Specifications on page 56).

***Important**: In some regions, the maximum operational power per channel for a specific antenna is limited in accordance with regulations specifying the maximum allowable EIRP levels. Refer to the FCC and CE notices in this manual.*

See Table 2: Web - Max. Power (in dBm) and Modulation to determine the maximum transmit power level available at each modulation setting. When ATPC is enabled, the Tx power will be automatically adjusted to achieve optimum performance.

Table 2: Web - Max. Power (in dBm) and Modulation Settings

Modulation	BPSK		QPSK		16 QAM		64 QAM	
Code Rate	1/2	3/4	1/2	3/4	1/2	3/4	2/3	3/4
Max Tx Power	20	20	20	20	20	20	16	16

DFS Action: Select the mode of operation for DFS.

***Important**: Where required by regional regulations, DFS is enabled by the system options key and cannot be disabled.*

The system set to master-mode monitors for interference from radar devices and other equipment using the same channel frequency. When interference is detected, the system automatically takes the action selected using the drop-down menu:

None: The DFS function is disabled.

Tx Off: Transmission is immediately disabled when radar signals are detected. This action is recorded in the message log and an SNMP trap message is sent (if SNMP enabled).

Following an interval of thirty minutes, the same channel is monitored for one minute and if there are no DFS triggering events, the system resumes normal operation. If DFS trigger conditions are still detected, operation is suspended for an additional thirty minutes. This cycle continues until no DFS trigger events are detected or the operator manually reconfigures the system.

Chg Freq: Relocate transmission to an alternative frequency immediately when radar signals are detected. This action is recorded in the message log and a trap message is sent (if SNMP enabled).

The new channel is selected based on allowable frequencies for the regulatory region of that installation. The channel is monitored for one minute before the system is allowed to transmit. If DFS triggering events are detected, the next available channel is selected and monitored. The system is not allowed to return to a channel on which DFS trigger events were detected for a period of thirty minutes. If DFS trigger events are detected on all channels, operation is suspended until the thirty-minute time interval expires for at least one channel.

Antenna Gain: Enter the gain (dBm) for the system antenna.

It is important that the Antenna Gain setting matches the actual antenna gain. If the antenna gain is set higher than the true antenna gain, the system is less sensitive to detecting interference, and is not operating in compliance with the UK/ETSI standard. If the antenna gain is set lower than the true antenna gain, the system is more sensitive to interference and this may result in false DFS triggers.

ATPC Enable: Check this box ☑ to enable the AN-80i to monitor the received signal and request that the remote system adjustment its transmit level for optimum performance. The ATPC feature must be enabled on both AN-80i units.

Adaptive Modulation: Check this box ☑ to enable the AN-80i to automatically adjust the transmission modulation and code settings to achieve the highest UBR that will operate with a packet error rate (PER at layer 2) of less than 1x10e-6. If the PER exceeds 1x10e-6, the AN-80i automatically adjusts the modulation and code settings downwards (i.e., from 16 QAM 3/4 to 16 QAM 1/2) to operate at a lower UBR where the PER is acceptable.

When disabled, the modulation and code settings are entered manually using the Uncoded Burst Rate setting. See Table 2**:** Web - Max. Power (in dBm) and Modulation.

Channel Width: Select the channel bandwidth. See Table 1**:** Web - RF Channel Range.

Modulation Reduction Level: Enter the number of modulation/coding levels to step down during re-transmission of errored wireless packets. Each step down lowers the UBR. The level can be set from 0 to 7 (recommended value = 2).

Uncoded Burst Rate [Mb/s]: Select the desired UBR for the link. If Adaptive Modulation is disabled, the AN-80i will transmit using only the specified settings. See Table 2**:** Web - Max. Power (in dBm) and Modulation.

Ethernet Follows Wireless: Check this box ☑ to have the AN-80i disable and enable the Ethernet port function based on the status of the wireless interface. This feature allows switches and routers to trigger configuration changes based on changes to the AN-80i Ethernet port status.

Disabled (☐): The AN-80i Ethernet port is always enabled.

Enabled (☑): The Ethernet port status is controlled based on the status of the wireless interface. See the following table.

Table 3: Web - Ethernet Status Indication

Configuration Setting	Wireless interface Status	Ethernet Port Status
Ethernet Follows Wireless ☐	Link Up	Enabled
	Link Down	Enabled
Ethernet Follows Wireless ☑	Link Up	Enabled
	Link Down	Disabled

***Important**: Enabling the Ethernet Follows Wireless setting affects all data and management traffic (HTTP, TELNET, and SNMP). While the wireless interface is down, it is not possible to establish communications with the AN-80i using the Ethernet port. If the wireless interface is down, the Ethernet Follows Wireless setting can only be set to 'off' by using the IP recovery procedure. See 5.2: Procedure to Reset AN-80i IP Address on page 48.*

System Mode: The PTP Master establishes and manages the bi-directional data link with a remote end AN-80i. Only one system in a wireless link must be set for PTP Master mode.

PTP Master: This unit begins transmitting automatically; sends poll messages to the remote AN-80i, and negotiates the wireless link.

PTP Slave: This unit waits passively, monitoring the selected channel(s) until polled by the PTP Master, and participates in negotiating the wireless link.

Software Version: Select the version of system software to load when the AN-80i is rebooted. The system holds two independent software images.

Encryption Enable: Check this box ☑ to enable encryption of data transmitted over the wireless interface. When encryption is enabled, no Ethernet packets can be transferred over-the-air unless encryption is enabled on the remote-end AN-80i, and the correct encryption key is entered on both AN-80i units.

Encryption Key: The key is used to encrypt data in a way that can be decoded by the remote-end AN-80i. Enter the MAC address of the communicating AN-80i.

Link Length Measurement Mode: Select the mode for setting/measuring the distance between this and the remote-end AN-80i.

Auto: Distance is calculated automatically by the AN-80i.

Manual: Enter the link distance manually in the Link Length field.

Link Length: Enter the actual length of the path that the radio wave travels between the two AN-80i units. The Link length is used to calculate the transmission-to-response interval and reject reflections of the transmitted signal. This setting is valid only when the Link Length Mode is set to Manual.

Link Length Measurements Unit: Select the units for the Link Length field.

Mile: Link length distance is displayed in miles.

Km: Link length distance is displayed in kilometers.

Antenna Alignment Buzzer Enable: Check this box ☑ to enable the antenna alignment audible tone generator in the transceiver. The rate of the tone is proportional to the receive signal strength (faster = stronger signal).

Radio Enable: Check this box ☑ to enable the radio transmitter. If this box is unchecked (☐), it will not be possible to establish a wireless link.

Controls

Save: Click this button to save the parameter settings displayed in the configuration screen.

Note: Changes to some parameters cause the AN-80i to initiate a system reset when the Save button is selected.

Test: Click this button to have the AN-80i load the current settings displayed in the configuration screen. The AN-80i will operate with these settings for a period of five minutes. During the 'test' period, you may click the Save button at any time to save this configuration permanently (also terminating the five minute timer). If the Save button is not selected during the five minute test period, the AN-80i is rebooted and the previously saved settings are reloaded.

System Reboot: Click this button to immediately reboot the AN-80i. All statistics counters are reset.

3.6 System Password Screen

Click Users Management in the left hand menu to display the System Password screen. This screen allows the operator to modify the system passwords.

The AN-80i supports two groups of users: admin and user. See Table 5**:** Web - Default System Users on 28 for the factory default login values. See Table 4**:** Web - Screens and User Access on page 28 for permissions associated with each group.

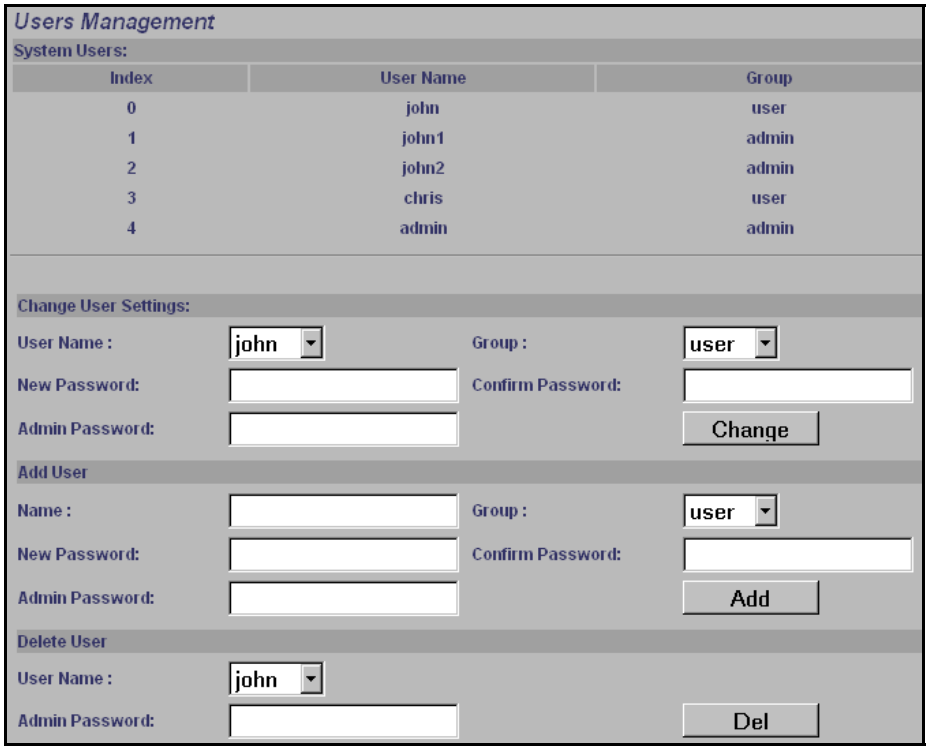

Figure 9: **Web - System Password Screen**

Change User Settings

Use this dialog to change the settings for an existing user.

User name: Select an existing user to be modified.

Group: Select the group to be associated with this username.

New Password: Enter the new password for this user.

Confirm Password: Re-enter new password for this user.

Admin Password: Enter the administrator password (security feature).

Change: Click the Change button to make these changes effective.

Add User

Use this dialog to add a new user.

User name: Enter a name for the new user.

Group: Select a group for the new user.

New Password: Enter a password for the new user.

Confirm Password: Re-enter the password for the new user.

Admin Password: Enter the administrator password (security feature).

Add: Click the Add button to make these changes effective.

Delete User

Use this dialog to delete an existing user.

User name: Select an existing user.

Admin Password: Enter the administrator password (security feature).

Del: Click the Del button to make these changes effective.

Group Permissions

The following table lists the permissions associated with each group.

Table 4: Web - Screens and User Access

Screen	Admin Access	User Access	Description
General Information	X	X	View general system identification and configuration settings.
System Status	X	X	View system information, Ethernet statistics, and wireless statistics.
System Log	X	X	View the system status messages recorded by the AN-80i.
Configure System	X		View and adjust configuration settings for general system identification, IP address, management functions, and the wireless interface.
Upload Software	X		Upload a new software binary file.
Users Management	X X	X	Change your login password. Add and delete users.
Product Options	X		View and change the product options key.
Spectrum Sweep	X		Scan a range of frequencies to detect other RF sources (interference).

The following table lists the default login names and passwords.

Table 5: Web - Default System Users

Group	User Name	Default Password
user	user	user
admin	admin	admin

Important:

There must always be at least on 'administrator' account active on the system. If all accounts are changed to 'user' the AN-80i can <u>not</u> be managed.

3.7 AN-80i Product Options Screen

Click Product Options in the left hand menu to display the Product Options screen.

The options key enables AN-80i features including the maximum allowed Uncoded Burst Rate (UBR) and frequency ranges (region codes). Every options key is unique and will only enable functions for the AN-80i with the matching MAC address.

For each new AN-80i received from the factory, the options key is provided on a printed label supplied with the unit. You will be unable to establish a wireless until the product options key is typed into the Options Key field on this screen.

Figure 10: Web - Product Options Screen

Entering the Options Key

1. Enter the key (case sensitive).
2. Verify that the entered value is correct
3. Click the Activate button.
4. Click System Log in the menu and verify the key has been accepted.

3.8 Upload Software

Click Upload Software in the left hand menu to display the Upload Software screen. This screen is used to upgrade the AN-80i with new software. The AN-80i contains non-volatile storage for two versions of the software. The upload overwrites the non-operational (unselected) version.

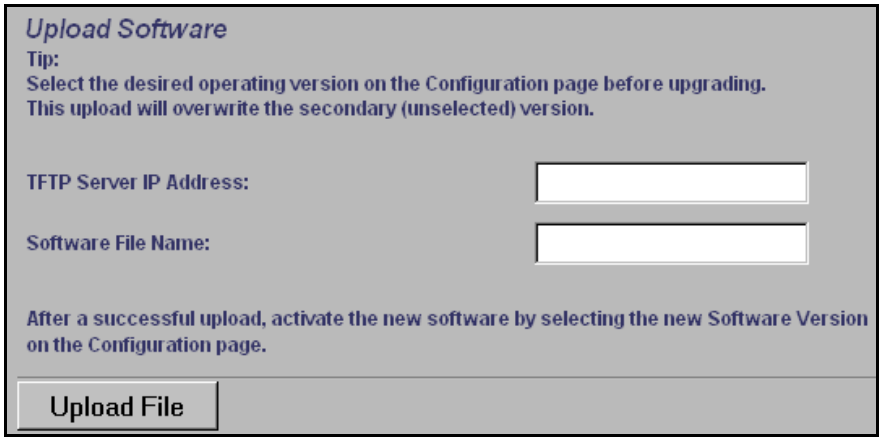

Figure 11: Web - Upload Software Screen

TFTP Server IP Address: Enter the IP address of the computer with the software upgrade file. This computer must be running a TFTP server.

Software File Name: Name of the software binary file (including file extension).

Upgrade Steps

Trivial File Transfer Protocol (TFTP) is used to upload the new software image file from your computer to the AN-80i. A TFTP server software must be installed and running on the computer you are using to upload the new software file. In addition, the AN-80i software binary file must be located in the default upload directory for the TFTP server.

1. Enter the IP Address of the computer running the TFTP server.
2. Enter the full name of the binary file (including the .bin extension).
3. Click the Upload File button to begin the file transfer. The upgrade file size is approximately two Megabytes and takes a minimum of two to four minutes to transfer. Slower network connections may take longer -- do not interrupt the transfer process.
4. When the file transfer is complete, the AN-80i verifies the integrity of the new software file. If errors were introduced during the transfer process, the software file is rejected and a warning message is registered in the event log, and you must repeat the upload.
5. When the transfer has completed successfully, use the System Configuration screen to select which software version to load on the next system reboot (does not switch automatically following upload).

3.9 SNMP Settings Screen

Click Configure SNMP (blue text) on the System Configuration screen to view and edit the SNMP settings. The hyperlink appears only if the SNMP Enable box is checked.

The SNMP protocol allows an application to interrogate the AN-80i for information saved in the MIB an to change enabled fields within the MIB. When the SNMP Agent in the AN-80i detects an error condition, a special message known as a trap can be sent (if enabled). A Trap Host is an IP system/server that is set up to receive SNMP trap messages. The SNMP Configuration screen displays a list of the current communities. The Chg buttons can be used to add, edit, or delete community settings.

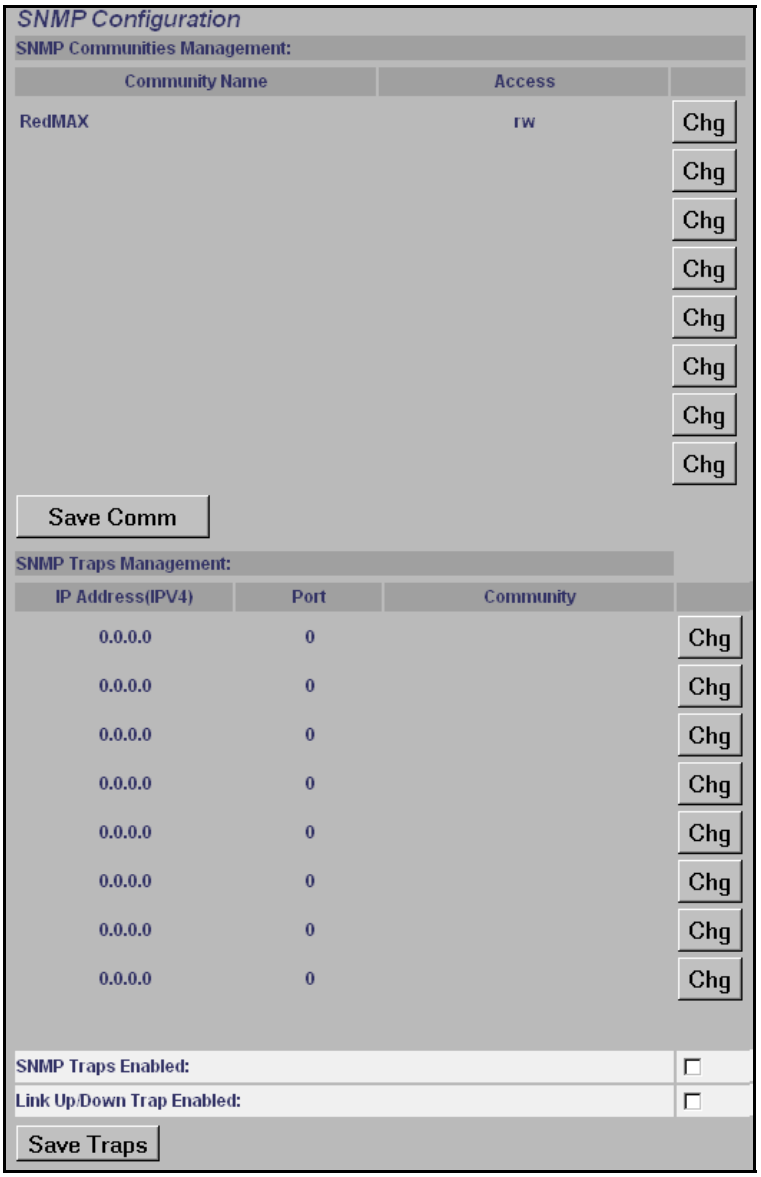

Figure 12: Web - SNMP Configuration Screen

SNMP Community Management

Community Name: Displays the SNMP community name for each entry (maximum of eight entries).

Access: Displays the access permissions for each SNMP community.

None: Deny read and write permission for this community.

Read: Grant read access permission only for this community. Deny write permission.

Write: Grant write access permission only for this community. Deny read permission.

Read&Write: Grant read and write access permission for this community.

Chg: Click the Chg button to modify the settings for the adjacent entry.

Save Comm: Click the Save Comm button to save changes to the community settings.

SNMP Traps Management

IP Address(IPv4): IP address associated with this SNMP alarm.

Port: Destination port address associated with this SNMP alarm.

Community: Community associated with this SNMP alarm.

Chg: Click the Chg button to modify the settings for the adjacent entry.

SNMP Traps Enabled: Check this box ☑ to enable SNMP traps to be sent. If the box is not checked, all SNMP traps are disabled.

Link Up/Down Trap Enabled: Check this box ☑ to enable an SNMP trap to be generated for each link up and link down event.

Save Traps: Click the Save Traps button to save changes to the SNMP trap settings.

3.9.1 Change SNMP Community

Each entry in the SNMP Community Management table may be changed individually. Click the Chg button adjacent to any entry to modify the settings.

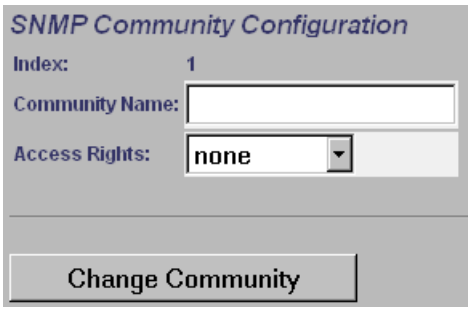

Figure 13: **Web - SNMP Add/Change Community Screen**

Index: Display the unique reference number for this entry.

Community Name: Enter or modify the SNMP community name for this entry.

Access Rights: Select the access permissions for this entry.

None: Deny read and write permission for this entry.

Read: Grant read access permission only for this entry. Deny write permission.

Write: Grant write access permission only for this entry. Deny read permission.

Read&Write: Grant read and write access permission for this entry.

Change Community: Click the Change Community button to copy these settings to the community settings table. This action does not permanently save changes. To save changes to the community settings you must also click the Save Comm button in the SNMP Configuration screen.

3.9.2 Change SNMP Trap Configuration

Each of the eight entries in the SNMP Traps Management table may be changed individually. Click the Chg button to modify the settings for the adjacent entry.

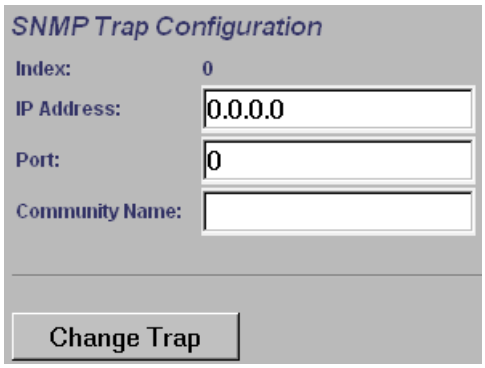

Figure 14: Web - SNMP Add/Change Community Screen

Index: Display the table position number for this entry. Position 0 is the first entry.

IP Address: Enter the IP address (IPv4) associated with this SNMP alarm.

Port: Enter the destination port address associated with this SNMP alarm.

Community Name: Enter the SNMP community name for this entry.

Change Trap: Click the Change Trap button to copy these settings to the community settings table. This action does not permanently save changes. To save changes to the SNMP trap settings you must click the Save Traps button in the SNMP Configuration screen.

3.10 Spectrum Sweep

Click Spectrum Sweep in the left hand menu to display the Spectrum Sweep configuration screen. The spectrum sweep feature is an off-line RF survey tool to detect interference and evaluate spectrum availability. Configurable survey parameters include the high and low frequency limits, the step size, and the number of samples at each step. The output graph displays the maximum (red) and average (blue) RSSI for each step.

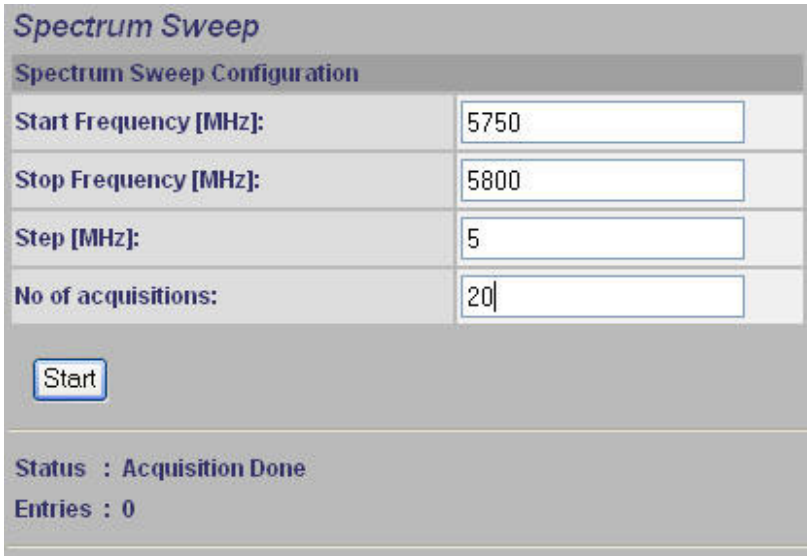

Figure 15: **Web - Spectrum Analyzer Screen**

Start Frequency (MHz): Enter lowest frequency to be scanned. See Table 1**:** Web - RF Channel Range.

End Frequency (MHz): Enter highest frequency to be scanned. See Table 1**:** Web - RF Channel Range.

Step (MHz): Enter the frequency step (MHz) to use when scanning from the lowest to the highest frequency. The step selection must be a multiple of 2.5 MHz (i.e., 2.5, 5, 7.5, etc).

No. of acquisitions: Enter the number of times the frequency will be sampled at each step. The recommended range is 10 to 100 samples. When a potentially clear channel is identified, reduce the frequency range and step size while increasing the sample size to monitor the channel over a longer period.

Start: Left-click the Start button to begin the scan.

Performing a Sweep

The transmitter of the PTP Master AN-80i is automatically disabled during the spectrum scan. If the scan is being performed from a PTP Slave AN-80i, the transmitter on the remote AN-80i for this link should be disabled during the test. You can use the configuration test feature to remotely (over-the-air) shut down the remote transmitter for 5 minutes and then recover automatically. See the description of the Test button in section 3.5: System Configuration Screen under the heading Controls on page 26.

Table 6: Web - Performing a Spectrum Sweep	
Setting	Description
System Mode: PTP Slave	No action required: Remote end will remain passive during sweep.
System Mode: PTP Master	Use Web/CLI to disable radio on remote-end. Use 'test' function to save and remote end will restore radio operation automatically after 5 minutes.

Chapter

4

4 CLI Interface

This section describes the procedures for configuring and operating the AN-80i using CLI over a Telnet connection.

4.1 Overview

4.1.1 Connecting via Telnet

To connect to the AN-80i, open a Telnet session to the IP address of the AN-80i. On a Windows™ PC, open the Run command and type 'telnet' followed by the IP address of the AN-80i. When the command prompt screen appears, login to the AN-80i. The AN-80i may now be controlled using a set of CLI commands.

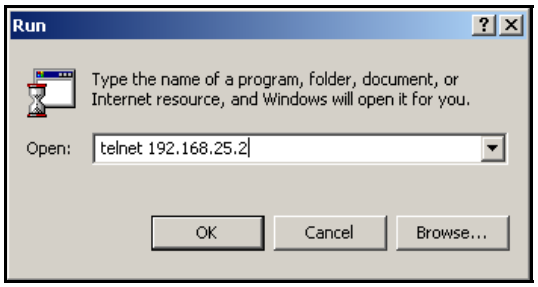

Figure 16: **CLI - Connecting via Telnet**

The system will logout users automatically if no commands are received (idle) for five minutes. To exit immediately from the CLI, type the following command:

logout [ENTER]

4.1.2 Common Commands

Use the following CLI control commands in all configuration modes.

Table 7: CLI - Root Mode Commands	
Command	Description
?	Use the '?' character to display help for any command or mode. Example: From the root directory, enter the following command to list all parameters that can be changed using the 'set' command: set ?
CTRL-Z	Return to root mode. Cancel command entry (alternative to backspace delete).
exit	Return to parent node / mode.
	all (exit all) Return to root mode.
logout	Terminate this telnet session. May be entered from any mode.

4.2 CLI Commands

The following table lists all AN-80i commands available from root mode (default mode when you login). All commands are case-sensitive. Use the following general format for all commands:

command <Enter>

Table 8: CLI - Command Summary	
Command	Description
chgver	Change the default version of software and reboot the AN-80i.
get	Display the value of a statistic or read-only parameter (i.e., MAC).
reboot	Reboot the AN-80i.
reset	Reset the AN-80i statistics values.
save	Save the selected configuration settings (i.e., SNMP settings)
set	View/modify a system parameter value.
show	View system compound objects (i.e., configuration settings).
snmpcommunity	View/modify the SNMP community settings.
snmptrap	View/modify the SNMP trap settings.
test	Activate edited changes to the system configuration for a test period of five minutes.
upgrade	Upload a software binary image to the AN-80i.
user	View/modify the user/password configuration.

4.2.1 Chgver

Use the ***chgver*** command to change the software version to loaded when you reboot the AN-80i. Also see the Get command 'swver'.

Table 9: CLI - chgver	
Command	Parameter/Description
chgver	Enter this command to toggle between software versions. The setting will alternate between the two banks of memory (no parameters). chgver <Enter>

4.2.2 Get

Use the ***get*** command to view system parameters. Use the following general format to view a parameter:

get [field] <Enter>

Table 10: CLI - get	
Command	Parameter/Description
get	**calcdst**: Calculated link distance between units.
	erxpkt: Number of Ethernet packets received.
	erxpktd: Number of Ethernet packets received that were discarded.
	etxpkt: Number of Ethernet packets transmitted.
	mac: AN-80i MAC address.
	radiotype: Radio type.
	rffreq: Current RF frequency setting.
	rflink: Status of the RF link.
	rfstatus: Status RF transmitter.
	rssimax: Maximum RSSI.
	rssimean: Mean RSSI.
	rssimin: Minimum RSSI.
	sinadr: Ration of signal to interference + noise.
	swver: List the downloaded software versions.
	sysuptime: Display the time since the last reboot.
	txpower: Current Tx power setting.
	ubrate: Current UBR value.
	wrxpkt: Number of wireless packets received.
	wrxpktd: Number of wireless packets received that were discarded.
	wrxpktr: Number of wireless packets that were retransmitted.
	wtxpkt: Number of wireless packets transmitted.
	wtxpktd: Number of wireless packets transmitted that were discarded.
	wtxpktr: Number of wireless packets that were retransmitted.

4.2.3 Reboot

Use the ***reboot*** command to remotely reset the AN-80i.

Table 11: CLI - reboot	
Command	Parameter/Description
reboot	Reboot the AN-80i. There are no parameters associated with this command. reboot <Enter>

4.2.4 Reset

Use the ***reset*** command to set all AN-80i statistics values to zero.

Table 12: CLI - reset	
Command	Parameter/Description
reset	stats: Reset the AN-80i statistics counters. reset stats <Enter>

4.2.5 Save

Use the ***save*** command to copy edited parameter settings into non-volatile memory. See section 5.3: Testing and Saving System Parameters on page 49.

save [option] <Enter>

Table 13: CLI - save	
Command	Parameter/Description
save	**config**: Save Ethernet, wireless, and user configuration settings. **snmp**: Save SNMP settings. **defaultconfig**: Overwrite current settings with the factory default Ethernet, wireless, and SNMP settings.

4.2.6 Set

Use the ***set*** command to view and/or change a parameter.

View a parameter:

set [field] <Enter>

Change a parameter:

set [field] [value] <Enter>

Table 14: CLI - set	
Command	Parameter/Description
set	**adaptmod**: Enable or disable the adaptive modulation function. **off** - Disable **on** - Enable When enabled, the AN-80i will automatically change the modulation to the highest setting that can sustain a packet error rate lower than 1x10e-6. If the packet error rate exceeds 1x10e-6, the system automatically steps down modulation/code rate (i.e., from 16 QAM 3/4 to 16 QAM 1/2) to maintain the wireless link quality.

Table 14: CLI - set	
	atpc: Enable or disable the ATPC function. Both AN-80i units monitor Rx signal and automatically adjust the Tx level of the transmitting system to optimize system performance. The ATPC feature must be enabled on both ends of the link. **off** - Disable **on** - Enable This mode can be changed only if allowed by the options key. If the options key does not allow changes: 1) value is specified by the options key, 2) executing a set command for this field will generate an error message.
	autoscan: Enable or disable the Autoscan function. **off** - Disable **on** - Enable When enabled, the PTP Slave (system mode) AN-80i automatically scans available channels to locate the current operating frequency of the PTP Master system. Executing a set command this field on a PTP Master will generate an error message.
	buzzer: Enable or disable the audible alignment buzzer. **off** - Disable **on** - Enable When enabled, the rate of the tone is proportional to the receive signal strength (faster = stronger signal).
	chwidth: Enter the channel bandwidth in MHz. Valid entries are 10, 20, and 40.
	dst: Enter the actual length of the path that the wave travels in order to establish the link. Units are defined by dstmu setting. This value is used to calculate the transmission-to-response interval and disregard reflections of the transmitted signal. Used only if dstmod is set to 'manual'.
	dstmode: Select the mode for determining the distance of the wireless link. **auto**: Distance is calculated automatically by the AN-80i. **manual**: Operator enters link distance.
	dstmu: Select the measurement unit for the link length (dstmode). **mile** - dstmode units are miles **km** - dstmode units are kilometers
	efw: Enable or disable the Ethernet Follows Wireless function. **off** - Disable **on** - Enable When Ethernet Follows Wireless is enabled the Ethernet port status is controlled to reflect the status of the wireless interface. When the AN-80i detects that the wireless interface has failed (or is manually disabled), the local Ethernet port is immediately disabled When the AN-80i re-establishes the wireless link, the Ethernet port is re-enabled..
	encen: Enable or disable the encryption function. **off** - Disable **on** - Enable If encryption is enabled, the correct encryption keys must be entered on both communicating systems.

Table 14: CLI - set	
	enckey: Enter the encryption key. If encryption is enabled, the correct encryption keys must be entered on both communicating systems. Used only if encen is set to 'on'.
	ethmode: Enter the Ethernet speed and duplex setting. **auto** - Auto-negotiate **10hd** - 10Base-T Half Duplex **10fd** - 10Base-T Full Duplex **10hd** - 100Base-T Half Duplex **100fd** - 100Base-T Full Duplex
	flowctrl: Enable or disable the flow control function. The Flow control feature enables the AN-80i to request other Ethernet devices to pause transmission during busy periods. **off** - Disable **on** - Enable
	gateway: Enter the IP address of the default gateway on this segment.
	gmt: Enter the time offset from GMT (i.e., -5 for EST).
	http: Enable or disable the HTTP function. When disabled, the Web interface will not be available. **off** - Disable **on** - Enable
	ipaddr: Enter the IP address of the AN-80i.
	maxtxpower: Enter the Tx power level (dBm). This setting is for the transceiver output only. The actual EIRP depends on the gain of the connected antenna. See section 6.2: Antenna and Power Specifications on page 56 for a list the maximum transmit power setting based on the antenna gain for a series of frequency settings. The maximum value for this field is determined by the options key.
	mrate: Enter the maximum uncoded burst rate (Mbps). Entry values are dependant on the channel bandwidth (chwidth). 10 MHz: 3, 4.5, 6, 9, 12, 18, 24 or 27 20 MHz: 6, 12, 18, 24, 30, 36, 48, or 54 40 MHz: 12, 24, 36, 48, 60, 72, 96, or 108 The maximum value for this field is determined by the options key.
	netmask: Enter the IP netmask.
	optionskey: Enter the options key string.
	radio: Enable or disable the radio transmitter. **off** - Disable **on** - Enable
	ratedif: Enter the number of modulation levels to step down during re-transmission of errored wireless packets. The level can be set from 0 to 7 (recommended value = 2).
	rffreq: Enter the center frequency for the RF channel. When operating multiple links in close proximity, separate channel frequencies by 20 MHz or more to minimize interference. When operating in turbo mode, the separation must be greater than 40 MHz.

Table 14: CLI - set	
	snmp: SNMP enable setting. **off** - Disable the SNMP agent. **on** - Enable the SNMP agent.
	sntp: SNTP enable setting. **off** - Disable SNTP protocol support. **on** - Enable SNTP protocol support.
	sntpip: Enter the SNTP server IP address. Valid only if sntp is enabled.
	syscontact: Enter additional descriptive details about this AN-80i. The description can be any combination of up to 20 letters and numbers.
	sysdescr: Enter descriptive details about this AN-80i. The description can be any combination of up to 20 letters and numbers.
	sysloc: Enter descriptive details about the location of this AN-80i. The description can be any combination of up to 20 letters and numbers.
	syslog: Syslog enable setting. **off** - Disable syslog server protocol support. **on** - Enable syslog server protocol support.
	syslogip: Enter the syslog server IP address. Valid only if syslog is enabled.
	sysmode: The system designated as master establishes and manages the bi-directional data link with a remote end AN-80i. Only one system in a wireless link must be set for Master mode. **ptpmaster** - This unit begins transmitting automatically; sending poll messages to locate the remote AN-80i and then negotiates to establish the wireless link. **ptpslave** - This unit waits passively, monitoring the selected channel(s) until polled by the PTP Master, and then negotiates to establish the wireless link.
	sysname: Enter the name for this AN-80i. The name can be any combination of up to 20 letters and numbers.
	telnet: Enable or disable the Telnet port. If the Telnet port is disabled, it will not be possible to use the CLI interface. **off** - Disable **on** - Enable Changes to this field are effective only following reboot.
	telnetport: Enter Telnet port address (default is 23).

4.2.7 Show

Use the ***show*** command to display system statistics.

show <Enter>	Change to 'show' mode.
show [field] <Enter>	Display values for the selected parameter.

Table 15: CLI - show	
Command	Description

Table 15: CLI - show		
show	**log**: Show log entries. 000d, 00:00:00.016 1016 - Options Key Properties Load: OK 000d, 00:00:00.016 1014 - Options Key Load: OK 000d, 00:00:00.016 2018 - Options Key Activated: OK …	
	config: Show parameter settings: Sys. Info: **sysname** = ABC-123 **sysdescr** = AN-80i Sys **sysloc** = Lab **syscontact** = 315 Eth. Cfg: **ipaddr** = 192.168.25.32 **netmask** = 255.255.255.0 **gateway** = 192.168.25.250 **flowctrl** = Off **sntp** = On **sntpip** = 192.168.25.15 **gmt** = -5 **syslog** = On **syslogip** = 192.168.25.25 **ethmode** = auto **http** = On **telnet** = On **telnetport** = 23 **snmp** = On Wireless Cfg: **rffreq** = 5840.0	**autoscan** = Off **maxtxpower** = 16 **dfsaction** = chgfreq **antgain** = 30 **atpc** = Off **adaptmod** = On **ratedif** = 0 **chwidth** = 40 **efw** = Off **mrate** = 6 Mbps (0) **sysmode** = ptpslave **swver** = 1.10.057 (other: 1.00.140) **encen** = Off **enckey** = 00 00 00 00 00 00 **dstmode** = auto **dst** = 1 **dstmu** = km **buzzer** = Off **radio** = On
	snmp: Show SNMP settings: **SNMP Enabled**: On **Traps Enabled**: Off **Trap Link Up/Down Enabled**: Off	

Table 15: CLI - show		
	stats: Show system statistics. General Info: **sysname** = ABC-123 **sysdescr** = AN-80i **sysloc** = Lab **syscontact** = 315 **mac** = 00:09:02:00:9a:c3 **radiotype** = T80i **swver** = 1.10.057 (other: 1.00.140) **sysuptime** = 6d, 1h, 49m, 52s **SYSMODE** = ptpmaster **rflink** = On **rffreq** = 5840.0 **calcdst** = 0 Km **txpower** = 16 **chwidth** = 40 MHz **ubrate** = 54 Mbps (7) **rfstatus** = 7	Eth. Stat: **erxpkt** = 41778082 **erxpktd** = 0 **etxpkt** = 29504256 Wireless Stat: **rssimin** = -57.13 **rssimean** = -56.38 **rssimax** = -56.00 **sinadr** = 23.21 **wrxpkt** = 58179068 **wrxpktr** = 120829 **wrxpktd** = 61103 **wtxpkt** = 66721545 **wtxpktr** = 42317 **wtxpktd** = 928

4.2.8 Snmpcommunity

Use the ***snmpcommunity*** command to configure SNMP community permissions.

Table 16: CLI - snmpcommunity	
Command	Description
snmpcommunity	**add**: add a new snmp community to the snmp community table. The index value is assigned automatically. Up to eight community entries can be entered in the table. snmpcommunity add <name> <string> <Enter> snmpcommunity add <rights> 0 | r | w | rw <Enter> Where. **0** (zero):Deny read and write permission. **r**: Grant read access permission only. Deny write permission. **w**: Grant write access permission only. Deny read permission. **rw**: Grant read and write access permission for this community.
	default: Set all snmp parameters to factory default settings. snmpcommunity default <idx> <Enter>
	del: Delete the specified community entry. snmpcommunity del <idx> <Enter>
	print: List all SNMP communities and associated permissions. snmpcommunity print <Enter>

4.2.9 Snmptrap

Use the ***snmptrap*** command to configure the SNMP trap message reporting.

Table 17: CLI - snmptrap	
Command	Description
snmptrap	**add**: add a new snmp trap to the snmp trap table. The index value is assigned automatically. Up to eight settings can be entered. snmptrap add <ipaddr> <port> <community> <Enter>
	change: Modify the specified snmp setting. snmptrap change <idx> [-p <port>] [-i <ip_add>] [-c <community] <Ent>
	del: Delete the specified snmp setting. snmptrap del <idx> <Enter>
	print: List all SNMP trap settings. snmptrap print <Enter>

4.2.10 Test

Use the ***test*** command to load the current edited (but not permanently saved) configuration settings.

Table 18: CLI - test	
Command	Parameter/Description
test	**config** - AN-80i configuration settings test config <Enter>

The system will operate using these setting for five minutes. During this five minute period, you may enter 'save' at any time to permanently save the running configuration. If you do not 'save' the configuration within five minutes, the AN-80i reboots -- discarding the unsaved settings and loading the last saved configuration.

4.2.11 Upgrade

Use the ***upgrade*** command to upload a new software binary file to the AN-80i.

Table 19: CLI - upgrade	
Command	Description
upgrade	**ipaddr**: Enter the IP address of the FTP server. **filename**: Enter the name of the binary file to be uploaded to the AN-80i. upgrade <ipaddr> <filename> <Enter> You must specify the TFTP server address and the full name of the binary file (including .bin extension). The AN-80i software binary file must be located in the default directory of the TFTP server.

4.2.12 User

Use the ***user*** command to manage user accounts, passwords, and user groups. When in user mode, only the <chgpasswd> field is available, since the user can change only his own password. The other commands are available only for members of the administrator group.

Table 20: CLI - user	
Command	Description
user	**add**: Administrators can use this command to add new user accounts. This option is available only for administrators. user add <username> <usertype> <Enter>
	chgpasswd: For the user accounts, the chgpasswd command must be executed without the <username> parameter -- user's can change only their own password. user chgpasswd [<username>] <Enter> Adminitrators can change their own password, or specify a <username> to change the password of the specified user account. user chgpasswd [<username>] <Enter>
	del: Administrators can use this command to delete user accounts. This option is available only for administrators. user del <username> <Enter>
	print: Administrators can use this command to display a list of user accounts. This option is available only for administrators. user print <Enter>

Chapter

5

5 Diagnostics and Troubleshooting

This section provides basic diagnostic and troubleshooting procedures to help solve problems that may occur with the system. If the system is not operating correctly after applying the suggestions in this section, please contact your local Redline representative. Include the model name and serial number of the system in your communications.

5.1 Factory Default Settings

The following parameters are the factory default settings for the AN-80i.

Table 21: Diag. - Factory Default Settings

Section	Item	Factory Default Setting
System	User Name	admin
	Password	admin
Ethernet	IP Address	192.168.25.2
	Subnet Mask	255.255.255.0
	Gateway	0.0.0.0
Wireless	RF Channel	Set by factory key.
	Tx power	14 dBm
	Encryption	Enabled / no key

Note: Factory defaults can only be restored using the CLI 'save' command. See the CLI command 4.2.5: Save *on page 39.*

5.2 Procedure to Reset AN-80i IP Address

The AN-80i features a method to gain access to the CLI commands for a unit where the IP address, username, and/or password is unknown. This method requires local access to the AN-80i PoE power adapter, the capability to power-cycle the AN-80i, a PC with a telnet client, and an Ethernet cable.

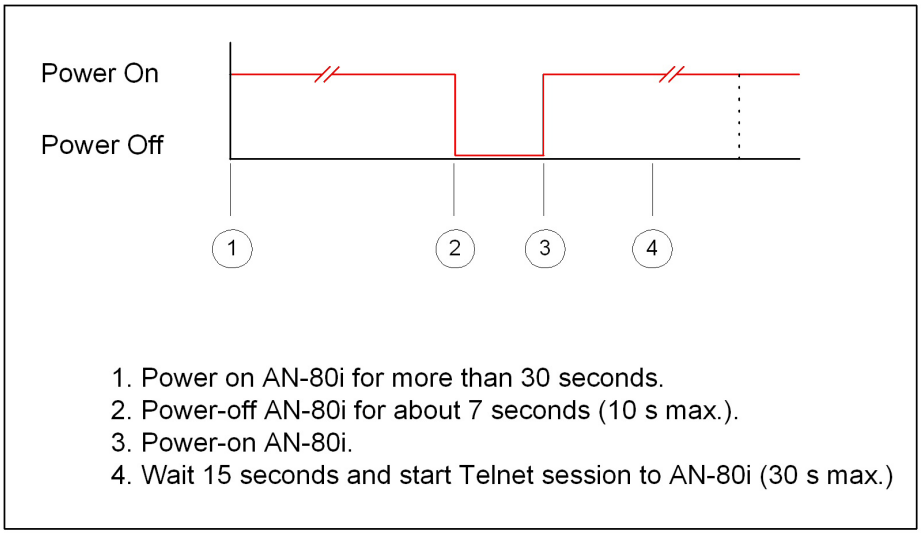

Figure 17: CLI - Recovering Lost IP Address

5.2.1 Procedure

1. Power-off the AN-80i PoE power adapter. Remove the network Ethernet cable and connect your computer directly to the PoE power adapter 'INPUT' Ethernet port (requires Cat 5e cross-over cable).
2. Open a command prompt window on the PC and enter the command:

   telnet 192.168.25.2 <Do not press Enter key at this time>
3. Power-on the AN-80i PoE power adapter for over 30 seconds.
4. Power-off the AN-80i PoE power adapter for 7 seconds.
5. Power-on the AN-80i PoE power adapter, wait 15 seconds, and then press the Enter key on the PC (to start the Telnet session). The Telnet session must connect to the AN-80i within 10 to 30 seconds from when the AN-80i starts the second time.
6. When prompted, login using 'admin' as the user name and 'admin' as password.
7. Use the following commands to save a new IP address:

   ipaddr <IP Address> <Enter>

   save config <Enter>

   If required, use the 'user' command to enter new username and password information (4.2.12 User on page 46) or the 'save' command to reset all parameters to factory default settings (4.2.5: Save on page 39).
8. Power-off the AN-80i, restore the network connections, and restore power.

5.3 Testing and Saving System Parameters

The AN-80i is a highly configurable communications device. All configurable options are saved in non-volatile RAM. The system configuration and snmp settings are saved separately.

Web Interface

The Test button is located on the System Configuration page. Click this button to have the AN-80i load the current settings displayed in the configuration screen. The AN-80i will operate with these settings for a period of five minutes. During the test period you may click the Save button at any time to save this configuration permanently (also terminating the five minute timer). After five minutes, if the Save function button has not been applied, the AN-80i will reboot and load the previously saved settings.

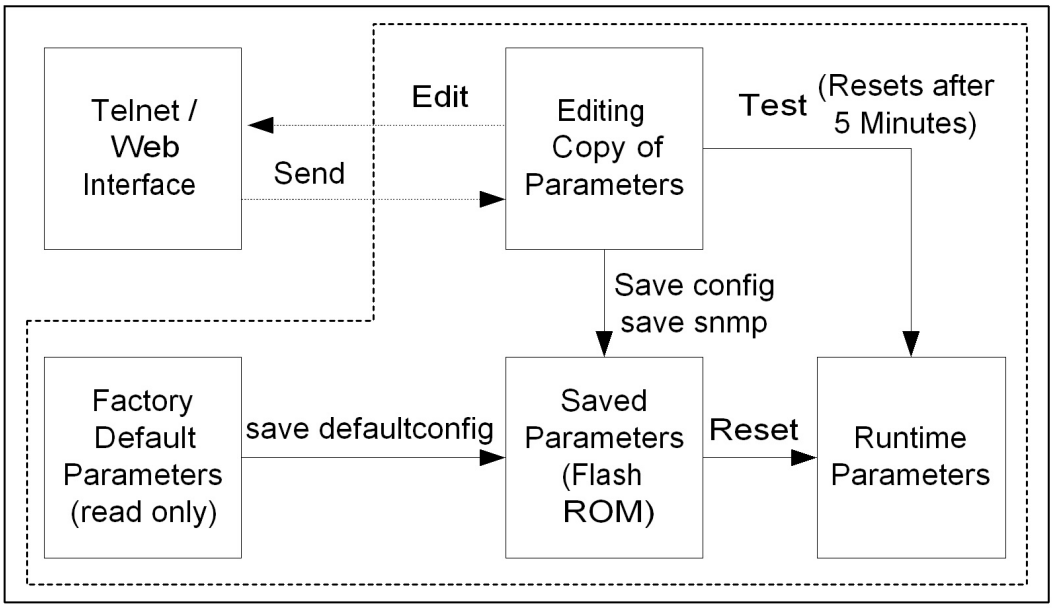

Figure 18: Diag - Saving Parameters in NVRAM

CLI Interface

Use the 'test' command to have the AN-80i load the edited settings. The AN-80i will operate with these settings for a period of five minutes. During the test period, you may click the Save button at any time to save this configuration permanently. Otherwise, after five minutes, the AN-80i will reboot and load the previously saved settings.

Note: Factory defaults can only be restored using the CLI commands.

5.4 Troubleshooting the Web Interface

The following table lists some common troubleshooting tips for the web interface.

Table 22: Diag. - Web Interface Diagnostics

Symptom	Possible Problem	Solution
General Information screen is not displayed	Incorrect IP address and/or Subnet Mask.	Perform a ping test from the host computer command line. If the ping test is unsuccessful, then the problem is with the IP address. Perform a long reset to apply the default address (192.168.25.2) and Subnet Mask (255.255.255.0)
	Problems with host computer, or AN-80i.	If the ping is successful, reset the AN-80i, and/or reset the host computer.
	Host PC ARP table is incorrectly configured	Run 'arp -d' whenever the AN-80i is swapped. Check that the subnet mask for the host PC matches the subnet mask of the AN-80i. Check that the host PC's address is 192.168.25.n, where 'n' is not equal to 0,2, or 255.

Attempt to login to the AN-80i using a Web browser. Microsoft Internet Explorer is recommended. If the AN-80i does not respond by displaying the login dialog box, check that the correct IP address is being used. The value 192.168.25.2 is the factory default value and may have been changed during installation.

Test is to verify the IP address is reachable from the computer. Use the ping command to test the connection between the AN-80i and host computer.

>ping 192.168.25.2

If the ping test is successful, the host computer was able to send and receive packets to/from the AN-80i. The problem may be with the Internet browser or related settings on the host computer. Reboot the host computer to try to resolve the problem.

If the ping is unsuccessful, there may be problems using that IP address; the IP address may be incorrect, or there may be a duplicate address. For correct operation the host computer and the AN-80i must be on the same subnet. For example, if the AN-80i is using the factory default settings, the host computer could be set for an IP of *192.168.25.3 and a subnet mask of 255.255.255.0.*

If the correct IP address of the AN-80i cannot be determined, it is recommended to perform the IP recovery procedure. See 5.2: Procedure to Reset AN-80i IP Address on page 48.

5.5 Status Codes

The AN-80i reports the following conditions using the Status Code field. See 3.3.1: System Status on page 18.

Table 23: Diag. - Status Codes

Error Type	Error # (Hexadecimal)	Description
Tx Power	0x0001	Power output is less than 10 dBm.
RF High Temp. Warning	0x0002	The transceiver internal temperature rose above 185F / 85C. The transceiver will shut down for 30 seconds to allow cooling.
RF PLL Lock Error	0x0010	The PLL (Phase Locked Loop) section within the AN-80i experienced an error. Reset the AN-80i.
PHY lock error	0x0020	The PLL (Phase Locked Loop) section within the AN-80i experienced an error. Reset the AN-80i.
80 MHz PLL lock error	0x0040	The PLL (Phase Locked Loop) section within the AN-80i experienced an error. Reset the AN-80i.
Firmware Configuration Error	0x0100	Error detected in the AN-80i configuration file.

5.6 System Log Messages

The following table provides a brief description of the key messages recorded in the logs by the system.

Table 24: Diag. - System Log Messages

Log Message	Description
1001 - System Configuration Load: OK,	System configuration values successfully read from non-volatile RAM.
2001 - System Configuration Load: ERROR,	Error occurred when attempting to read system configuration values from non-volatile RAM. Values were not loaded.
1002 - System Configuration Save: OK,	System configuration values successfully saved to non-volatile RAM.
2002 - System Configuration Save: ERROR,	Error occurred when attempting to save system configuration values to non-volatile RAM. Values were not saved.
1003 - EEPROM Directory Load: OK,	EEPROM directory values successfully read from non-volatile RAM.
2003 - EEPROM Directory Load: ERROR,	Error occurred when attempting to read EEPROM directory values from non-volatile RAM. Values were not loaded.
1004 - EEPROM Directory Save: OK,	EEPROM directory values successfully saved to non-volatile RAM.
2004 - EEPROM Directory Save: ERROR,	Error occurred when attempting to save EEPROM directory values to non-volatile RAM. Values were not saved.
1005 - User Configuration Load: OK,	User configuration values successfully read from non-volatile RAM.
2005 - User Configuration Load: ERROR,	Error occurred when attempting to read user configuration values from non-volatile RAM. Values were not loaded.
1006 - User Configuration Save: OK,	User configuration values successfully saved to non-volatile RAM.
2006 - User Configuration Save: ERROR,	Error occurred when attempting to write user configuration values to non-volatile RAM. Values were not saved.
1007 - Network Configuration Load: OK,	Network configuration values successfully read from non-volatile RAM.
2007 - Network Configuration Load: ERROR,	Error occurred when attempting to read network configuration values from non-volatile RAM. Values were not loaded.
1008 - Network Configuration Save: OK,	Network configuration values successfully saved to non-volatile RAM.
2008 - Network Configuration Save: ERROR,	Error occurred when attempting to save network configuration values to non-volatile RAM. Values were not saved.
1009 - Network Configuration: OK,	The loaded network configuration is valid.
2009 - Network Configuration: ERROR,	Error detected in the current network configuration.

Table 24: Diag. - System Log Messages	
Log Message	**Description**
1010 - Version Ctrl Data Load: OK,	Version ctrl data values successfully read from non-volatile RAM.
2010 - Version Ctrl Data Load: ERROR,	Error occurred when attempting to read version ctrl data values from non-volatile RAM. Values were not loaded.
1011 - Version Ctrl Data Save: OK,	Version ctrl data value successfully saved to non-volatile RAM.
2011 - Version Ctrl Data Save: ERROR,	Error occurred when attempting to save version ctrl data values to non-volatile RAM. Values were not saved.
1012 - System Description Load: OK,	System description data successfully read from non-volatile RAM.
2012 - System Description Load: ERROR,	Error occurred when attempting to read System description data from non-volatile RAM. Values were not loaded.
1013 - System Description Save: OK,	System description data successfully saved to non-volatile RAM.
2013 - System Description Save: ERROR,	Error occurred when attempting to write system description data to non-volatile RAM. Values was not saved.
1014 - Options Key Load: OK,	Options key value successfully read from non-volatile RAM.
2014 - Options Key Load: ERROR,	Error occurred when attempting to read Options Key value from non-volatile RAM. Values were not loaded.
1015 - Options Key Save: OK,	Options key properties successfully saved to non-volatile RAM.
2015 - Options Key Save: ERROR,	Error occurred when attempting to write Options key value to non-volatile RAM. Values was not saved.
1016 - Options Key Properties Load: OK,	Options key properties successfully read from non-volatile RAM.
2016 - Options Key Properties Load: ERROR,	Error occurred when attempting to read Options key properties from non-volatile RAM. Values were not loaded.
1017 - Options Key Properties Save: OK,	Options key value successfully saved to non-volatile RAM.
1018 - Options Key Activated: OK,	Options key value entered was valid.
1019 - Data server started,	The data server process was started successfully.
1021 - Upgrade OK,	Upload of binary file was completed successfully.
1023 - Firmware configuration OK,	The firmware configuration is valid.
1029 - HTTP(User Mgm): Chg User Attributes OK,	Parameters entered though Web interface were valid.
1030 - SNMP Configuration Load: OK,	SNMP configuration values successfully read from non-volatile RAM.

Table 24: Diag. - System Log Messages	
Log Message	**Description**
1031 - SNMP Configuration Save: OK,	SNMP configuration values successfully saved to non-volatile RAM.
2017 - Options Key Properties Save: ERROR,	An error occurred while attempting to save a new options key. The new value was not saved.
2018 - Options Key Activated: ERROR,	The options key entered is not valid for this system. Check for a typing mistake or key is for AN-80i with different MAC address.
2019 - No Options Key,	There is no options key entered on this system.
2023 - Upgrade Client Fails to Start	An error occurred while attempting to start the upgrade client. Upload operation was cancelled.
2024 - Upgrade Already in Progress,	An attempt was made to start a new upload while a binary file was already being uploaded.
2025 - Upgrade FAIL,	An error occurred while a binary file was being uploaded. Upload operation was cancelled.
2026 - Upgrade Error: Timeout	Network timeout experienced while a binary file was being uploaded. Upload operation was cancelled.
2027 - Upgrade Error:Bad Image	Uploaded binary file has a CRC error.
2028 - Factory Data Corrupted (use fallback values),	Error detected in the factory data. Read default values.
2028 - TFTP Error,	An error occurred while a binary file was being uploaded. Upload operation was cancelled.
2029 - Firmware configuration failed,	Error occurred when attempting to program the non-volatile RAM.
2034 - HTTP(User Mgm): Invalid password,	Password entered for user was not valid.
2035 - HTTP(User Mgm): Invalid User,	Username entered for user was not valid.
2036 - HTTP(User Mgm): Chg User Attributes ERROR,	Permissions entered for user were not valid.
2037 - SNMP Configuration Load: ERROR,	Error occurred when attempting to read SNMP configuration values from non-volatile RAM. Values were not loaded.
2038 - SNMP Configuration Save: ERROR,	Error occurred when attempting to save SNMP configuration values to non-volatile RAM. Values were not saved.
2039 - Invalid Options Key,	The options key entered is not of a valid format. Check for a typing mistakes.

Chapter

6

6 Appendices

6.1 System Specifications

Table 25: Spec. - AN-80i Technical Specifications	
Wireless System	
System Capability:	LOS, Optical-LOS, and Non-LOS
RF Band:	5.725 GHz to 5.850 GHz (TDD)
Center Frequency Steps:	2.5 MHz [1]
Channel Size:	10/20/40 MHz (software selectable)
RF Dynamic Range:	> 50 dB
Data Rate:	Up to 48 Mbps average Ethernet rate (20 MHz channel) [2] Up to 90 Mbps average Ethernet rate (40 MHz channel) [2]
Ave. TX Mode Power:	Max. +20 dBm (region specific)[3]
Rx Sensitivity:	-82 dBm @ 6 Mbps (based on BER of 1x10e-9)
PoE Cable:	Up to 91 m (300 ft) [4]
Network Attributes:	802.1p network traffic prioritization 802.3x Ethernet flow control Automatic link distance ranging DHCP pass-through, Transparent bridge Automatic Transmit Power Control (ATPC)
Modulation/Coding Rates:	Adaptive Modulation (bi-directional burst to burst) auto selects: 1/2 BPSK, 3/4 BPSK, 1/2 QPSK, 3/4 QPSK, 1/2 16 QAM, 3/4 16 QAM, 2/3 64 QAM and 3/4 64 QAM
Over The Air Encryption:	64-bit private key encryption
MAC:	PTP deployment, concatenation Time Division Multiple Access (TDMA) Automatic Repeat Request (ARQ) error correction Dynamic adaptive modulation (BPSK to 64 QAM)
Range:	Up to 80 km (50 mi) line-of-sight @ 48 dBm EIRP
Network Services:	Transparent to 802.3 services and applications
Duplex Technique:	Dynamic TDD (time division duplex)
Wireless Transmission:	OFDM (orthogonal frequency division multiplexing)
Network Connection:	10/100 Ethernet (RJ-45)
System Configuration:	HTTP (Web) interface, SNMP, Telnet/CLI
Network Management:	SNMP: standard and proprietary MIBs
Power Requirements:	Standard IEEE 802.3af (15.4 W Max.)
Compliance:	FCC part 15, CSA/EN/IEC/UL 60950, RSS 210
Operating Temperature:	Operating Cond.: -40 C to 60 C
Dimensions/Weight:	289 mm x 190 mm x 515 mm (11.38 in x 7.50 in x 2.03 in)
Humidity:	0% to 90% Non-condensing
Weight:	2 Kg (4.4 lb) without bracket or antenna

Table 25: Spec. - AN-80i Technical Specifications
[1] Center frequency is dependent on region. [2] Actual Ethernet data throughput is dependent on: protocols, packet size, burst rate, transmission latency, and link distance. [3] In some countries outside of North America, the maximum operational power per channel with a given antenna is limited in accordance to maximum allowable EIRP levels for the region. [4] With lightning arrestor installed. Specifications are subject to change without notice.

Table 26: Spec. - AN-80i PoE Specifications	
PoE Power Block:	CINCON Model TR60A-POE-L
Input:	Auto-sensing 110/220/240 VAC 50/60 Hz
Output:	Standard IEEE 802.3af

6.2 Antenna and Power Specifications

This device has been designed to operate with the antennas listed below, and having a maximum gain of 34.6 dB. Antennas having a gain greater than 34.6 dB are strictly prohibited for use with this device. The required antenna impedance is 50 ohms.

The following table lists FCC and IC certified antennas:

Table 27: Spec. - Antenna Power Specifications

Redline PN	Ant. Gain (dBi)	Antenna Type	App.	Minimum Conducted Power (dBm)	Max Conducted Power Ratings (dBm)	Average GUI Power Display (dBm)	FCC Max EIRP (dBm)
48-00021-02	22	9 Degree 5.15-5.875 GHz Directional Flat Panel	PTP	-12.7	26.2	20	No Limit
48-00030	22	12 Degree 5.250-5.850 GHz Directional Parabolic	PTP	-12.7	26.2	20	No Limit
48-00024	28	4.5 Degree 5.15-5.875 GHz Directional Flat Panel	PTP	-12.7	26.2	20	No Limit
48-00031	28	6.2 Degree 5.250-5.850 GHz Directional Parabolic	PTP	-12.7	26.2	20	No Limit
48-00032	31.2	4.2 Degree 5.250-5.850 GHz Directional Parabolic	PTP	-12.7	26.2	20	No Limit
48-00033	34.6	3.4 Degree 5.250-5.850 GHz Directional Parabolic	PTP	-12.7	26.2	20	No Limit

***Note**: The RF output power and selection must be professionally programmed and installed by the manufacturer or a trained professional installer for compliance with FCC requirements of maximum EIRP of 34.6 dBm.*

6.3 Glossary Of Terms

Term	Definition
Antenna Gain	The measure of antenna performance relative to a theoretical antenna called an isotropic antenna.
ARQ	Automatic Repeat Request. This is the protocol used over the air for error correction.
ATPC	Automatic Transmission Power Control. The master-end system automatically adjusts the RF transmit level of both systems to optimize performance of the link (match a target RSSI value).
Beamwidth	The angle of signal coverage provided by an antenna.
BFW	Broadband Fixed Wireless
Bps	Bits Per Second A unit of measurement for the rate at which data is transmitted.
BPSK	Binary Phase Shift Keying.
Channel	A communications path wide enough to permit a single RF transmission.
dB	A ratio expressed in decibels.
dBi	A ratio, measured in decibels, of the effective gain of an antenna compared to an isotropic antenna.
dBm	Decibels above a milliwatt
DFS	Dynamic Frequency Selection (DFS) can detect interference from other devices using the same frequency (especially radar) and automatically take a pre-selected action such as disable transmission or relocate transmission to alternative frequency.
DHCP	Dynamic Host Configuration Protocol. A DHCP server automatically issues IP addresses within a specified range to devices on a network.
Directional Antenna	An antenna that concentrates transmission power into one direction.
Encryption	For the purposes of privacy, the transformation of data into an unreadable format until reformatted with a decryption key.
Ethernet	A LAN architecture using a bus or star topology
FD	Full Duplex. Refers to the transmission of data in two directions simultaneously (i.e. a telephone)
FWA	Fixed Wireless Access
Gain	The ratio of the output amplitude of a signal to the input amplitude of a signal. Typically expressed in decibels (dB).
Gateway	A network point that acts as an entrance to another network.
GHz	Gigahertz. 1,000,000,000 Hz, or 1,000 MHz
GUI	Graphical User Interface
IP	Internet Protocol. See TCP/IP.
Isotropic	A theoretic construct of an antenna that radiates its signal 360 degrees both vertically and horizontally—a perfect sphere. Generally used as a reference.
IXC	Inter-exchange Carrier. A long-distance phone company.
LEC	Local Exchange Carriers. The traditional local wired phone company.
LED	Light Emitting Diode
LOS	Line Of Sight. A clear direct path between two antennas, with no

Term	Definition
	obstructions within the first Fresnel zone.
MAC	Media Access Control. A unique number assigned to a network device. Corresponds to ISO Network Model Layer 2 data link layer.
MHz	Megahertz. 1,000,000 Hz
Modem	MOdulator/DEModulator. A hardware device that converts digital data into analog and vice versa.
Modulation	Any of several techniques for combining user information with a transmitter carrier signal.
Multipath	The radio echoes created as a radio signal bounces off objects.
NVRAM	Non-volatile RAM. System parameters are stored in NVRAM. This data is not affected by powering off the system.
NLOS	Non Line Of Sight. Completely obstructed path between two antennas.
OFDM	Orthogonal Frequency Division Multiplexing. OFDM spreads data to be transmitted over a large number of orthogonal carriers.
OLOS	Optical Line Of Sight. A clear direct path between two antennas, with obstructions within the first Fresnel zone.
Packet	A bundle of data organized in a specific way for transmission. The three principal elements of a packet include the header, the text, and the trailer (error detection and correction bits).
PHY	Physical Layer. Provides for the transmission of data through a communications channel by defining the electrical, mechanical, and procedural specifications.
PMP	Point to Multipoint
PTP	Point to Point
QAM	Quadrature Amplitude Modulation
QPSK	Quadrature Phase Shift Keying
Receiver Sensitivity	A measurement of the weakest signal a receiver can receive and still correctly translate it into data.
RF	Radio Frequency
Rx	Receiver
S/N	Signal to Noise Ratio
SINADR	Signal to noise and distortion ratio.
TCP/IP	Transmission Control Protocol/Internet Protocol The standard set of protocols used by the Internet for transferring information between computers, handsets, and other devices.
TFTP	Trivial File Transfer Protocol
Tx	Transmitter
UBR	Uncoded Burst Rate

302 Town Centre • Suite 100 • Markham, Ontario • Canada • L3R 0E8

www.redlinecommunications.com