duraflame

MODEL / MODELO / MODÈLE:
20HM6007-C240

INSERT MODEL / MODELO INSERTO / MODÈLE IPOÊLE:
20QI071ARA

Español P.12

Français P.22

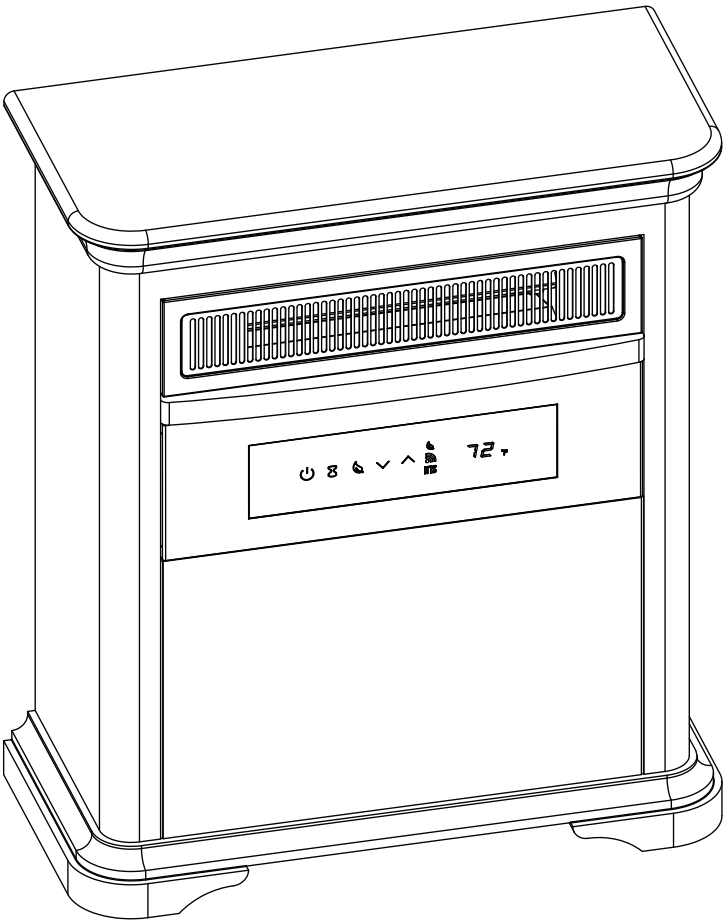

www.tsicustomerservice.com

1-800-318-9373

TWIN-STAR INTERNATIONAL HOME FURNISHINGS

Twin-Star International, Inc; Delray Beach, FL 33445
Made in China • Printed in China • Fabricado en China • Impreso en China • Fabriqué en China • Imprimé en Chine

GETTING STARTED

1. The serial number is located on the back of the heater, the serial number is necessary for product warranty registration and customer service.

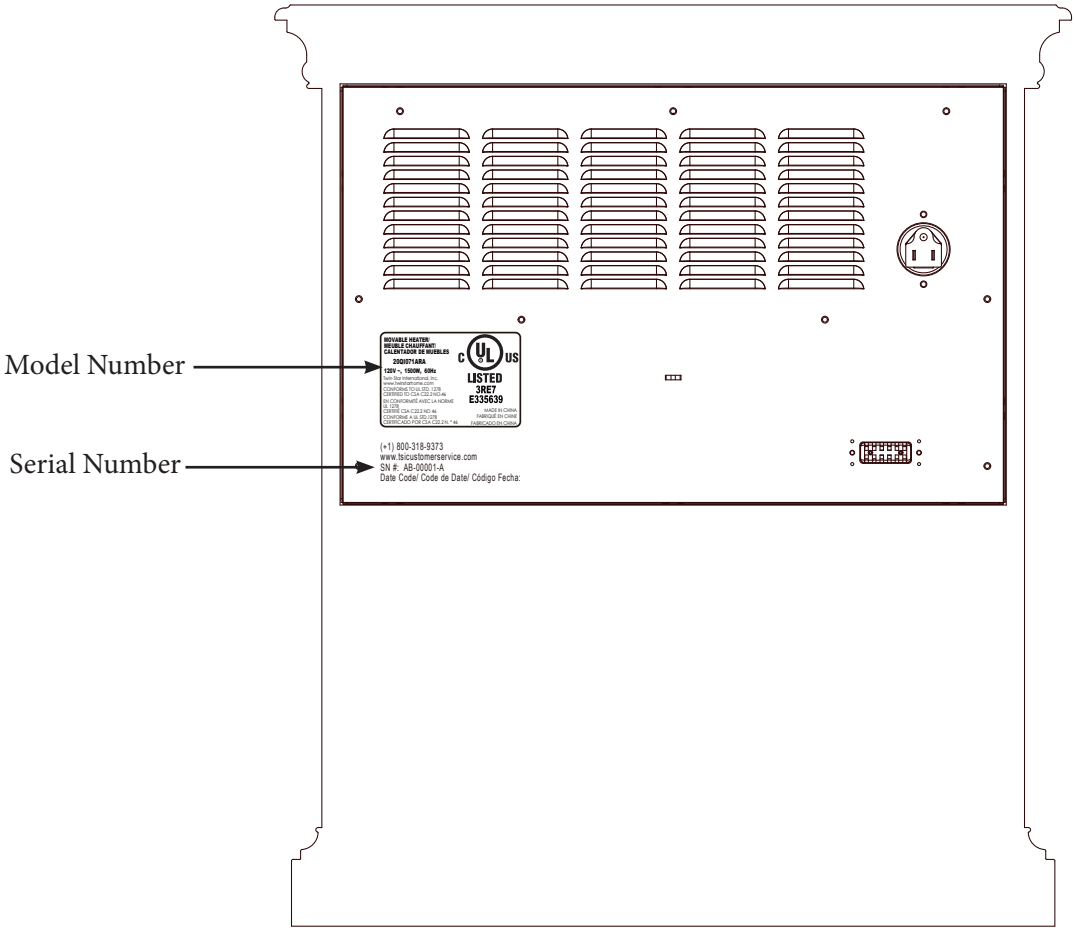

2 . Go to www.tsicustomerservice.com for product warranty registration. For registration use the **MODEL NUMBER: 20QI071ARA.** If you are unable to complete registration save your proof of purchase for warranty purposes.

3. **CONNECT TO THE IRIS™ SMART HOME PLATFORM**
As an option, the 20HM6007 heater is designed to work with an Iris™ smart home system. With Iris™ you can remotely control the heater, set custom schedules, and receive safety notifications from your mobile device.

To get started, download the Iris app from either the App Store (iOS) or from Google Play (Android) and create an account. Once in your Iris account, click the "+" icon in the upper right hand corner, select the Duraflame heater from the list and follow the in-app instructions to connect your heater.

Please note the Iris hub is required to connect to the Iris™ system.

PRODUCT SPECIFICATIONS

VOLTAGE	120VAC, 60 Hz
AMPS	12.5 Amps
WATTS	1500 Watts

IMPORTANT INSTRUCTIONS

When using electrical appliances, basic precautions should always be followed to reduce the risk of fire, electrical shock, and injury to persons including the following:

1. Read all instructions before using this appliance.

2. This appliance is hot when in use. To avoid burns, do not let bare skin touch hot surfaces. If provided, use handles when moving this appliance. Keep combustible materials, such as furniture, pillows, bedding, papers, clothes and curtains at least 3 feet (0.9 m) from the front of this appliance and keep away from the sides and the rear.
   WARNING: In order to avoid overheating, do not cover the heater.

3. CAUTION: Never leave the heater operating unattended. Extreme caution is necessary if unsupervised children or invalids are nearby.

4. The appliance is not to be used by children or persons with reduced physical, sensory or mental capabilities, or lack of experience and knowledge, unless they have been given supervision or instruction.

5. Always unplug this appliance when not in use.

6. Do not operate any heater with a damaged cord or plug or after the appliance malfunctions, or if it has been dropped or damaged in any manner.

7. If the supply cord is damaged, it must be replaced by the manufacturer, its service agent or similarly qualified persons in order to avoid a hazard.

8. Do not use outdoors.

9. This heater is not intended for use in bathrooms, laundry areas and similar indoor locations. Never locate this appliance where it may fall into a bathtub or other water container.

10. Do not run cord under carpeting. Do not cover cord with throw rugs, runners or the like. Arrange cord away from traffic areas and where it will not be tripped over.

11. To disconnect this appliance, turn controls to the off position, then remove plug from outlet.

12. Connect to properly grounded outlets only. This heater is for use on 120 volts. The cord has a plug as shown at A in Fig.1. Do not use a 2 prong adapters. Never use with an extension cord or relocatable power tap (outlet/power strip).

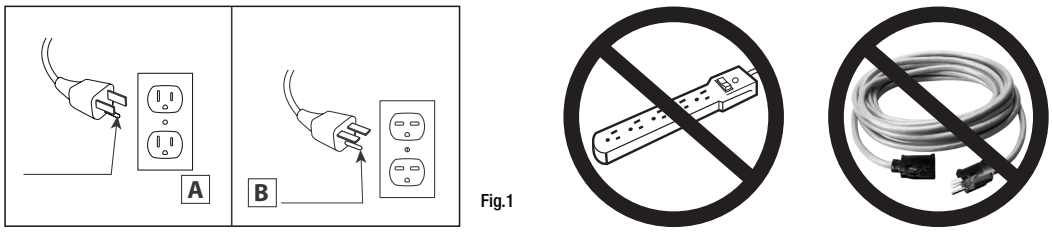

Fig.1

13. This appliance, when installed, must be electrically grounded in accordance with local codes or, in the absence of local codes, with the current CSA C22.1 Canadian Electrical Code or for U.S.A. installations, follow local codes and the National Electrical Code, ANSI/NFPA NO.70.

14. Do not insert or allow foreign objects to enter any ventilation or exhaust opening as this may cause an electric shock or fire, or damage the appliance.

15. To prevent a possible fire, do not block air intakes or exhaust in any manner. Do not use on soft surfaces, like a bed, where opening may become blocked.

16. This appliance has hot and arcing or sparking parts inside. Do not use it in areas where gasoline, paint or flammable liquids are used or stored. This heater should not be used as a drying rack for clothing. Christmas stockings or decorations should not be hung in the area of it.

17. Use this appliance only as described in the manual. Any other use not recommended by the manufacturer may cause fire, electric shock or injury to persons.

18. CAUTION: Do not sit or stand on the heater; the heater may become unstable.

19. This heater may include a visual alarm to warn that parts of the heater are getting excessively hot. If the alarm flashes immediately turn the heater off and inspect for any objects on or adjacent to the heater that may cause high temperatures.
    DO NOT OPERATE THE HEATER WITH THE ALARM FLASHING!

SAVE THESE INSTRUCTIONS

OPERATION INSTRUCTIONS

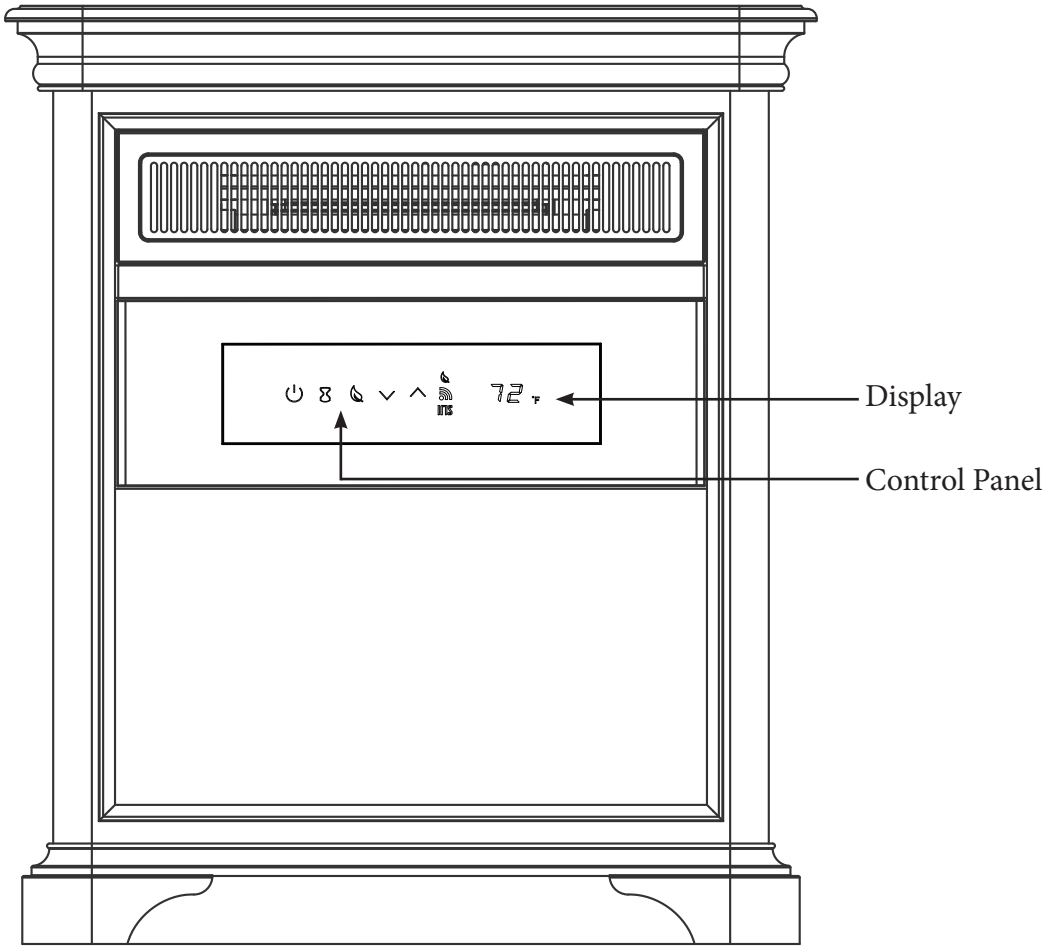

The heater can be operated by either the remote control or the control panel.

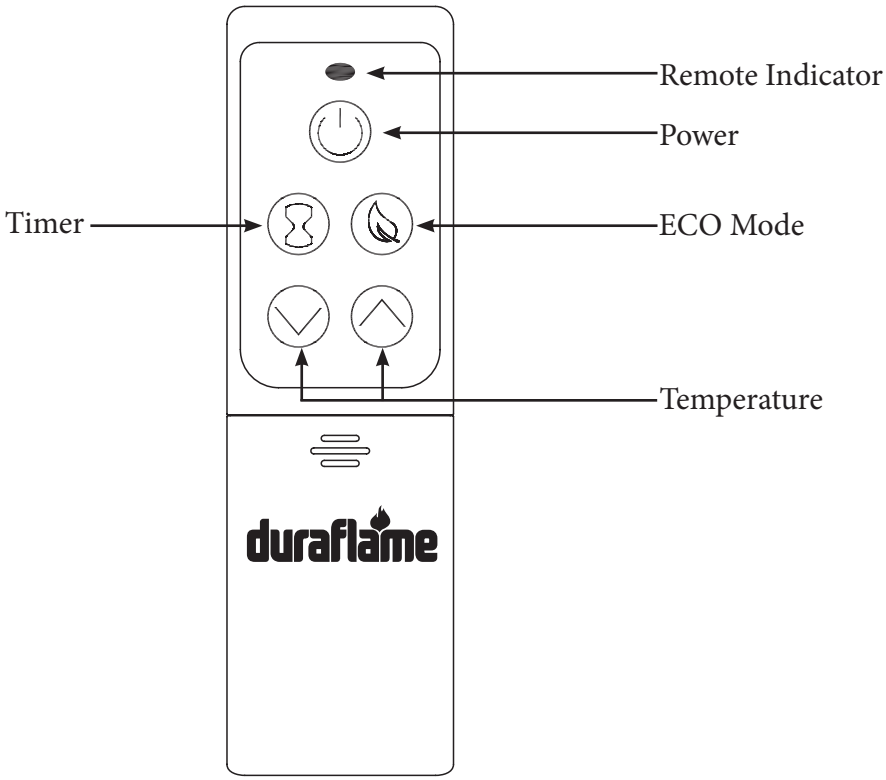

OPERATION INSTRUCTIONS

FUNCTION	ICON	DESCRIPTION
POWER		The power button supplies power to all of the functions of the fireplace. The power button will put the insert in a standby mode. This will turn off all functions at once but will hold the settings in the memory. By pressing the Power button again the unit will turn on at the same settings. To change between °F and °C press and hold the POWER button on the control panel for 3 seconds.
TIMER		Press TIMER button will turn on or off timer settings. There are 10 timer settings and OFF that can be selected. OFF(00), 30min, 1Hour, 2H, 3H, 4H, 5H, 6H, 7H, 8H, 9H.
SETTING TEMPERATURE	∨ ∧	When pressing the up and down ∨ ∧ buttons the display will enter temperature setting mode. When in temperature setting mode pressing the ∨ ∧ buttons will change the thermostat by 1 °F (1 °C.) The temperature setting range is between 50 °F - 97 °F (10 °C - 36 °C). After 10 seconds without control input the display will exit temperature setting mode and show the current ambient temperature.
ECO MODE		Pressing this button will turn on/ off the ECO setting. When enabled ECO Mode will use less energy when running to maintain warmth.
COOL DOWN CYCLE		After the heater has ran the fan will continue to run for a period of time to cool down the internal parts.

OPERATION INSTRUCTIONS

FUNCTION	ICON	DESCRIPTION
SAFER PLUG		This product is equipped with a safer Plug; an advanced safety device that helps detect electrical fires caused from faulty outlets. Overloading of outlet, adapters and surge protectors may cause overheating, damage, and increase risk of fires. Safer Plug continuously monitors the temperature in the plug and outlet and will turn off the heater to prevent unsafe outlet overheating. If the Safer Plug cuts the power due to unsafe conditions it will show an "Er"message on the screen. If this occurs the Safer Plug has prevented a potentially unsafe condition. To reset the device if this occurs, first allow the plug to cool down. Once the plug has cooled down, unplug the device and wait 5 seconds, then plug back in and continue to use normally. If the Safer Plug continues to activate your outlet may be faulty. Check your heater cord and plug connections. Faulty wall outlet connections or loose plugs can cause the outlet or plug to overheat. Be sure the plug fits tight in the outlet. Heaters draw more current than small appliances, overheating of the outlet may occur even if it has not occurred with the use of other appliances. During use check frequently to determine if your plug outlet or faceplate is HOT! If so, discontinue use of the heater and have a qualified electrician check and/or replace the faulty outlet(s).
SAFER SENSOR SAFER sensor™ FIRE PREVENTION TECHNOLOGY		This product is equipped with a Safer Sensor; an advanced safety device that helps prevent heaters from being accidently covered or blocked causing a potentially unsafe condition. The SAFER SENSOR detects if an object is too close to the front of the heater potentially obstructing the air outlet. If blocked, the SAFER SENSOR icon on the control panel will flash, the heater will beep continuously, and then shut off. Once the object has been moved, the icon will stop flashing, the beeping will cease, and the heater will turn back on. To disable the Proximity Sensor safety function press and hold the ECO MODE button for 10 seconds. Once disabled the SAFER SENSOR icon will remain lit indicating it is disabled. Repeat this step to re-enable the function.

TROUBLESHOOTING

Problem	Root Cause	Corrective Action
Display shows " E 1 "	The thermostat sensor is broken or disconnected.	Unplug the heater, remove the back panel of the heater and check that the thermostat is plugged into the main circuit board. If this does not solve the problem contact customer service.
Display shows " E2 "	The thermostat sensor is broken.	Contact customer service.
Display shows " E3 "	Manual Reset overheat protection has triggered.	Inspect the heater and check that the air inlets and outlets are not blocked as this may cause overheating. Unplug the heater for 30 minutes and allow it to cool down. Replug and operate, monitor the heater for signs of overheating, if the problem persist discontinue use of the heater and contact customer service.
Display shows " Er "	Power cord overheating protection has activated.	Check your heater cord and plug connections. Faulty wall outlet connections or loose plugs can cause the outlet or plug to overheat. Be sure the plug fits tight in the outlet. Heaters draw more current than small appliances, overheating of the outlet may occur even if it has not occurred with the use of other appliances. During use check frequently to determine if your plug outlet or faceplate is HOT! If so, discontinue use of the heater and have a qualified electrician check and/or replace the faulty outlet(s).
Beeping Sound.	The heater air outlet is blocked.	Check that nothing is in front of the the heater air outlet by at least 3 feet (0.9m).
		Press and hold the ECO Mode button on the control panel for 10 seconds to detective the Safer Sensor.
Heater does not blow warm air.	Cool down cycle	Normal operation, will continue to run for several minutes before shutting down. Times will vary based on temperatures. During this time cool air will blow.
	Not reaching set temperature.	Perform a master reset; turn off and unplug unit. Hold down main power button on the unit itself. Continue to hold button down while plugging unit back in. Once unit is plugged back in continue to hold button for 5 seconds and then release. Turn unit back on and temperature should flash 72 degrees then display the ambient room temperature.
	Not reaching set temperature.	Unit is designed to be used as a supplemental heat source in conjunction with a primary heat source.
The heater is taking a long time to reach desired room temperature.	Improper use of unit	Unit is designed to be used as a supplemental heat source in conjunction with a primary heat source.
	Location	Your unit should always be positioned on an inside wall with proper insulation. The heater provides supplemental heating for up to 1000 sq/ft in conjunction with a primary heat source.
	Location	The back and side of the heater should be greater than 6 inches away from objects for proper air intake.
	Use of surge protector/ extension cord.	Plug unit directly into the wall outlet.
Temperature will not change.	Defective control panel circuit board.	Replace control panel circuit board.
Heater does not turn on but other functions work fine.	Manual reset needed	Turn the POWER to "OFF" and unplug the unit from the wall outlet for 30 minutes. After 30 minutes plug the unit back into wall outlet, and operate as normal. If the problem persist contact customer service.
Buttons do not work.	Defective control panel circuit board.	Replace control panel circuit board.
Control panel does not illuminate.	Defective control panel circuit board.	Replace control panel circuit board.
How many quartz heating elements are in my unit?	20QI product Inquiry.	3 Infrared Quartz heating elements.
Remote control is not working when buttons are pressed.	No batteries or battery power.	Change the remote batteries.
	poor signal	Operate remote transmitter at a slow measured pace. Press the remote control buttons with an even motion and gentle pressure. Repeatedly pressing buttons in rapid succession may cause the transmitter to malfunction.
	Distance	Operate the remote at a distance less than 20 feet from the front of the appliance; point the remote at the control panel.

TROUBLESHOOTING

Problem	Root Cause	Corrective Action
Iris indicator light double flashing.	In pairing mode.	Follow the pairing instructions in getting started or choose to not pair to an Iris hub. After 10 minutues the pairing mode will stop.
Iris indicator light not lit.	No longer pairing.	To begin pairing again unplug the heater then plug back in and it will be in pairing mode for 10 minutes.
How to remove from the Iris network?	Not applicable.	This is done by the user through the Iris website: With ZigBee devices, this is accomplished by a customer clicking “Remove Device” from the Iris website. The Iris hub sends a message to the device to remove itself from the network, and the device is removed from the memory of the Iris hub. No physical action is required on the device to remove it from the network.

CARE AND MAINTENANCE

- Clean the trim using a soft cloth, slightly dampened with citrus oil based product and buff with a clean soft cloth.
- DO NOT use brass polish or household cleaners as these products will damage the metal trim. Citrus oil based products can be obtained at supermarkets or hardware stores.
- WARNING: Electrical outlet wiring must comply with local building codes and other applicable regulations to reduce the risk of fire, electrical shock and injury to persons.
- Warning: Disconnect power before attempting any maintenance or cleaning to reduce the risk of fire, electrical shock or personal injury.

PARTS LIST

Part	Part Name	Part Number
1	Control Panel Circuit Board	Y15-S173-P32
2	Main Circuit Board	Y15-S173-P15
3	Remote Control	P118

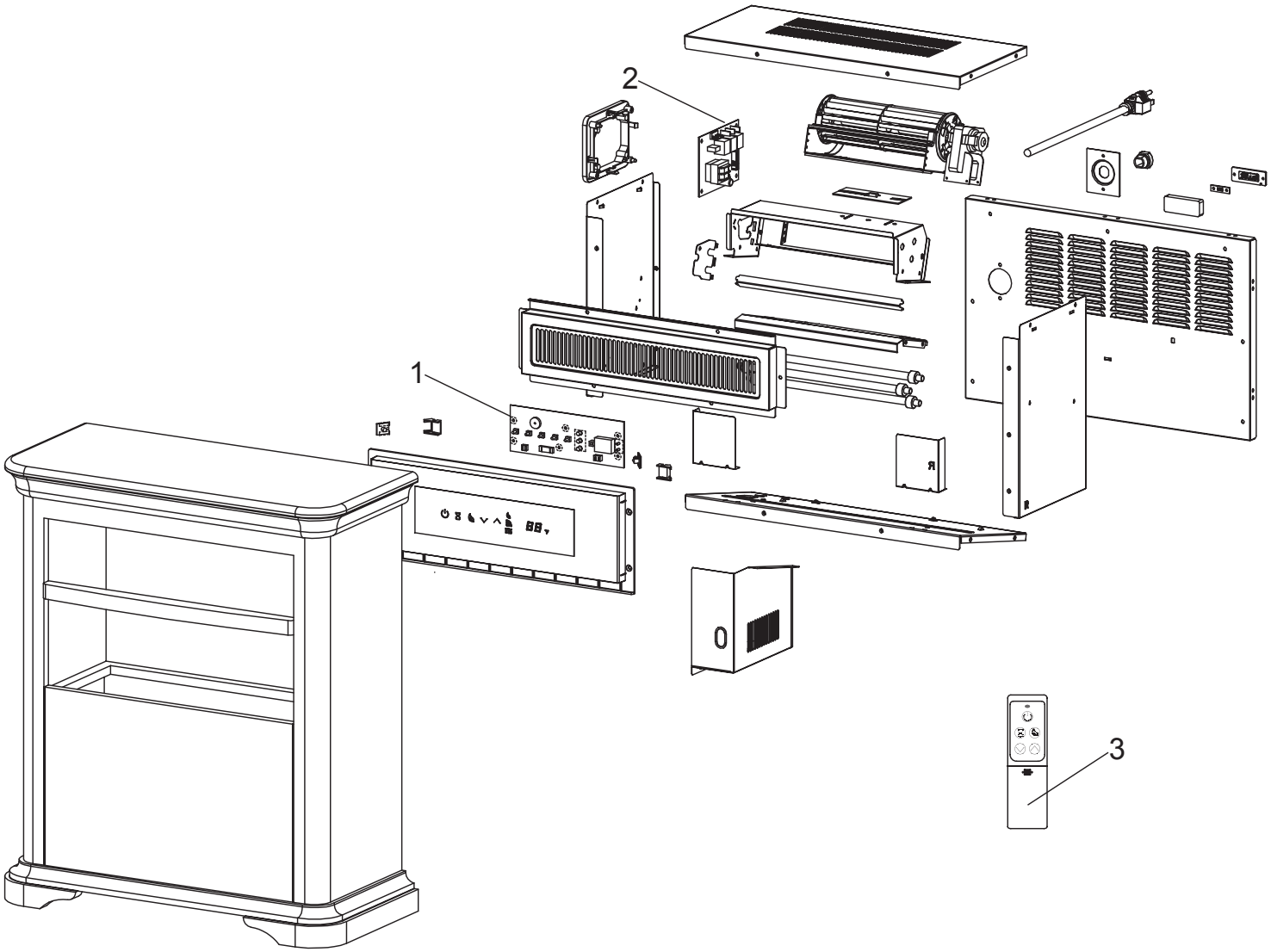

FCC/IC INFORMATION

Warning: Changes or modifications to this unit not expressly approved by the party responsible for compliance could void user's authority to operate the equipment.

NOTE: This equipment has been tested and found to comply with the limits for Class B digital device, pursuant to part 15 of the FCC Rules. These limits are designed to provide reasonable protection against harmful interference in a residential installation. This equipment generates, uses, and can radiate radio frequency energy and, if not installed and used in accordance with the instructions, may cause harmful interference to radio communications.
However, there is no guarantee that interference will not occur in a particular installation. If this equipment does cause harmful interference to radio or television reception, which can be determined by turning the equipment off and on, the user is encouraged to try to correct the interference by one or more of the following measures:

- Reorient or relocate the receiving antenna.
- Increase the separation between the equipment and the receiver.
- Connect the equipment into an outlet on a circuit different from that to which the receiver is connected.
- Consult the dealer or an experienced radio/TV technician for help.

This device complies with Part 15 of the FCC Rules. Operation is subject to the following two conditions:

(1) This device may not cause harmful interference, and
(2) this device must accept any interference received, including interference that may cause undesired operation.

This Class B digital apparatus complies with Canadian ICES-003.

The device must not be co-located or operating in conjunction with any other antenna or transmitter.
To comply with FCC's RF radiation exposure limits for general population/uncontrolled exposure, this device must be installed to provide a separation distance of at least 20cm from all persons.

BATTERY REPLACEMENT

NOTE: Do not mix old and new batteries.
Do not mix alkaline, standard (carbon zinc), or rechargable (nicad, nimh, etc.) batteries.

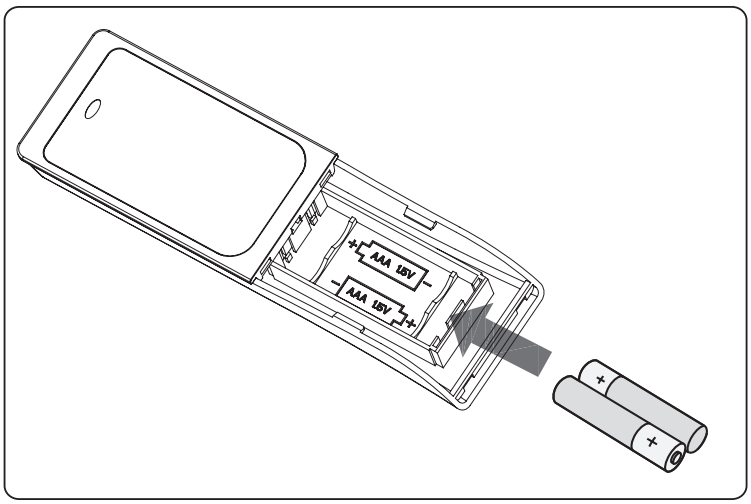

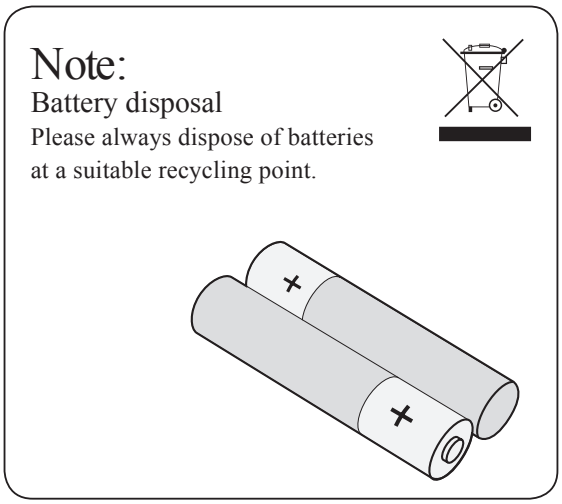

CAUTION:
- Do not ingest batteries.
- Non-rechargeable batteries are not to be recharged.
- Batteries are to be inserted with the correct polarity.
- Exhausted batteries are to be removed from the product.

- Always purchase the correct size and grade of battery most suitable for the intended use.
- Replace all batteries of a set at the same time.
- Clean the battery contacts and also those of the device prior to battery installation.
- Remove used batteries promptly.

3-YEAR LIMITED WARRANTY

The manufacturer warrants that your new Electric Heater is free from manufacturing and material defects for a period of three years from date of puchase, subject to the following conditions and limitations.

1. Install and operate this Electric Appliance in accordance with the installation and operating instructions furnished with the product at all times. Any unauthorized repair, alteration, willful abuse, accident, or misuse of the product shall nullify this warranty.

2. This warranty is non-transferable, and is made to the original owner, provided that the purchase was made through an authorized supplier of the product.

3. The warranty is limited to the repair or replacement of part(s) found to be defective in material or workmanship, provided that such part(s) have been subjected to normal conditions of use and service, after said defect is confirmed by the manufacturer's inspection.

4. The manufacturer may, at its discretion, fully discharge all obligations with respect to this warranty by refunding the wholesale price of the defective part(s).

5. Any installation, labor, construction, transportation, or other related costs/expenses arising from defective part(s), repair, replacement, or othe wise of same, will not be covered by this warranty, nor shall the manufacturer assume responsibility for same.

6. The owner/user assumes all other risks, if any, including the risk of any direct, indirect or consequential loss or damage arising out of the use, or inability to use the product,except as provided by law.

7. All other warranties – expressed or implied –with respect to the product, its components and accessories, or any obligations/liabilities on the part of the manufacturer are hereby expressly excluded.

8. The manufacturer neither assumes, nor authorizes any third party to assume on its behalf, any other liabilities with respect to the sale of the product.

9. The warranties as outlined within this document do not apply to non accessories used in conjunction with the installation of this product.

10. This warranty gives you specific legal rights, and you may also have other rights which vary from state to state.

This warranty is void if:

a. The Heater is subjected to prolonged periods of dampness or condensation.
b. Any unauthorized alteration, willful abuse, accident, or misuse of the product.
c. You do not have the original receipt of purchase.

CUSTOMER SERVICE

www.tsicustomerservice.com
For Customer Service Call 1-800-318-9373

Questions? Our experts are standing by assist you at our Toll-Free help line, we can help you with assembly, and, if necessary replace damaged/missing parts. Assistance is available 7 days a week/24 hours a day/365 days per year.

IMPORTANT:
Before contacting Customer Service please have this information available:

- Serial Number
- Model Number
- Sales Receipt or Proof of Purchase