FCC PART 15 SUBPART C MEASURMENT AND TEST REPORT

For

Twin-Star International Inc.

12/F Taiwanese Trade Association Building, De Zheng Road, ChangAn Town, Dongguan City, China

E.U.T.: WIRELESS SUBWOOFER ADAPTER

Model Name: BDSW-ADP-100

Brand Name: bell'odigital

FCC ID: QCD-BDSW-1650

Report Number: NTC1508196F

Test Date(s): August 31, 2015 to September 29, 2015

Report Date(s): September 29, 2015

Prepared by

Dongguan Nore Testing Center Co., Ltd.

Building D, Gaosheng Science and Technology Park, Hongtu Road, Nancheng District,Dongguan City, Guangdong, China

Tel: +86-769-22022444 Fax: +86-769-22022799

Prepared By	Approved & Authorized Signer
Rose Hu / Engineer	Sunm Lv / Q.A. Director

Note: This test report is for the customer shown above and their specific product only. It may not be duplicated or used in part without prior written consent from Dongguan NTC Co., Ltd. The test results referenced from this report are relevant only to the sample tested.

Table of Contents

1. GENERAL INFORMATION 3

1.1 PRODUCT DESCRIPTION FOR EQUIPMENT UNDER TEST 3
1.2 RELATED SUBMITTAL(S) / GRANT (S) 4
1.3 TEST METHODOLOGY 4
1.4 EQUIPMENT MODIFICATIONS 4
1.5 SUPPORT DEVICE 4
1.6 TEST FACILITY AND LOCATION 4
1.7 SUMMARY OF TEST RESULTS 5

2. SYSTEM TEST CONFIGURATION 6

2.1 EUT CONFIGURATION 6
2.2 SPECIAL ACCESSORIES 6
2.3 DESCRIPTION OF TEST MODES 6
2.4 EUT EXERCISE 6

3. CONDUCTED EMISSIONS TEST 7

3.1 TEST SET-UP (BLOCK DIAGRAM OF CONFIGURATION) 7
3.2 TEST CONDITION 7
3.3 MEASUREMENT RESULTS 7

4. RADIATED EMISSION TEST 10

4.1 TEST SET-UP (BLOCK DIAGRAM OF CONFIGURATION) 10
4.2 MEASUREMENT PROCEDURE 11
4.3 LIMIT 12
4.4 MEASUREMENT RESULTS 13

5. 20DB BANDWIDTH 17

5.1 MEASUREMENT PROCEDURE 17
5.2 TEST SET-UP (BLOCK DIAGRAM OF CONFIGURATION) 17
5.3 MEASUREMENT RESULTS 17

6. BAND EDGE 19

6.1 MEASUREMENT PROCEDURE 19
6.2 LIMIT 19
6.3 MEASUREMENT RESULTS 19

7. ANTENNA REQUIREMENT 20

7.1 MEASUREMENT PROCEDURE 20
7.2 MEASUREMENT RESULTS 20

8. TEST EQUIPMENT LIST 21

1. GENERAL INFORMATION

1.1 Product Description for Equipment under Test

This device is a WIRELESS SUBWOOFER ADAPTER, it's DC 5V powered by USB Port. For more details features, please refer to User's Manual.

Manufacturer	:	Zhongshan Senjia Electrical Appliances Co., Ltd.
Address	:	No.35, Wenming Road, Nanqu, Zhongshan, Guangdong, China
Factory	:	Zhongshan Senjia Electrical Appliances Co., Ltd.
Address	:	No.35, Wenming Road, Nanqu, Zhongshan, Guangdong, China
Frequency range:	:	2403MHz
Modulation	:	GFSK
Number of Channel	:	1
Antenna Type	:	PCB
Antenna Gain	:	0dBi (declaration by manufacturer)
Power Supply	:	AC 120V 60Hz (Adapter Input)
Model name	:	BDSW-ADP-100
Model Difference Description	:	N/A
Note:	:	N/A

1.2 Related Submittal(s) / Grant (s)

This submittal(s) (test report) is intended for FCC ID: QCD-BDSW-1650 filing to comply with Section 15.249 of the FCC Part 15 (2014), Subpart C Rule.

1.3 Test Methodology

Both AC mains line-conducted and radiated emission measurements were performed according to the procedures in ANSI C63.10 (2013). Radiated emission measurement was performed in semi-anechoic chamber and conducted emission measurement was performed in shield room. For radiated emission measurement, preliminary scans were performed in the semi-anechoic chamber only to determine the worst case modes. All radiated tests were performed at an antenna to EUT distance of 3 meters.

1.4 Equipment Modifications

Not available for this EUT intended for grant.

1.5 Support Device

Adapter	:	Manufacturer: Kinga Electronics Co., Ltd. Model: FLD0710-5.0V1.00A-Z Input: AC 100-240V 50/60Hz, 0.3A Output: DC 5.0V 1.5A

1.6 Test Facility and Location

Listed by FCC, August 02, 2011
The Certificate Registration Number is 665078.
Listed by Industry Canada, July 01, 2011
The Certificate Registration Number is 9743A-1.

Dongguan NTC Co., Ltd.
(Full Name: Dongguan Nore Testing Center Co., Ltd.)

Building D, Gaosheng Science and Technology Park, Hongtu Road,
Nancheng District, Dongguan City, Guangdong, China
(Full Name: Building D, Gaosheng Science & Technology Park,
Zhouxi Longxi Road, Nancheng District, Dongguan, Guangdong, China.

1.7 Summary of Test Results

FCC Rules	Description Of Test	Result
§15.249(a)/ 15.209	Radiated Emissions	Compliant
§15.249(d)/ 15.205	Band Edge	Compliant
§15.215(c)	20dB Bandwidth	Compliant
§15.203	Antenna Requirement	Compliant
§15.207	Conduction Emissions	Compliant

2. System Test Configuration

2.1 EUT Configuration

The EUT configuration for testing is installed on RF field strength measurement to meet the Commissions requirement and operating in a manner which intends to maximize its emission characteristics in a continuous normal application.

2.2 Special Accessories

Not available for this EUT intended for grant.

2.3 Description of test modes

The EUT has been tested under operating condition.

2.4 EUT Exercise

The EUT was operated in the engineering mode to fix the Tx frequency that was for the purpose of the measurements.

3. Conducted Emissions Test

3.1 Test SET-UP (Block Diagram of Configuration)

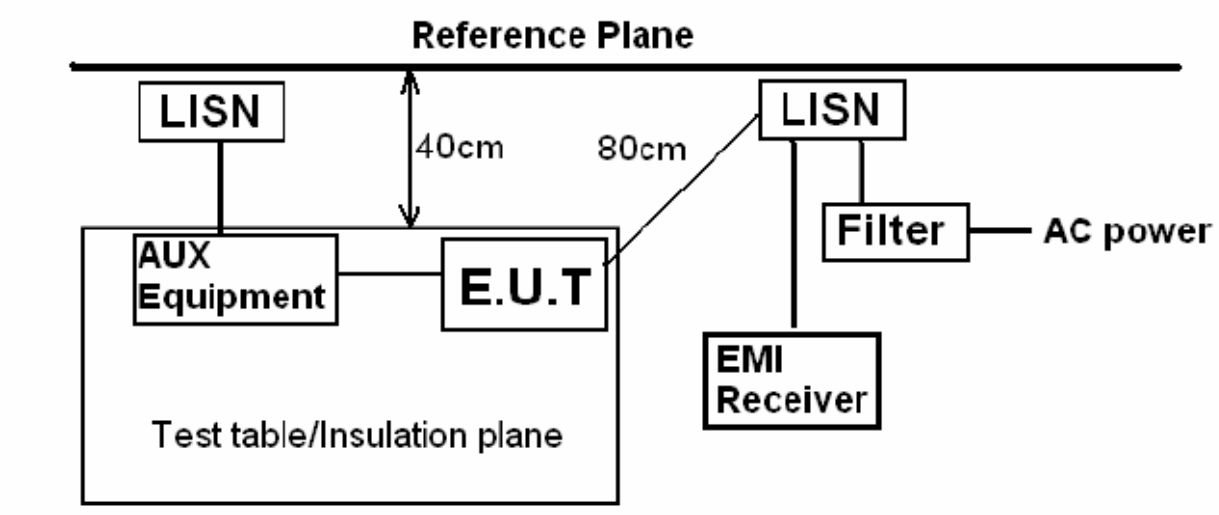

3.2 Test Condition

Test Requirement: FCC Part 15.207

Frequency Range: 150KHz ~ 30MHz

Detector: RBW 9KHz, VBW 30KHz

Operation Mode: TX

3.3 Measurement Results

Please refer to following plots.

Dongguan NTC Co., Ltd.
Tel: +86-769-22022444 Fax: +86-769-22022799
Web: Http://www.ntc-c.com

Site: Conduction

Test Time: 2015-9-14 9:21:05

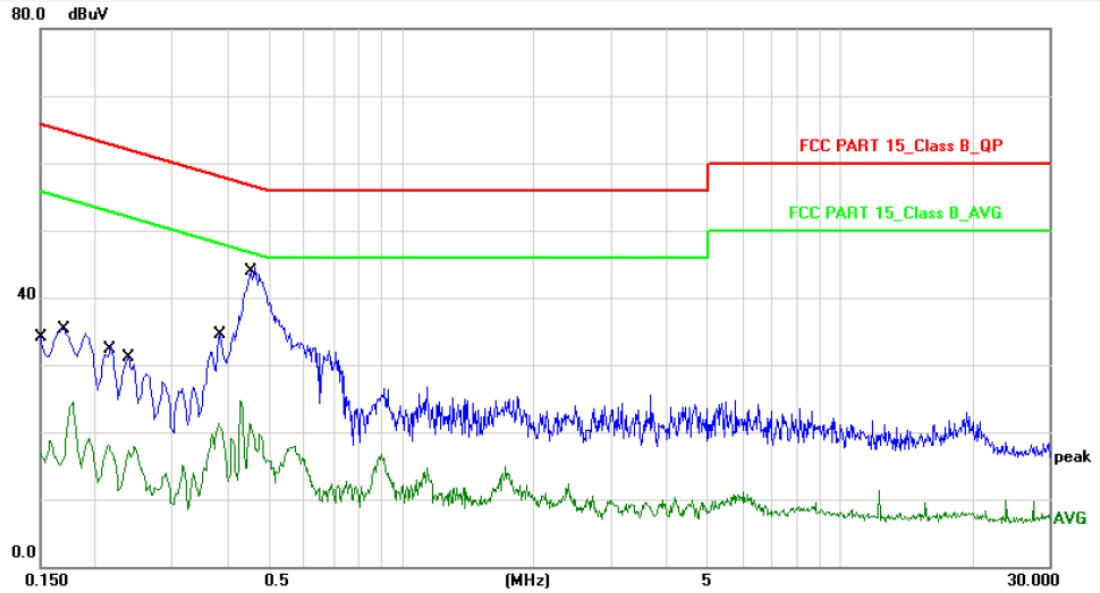

Report No.:	BDSW-ADP-100		
Test Standard:	FCC PART 15_Class B_QP		
Test item:	Conducted Emission	Phase:	L1
Applicant:	Senjia	Temp.( )/Hum.(%):	26(C) / 60 %
Product:	WIRELESS SUBWOOFER ADAPTER	Power Rating:	AC 120V/60Hz Adapter input
Model No.:	BDSW-ADP-100	Test Engineer:	Gavin
Test Mode:	TX		
Remark:			

No.	Frequency (MHz)	Factor (dBuV)	Reading (dBuV)	Level (dBuV)	Limit (dBuV)	Margin (dB)	Detector	P/F	Remark
1	0.1500	10.80	20.30	31.10	65.99	-34.89	QP	P	
2	0.1500	10.80	3.10	13.90	55.99	-42.09	AVG	P	
3	0.1700	10.80	21.50	32.30	64.96	-32.66	QP	P	
4	0.1700	10.80	10.00	20.80	54.96	-34.16	AVG	P	
5	0.2140	10.80	19.00	29.80	63.04	-33.24	QP	P	
6	0.2140	10.80	4.30	15.10	53.04	-37.94	AVG	P	
7	0.2380	10.80	17.30	28.10	62.16	-34.06	QP	P	
8	0.2380	10.80	4.10	14.90	52.16	-37.26	AVG	P	
9	0.3820	10.80	20.60	31.40	58.23	-26.83	QP	P	
10	0.3820	10.80	7.40	18.20	48.23	-30.03	AVG	P	
11	0.4500	10.80	30.70	41.50	56.87	-15.37	QP	P	
12	0.4500	10.80	7.40	18.20	46.87	-28.67	AVG	P	

Dongguan NTC Co., Ltd.
Tel: +86-769-22022444 Fax: +86-769-22022799
Web: Http://www.ntc-c.com

Site: Conduction

Test Time: 2015-9-14 9:26:44

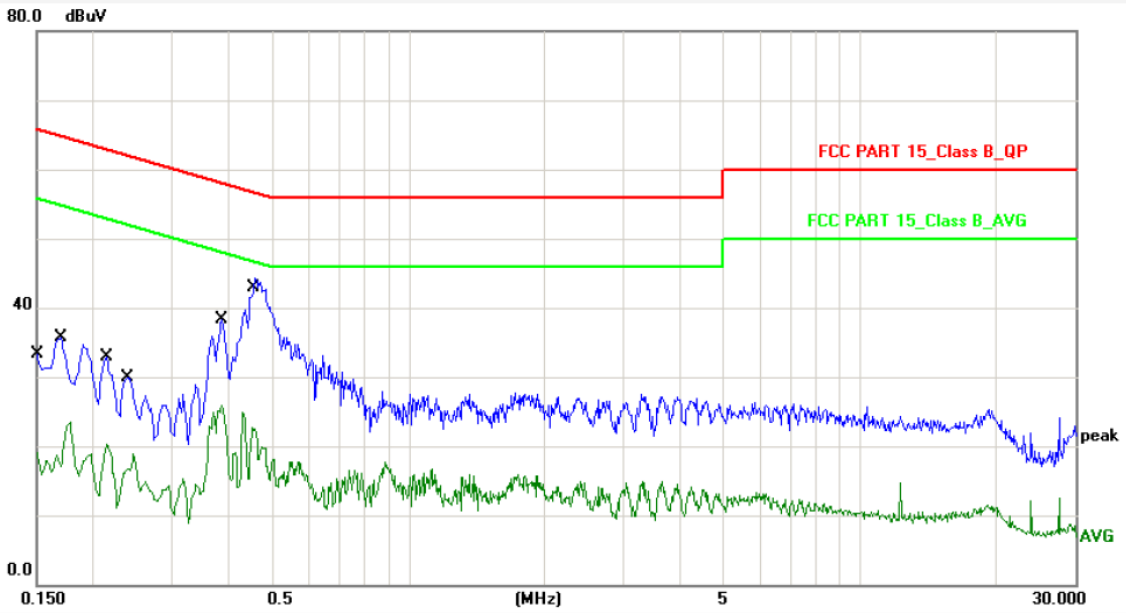

Report No.:	BDSW-ADP-100		
Test Standard:	FCC PART 15_Class B_QP		
Test item:	Conducted Emission	Phase:	N
Applicant:	Senjia	Temp.( )/Hum.(%):	26(C) / 60 %
Product:	WIRELESS SUBWOOFER ADAPTER	Power Rating:	AC 120V/60Hz Adapter input
Model No.:	BDSW-ADP-100	Test Engineer:	Gavin

Test Mode: TX

Remark:

No.	Frequency (MHz)	Factor (dBuV)	Reading (dBuV)	Level (dBuV)	Limit (dBuV)	Margin (dB)	Detector	P/F	Remark
1	0.1500	10.80	19.40	30.20	65.99	-35.79	QP	P	
2	0.1500	10.80	5.30	16.10	55.99	-39.89	AVG	P	
3	0.1700	10.80	21.80	32.60	64.96	-32.36	QP	P	
4	0.1700	10.80	7.60	18.40	54.96	-36.56	AVG	P	
5	0.2140	10.80	19.00	29.80	63.04	-33.24	QP	P	
6	0.2140	10.80	6.40	17.20	53.04	-35.84	AVG	P	
7	0.2380	10.80	16.00	26.80	62.16	-35.36	QP	P	
8	0.2380	10.80	5.00	15.80	52.16	-36.36	AVG	P	
9	0.3860	10.80	24.40	35.20	58.15	-22.95	QP	P	
10	0.3860	10.80	12.10	22.90	48.15	-25.25	AVG	P	
11	0.4500	10.80	30.50	41.30	56.87	-15.57	QP	P	
12	0.4500	10.80	8.80	19.60	46.87	-27.27	AVG	P	

4. Radiated Emission Test

4.1 Test SET-UP (Block Diagram of Configuration)

4.1.1 Radiated Emission Test Set-Up, Frequency Below 30MHz

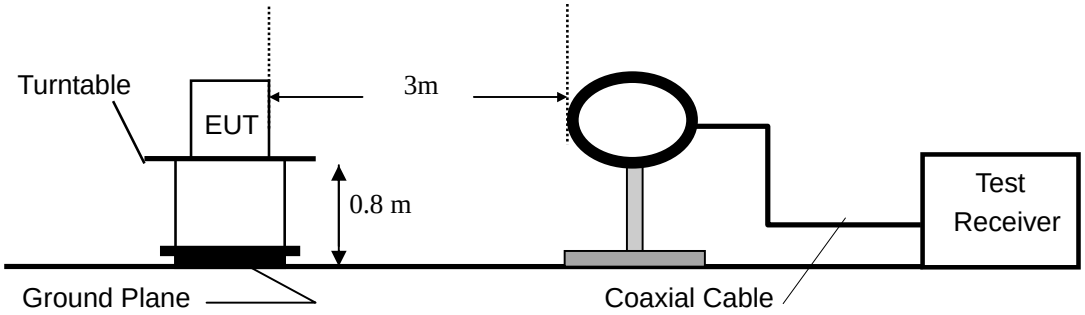

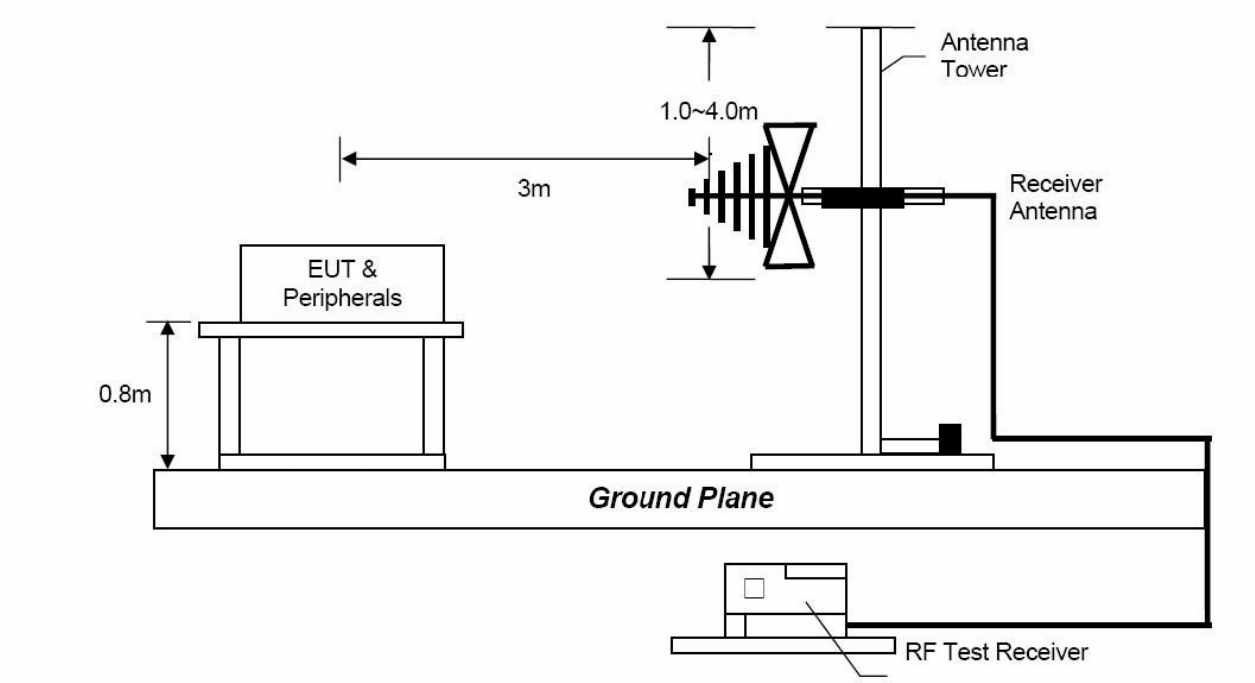

4.1.2 Radiated Emission Test Set-Up, Frequency above 1GHz

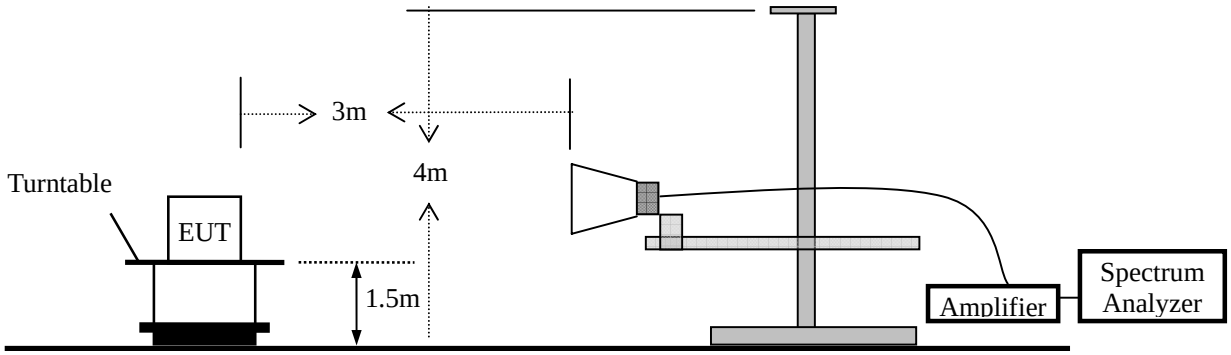

4.2 Measurement Procedure

a. Blow 1GHz, the EUT was placed on the top of a rotating table 0.8 meters above the ground at a 3 meter semi- anechoic chamber room. Above 1GHz, the EUT was placed on the top of a rotating table 1.5 meters above the ground at a 3 meter semi- anechoic chamber room. The table was rotated 360 degrees to determine the position of the highest radiation.
b. The EUT was set 3 meters away from the interference-receiving antenna, which was mounted on the top of a variable-height antenna tower.
c. The height of antenna is varied from one meter to four meters above the ground to determine the maximum value of the field strength. Both horizontal and vertical polarizations of the antenna are set to make the measurement.
d. For each suspected emission, the EUT was arranged to its worst case and then the antenna was tuned to heights from 1 meter to 4 meters and the rotatable table was turned from 0 degrees to 360 degrees to find the maximum reading. The test-receiver system was set to peak detect function and specified bandwidth with maximum hold mode.
e. A Quasi-peak measurement was then made for that frequency point for below 1GHz test. PK and AV for above 1GHz emission test.

For 30MHz to 1GHz:
Sept the spectrum analyzer as: RBW=120kHz, VBW=300kHz, Detector=Quasi-Peak

For Above 1GHz:
Set the spectrum analyzer as: RBW=1MHz, VBW=3MHz, Detector=Peak.
Set the spectrum analyzer as: RBW=1MHz, VBW=10Hz, Detector=Peak.

During the radiated emission test, the spectrum analyzer was set with the following configurations:

Frequency Band (MHz)	Level	Resolution Bandwidth	Video Bandwidth
30 to 1000	QP	120 kHz	300 kHz
Above 1000	Peak	1 MHz	3 MHz
	Average	1 MHz	10 Hz

4.3 Limit

Frequency range MHz	Distance Meters	Field Strengths Limit (15.209) μV/m
0.009 ~ 0.490	300	2400/F(kHz)
0.490 ~ 1.705	30	24000/F(kHz)
1.705 ~ 30	30	30
30 ~ 88	3	100
88 ~ 216	3	150
216 ~ 960	3	200
Above 960	3	500

Frequency range MHz	Distance Meters	Field Strengths Limit (15.249)	
		mV/m (Field strength of fundamental)	μV/m (Field strength of Harmonics)
902 ~ 928	3	50	500
2400 ~ 2483.5	3	50	500
5725 ~ 5875	3	50	500
24000 ~ 2425000	3	250	2500

Remark：(1) Emission level (dB)μV = 20 log Emission level μV/m
(2) The smaller limit shall apply at the cross point between two frequency bands.
(3) As shown in 15.35(b), for frequencies above 1000MHz, the field strength limits are based on average detector, however, the peak field strength of any emission shall not exceed the maximum permitted average limits, specified above by more than 20dB under any condition of modulation.
(4) The frequency range scanned is from the lowest radio frequency signal generated in the device which is greater than 9 kHz to the tenth harmonic of the highest fundamental frequency or 40 GHz, whichever is lower.

4.4 Measurement Results

Please refer to following the test plots and data tables.

Dongguan NTC Co., Ltd.
Tel:+86-769-22022444 Fax:+86-769-22022799
Web: Http://www.ntc-c.com

Site: Radiation

Test Time: 2015-9-14 10:11:57

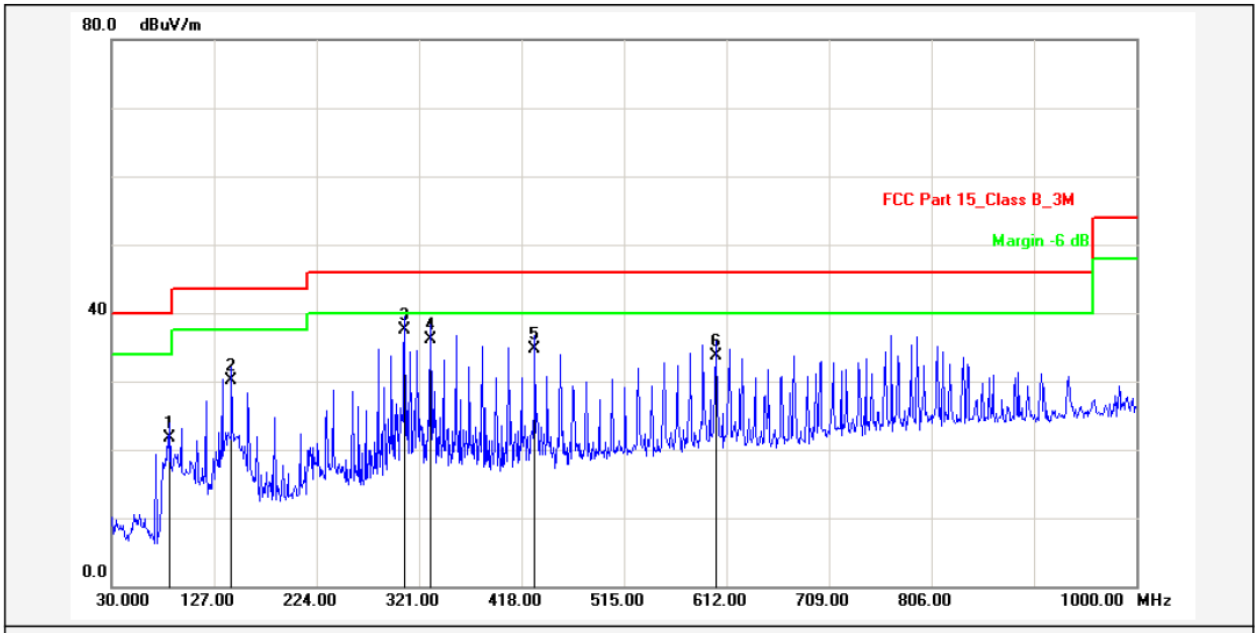

Report No.:	BDSW-ADP-100		
Test Standard:	FCC Part 15_Class B_3M	Test Distance:	
Test item:	Radiation Emission	Ant. Polarization:	Horizontal
Applicant:	Twin-Star	Temp.(C)/Hum.(%):	21(C) / 55 %
Product:	WIRELESS SUBWOOFER ADAPTER	Power Rating:	AC 120V/60Hz
Model No.:	BDSW-ADP-100	Test Engineer:	Gavin

Test Mode: TX

Remark:

No.	Frequency (MHz)	Factor (dB/m)	Reading (dBuV)	Level (dBuV/m)	Limit (dBuV/m)	Margin (dB)	Detector	Height (cm)	Azimuth (deg.)	P/F	Remark
1	85.2900	-15.11	36.91	21.80	40.00	-18.20	QP			P	
2	143.4900	-15.59	45.69	30.10	43.50	-13.40	QP			P	
3	307.4200	-10.26	47.76	37.50	46.00	-8.50	QP			P	
4	331.6700	-9.56	45.76	36.20	46.00	-9.80	QP			P	
5	430.6100	-8.42	43.22	34.80	46.00	-11.20	QP			P	
6	602.3000	-5.00	38.80	33.80	46.00	-12.20	QP			P	

Note: Below 30MHz, the emissions are lower than 20dB below the allowable limit.

Dongguan NTC Co., Ltd.
Tel:+86-769-22022444 Fax:+86-769-22022799
Web: Http://www.ntc-c.com

Site: Radiation

Test Time: 2015-9-14 10:18:19

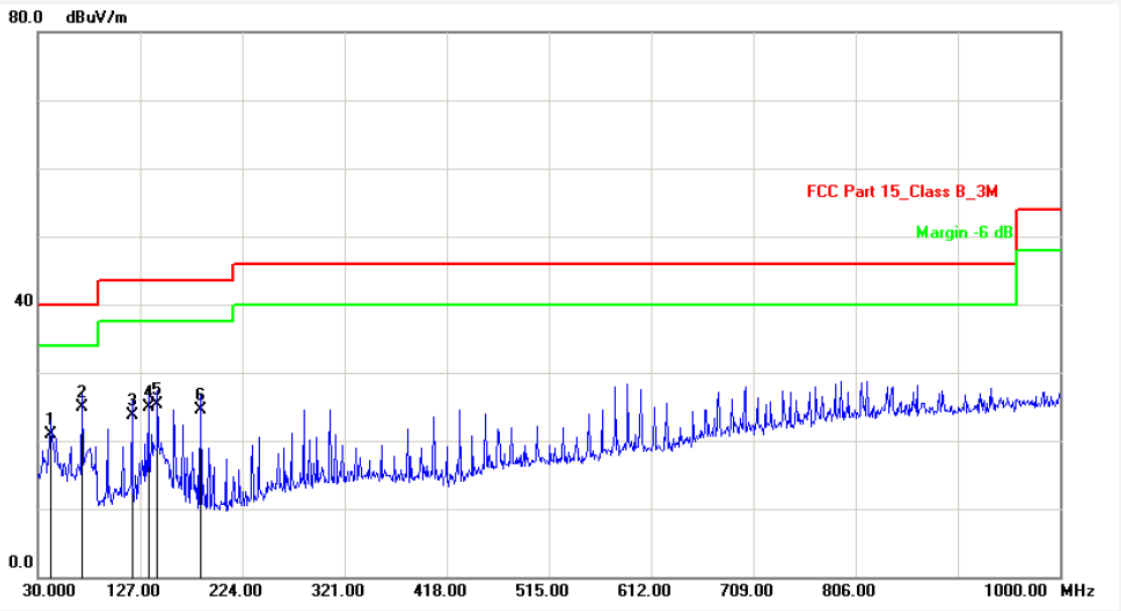

Report No.:	**BDSW-ADP-100**		
Test Standard:	**FCC Part 15_Class B_3M**	**Test Distance:**	
Test item:	**Radiation Emission**	**Ant. Polarization:**	**Vertical**
Applicant:	**Twin-Star**	**Temp.(C)/Hum.(%):**	**21(C) / 55 %**
Product:	**WIRELESS SUBWOOFER ADAPTER**	**Power Rating:**	**AC 120V/60Hz**
Model No.:	**BDSW-ADP-100**	**Test Engineer:**	**Gavin**

Test Mode: **TX**

Remark:

No.	Frequency (MHz)	Factor (dB/m)	Reading (dBuV)	Level (dBuV/m)	Limit (dBuV/m)	Margin (dB)	Detector	Height (cm)	Azimuth (deg.)	P/F	Remark
1	41.6400	-14.69	35.59	20.90	40.00	-19.10	QP			P	
2	71.7100	-17.95	42.85	24.90	40.00	-15.10	QP			P	
3	119.2400	-16.89	40.69	23.80	43.50	-19.70	QP			P	
4	134.7600	-18.36	43.26	24.90	43.50	-18.60	QP			P	
5	143.4900	-18.59	43.89	25.30	43.50	-18.20	QP			P	
6	184.2300	-16.88	41.48	24.60	43.50	-18.90	QP			P	

Note: Below 30MHz, the emissions are lower than 20dB below the allowable limit.

Frequency Range:	1-25GHz	Test Date :	Sep. 19, 2015
Test Result:	PASS	Temperature :	21 ℃
Measured Distance:	3m	Humidity :	55 %
Test By:	Sance		

Freq. (MHz)	Ant.Pol. H/V	Emission Level(dBuV)		Limit 3m(dBuV/m)		Margin(dB)	
		PK	AV	PK	AV	PK	AV
Operation Mode: TX Mode							
2403	V	74.69	73.84	114.00	94.00	-39.31	-20.16
4806	V	53.72	40.12	74.00	54.00	-20.28	-13.88
7209	V	60.17	48.17	74.00	54.00	-13.83	-5.83

2403	H	86.45	82.32	114.00	94.00	-27.55	-11.68
4806	H	54.49	42.35	74.00	54.00	-19.51	-11.65
7209	H	60.58	50.10	74.00	54.00	-13.42	-3.90

Note:
(1) All Readings are Peak Value and AV.
(2) Emission Level= Reading Level + Factor
(3) Factor= Antenna Gain + Cable Loss – Amplifier Gain
(4) Data of measurement within this frequency range shown " ---" in the table above means the reading of emissions are attenuated more than 10dB below the permissible limits.
(5) Measurement uncertainty : ±3.7dB.
(6) Horn antenna used for the emission over 1000MHz.

5. 20dB Bandwidth

5.1 Measurement Procedure

The 20dB bandwidth of the emission was contained within the frequency band designated which the EUT operated. The effects, if any, from frequency sweeping, frequency hopping, other modulation techniques and frequency stability over excepted variations in temperature and supply voltage were considered, FCC Rule 15.215(c):

The antenna port of the EUT was connected to the input of a spectrum analyzer. Analyzer RBW was chosen so that the display was a result of the hopping channel modulation. For each RF output channel investigated, the spectrum analyzer center frequency was set to the channel carrier. Use the spectrum 20dB down delta function to measure the bandwidth.

5.2 Test SET-UP (Block Diagram of Configuration)

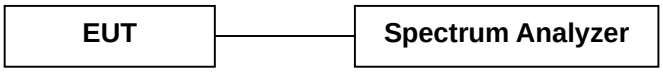

5.3 Measurement Results

Refer to attached data chart.

RBW:	100KHz	VBW:	300KHz
Spectrum Detector:	PK	Temperature :	23 ℃
Test By:	Sance	Humidity :	54 %
Test Result:	PASS	Test Date :	September 21, 2015

Channel frequency (MHz)	20dB Down BW(kHz)
2403	294

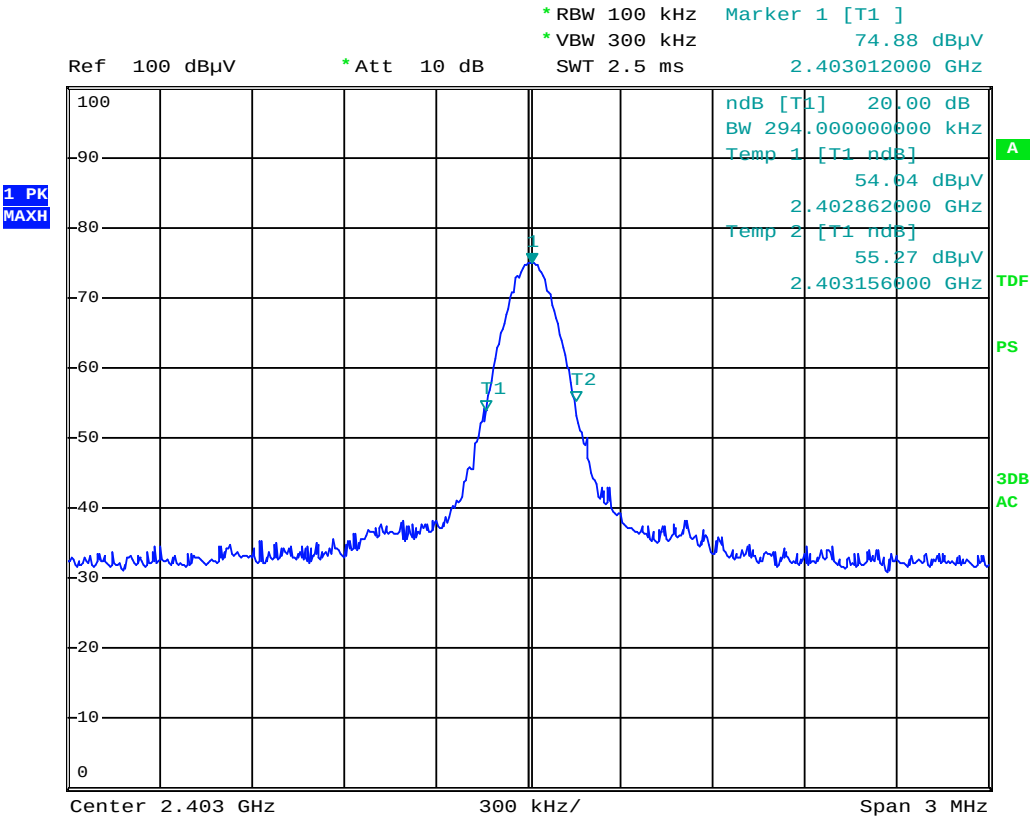

Date: 21.SEP.2015 20:18:26

6. Band Edge

6.1 Measurement Procedure

Same as Radiated Emission Test.

6.2 Limit

Emissions radiated outside of the specified frequency bands, except for harmonics, shall be attenuated by at least 50 dB below the level of the fundamental or to the general radiated emission limits in §15.209, whichever is the lesser attenuation.

6.3 Measurement Results

Operation Mode:	TX Mode	Test Date :	September 21, 2015
Temperature :	21 ℃	Humidity :	55 %
Test Result:	PASS	Test By:	Sance
Measured Distance:	3m		

Freq. (MHz)	Ant. Pol.	Emission Level (dBuV)		Limit 3m (dBuV/m)		Margin (dB)	
		Peak	AV	Peak	AV	Peak	AV
2399.990	H	48.97	34.74	74.00	54.00	-25.03	-19.26
2399.990	V	51.50	40.02	74.00	54.00	-22.50	-13.98

Note: (1) Emission Level= Reading Level + Factor
(2) Factor= Antenna Gain + Cable Loss – Amplifier Gain
(3) Horn antenna used for the emission over 1000MHz.

7. Antenna requirement

7.1 Measurement Procedure

According to of FCC part 15C section 15.203:

An intentional radiator shall be designed to ensure that no antenna other than that furnished by the responsible party shall be used with the device. The use of a permanently attached antenna or of an antenna that uses a unique coupling to the intentional radiator, the manufacturer may design the unit so that a broken antenna can be replaced by the user, but the use of a standard antenna jack or electrical connector is prohibited.

Systems operating in the 2400-2483.5MHz band that are used exclusively for fixed, point-to-point operations may employ transmitting antennas with directional gain greater than 6dBi provided the maximum peak output power of the intentional radiator is reduced by 1dB for every 3dB that the directional gain of the antenna exceeds 6dBi.

7.2 Measurement Results

The antenna is integrated on the main PCB and no consideration of replacement, and the best case gain of the antenna is 0dBi. So, the antenna is consider meet the requirement.

8. Test Equipment List

Description	Manufacturer	Model Number	Serial Number	Characteristics	Calibration Date	Calibration Due Date
Test Receiver	Rohde & Schwarz	ESCI7	100837	9KHz~7GHz	Nov. 24, 2014	Nov. 23, 2015
Antenna	Schwarzbeck	VULB9162	9162-010	30MHz~7GHz	Nov. 27, 2014	Nov. 26, 2015
Positioning Controller	UC	UC 3000	N/A	0~360°, 1-4m	N/A	N/A
Color Monitor	SUNSPO	SP-140A	N/A	N/A	N/A	N/A
Single Phase Power Line Filter	SAEMC	PF201A-32	110210	32A	N/A	N/A
3 Phase Power Line Filter	SAEMC	PF401A-200	110318	200A	N/A	N/A
DC Power Filter	SAEMC	PF301A-200	110245	200A	N/A	N/A
Cable	Huber+Suhner	CBL2-NN-1M	22390001	9KHz~7GHz	Nov. 08, 2014	Nov. 07, 2015
Cable	Huber+Suhner	CIL02	N/A	9KHz~7GHz	Nov. 08, 2014	Nov. 07, 2015
Power Amplifier	HP	HP 8447D	1145A00203	100KHz~1.3GHz	Nov. 08, 2014	Nov. 07, 2015
Horn Antenna	Schwarzbeck	BBHA9170	9170-372	15GHz~26.5GHz	Oct.24, 2014	Oct.23, 2015
Horn Antenna	Com-Power	AH-118	071078	1GHz~18GHz	Nov. 06, 2014	Nov. 05, 2015
Loop antenna	Daze	ZA30900A	0708	9KHz~30MHz	Oct.11, 2014	Oct.10, 2015
Spectrum Analyzer	Rohde & Schwarz	FSU26	200409/026	20Hz~26.5GHz	Sep. 01, 2015	Aug.31, 2016
Pre-Amplifier	Agilent	8449B	3008A02964	1GHz~26.5GHz	Nov. 04, 2014	Nov. 03, 2015
L.I.S.N.	Rohde & Schwarz	ENV 216	101317	9KHz~30MHz	Nov. 08, 2014	Nov. 07, 2015

---End---