HARDWARE LIST

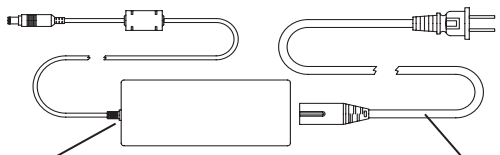

W

Y12-PID01-MN

V

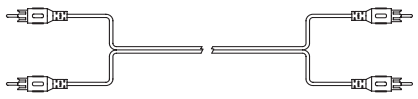

X

Y12-PID01-K

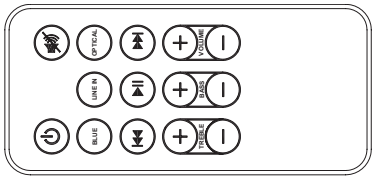

OO

Y15-1213-RC

REPLACEMENT PARTS
PIECES DE REMPLACEMENT
PARTES DE REPUESTO

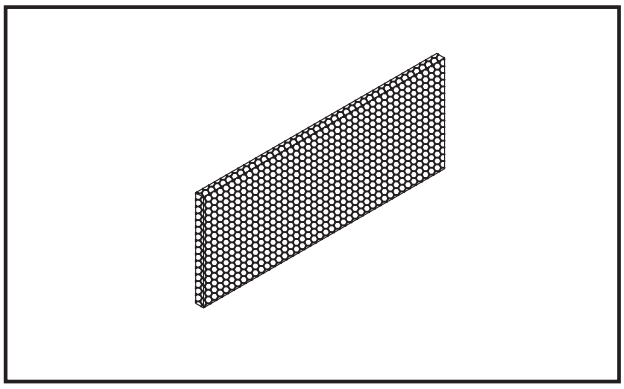

Y15-SG-12130308

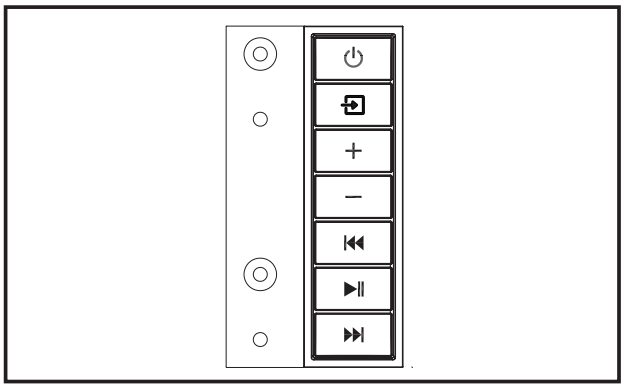

Y15-CP-1213

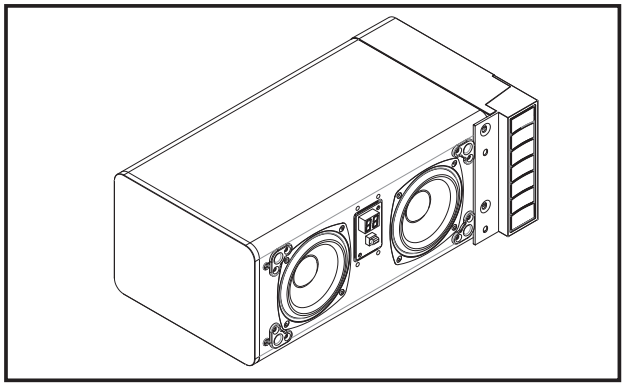

Y15-SB-1206

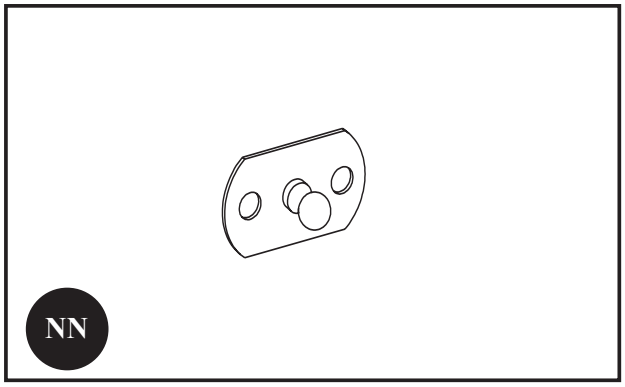

Y14-PID01-PG

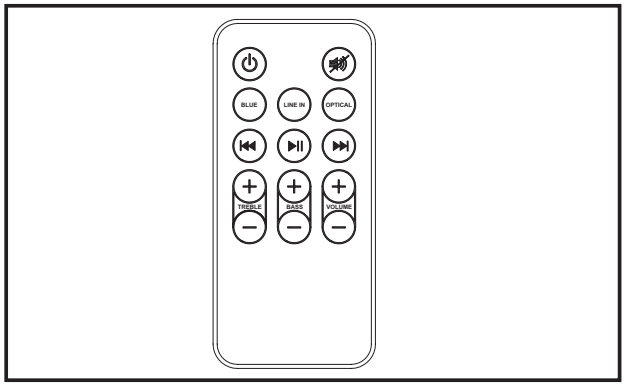

Y15-RC-1213

Sound System: TS-1206

PRODUCT SPECIFICATIONS

Adapter Input	AC100-240V, 50/60Hz
Adapter Output	DC15V 2.0A
Power Consumption	30 Watts
Standby Power Consumption	< 1 W
Peak Music Power Output	150 W

WIRING

1. AUDIO INPUT R/L - RCA plug AUX IN for connecting to an audio source
2. DC IN - Connect the power supply
3. OPTICAL INPUT - Input the console using Optical cable

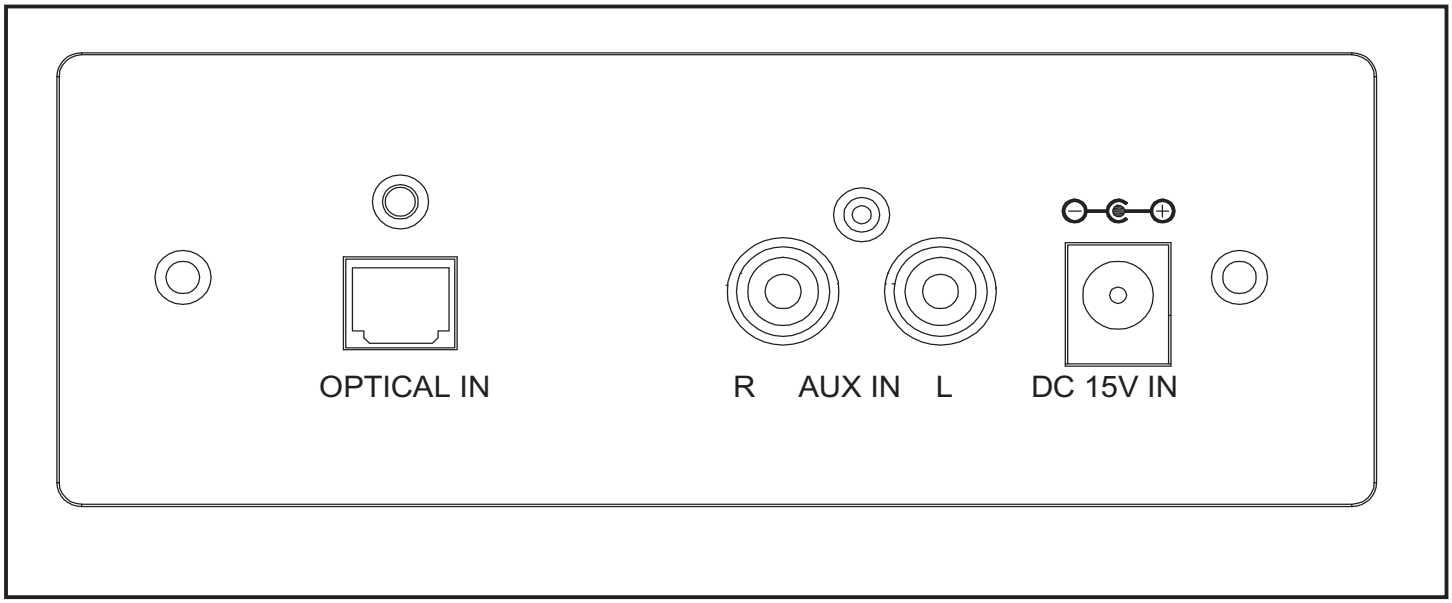

Fig.1 Back Panel

OPERATION INSTRUCTIONS

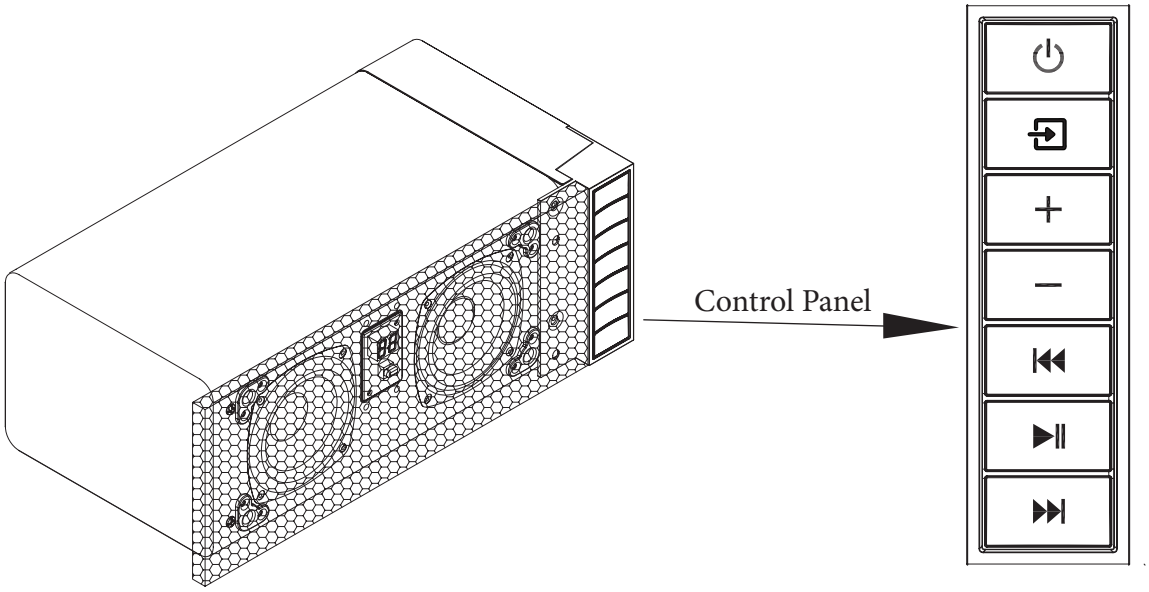

The speaker can be operated by either the remote control or the control panel.

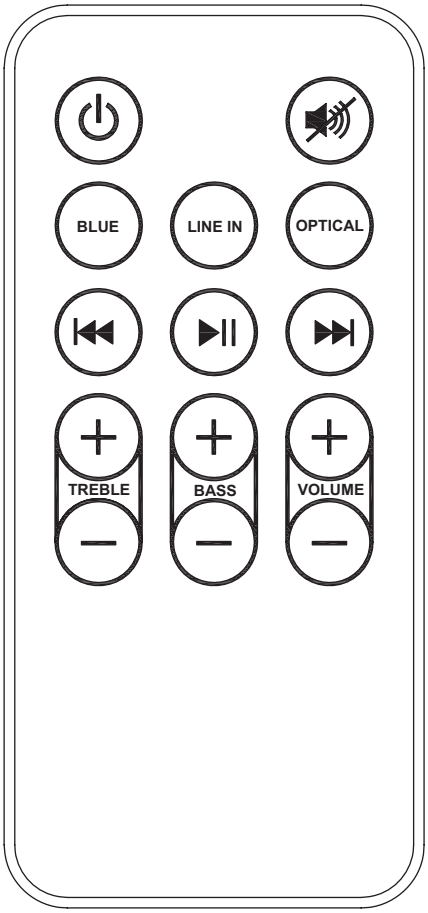

OPERATION INSTRUCTIONS

FUNCTION	ICON	DESCRIPTION
POWER		The POWER button supplies power to all the functions of the unit. Pressing and holding this button for 3 seconds on Bluetooth mode will make Bluetooth pairing.
SPEAKER		To scroll through the different input options: **BT - Bluetooth** Search for other smartphones and devices. The blue flashing light indicates the unit is searching for devices with a WPAN (Bluetooth) function activated. Selecting TS-1206 from your device will link it to the console and allow to stream sound from up to 10 meters away. The light will stay continuously lit once a connection has been made to the device. **OP - Optical Input** Steam sound from your television or other device connected to the console at the back panel by Optical cable. **AU - AUX Input** Steam sound from your television or other device connected to the console at the back panel by RCA cables.
ADJUSTMENT		Adjust the volume if Speaker is ON
PREV/NEXT		In Bluetooth mode, press PREV/NEXT buttons to change previous or next songs.
PLAY/PAUSE		In Bluetooth mode, press PLAY/PAUSE button to play or pause the selected track.
MUTE		Press MUTE button on the remote to mute and un-mute the volume.

OPERATION INSTRUCTIONS

FUNCTION	ICON	DESCRIPTION
BLUE		Press BLUE button on the remote to switch to Bluetooth input.
LINE IN		Press LINE IN button on the remote to switch to Line In input.
OPTICAL		Press OPTICAL button on the remote to switch to Optical input.
TREBLE		Press TREBLE button on remote to adjust the TREBLE up or down.
BASS		Press BASS button on remote to adjust the BASS up or down.
VOLUME		Press VOLUME button on remote to adjust the volume.

TROUBLESHOOTING

PROBLEM	SOLUTION
1. Sound is distorted.	1a. Decrease the volume. 1b. If the iPhone/iPod original sound source is of poor quality, distortion and noise are easily noticed with high-power speakers. Try a different audio source such as a music CD. 1c. If you are using an external sound source like older generation of iPod, try reducing the output volume on the device itself. 1d. Try changing the bass and treble settings using the remote control.
2. Unit gets warm after extended play at high volume.	2a. Turn the unit off for a period of time or lower the volume.

CARE AND MAINTENANCE

Warning:

1. If the supply cord is damaged it must be replaced by the manufacturer, it's service agent or similarly qualified persons in order to avoid a hazard.
2. Only a qualified service person should repair this product.
3. Do not use outdoors.
4. Do not insert or allow foreign objects to enter the system as this may cause an electric shock, fire, or damage to the appliance.
5. Use this appliance only as described in the manual. Any other use not recommended by the manufacturer may cause fire, electric shock or injury to persons.

Replacing the Remote Control Battery

When the remote control stops operating or its range seems reduced, it is time to replace the battery with a new one.

1. The battery compartment is located on the back end of the remote.
2. Press and slide the battery door open and remove the old battery.
3. Insert 1pc CR2025 battery, checking that the + and - sides of the battery match inside the battery compartment.
4. Replace the battery compartment door.

CAUTION:

- Always purchase the correct size and grade of battery most suitable for the intended use.
- Replace all batteries of a set at the same time.
- Clean the battery contacts and also those of the device prior to battery installation.
- Ensure the batteries are installed correctly with regard to polarity (+ and -).
- Remove batteries from equipment which is not to be used for an extended period of time.
- Remove used batteries promptly.

Note: Caution do not ingest batteries. If batteries are swallowed immediately call poison control.

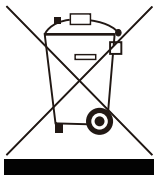

Disposal of Used Batteries

Battery may contain hazardous substances which could be endangering to enviroment and human health.

This symbol marked on the battery and/or packaging indicates that used battery shall not be treated as municipal waste. Instead it shall be left at the appropriate collection point for recycling.

By ensuring the used batteries are disposed of correctly, you will help preventing potential negative consequences for the environment and human health. The recycling of materials will help to converse natural resources.

For more information about collection and recycling of used batteries, please contact your local municipality, your waste disposal service or the point of sale where you purchased this point.

NOTE: This equipment has been tested and found to comply with the limits for Class B digital device, pursuant to part 15 of the FCC Rules. These limits are designed to provide reasonable protection against harmful interference in a residential installation. This equipment generates,uses, and can radiate radio frequency energy and, if not installed and used in accordance with the instructions, may cause harmful interference to radio or television reception. Interference can be determined by turning the equipment off and on. The user is encouraged to try to correct the interference by trying one or more of the following measures:

- Reorient or relocate the receiving antenna.
- Increase the separation between the equipment and the receiver.
- Connect the equipment into an outlet on a circuit different from that to which the receiver is connected.
- Consult the dealer or an experienced radio/TV technician for help.

This device complies with Part 15 of the FCC Rules. Operation is subject to the following two conditions:

(1) This device may not cause harmful interference and

(2) This device must accept any interference received, including interference that may cause undesired operation. Modifcations not approved by the party responsible for compliance could void user's authority to operate the equipment.

This Class B digital apparatus complies with Canadian ICES-003.

1-YEAR LIMITED WARRANTY

The manufacturer warrants that your new Media Console with Sound Bar is free from manufacturing and material defects for a period of one year from date of purchase, subject to the following conditions and limitations.

1. Install and operate this Media Console with Sound Bar in accordance with the installation and operating instructions furnished with the product at all times. Any unauthorized repair, alteration, willful abuse, accident, or misuse of the product shall nullify this warranty.
2. This warranty is non-transferable, and is made to the original owner, provided that the purchase was made through an authorized supplier of the product.
3. The warranty is limited to the repair or replacement of part(s) found to be defective in material or workmanship, provided that such part(s) have been subjected to normal conditions of use and service, after said defect is confirmed by the manufacturer's inspection.
4. The manufacturer may, at its discretion, fully discharge all obligations with respect to this warranty by refunding the wholesale price of the defective part(s).
5. Any installation, labor, construction, transportation, or other related costs/expenses arising from defective part(s), repair, replacement, or otherwise of same, will not be covered by this warranty, or shall the manufacturer assume responsibility for same.
6. The owner/user assumes all other risks, if any, including the risk of any direct, indirect or consequential loss or damage arising out of the use, or inability to use the product, except as provided by law.
7. All other warranties – expressed or implied –with respect to the product, its components and accessories, or any obligations/liabilities on the part of the manufacturer are hereby expressly excluded.
8. The manufacturer neither assumes, nor authorizes any third party to assume on its behalf, any other liabilities with respect to the sale of the product.
9. The warranties as outlined within this document do not apply to non accessories used in conjunction with the installation of this product.
10. This warranty gives you specific legal rights, and you may also have other rights which vary from state to state.

This warranty is void if:

a. The Media Console with Sound Bar is subjected to prolonged periods of dampness or condensation.
b. Any unauthorized alteration, willful abuse, accident, or misuse of the product.
c. You do not have the original receipt of purchase.

Warning: Changes or modifications to this unit not expressly approved by the part responsible for compliance could void the user's authority to operate the equipment.

FCC Radiation Exposure Statement

This equipment complied with FCC radiation exposure limits set forth for an uncontrolled environment. This equipment should be installed and operated with minimum distance 20cm between the radiator & your body.