BUDDERFLY
ON DEMAND ENERGY MANAGEMENT

# SWITCH DIMMER

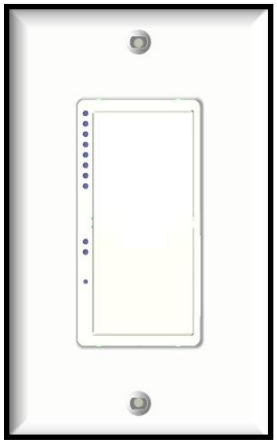

**Part No S1111111**

## Description:

Installing a Budderfly adapter transforms your building's existing wiring into the "Budderfly Open Network" and allows the adapter to monitor energy consumption and communicate the data to a facility controller. The Budderfly Switch Dimmer is a dual band device. It communicates using both Powerline and wireless RF. Thus there is no need for rewiring.

Using the Budderfly software, it is possible to visualize consumption data and manage each individual adapter.

As a component of the Budderfly system, the Budderfly Switch Dimmer is designed to work with all other Budderfly adapters. It is a plug-and-play replacement for your existing switch dimmer, and it provides multiple dimming techniques. Once installed, The Budderfly Switch Dimmer also acts as a repeater to extend the range of the network and increase its efficiency.

### ⚠CAUTION

- The Budderfly Switch Dimmer is intended for installation in accordance with the National Electric Code and local regulations in the United States.
- If you are not knowledgeable or comfortable with electrical circuitry, you should consult a certified electrician for the installation

### ⚠CAUTION

- The Switch Dimmer is designed for indoor use only
- Use only copper or copper-clad wires with this device

## Installation:

1. From the electrical panel board, turn off the circuit power feeding the switch dimmer.
2. Remove the wall plate. Unscrew the old switch dimmer and pull it out from the junction box.
3. Unscrew the wires from the terminal blocks on the Budderfly switch dimmer.
4. Prepare the wires by striping the insulation according to the strip gage placed on the back of the switch dimmer package. The stripped copper should be around 6.5 mm long.
5. Refer to the connection diagrams below in order to connect the switch dimmer. The connection will change depending on the load.
6. After connecting all the wires, ensure that all the screws on the terminal block are firmly tightened and that there is no exposed copper.
7. Place the switch dimmer in the junction box. Screw the switch dimmer into place.
8. Reinstall the wall plate.
9. From the electrical panel board, turn on the circuit power feeding the switch dimmer.
10. Add the device address to the Budderfly software.

Connection Diagram A: Connection for 0-10v Dimming

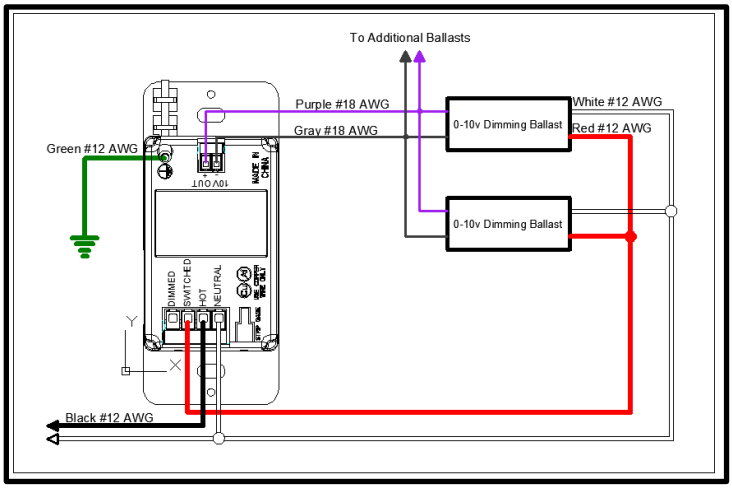


Connection Diagram B : Connection for Phase Control Dimming

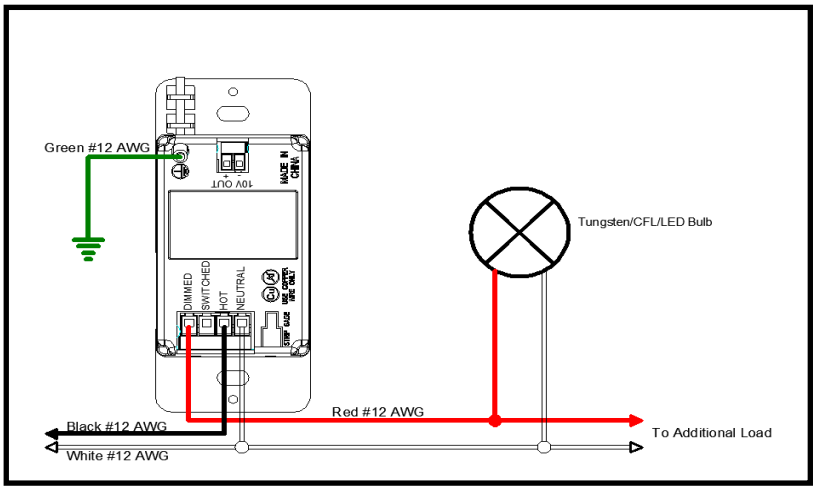


### ⚠ CAUTION

If you are not sure about any of the steps above, please consult a certified electrician for the installation

### ⚠ CAUTION

To Reduce the Risk of Overheating And Possible Damage To Other Equipment, Do Not Install To Control A Receptacle, A Motor-Operated Appliance, A Fluorescent Lighting Fixture, Or A Transformer-Supplied Appliance.

- **Do Not** use the Budderfly Switch Dimmer where excessive moisture is present or near Water related Applications
- **Do Not** use the Budderfly Switch Dimmer with loads that exceed the maximum rating specified.

# Features:

- Eight dimming levels indicated with LED lights
- Supports multiple dimming techniques.
- Ability to resume from previous dimming level
- Ability to create a group of devices
- Ability to monitor power consumption

***Remote Control:***

- All the functions of the switch dimmer can be controlled remotely using the Budderfly Software
- The Budderfly Software will inform you if the action was successful

***Device Grouping:***

- Using the Budderfly software, it is possible to create a Group of Switch Dimmers.
- Devices that are member of the same group can be controlled with a single click from the Budderlfy Applictaion

***Power consumption:***

- The Budderfly Switch Dimmer will measure the current, the voltage and the power of the connected load and it will store the consumed energy.
- The data can be accessed any time thru the Budderfly software. The user can generate reports, monitor the consumption or check expenses.

**Reset:**

If the device stops responding, it can be restarted by pushing the Reset Button.
A non-metallic pin should be used to push the reset button.
None of the stored parameters will be affected.

**⚠ CAUTION**

- Never use a metallic pin to press the reset button.

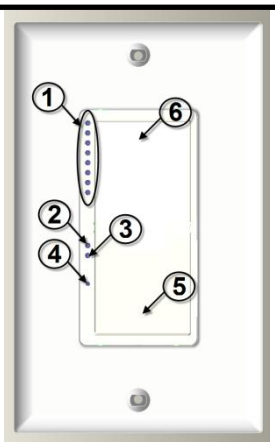


1- Dimming Level LEDs: These LEDs show the current dimming level from 1 to 8. Color : **Green**
2- Power LED: This led will turn on when the device is on. Color : **Red**
3- Group LED: This led will turn on when the device joins a group. Color: **Green**.
4- Reset Button: If the device stops responding, it can be restarted using this button. A non metallic pin must be used to push the reset button. None of the stored parameters will be affected
5- Bottom Rocker: A single tap on this button will turn the device off saving the current diming level. A Tap and Hold on this button will cycle the light level down.
6- Top Rocker: A single tap on this button will turn the device on and resume the previous dimming level. A Tap and Hold on this button will cycle the light level up.

## "Power Cut-Off" mode:

- The Budderfly dimmers have the ability to completely disconnect the power from the load.
- Pressing the top of the rocker for 15 seconds will activate the "Power Cut-off" feature; the load will be turned off.
- The Power LED will start blinking to indicate that the load is disconnected and the dimmer is in the Power Cut-off mode.
- When the "Power Cut-off" mode is activated, the dimmer cannot be turned on through software and cannot be turned on physically.
- Pressing the bottom of the rocker for 15 seconds will de-activate the "Power Cutoff" mode, and the device will go back to the normal state.

**⚠ CAUTION**

When replacing the Bulbs, make sure to enable the "Power Cut-off" mode. If the power LED does not start blinking, please consult a qualified electrician.

# Communication:

The Budderfly Switch Dimmer is a dual band device. It communicates with the "Facility Controller" using both Powerline and wireless RF. The following commands are supported :

- Direct Turn On/Off command: The load will be switched on or off
- Direct Turn On level "X": The load will be switched on to the dimming level specified "X".
- Dim One Level Up : The load will be dimmed one level
- Dim One Level Down: The load will be brightened one level
- Join/Disjoin group "X": The device will Join/Disjoin the group "X". Each dimmer can be member of several groups at the same time.
- Group Turn On/Off: All Budderfly Switch Dimmers that are members of the same group can be controlled remotely with one click.
- Direct RTC synchronization: The Budderfly Switch Dimmer can receive a command to synchronize its "Real Time Clock"
- Get Actual Measurement: When the Budderfly Switch Dimmer receives a "Get Measurement" command, it will send back to the facility controller a string of data that contains:
  - The Current in Amps "A".
  - The Power in Watt "W".
  - A Timestamp.
- Get Stored Measurement: The Budderfly Dimmer Switch will send back to the Facility Controller the stored electrical measurements.
- Direct Reset Commands: The Budderfly Dimmer Switch can receive 3 types of reset commands:
  - Hard Reset: This command will restart the device without affecting any stored parameter.
  - Data Reset: This command will erase all the measurement and RTC data stored in the non-volatile memory.
  - Group Reset: This command will remove the device from all joined groups.
- Group Reset Commands: The above reset commands can be directed to a group of devices instead of just one device.

# Electrical Specs:

The Budderfly Switch Dimmer can handle multiple load types. Below is a summary of these loads:

- Voltage: 120/277 VAC - 60Hz
- Maximum Switching Loads:
  Tungsten
  @120V 950W
  @277V 2200W
  Electronic Ballast
  @120V 950W
  @277V 2200W
  Standard Ballast
  @120V 950W
  @277V 2200W
- Maximum Phase Control Loads:
  Tungsten
  @120V 950W
  @277V 2200W

- Maximum 0-10v Dimming : 30mA
- Operating Temperature : 10°C to +40°C
- Certification : ETL & FCC in progress
- For indoor use only

# Derating Chart:

When combining multiple Dimmers in a gang box, the device must be derated. Check the below chart for details.

| Load Type | Voltage | No Sides Removed | 1 Side Removed | 2 Sides Removed |
|---|---|---|---|---|
| Incandescent | 120V | 950 W | 600 W | 600 W |
| | 277V | 2200 W | 1350 W | 1350 W |

# Warranty:

Budderfly LLC warrants to the original consumer purchaser and not for the benefit of anyone else that this product at the time of its sale by Budderfly is free of defects in material and workmanship under normal and proper use for a period of three (3) years from date of delivery to you. Budderfly's only obligation is to correct such defects by repair or replacement, at its option, if within such three year period the product is returned prepaid via Budderfly's Returned Materials Authorization (RMA) process to **Budderfly LLC, Att: Quality Assurance Department, 4 Corporate Drive, Suite 387, Shelton, CT 06484.** In no case is product to be returned without first obtaining an RMA.

This warranty excludes and there is disclaimed liability for labor for removal of this product or reinstallation. This warranty is void if this product is installed improperly or in an improper environment, overloaded, misused, opened, abused, or altered in any manner, or is not used under normal operating conditions or not in accordance with any labels or instructions. **There are no other or implied warranties of any kind, including merchantability and fitness for a particular purpose**, but if any implied warranty is required by the applicable jurisdiction, the duration of any such implied warranty is required by the applicable jurisdiction, the duration of any such implied warranty, including merchantability and fitness for a particular purpose, is limited to three years. **Budderfly is not liable for incidental, indirect, special, or consequential damages, including without limitation, damage to, or loss of use of, any equipment, lost sales or profits or delay or failure to perform this warranty obligation**. **Budderfly's liability on any claim for damages arising out of in connection with the manufacture, sales, installation delivery, or use of the product shall never exceed the purchase price of the product.** The remedies provided herein are the exclusive remedies under this warranty, whether based on contract, tort or otherwise.

FCC NOTE：

This device complies with Part 15 of the FCC Rules.

Operation is subject to the following two conditions: (1) this device may not cause harmful interference, and (2) this device must accept any interference received, including interference that may cause undesired operation.

THE MANUFACTURER IS NOT RESPONSIBLE FOR ANY RADIO OR TV INTERFERENCE CAUSED BY UNAUTHORIZED MODIFICATIONS OR CHANGE TO THIS EQUIPMENT. SUCH MODIFICATIONS OR CHANGE COULD VOID THE USER'S AUTHORITY TO OPERATE THE EQUIPMENT.