Operator's Manual

MODEL WSP-R350

(3inch Mobile Printer)

Rev. 1.0

WOOSIM SYSTEMS Inc.

#501, Daerung Technotown 3th,

448, Gasan-Dong, GeumChun-Ku,

Seoul, Korea

Tel : +82-2-2107-3700

Fax : +82-2-2107-3707

URL: http://www.woosim.com

Copyright

WSP-R350 3inch mobile printer operator's manual.

Copyright ⓒ2014 by Woosim Systems Inc.
All rights reserved.
The information contained in this manual is the property of Woosim Systems Inc. And may not be reproduced in whole or in part without the prior written permission of Woosim Systems Inc.

Trademark

Woosim system a registered trademark of Woosim Systems Inc.
All other trademark are the properties of their respective companies.

Caution

Some semiconductor devices are easily damaged by static electricity. You should turn the printer "OFF", before you connect or removed the cable on the rear side, in order to guard the printer against the static electricity.
If the printer is damaged by the static electricity, you should turn the printer "OFF".

Notice

The contents of this manual are subject to change without notice.

■ Introduction

The **WSP-R350** is suitable designed for use with a growing variety of mobile devices. Bluetooth/Serial interfaces make the WSP-R350 the perfect comrade for applications such as point of transaction warehousing, distribution, point of sales, hospitality, gaming and healthcare.

The general features of **WSP-R350** printer are as follows:

- ▶ Pocket size (108.5 X 134.8 X 56.5mm)
- ▶ Light weight (399g) for true mobility.
- ▶ Very silent printing thru direct thermal printing method.
- ▶ High speed(80mm/sec, MAX)
- ▶ High resolution(203dpi : 8dots/mm)
- ▶ UART(RS-232C or TTL), Bluetooth Ver 2.1 + EDR
- ▶ Intuitive LED's indicate Power(on/off),Error, Bluetooth status, Battery status
- ▶ Support Magnetic Stripe Reader [option].
- ▶ Support text and graphic printing.
- ▶ Easier paper loading by CLAMSHELL design.
- ▶ One touch paper cover
- ▶ Printer door open & Paper-out sensor
- ▶ Easier maintenance with self-diagnostics.
- ▶ In field programming – Update Firmware, Download Fonts and Logos
- ▶ Microsoft Windows XP/VISTA/7-32bit/7-64bit/CE/Linux/Android compatible.
- ▶ Flow control : Software (XON/XOFF)

  ※ Hardware flow control not supported in printer.
- ▶ Agency Approvals

Operating Precautions

Please follow the precautions below to enjoy and maintain the full performance of the printer.

Using the Printer

- Be careful not to drop or bump the printer on a hard surface.
- Do not install the printer in direct sunlight or such areas.
  Suitable environment for the use of the printer is as follows:
  - Operating temperature :-10°C to 50°C
  - Relative humidity : 30% to 80%
- Do not install the printer near devices that generate strong electromagnetic fields such as a copy machine.
- Do not open the platen cover during printing .
- Do not remove or reinstall the communication cable during printing or transmission.
- Do not touch the connectors of the communication during printing.
- Switch the POWER OFF when not in use.
- Do not use other solvent.
- The AC adapter, the battery charger and the battery pack may become warm when in use. This is normal and is not a malfunction.
- When the battery pack is used at low temperature, the length of time the printer can be used may be shortened.

Thermal Paper Handling

- Store the thermal paper in a cool, dry and dark place.
- Do not rub the paper with hard object.
- Do not leave the paper with hard object.
- Do not allow plastic film, erasers, or adhesive tape to touch the paper for long periods.
- Do not stack the thermal paper with diazo copies immediately after copying or wet-type copies.
- Do not use chemical glue.
- Always use the clean thermal paper.

Federal Communications Commission
Radio Frequency Interference Statement

FCC ID : QDDWSP-R350

This device complies with Part 15 of the FCC Rules. Operation is subject to the following two conditions:

(1) This device may not cause harmful interference, and (2) this device must accept any interference received, including interference that may cause undesired operation.

CAUTION: Changes or modifications not expressly approved by the party responsible for compliance could void the user's authority to operate the equipment.

Note: This equipment has been tested and found to comply with the limits for a Class B digital device, pursuant to part 15 of the FCC Rules. These limits are designed to provide reasonable protection against harmful interference in a residential installation. This equipment generates, uses and can radiate radio frequency energy and, if not installed and used in accordance with the instructions, may cause harmful interference to radio communications. However, there is no guarantee that interference will not occur in a particular installation. If this equipment does cause harmful interference to radio or television reception, which can be determined by turning the equipment off and on, the user is encouraged to try to correct the interference by one or more of the following measures:

- Reorient or relocate the receiving antenna.
- Increase the separation between the equipment and receiver.
- Connect the equipment into an outlet on a circuit different from that to which the receiver is connected.
- Consult the dealer or an experienced radio/TV technician for help.

Modifications not expressly approved by the manufacturer could void the user's authority to operated the equipment under FCC rules.

CONTENTS

1. Specifications **7**
2. Setting up the printer **9**
2.1. Printer & Accessories 9
2.2. Printer Features 10
2.3. Dimensions 12
2.4. Replacing the paper roll 14
2.5. Power supply 16
2.5.1. Internal power supply 16
2.5.2. Installing the Battery 16
2.5.3. Recharging the battery 17
2.6. Set operation mode 18
3. Interface **23**
3.1. UART 23
3.2. Bluetooth 24
3.3. Card Reading 24
4. Using the printer **25**
4.1. Control panel 25
4.2. The self test 26
4.3. Using the Belt clip 27
5. Consumable Parts **28**
5.1. Recommended paper 28
5.2. Printing position 28
6. Revision History **29**

1. Specifications

Item	Specification
Printing method	Direct thermal line printing
Characters per line	64cpl (MAX)
Character size	Eng. : 9*24dots, 12*24dots Kor. : 16*24dots, [24*24dots]
Optional Characters	Simplified/Traditional Chinese, Arabic, Cyrillic, Russian, Tukish, Greek, Japanese, Persian, Latin9 and Others upon request.
Resolution	203dpi, 8dots/mm
Print width	3-inch (72mm, 576dots)
Printing speed	80mm / sec (MAX)
Dimensions	108.5 X 134.8 X 56.5mm 108.5 X 138.2 X 56.5mm (MSR Model)
Weight (Including battery)	399g / 409g (MSR model)
Interface	UART(RS-232C or TTL) , Bluetooth Ver2.1 + EDR
Paper supplied	Thermal roll paper, Label roll (80mm wide, 50ø)
Barcode supplied	1-dimension : Code128, Code39, I2/5, Code93 UPC, EAN, KAN, JAN, CODABAR, GS1 Databar 2-dimension : PDF417, QR Code, DATA Matrix, Micro PDF417, Truncated PDF417, Maxicode
Driver	Microsoft Widows XP / VISTA / 7-32bit / 7-64bit Windows CE, Linux, Android OS driver compatible
Black mark	Support black mark detection
H/W spec.	MCU : Renesas 32Bits, FLASH : 8M bytes, RAM : 16M bytes
Receive buffer size	1M bytes
MSR [option]	ISO 7810 / 7811 / 7812 Triple tracks(1&2&3) Reading
Battery	Rechargeable 7.4V DC , 2200mAh (Li-ion)
Battery duration	1 hour continuous printing

(Continue...)

Item	Specification	
Battery Charger	Input (100~250V AC 50~60Hz) Output(8.4VDC/0.8A), 4hours full charge time	
Environment Conditions	Temperature	-10°C ~ 50°C (operating) -10°C ~ 70°C (storage)
	Humidity	30% - 80% (operating) 10% - 90% (storage)
MCBF (Mean Cycle Between failure)	Mechanical	37,000,000 lines
	Head	Approximately 50 Km

< Table 1 >

2. Setting up the printer

2.1. Printer & Accessories

Your printer box should include these items. If any items are damaged or missing, please contact your dealer for assistance.

WSP-R350

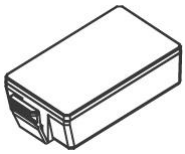

Battery Pack

Thermal roll paper

Belt Clip

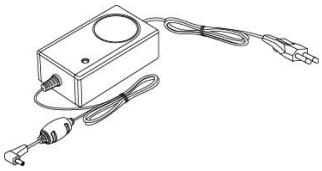

Battery charger adaptor

Communication cable

▼ **OPTIONAL**

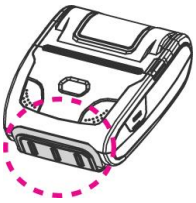

MSR

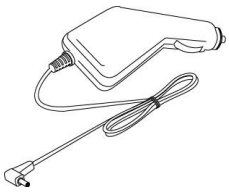

Car charger

2.2. Printer Features

▶ Part Name

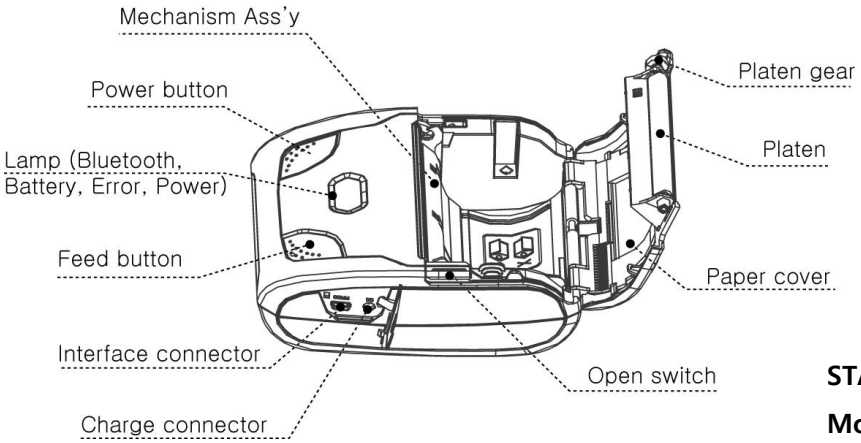

STANDARD Model

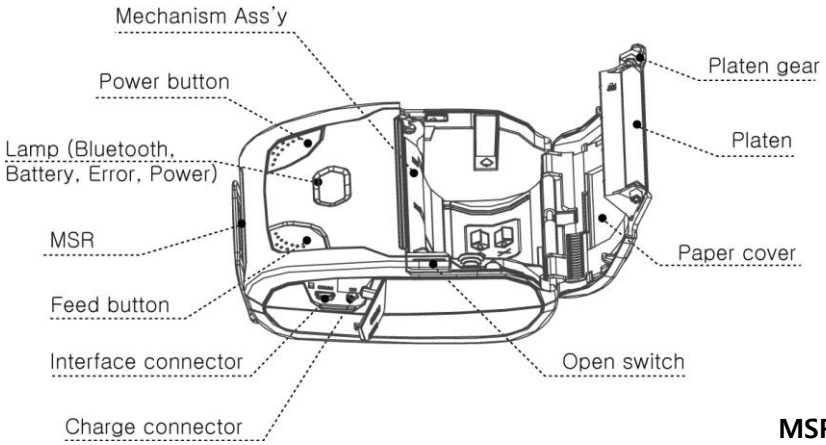

MSR Model

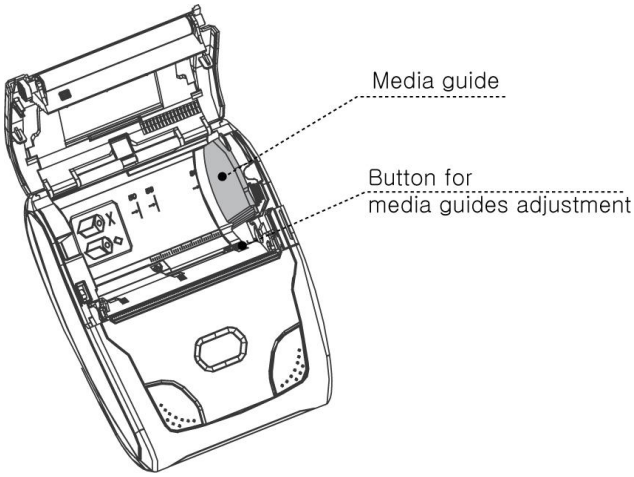
Media guide
Button for
media guides adjustment

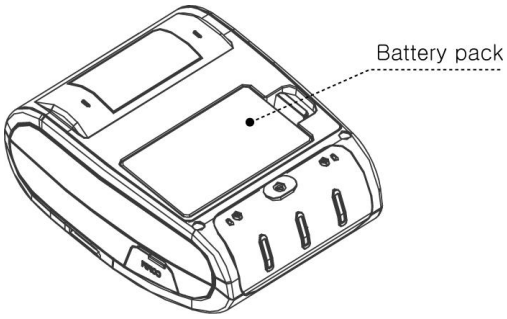
Battery pack

2.3. Dimensions

▶ Standard Model

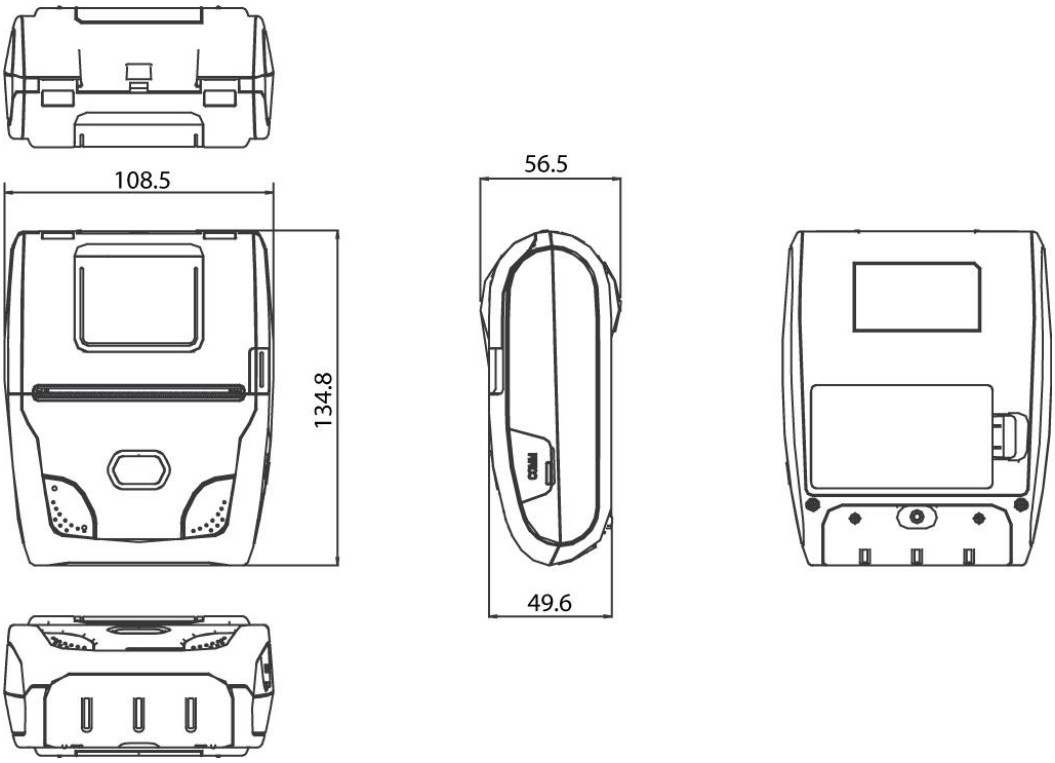

▶ MSR Model

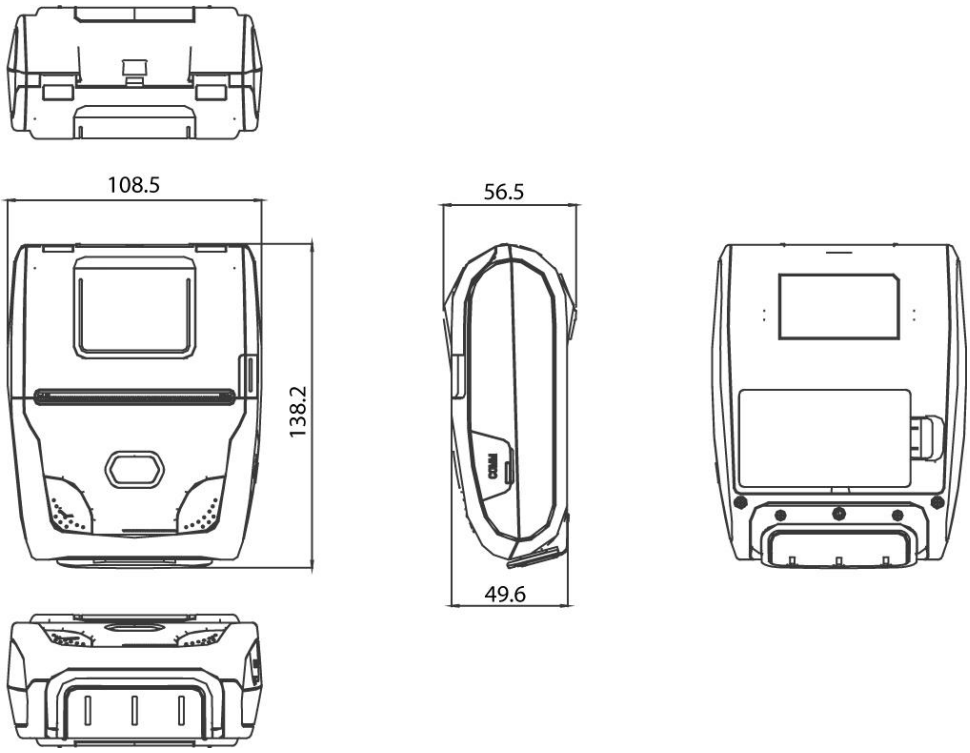

2.4. Replacing the paper roll

Note : Be sure to use paper rolls that meet the specifications.
Do not use paper rolls that have the paper glued to the core because the printer can not detect the paper end correctly.

1. Make sure that the printer is not receiving data; otherwise, data may be lost.
2. Open the paper cover as the “One-Touch” way by pressing the button in the arrow direction like the picture.

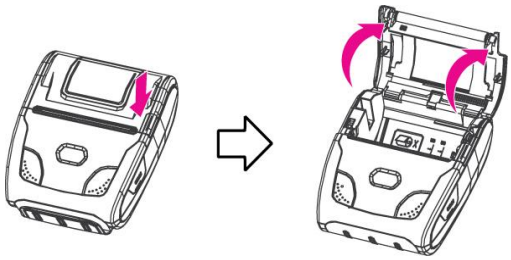

3. Insert the paper roll as shown.

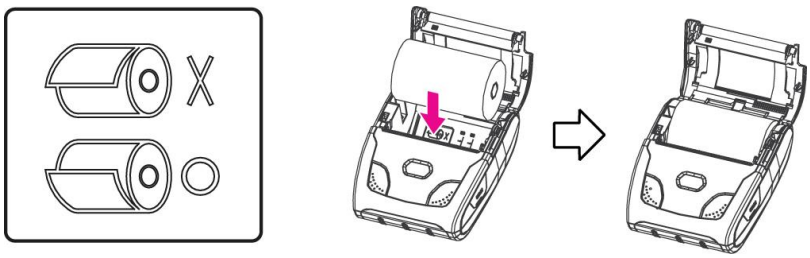

4. Tear the excess paper off using the edge of paper door as a tear bar.

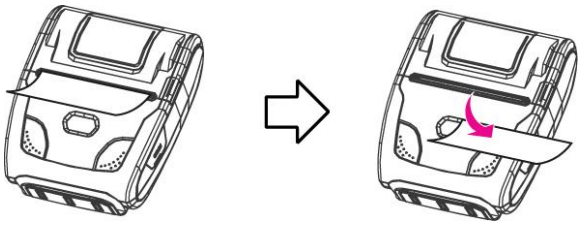

5. To change paper width, move paper guide while pressing paper width change button as shown in the picture.

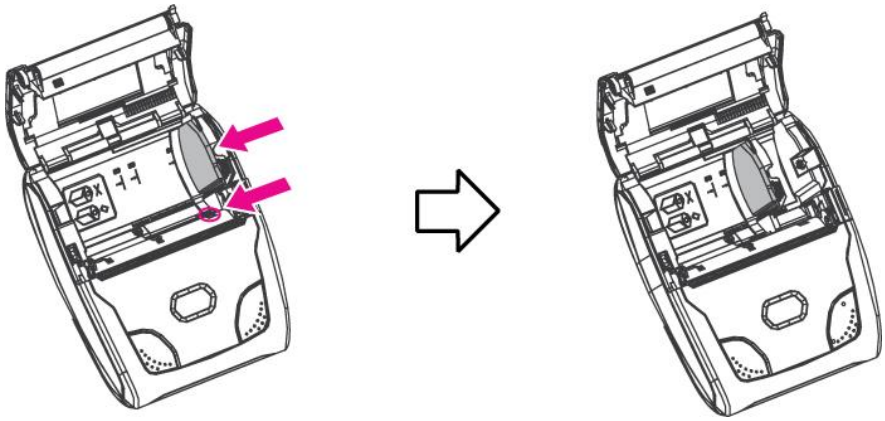

2.5. Power supply

2.5.1. Internal power supply

The following specification is requested for Power supply.

Battery Charger : DC 8.4V/0.8A

Avoid using power supply which its power capacity of power current is extremely high.

2.5.2. Installing the Battery

NOTE :
- Before installing or removing the battery pack, ensure the printer is OFF.
- If the printer is not used for long period of time, remove the battery pack from the printer.

① To install battery pack, proceed as follows:

-Insert the Battery Connector in the direction of the arrow.

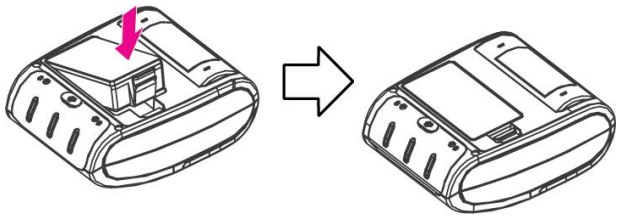

② To remove battery pack, proceed the above order reverse.

CAUTION

RISK OF EXPLOSION IF BATTERY IS REPLACED BY AN INCORRECT TYPE.

DISPOSE OF USED BATTERYIES ACCORDING TO THE INSTRUCTIONS

2.5.3. Recharging the battery

For recharging the battery pack, install the battery pack in the printer.

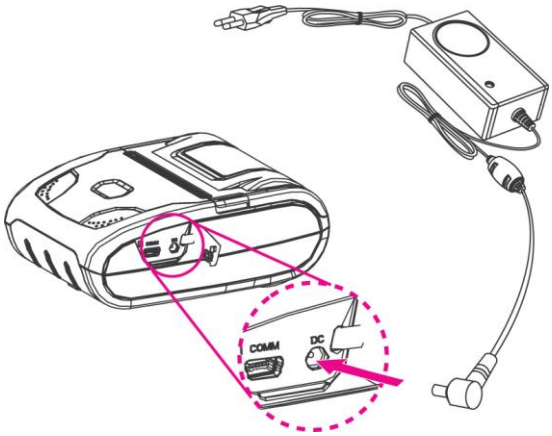

NOTE :
- While charging the printer, turn off the printer power.
- Do not remove the battery during charging.
- The battery is consumable parts and when purchasing, compared to the use hour is gradually decreases. (Warranty 6 month)
- If the printer is not used for a long time, unplug the power cord from the printer and outlet.
- The recharging time depends on the voltage level and ambient temperature of the battery. Normally, if takes about 4 to 5 hours to recharge a battery pack.
- You must use only the supplied adapter.
- Red Lamp : charging the battery.
  Green Lamp: charging is finished.

2.6. Set operation mode

In keeping on pressing the Feed and Power button simultaneously until after the ERROR lamp blinks 5 times, the printer comes out at the circumstance to change the printer mode. (refer to Table 2)

** Only the printer which support iOS Bluetooth interface comes out at the circumstance to change the printer mode. (Bluetooth Mode or Boluetooth(iAP) Mode).

** **Manipulation methods** :

1. Press Feed and Power buttons simultaneously until the ERROR lamp blinks 5 times and then keep pressing two buttons for 2 Seconds.
2. After the printer beeps twice, the Bluetooth mode is changed and it will print the result of change.
3. The changed mode can be checked in the printout.

Example) If the printer is in Bluetooth Mode → Bluetooth(iAP) Mode
If the printer is in Bluetooth(iAP) Mode → Bluetooth Mode

** If you want to change the Bluetooth Mode of printer, you need to disconnect the Bluetooth function of the current paired Smartphone.

** **Methods :**

1. Turn off the Bluetooth function of the current paired Smartphone. (Blue LED is off.)
2. Change the printer mode. (Additionally, we want to recommend you to rest(OFF→ON) the printer and change mode.)

Printer LED status

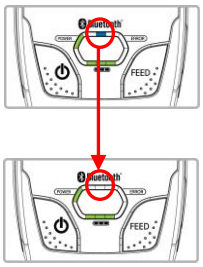

Android status

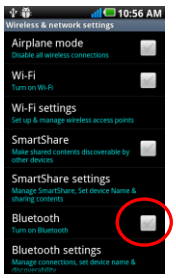

iOS status

- **POWER button** : use for changing OPTION status. (Error Lamp)
- **FEED button** : use for changing MODE status. (Power Lamp)

[Example] The defaults of the printer are :
RS-232C / 9600 bps / 8 data bit / No parity / 1 stop bit / Density low / Mark use / Sensor low / Power down 5 minute

If a user wants to modify the defaults with
Bluetooth / 57600 bps / 7 data bit / Odd parity / 2 stop bit / Density high / Mark no use / Sensor medium1 / Power down no use

▶ Press FEED & POWER Button during the Error Lamp flickers 5 times.
→ You will see the Power Lamp and the Error Lamp flickers once.
→ Press the **POWER Button** twice and the Error Lamp flickers 3 times.
And then, interface mode has set to **Bluetooth** mode.

▶ When you press **FEED button** once again, Power Lamp flickers twice and the Error Lamp flickers once.
→ Press **POWER Button** 3 times, Error Lamp flickers 4 times.
And then, baudrate has set to **57,600 bps**.

▶ When you press **FEED button** once again, Power Lamp flickers 3 times and the Error Lamp flickers twice.
→ Press **POWER Button** once, Error Lamp flickers once.
And then Data Bit has set to **7 data bit**.

▶ When you press **FEED Button** once again, Power Lamp flickers 4 times and the Error Lamp flickers once.
→ Press **POWER Button** once, Error Lamp flickers twice.
And then the Parity bit has set to **Odd parity bit**.

▶ When you press **FEED Button** once again, Power Lamp flickers 5 times and Error Lamp flickers once.

→ Press **POWER Button** once, Error Lamp flickers twice.

And then the density has set to **2 stop bit**.

▶ When you press **FEED Button** once again, Power Lamp flickers 6 times and Error Lamp flickers once.

→ Press **POWER Button** twice, Error Lamp flickers 3 times.

And then the density has set to **Density high**.

▶ When you press **FEED Button** once again, Power Lamp flickers 7 times and Error Lamp flickers twice.

→ Press **POWER Button** once, Error Lamp flickers once

And then the mark has set to **Mark no use**.

▶ When you press **FEED Button** once again, Power Lamp flickers 8 times and Error Lamp flickers once.

→ Press **POWER Button** once, Error Lamp flickers twice

And then the sensor has set to **Sensor medium1**.

▶ When you press **FEED Button** once again, Power Lamp flickers 9 times and Error Lamp flickers five times.

→ Press **POWER Button** once, Error Lamp flickers once

And then the power down has set to **Power down no use**.

If all the mode have set, press the **POWER Button** and the **FEED Button** at the same time after then release the buttons at the same time.

The printer will print out the mode status which has modified.
(Bluetooth / 57600 bps / 7 data bit / Odd parity / 2 stop bit / Density high / Mark no use / Sensor medium1 / Power down no use)

If the status is not correct, please try it again according to the procedure.

MODE	POWER Lamp (Green)	ERROR Lamp (Red)	Option
Communication Port	1	1	UART
		2	Protocol UART
		3	Bluetooth
		4	Protocol Bluetooth
		5	Bluetooth(iAP)
Baud Rate	2	1	9600 bps
		2	19200 bps
		3	38400 bps
		4	57600 bps
		5	115200 bps
Data Bit	3	1	7 Data bit
		2	8 Data bit
Parity	4	1	No Parity
		2	Odd Parity
		3	Even Parity
Stop bit	5	1	1 stop bit
		2	2 stop bit
Density	6	1	Density Low
		2	Density Medium
		3	Density High
Mark	7	1	No use
		2	Use
Sensor	8	1	Low
		2	Medium1
		3	Medium2
		4	High

(Continue…)

MODE	POWER Lamp (Green)	ERROR Lamp (Red)	Option
Power Down	9	1	No use
		2	1 minute
		3	2 minute
		4	3 minute
		5	4 minute
		6	5 minute

< Table 2 >

Notice : Bluetooth(iAP) is the mode which is used in iPod, iPhone and iPad Whole aspect.

3. Interface

3.1. UART

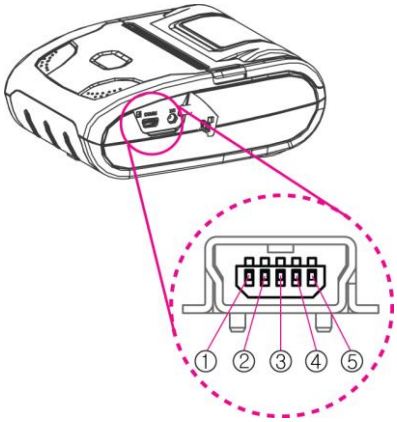

(Fig.3.1)

The WSP-R350 printer has a UART(RS-232C or TTL) interface and is connected by means of a 5 pin mini USB socket. In the following table, the signals present on the Mini- USB socket are listed:

① UART(RS-232C)

Pin no	Signal Name	Direction	Function
1	TxD	Output	Transmit Data
2	RxD	Input	Receive Data
3	CD	-	Cable Detect
4	NC.	-	-
5	GND	-	Ground

NOTE : ● When data receiving, when it removes the communication cable, it loses a data.

3.2. Bluetooth

Category	Specification
Bluetooth Spec.	Bluetooth Ver2.1 +EDR / Class2 (10m)
Frequency Range	2.4GHz ISM BAND
Data Transmission Rate	57600bps Fixed.
Data bit	8 Data bit Fixed.
Parity bit	No parity Fixed.
Stop bit	1 Stop bit Fixed.

- RF exposure warning

  This equipment complies with FCC radiation exposure limits set forth for an uncontrolled environment. This equipment should be installed and operated with minimum 20cm between the radiator and your body.

3.3. Card Reading

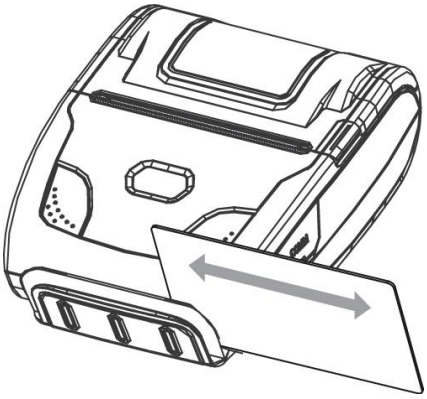

Please take notice that Magnetic Stripe Card should be swapped in direction of arrow.
Card can be read in both

4. Using the printer

4.1. Control panel

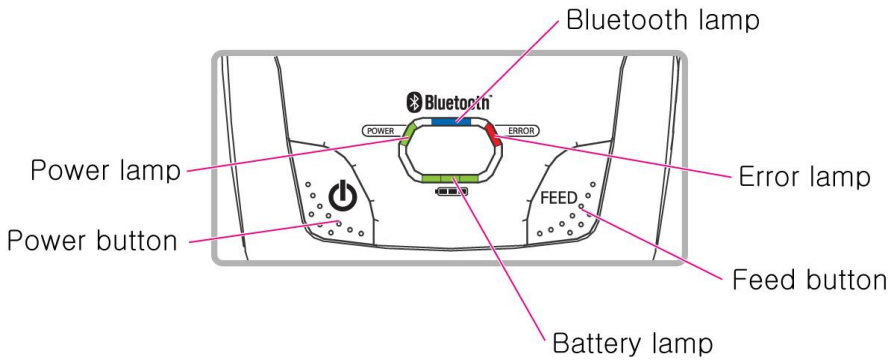

(Fig.4.1)

▶ Button

- **FEED Button:**

When the printer is on, paper can be feed manually by pressing and holding the FEED button for more than one second.

- **POWER Button:**

① When of 5 or more seconds presses and power comes to on or off.

② After pressing the POWER and the FEED button simultaneously, if the ERROR lamp 5 turn signals POWER button is converted with MODE functions.

: In keeping on pressing the **Feed and Power button** simultaneously until after the **ERROR lamp** blinks 5 times, the printer comes out at the circumstance to change the printer mode.

(Refer to **2.6. Set operation mode** for details about mode conversion)

▶ Panel lamp

- **Power** : Printer is ON and ready to receive data.
  (**GREEN**)

- **Error** : Indicates a fault condition or a printer error.
  (**RED**) (i.e : no paper, paper cover opened. etc.)

- **Bluetooth :** Indicates a Bluetooth connection status.
  (**BLUE**)

- **Battery Power :** These lamps(Green) indicated the battery power remaining.
  (**GREEN**) The battery gain in quantity and these lamps are on the decrease.
  If so, you must recharge the battery by using the battery charger.

4.2. The self test

Self-Test prints out the current setting value of printer. The way of self-test is as follows.

1. Insert proper paper into the printer.
2. Power on while pressing feed button to start self-test.
3. Printer will print out the current status. (ROM version and communication mode)
4. And then pattern of characters will be printed out.
5. Self-test will be finished automatically and turned to the standby status.

※ In case printer does not work properly, please contact Woosim customer service center.

4.3. Using the Belt clip

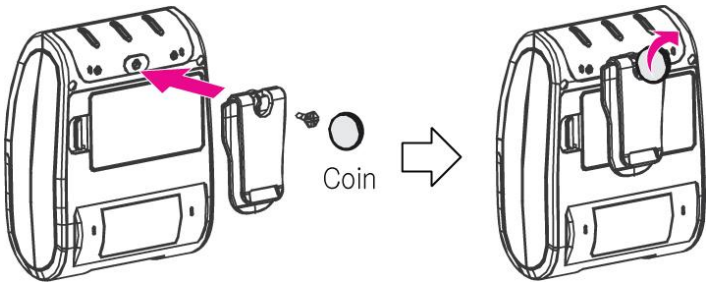

Following the instruction of the arrow, please put the belt clip in the hole and turn and fix the screw to the right by using a thing like a coin.
Afterward, you can use it like the picture below

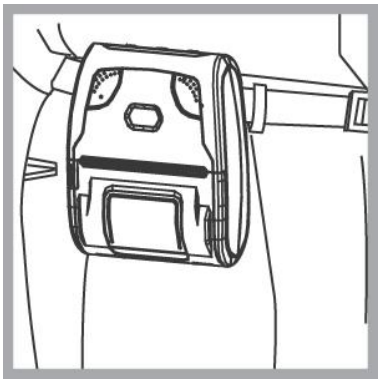

5. Consumable Parts

5.1. Recommended paper

Type	: Thermal Paper
Paper width	: 72mm
Paper thickness	: 60±5㎛
Outer diameter	: Ø50mm or less
Recording side	: Outside of roll

Cautions

1. Do not paste the paper to the core, and the roll paper which has near end mark printing on its near end is recommended.
2. Chemicals or oil may change the color of paper, or printed characters may fade.
3. Change of paper color starts from approx. 70 ℃.
   Pay attention to heat, humidity and sun light.
4. Color of paper may be changed by being scratched by nail or hard metal, etc.

5.2. Printing position

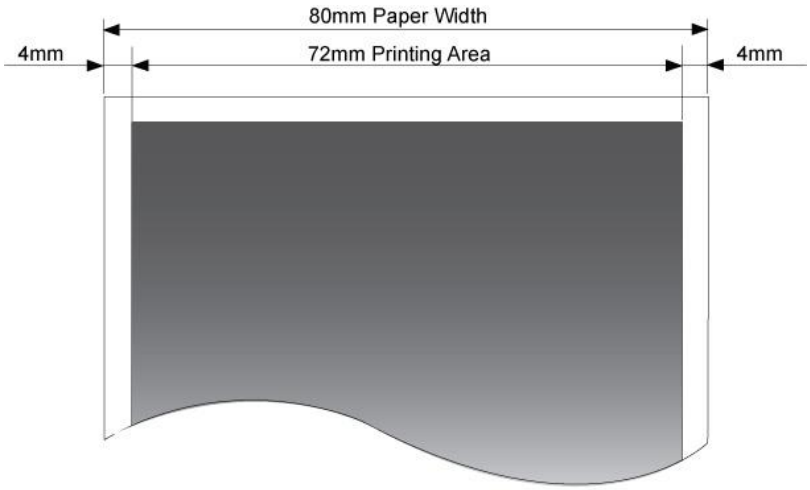

6. Revision History

Date	Version	Comments
Aug. 13. 2014	1.0	Initialize