SPECIFICATION FOR APPROVAL

CUSTOMER: Shenzhen Yaketai Electronic Technology Co., Ltd.

CUST P/N:

YUYAO P/N:

DESCRIPTION: Ø20.5*0.08*80P*11TS-7.7UH-10mm FerriteØ43.5mm+Ø15mm

DATE: 2024.05.16

VERSION: V0

PREPARED BY	CHECKED BY	APPROVED BY	CUSTOMER APPROVE
Shaodong Zheng	Zhendong Yao	Qiancheng Cao	

东莞市煜耀电子科技有限公司

DONGGUAN YUYAO ELECTRONIC TECHNOLOGY CO.,LTD

Factory Add: 21th Building Sun Industry ,Lam village, Tangxia Town, Dongguan City, China.

TEL: 0769-82866410

FAX: 0769-82866409

Version Change History

Rev	Before Change	After Change	Change Date	Approved By
A.0	New Release		2024.05.16	

东莞市煜耀电子科技有限公司

DONGGUAN YUYAO ELECTRONIC TECHNOLOGY CO.,LTD

TEL: 0769-82866410 FAX: 0769-82866409 Email: linkqi@yeah.net

SPECIFICATION APPROVAL

DESCRIPTION:	Ø20.5*0.08*80P*11TS-7.7UH-10mm Ferrite Ø43.5mm+Ø15mm	VERSION:	V0	**CUSTOMER:**	Shenzhen Yaketai Electronic Technology Co., Ltd.
				CUST P/N:	
				YUYAO P/N:	

1. DIMENSION:(mm)

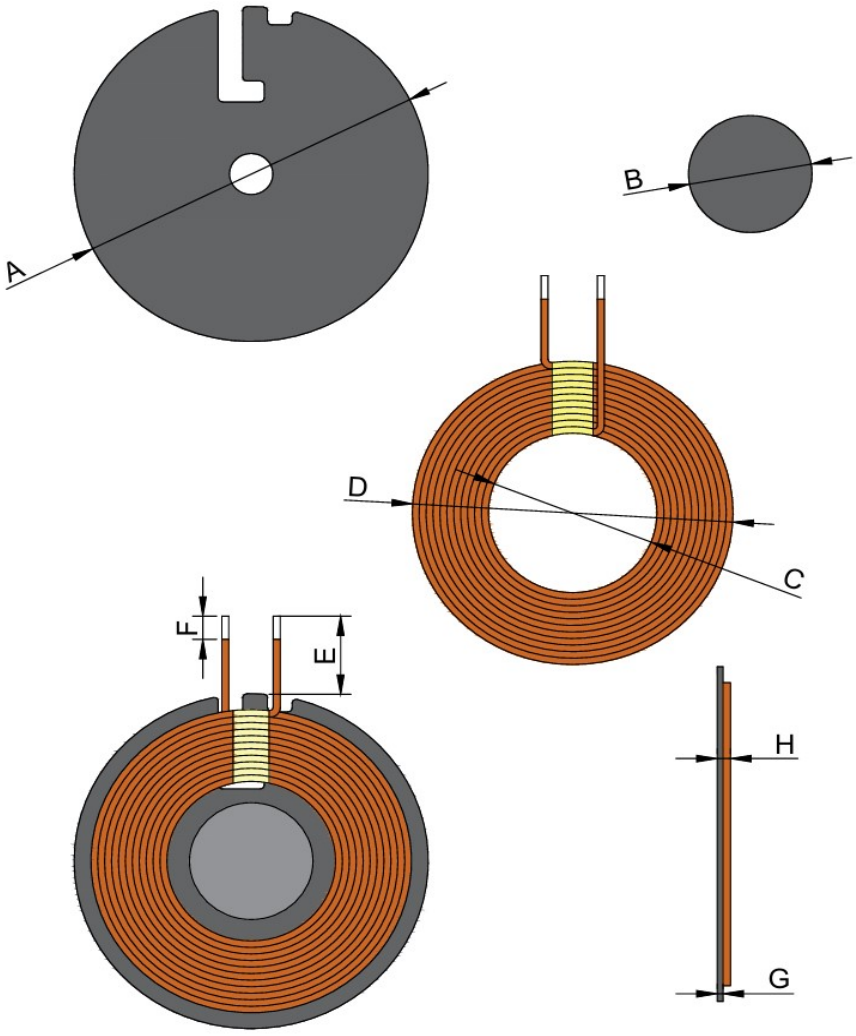

A	43.5±0.5
B	15±0.5
C	20.5±0.5
D	39±1
E	10±1.5
F	3±1.5
G	0.7±0.1
H	2.4 Max
I	
J	
K	
L	

PREPARED BY/DATE	CHECKED BY/DATE
Shaodong Zheng /2024.05.16	Zhendong Yao/2024.05.16

DONGGUAN YUYAO ELECTRONIC TECHNOLOGY CO.,LTD

TEL: 0769-82866410 FAX: 0769-82866409 Email: linkqi@yeah.net

SPECIFICATION APPROVAL

DESCRIPTION:	Ø20.5*0.08*80P*11TS-7.7UH-10mm FerriteØ43.5mm+Ø15mm	VERSION:	V0	**CUSTOMER:**	Shenzhen Yaketai Electronic Technology Co., Ltd.
				CUST P/N:	
				YUYAO P/N:	

2. SCHEMATIC DIAGRAM:

3. WINDING SPECIFICATION:

NO	TERMINAL		WIRE	TURNS	WINDING DIRECTION
1	S	F	0.08*80P Litz wire	11TS	CCW

4. ELECTRICAL CHARACTERISTICS:

TEMPERATURE:25℃±10℃, RELATIVE HUMIDITY:65±20％

NO	ITEM	TERMINAL	SPECIFICATION	TEST FREQUENCY	TEST EQUIPMENTS
1	IND	S-F	4.6UH±10％only coil	100KHZ/1V	LCZ METER1062B
2	IND	S-F	7.7UH±10 W/ferrite	100KHZ/1V	LCZ METER1062B
3	DCR	S-F	65mΩ MAX	1KHZ/1V	TH2810
4	Q factor	S-F	55MIN	100KHZ/1V	LCZ METER1062B

PREPARED BY/DATE	CHECKED BY/DATE
Shaodong Zheng /2024.05.16	Zhendong Yao/2024.05.16

DONGGUAN YUYAO ELECTRONIC TECHNOLOGY CO.,LTD

TEL: 0769-82866410 FAX: 0769-82866409 Email: linkqi@yeah.net

SPECIFICATION APPROVAL

DESCRIPTION :	Ø20.5*0.08*80P*11TS-7.7UH-10mm FerriteØ43.5mm+Ø15mm	VERSION:	V0	**CUSTOMER:**	Shenzhen Yaketai Electronic Technology Co., Ltd.
				CUST P/N:	
				YUYAO P/N:	

5. PRODUCT PICTURE

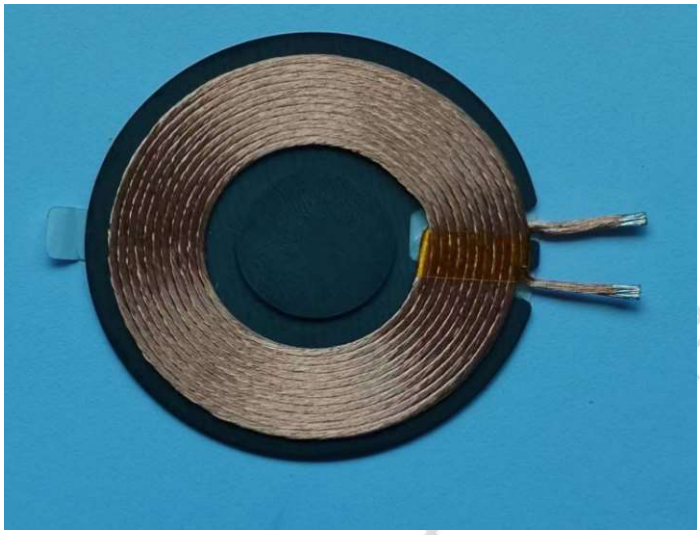

6. MATERIALS LIST

NO	MATERIAL NAME	DESCRIPTION	MANUFACTURER
1	Wire	0.08*80P Litz wire	RH
2	Ferrite	Ø43.5mm Mn-zn Ø15 Mn-zn	KHF
3	Tin	Lead-free solder bar	DB
4	Glue	BE885-9007	BR
5	Faxing Tape	Width:6mm high-temperature tape	
6	Self-adhesive		
7	Paking	EPE foam+carton	

REMARK: All the materials meet the requirements of ROHS 2.0 and REACH

PREPARED BY/DATE	CHECKED BY/DATE
Shaodong Zheng /2024.05.16	Zhendong Yao/2024.05.16

东莞市煜耀电子有限公司

DONGGUAN YUYAO ELECTRONIC TECHNOLOGY CO.,LTD
TEL: 0769-82866410 FAX: 0769-82866409 Email: linkqi@yeah.net