Dreamus Corp.

# APPROVAL SHEET

| P1 | | | |
|---|---|---|---|
| NO | MODEL | FREQUENCY | |
| 1 | HWI-ABG-P1 | WIFI 2.4GHz/BT | 2400 ~ 2500 MHz |
| | | WIFI 5GHz | 5170 ~ 5825 MHz |

| SUPPLIER | | | CUSTOMER | | |
|---|---|---|---|---|---|
| Engineer | Review | Approved | Engineer | Review | Approved |
| | | | | | |
| 24/03/11 | | 24/03/11 | | | |

HANWOOL TECHNOLOGY CO., LTD
#1002 IT303-DONG, PUCHONTECHNOPARK Ⅲ 36-1
SAMJUNG-DONG, OHJUNG-GU, KYOUNG GI-DO, KOREA
TEL: 032) 624-2555
FAX: 032) 624-2559

# HISTORY SHEET

| ITEM | FPCB ANTENNA | Developed by | Kyoung-Min Lee | |
|---|---|---|---|---|
| Part Name | HWI-ABG-P1 | Director | | |

| Rev. No. | Date | Description | Etc. |
|---|---|---|---|
| 0 | 2024-03-11 | Initial Version | |
| | | | |
| | | | |
| | | | |
| | | | |
| | | | |
| | | | |
| | | | |
| | | | |
| | | | |
| | | | |
| | | | |
| | | | |
| | | | |
| | | | |

# ANTENNA SPECIFICATION

1. MODEL: HWI-ABG-P1

2. APPLICATION:

This specification is provided for WIFI 2.4, 5GHz, BT ANTENNA.

3 ANTENNA used condition

■Portable ■Fixing ■Movement ■Out-door ■In-door ■Etc( )

4. ANTENNA Drawing

#3. Attached : Drawing paper

5. Electrical specification and performance

Satisfied next data with real used or similar environment conditions.

| No. | ELECTRICAL DATA | SPECIFICATIONS | | REMARK |
|---|---|---|---|---|
| 5. 1 | FREQUENCY RANGE | WIFI 2.4GHz /BT | 2400 ~ 2500 MHz | |
| | | WIFI 5GHz | 5170 ~ 5825 MHz | |
| 5. 2 | IMPEDANCE | 50 Ω NOMINAL | | |
| 5. 3 | V. S. W. R | WIFI 2.4GHz /BT | Less than 1 : 3.25 | #1. Attached |
| | | WIFI 5GHz | Less than 1 : 2.84 | |
| 5. 4 | PEAK GAIN | WIFI 2.4GHz /BT | 0.78 dBi | #2. Attached |
| | | WIFI 5GHz | 2.55 dBi | |
| 5. 5 | RADIATION PATTERN | OMNI - DIRECTIONAL | | |
| 5. 6 | POLARIZATION | LINEAR | | |

6. Hardware specification and mechanical

| No. | MECHANICAL | SPECIFICATIONS | REMARK |
|---|---|---|---|
| 2. 6. 1 | FPCB Size [W X H X T] | 23.80 X 25.85 X 0.75 (mm) | |

7. SINUSOIDAL VIBRATION

Vibration Frequencies : 5- 55 Hz (1 cycle)
Sweep Rate : 1 cycle/min
Maximum Amplitude : A - 1 mm
Maximum Acceleration: 2 g
Measuring method
Antenna is combined in the test equipment.
The vibration is done X and Y direction (left, right, up and down) according to below image.
It continued for 2 hours each direction.

8. OPERATING TEMPERATURE

Temperature : - 40℃ / +70℃
Demands : Set Antenna and Cable for 72 hours each temperature.
No visual and mechanical changes.
The fitting and mold will be unchanged mechanically during the test.
The antenna shall satisfy the electrical data

9. HUMIDITY

Condition : 95% / +70℃
Measuring method
Antenna is placed in climatic chamber for 72 hours.
Antenna is taken out from the chamber and measured
after another 24 hours in room temperature
Demands : No visual and mechanical changes.
The fitting and mold will be unchanged mechanically during the test.
The antenna shall satisfy the electrical data.

10. TEST and Q/C

This specification is according to fixed demands and suitable Hanwool technology Q/C provision.
But it is possible to skip No. 7~9 demands, after consultation with buyer.

- #1. Attached : VSWR

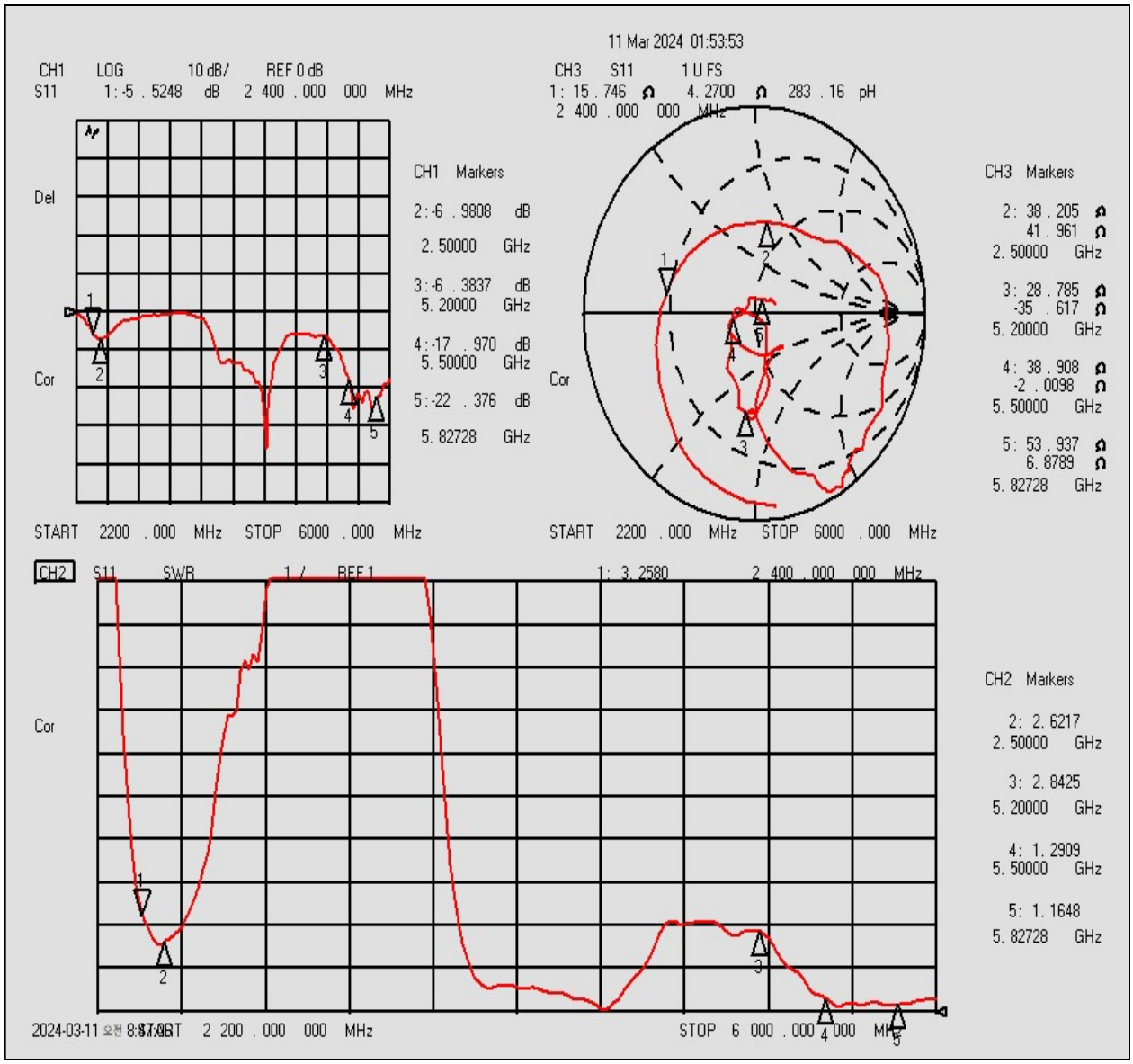


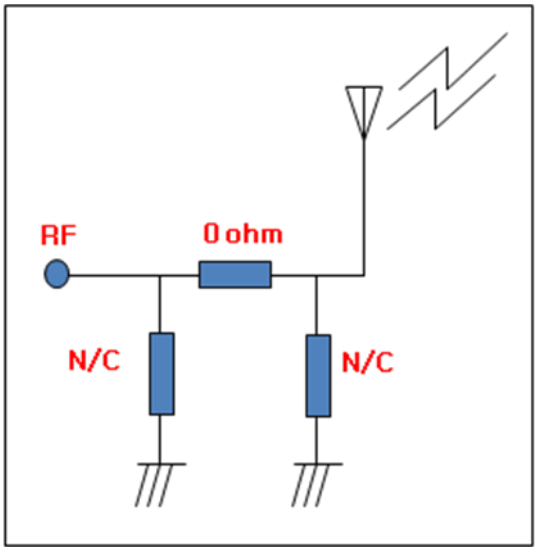

- #2. Attached : RADIATION PATTERN(GAIN)_WIFI 2.4GHz/BT

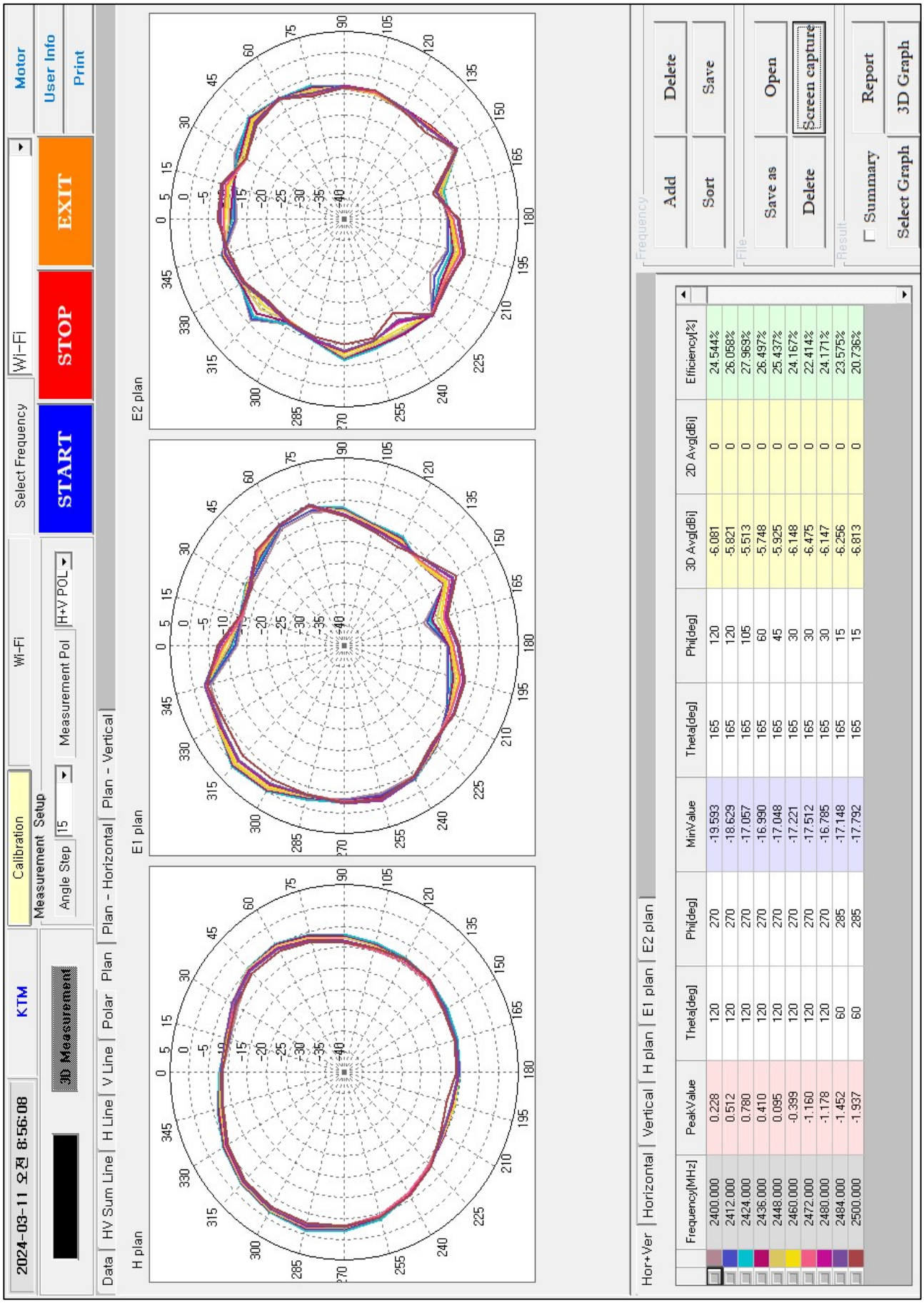


| Frequency[MHz] | PeakValue | Theta[deg] | Phi[deg] | MinValue | Theta[deg] | Phi[deg] | 3D Avg[dBi] | 2D Avg[dBi] | Efficiency[%] |
|---|---|---|---|---|---|---|---|---|---|
| 2400.000 | 0.228 | 120 | 270 | -19.593 | 165 | 120 | -6.081 | 0 | 24.544% |
| 2412.000 | 0.512 | 120 | 270 | -18.629 | 165 | 120 | -5.821 | 0 | 26.058% |
| 2424.000 | 0.780 | 120 | 270 | -17.057 | 165 | 105 | -5.513 | 0 | 27.969% |
| 2436.000 | 0.410 | 120 | 270 | -16.990 | 165 | 60 | -5.748 | 0 | 26.497% |
| 2448.000 | 0.095 | 120 | 270 | -17.048 | 165 | 45 | -5.925 | 0 | 25.437% |
| 2460.000 | -0.399 | 120 | 270 | -17.221 | 165 | 30 | -6.148 | 0 | 24.167% |
| 2472.000 | -1.160 | 120 | 270 | -17.512 | 165 | 30 | -6.475 | 0 | 22.414% |
| 2480.000 | -1.178 | 120 | 270 | -16.785 | 165 | 30 | -6.147 | 0 | 24.171% |
| 2484.000 | -1.452 | 60 | 285 | -17.148 | 165 | 15 | -6.256 | 0 | 23.575% |
| 2500.000 | -1.937 | 60 | 285 | -17.792 | 165 | 15 | -6.813 | 0 | 20.736% |

- #3. Attached : RADIATION PATTERN(GAIN)_ WIFI 5GHz

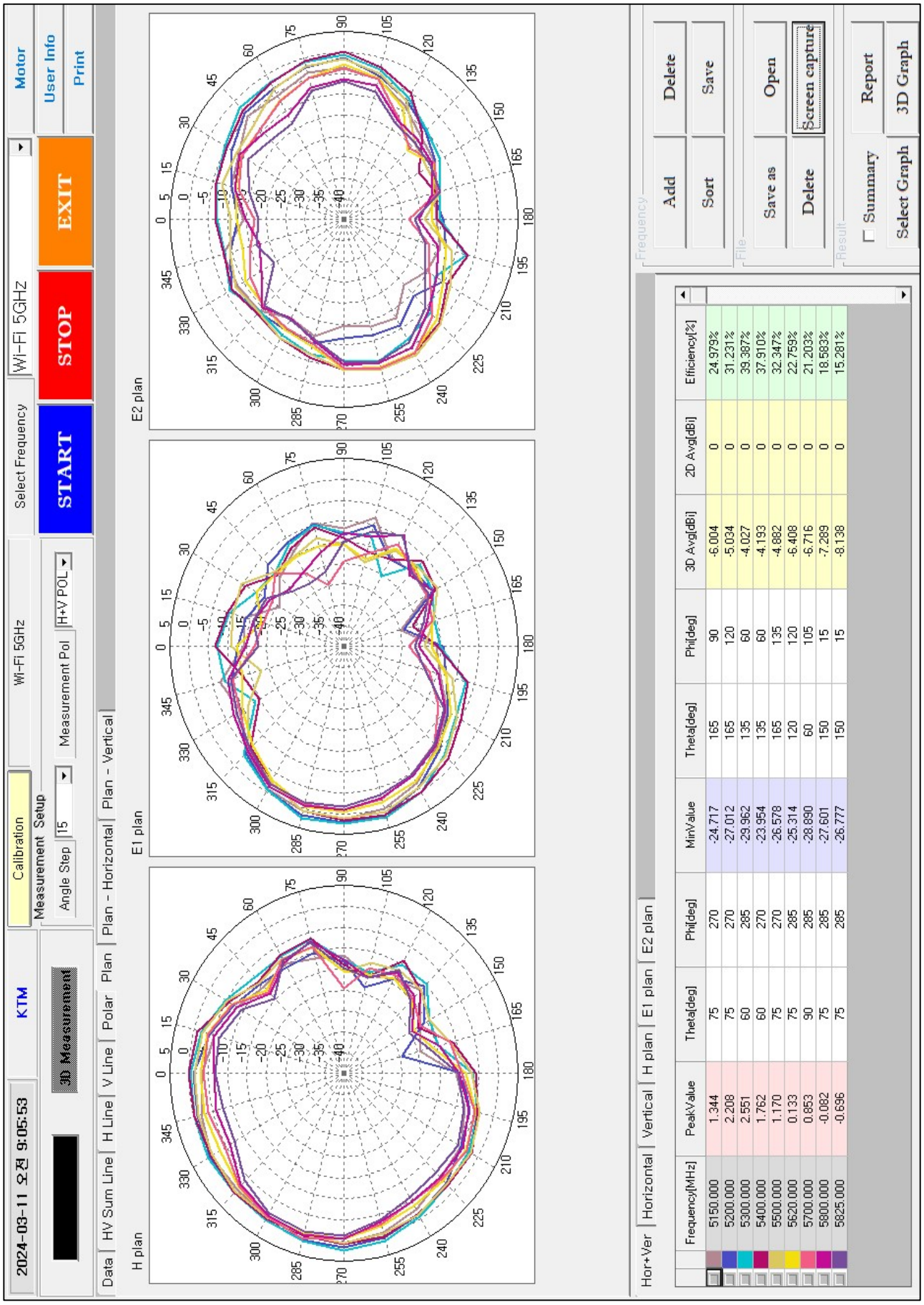


| Frequency[MHz] | PeakValue | Theta[deg] | Phi[deg] | MinValue | Theta[deg] | Phi[deg] | 3D Avg[dBi] | 2D Avg[dBi] | Efficiency[%] |
|---|---|---|---|---|---|---|---|---|---|
| 5150.000 | 1.344 | 75 | 270 | -24.717 | 165 | 90 | -6.004 | 0 | 24.979% |
| 5200.000 | 2.208 | 75 | 270 | -27.012 | 165 | 120 | -5.034 | 0 | 31.231% |
| 5300.000 | 2.551 | 60 | 285 | -29.962 | 135 | 60 | -4.027 | 0 | 39.387% |
| 5400.000 | 1.762 | 60 | 270 | -23.954 | 135 | 60 | -4.193 | 0 | 37.910% |
| 5500.000 | 1.170 | 75 | 270 | -26.578 | 165 | 135 | -4.882 | 0 | 32.347% |
| 5620.000 | 0.133 | 75 | 285 | -25.314 | 120 | 120 | -6.408 | 0 | 22.759% |
| 5700.000 | 0.853 | 90 | 285 | -28.890 | 60 | 105 | -6.716 | 0 | 21.203% |
| 5800.000 | -0.082 | 75 | 285 | -27.601 | 150 | 15 | -7.289 | 0 | 18.583% |
| 5825.000 | -0.696 | 75 | 285 | -26.777 | 150 | 15 | -8.138 | 0 | 15.281% |
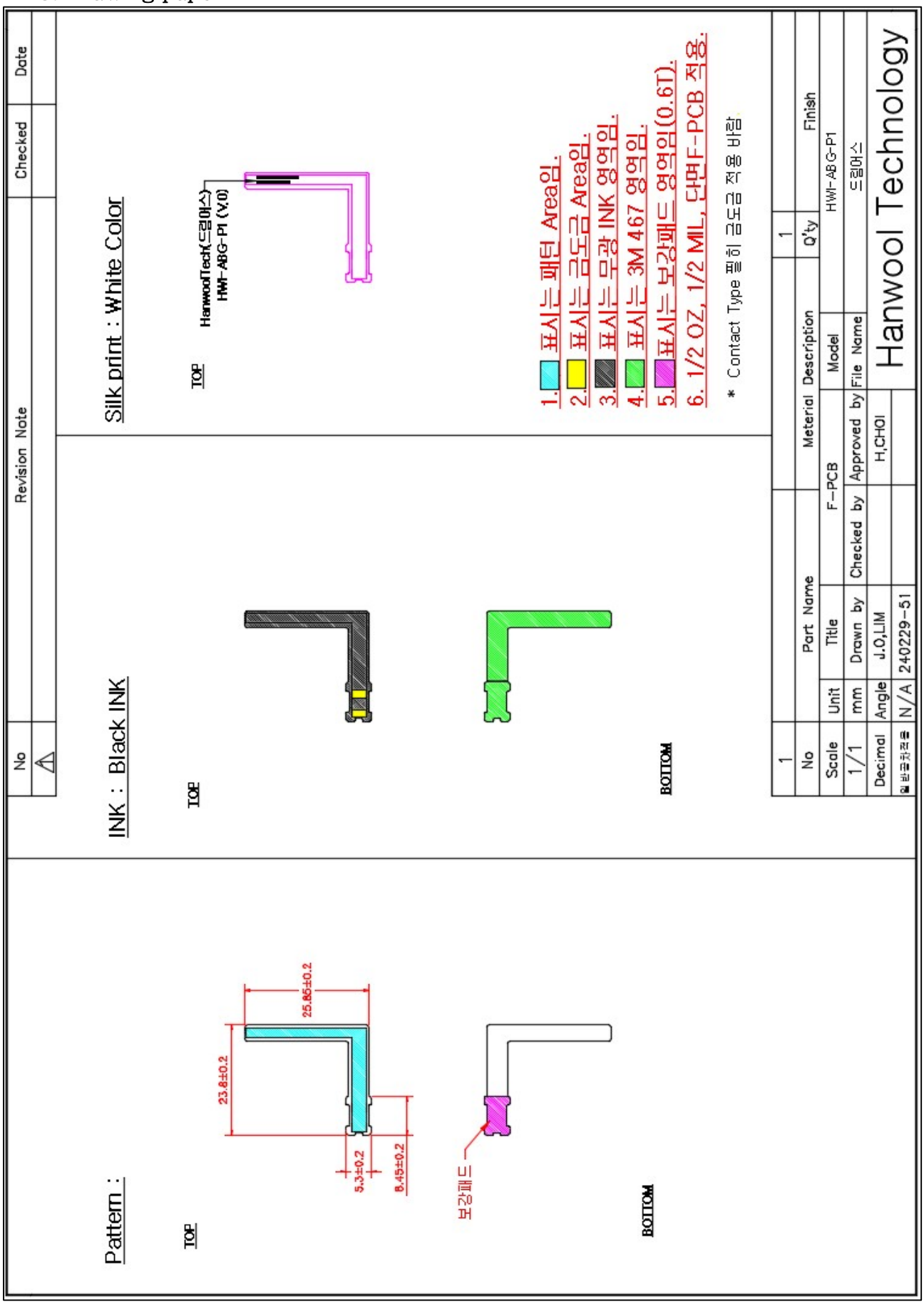
- #3. Drawing paper