FCC 47 CFR PART 15 SUBPART C & INDUSTRY CANADA RSS-210 (Class II Permissive Change)

TEST REPORT

For

Broadcom 802.11a/b/g/n/ac WLAN + Bluetooth 4.0 NGFF2230 Mini Card

Model: BCM943162ZP

Trade Name: Broadcom

Issued to

Broadcom Corporation
190 Mathilda Avenue, Sunnyvale, CA 94086

Issued by

Compliance Certification Services Inc.
No.11, Wugong 6th Rd., Wugu Dist.,
New Taipei City 24891, Taiwan. (R.O.C.)
http://www.ccsrf.com
service@ccsrf.com
Issued Date: February 10, 2015

Testing Laboratory
1309

Note: *This report shall not be reproduced except in full, without the written approval of Compliance Certification Services Inc. This document may be altered or revised by Compliance Certification Services Inc. personnel only, and shall be noted in the revision section of the document.*

Revision History

Rev.		Issue Date		Revisions	Effect Page	Revised By
00		February 10, 2015		Initial Issue	ALL	Kelly Cheng

TABLE OF CONTENTS

1. TEST RESULT CERTIFICATION 4

2. EUT DESCRIPTION 5

3. TEST METHODOLOGY 6

3.1 EUT CONFIGURATION 6
3.2 EUT EXERCISE 6
3.3 GENERAL TEST PROCEDURES 6
3.4 FCC PART 15.205 RESTRICTED BANDS OF OPERATIONS 7
3.5 DESCRIPTION OF TEST MODES 8

4. INSTRUMENT CALIBRATION 9

4.1 MEASURING INSTRUMENT CALIBRATION 9
4.2 MEASUREMENT EQUIPMENT USED 9
4.3 MEASUREMENT UNCERTAINTY 10

5. FACILITIES AND ACCREDITATIONS 11

5.1 FACILITIES 11
5.2 EQUIPMENT 11
5.3 LABORATORY ACCREDITATIONS AND LISTING 11
5.4 TABLE OF ACCREDITATIONS AND LISTINGS 12

6. SETUP OF EQUIPMENT UNDER TEST 13

6.1 SETUP CONFIGURATION OF EUT 13
6.2 SUPPORT EQUIPMENT 13

7. FCC PART 15 REQUIREMENTS & RSS 210 REQUIREMENTS 14

7.1 MAXIMUM OUTPUT POWER 14
7.2 RADIATED UNDESIRABLE EMISSION 16

APPENDIX I PHOTOGRAPHS OF TEST SETUP 30

1. TEST RESULT CERTIFICATION

Applicant: Broadcom Corporation
190 Mathilda Avenue, Sunnyvale, CA 94086

Equipment Under Test: Broadcom 802.11a/b/g/n/ac WLAN + Bluetooth 4.0 NGFF2230 Mini Card

Trade Name: Broadcom

Model: BCM943162ZP

Date of Test: January 31~February 1, 2015

APPLICABLE STANDARDS	
STANDARD	**TEST RESULT**
FCC 47 CFR Part 15 Subpart C & Industry Canada RSS-210 Issue 8 December, 2010	No non-compliance noted

We hereby certify that:

The above equipment was tested by Compliance Certification Services Inc. The test data, data evaluation, test procedures, and equipment configurations shown in this report were made in accordance with the procedures given in ANSI C63.4: 2009 and the energy emitted by the sample EUT tested as described in this report is in compliance with the requirements of FCC Rules Part 15.207, 15.209, 15.247 and Industry Canada RSS-210.

The test results of this report relate only to the tested sample EUT identified in this report.

Approved by:

Miller Lee
Section Manager
Compliance Certification Services Inc.

Reviewed by:

Angel Cheng
Section Manager
Compliance Certification Services Inc.

2. EUT DESCRIPTION

Product	Broadcom 802.11a/b/g/n/ac WLAN + Bluetooth 4.0 NGFF2230 Mini Card
Trade Name	Broadcom
Model Number	BCM943162ZP
Model Discrepancy	N/A
Received Date	January 12, 2015
Power Supply	Power form host device.

Operating Frequency Range & Number of Channels

	Mode	Frequency Range (MHz)	Number of Channels
UNII Band IV	IEEE 802.11a	5725~5850	5 Channels
	IEEE 802.11n HT 20 MHz	5725~5850	5 Channels
	IEEE 802.11n HT 40 MHz	5755~5795	2 Channels
	IEEE 802.11n HT 80 MHz	5775	1 Channels

Transmit Power

	Mode	Frequency Range (MHz)	Output Power (dBm)	Output Power (w)
UNII Band IV	IEEE 802.11a	5725~5850	20.10	0.1023
	IEEE 802.11n HT 20 MHz	5725~5850	20.10	0.1023
	IEEE 802.11n HT 40 MHz	5755~5795	20.20	0.1047
	IEEE 802.11n HT 80 MHz	5775	16.10	0.0407

Modulation Technique	OFDM (QPSK, BPSK, 16-QAM, 64-QAM)
Transmit Data Rate	IEEE 802.11a mode: 54, 48, 36, 24, 18, 12, 9, 6 Mbps IEEE 802.11n HT 20 mode: OFDM (6.5, 7.2, 13, 14.4, 14.44, 19.5, 21.7, 26, 28.89, 28.9, 39, 43.3, 43.33 52, 57.78, 57.8, 58.5, 65.0, 72.2, 78, 86.67, 104, 115.56, 117, 130, 144.44 Mbps) IEEE 802.11n HT 40 mode: OFDM (13.5, 15, 27, 30, 40.5, 45, 54, 60, 81, 90, 108, 120, 121.5, 135, 150, 162, 180, 216, 240, 243, 270, 300 Mbps) IEEE 802.11n HT 80 mode: OFDM (29.3, 58.5, 87.8, 117, 175.5, 234, 263.3, 292.5, 351, 390, 468, 526.5, 585, 702, 780 Mbps)
Antenna Specification	1. High-Tek Electronics Co.,Ltd P/N: 025.9006N.0011 (Main) / -1.67 dBi 025.9006O.0011 (Aux) / -3.18 dBi 2. Wistron NeWeb Corporation P/N: 025.9006N.0001 (Main) / -1.57 dBi 025.9006O.0001 (Aux) / 1.35 dBi
Antenna Designation	PIFA Antenna
Host Brand	lenovo
Host Model Name	Flex 3-1570 Flex 3-1535
Class II Permissive Change	Adding portable platforms Flex 3-1570, Flex 3-1535, These hosts have the same antenna type as originally approved with lower gains.

Remark: *The sample selected for test was engineering sample that approximated to production product and was provided by manufacturer.*

3. TEST METHODOLOGY

The tests documented in this report were performed in accordance with ANSI C63.4 and FCC CFR 47 2.1046, 2.1047, 2.1049, 2.1051, 2.1053, 2.1055, 2.1057, 15.207, 15.209 and 15.247.

The tests documented in this report were performed in accordance with IC RSS-210, IC RSS-Gen, IC RSS-102, IC RSS-212, and ANSI C63.4.

This submittal(s) (test report) is intended for IC Certification with Industry Canada RSS-210.

3.1 EUT CONFIGURATION

The EUT configuration for testing is installed for RF field strength measurement to meet the Commissions requirement, and is operated in a manner intended to generate the maximum emission in a continuous normal application.

3.2 EUT EXERCISE

The EUT was operated in the engineering mode to fix the TX frequency that was for the purpose of the measurements.

According to its specifications, the EUT must comply with the requirements of the Section 15.207, 15.209 and 15.247 under the FCC Rules Part 15 Subpart C.

The tests documented in this report were performed in accordance with IC RSS-210, IC RSS-Gen, IC RSS-102, and ANSI C63.4.

3.3 GENERAL TEST PROCEDURES

Conducted Emissions

The EUT is placed on the turntable, which is 0.8 m above ground plane. According to the requirements in Section 13.1.4.1 of ANSI C63.4 Conducted emissions from the EUT measured in the frequency range between 0.15 MHz and 30MHz using CISPR Quasi-peak and average detector modes.

Radiated Emissions

The EUT is placed on a turn table, which is 0.8 m above ground plane. The turntable shall rotate 360 degrees to determine the position of maximum emission level. EUT is set 3m away from the receiving antenna, which varied from 1m to 4m to find out the highest emission. And also, each emission was to be maximized by changing the polarization of receiving antenna both horizontal and vertical. In order to find out the maximum emissions, exploratory radiated emission measurements were made according to the requirements in Section 13.1.4.1 of ANSI C63.4.

3.4 FCC PART 15.205 RESTRICTED BANDS OF OPERATIONS

(a) Except as shown in paragraph (d) of this section, only spurious emissions are permitted in any of the frequency bands listed below:

MHz	MHz	MHz	GHz
0.090 - 0.110	16.42 - 16.423	399.9 - 410	4.5 - 5.15
[1]0.495 - 0.505	16.69475 - 16.69525	608 - 614	5.35 - 5.46
2.1735 - 2.1905	16.80425 - 16.80475	960 - 1240	7.25 - 7.75
4.125 - 4.128	25.5 - 25.67	1300 - 1427	8.025 - 8.5
4.17725 - 4.17775	37.5 - 38.25	1435 - 1626.5	9.0 - 9.2
4.20725 - 4.20775	73 - 74.6	1645.5 - 1646.5	9.3 - 9.5
6.215 - 6.218	74.8 - 75.2	1660 - 1710	10.6 - 12.7
6.26775 - 6.26825	108 - 121.94	1718.8 - 1722.2	13.25 - 13.4
6.31175 - 6.31225	123 - 138	2200 - 2300	14.47 - 14.5
8.291 - 8.294	149.9 - 150.05	2310 - 2390	15.35 - 16.2
8.362 - 8.366	156.52475 -	2483.5 - 2500	17.7 - 21.4
8.37625 - 8.38675	156.52525	2655 - 2900	22.01 - 23.12
8.41425 - 8.41475	156.7 - 156.9	3260 - 3267	23.6 - 24.0
12.29 - 12.293	162.0125 - 167.17	3332 - 3339	31.2 - 31.8
12.51975 - 12.52025	167.72 - 173.2	3345.8 - 3358	36.43 - 36.5
12.57675 - 12.57725	240 - 285	3600 - 4400	([2])
13.36 - 13.41	322 - 335.4		

[1] Until February 1, 1999, this restricted band shall be 0.490-0.510 MHz.

[2] Above 38.6

(b) Except as provided in paragraphs (d) and (e), the field strength of emissions appearing within these frequency bands shall not exceed the limits shown in Section 15.209. At frequencies equal to or less than 1000 MHz, compliance with the limits in Section 15.209 shall be demonstrated using measurement instrumentation employing a CISPR quasi-peak detector. Above 1000 MHz, compliance with the emission limits in Section 15.209 shall be demonstrated based on the average value of the measured emissions. The provisions in Section 15.35 apply to these measurements.

3.5 DESCRIPTION OF TEST MODES

The EUT (model: BCM943162ZP) had been tested under operating condition.

Software used to control the EUT for staying in continuous transmitting mode was programmed.

After verification, all tests were carried out with the worst case test modes as shown below except radiated spurious emission below 1GHz, which worst case was in normal link mode only.

UNII Band VI:

IEEE 802.11a mode:
Channel Low (5745MHz), Channel Mid (5785MHz) and Channel High (5825MHz) with 6Mbps data rate were chosen for full testing.

IEEE 802.11n HT 20 MHz mode:
Channel Low(5745MHz), Channel Mid(5785MHz) and Channel High(5825MHz) with 6.5Mbps data rate were chosen for full testing.

IEEE 802.11n HT 40 MHz mode:
Channel Low(5755MHz) and Channel High(5795MHz) with 13.5Mbps data rate were chosen for full testing.

IEEE 802.11n HT 80 mode:
Channel Low(5775MHz) with 29.3Mbps data rate were chosen for full testing.

The field strength of spurious emission was measured in the following position: EUT stand-up position (Z axis), lie-down position (X, Y axis). The worst emission was found in lie-down position (X axis) and the worst case was recorded.

4. INSTRUMENT CALIBRATION

4.1 MEASURING INSTRUMENT CALIBRATION

The measuring equipment, which was utilized in performing the tests documented herein, has been calibrated in accordance with the manufacturer's recommendations for utilizing calibration equipment, which is traceable to recognized national standards.

4.2 MEASUREMENT EQUIPMENT USED

Equipment Used for Emissions Measurement

Remark: *Each piece of equipment is scheduled for calibration once a year and Loop Antenna is scheduled for calibration once three years.*

Wugu 966 Chamber A				
Name of Equipment	**Manufacturer**	**Model**	**Serial Number**	**Calibration Due**
Spectrum Analyzer	Agilent	E4446A	US42510268	09/18/2015
EMI Test Receiver	R&S	ESCI	100064	05/30/2015
Bilog Antenna	Sunol Sciences	JB3	A030105	08/19/2015
Horn Antenna	EMCO	3117	00055165	01/26/2016
Turn Table	CCS	CC-T-1F	N/A	N.C.R
Antenna Tower	CCS	CC-A-1F	N/A	N.C.R
Controller	CCS	CC-C-1F	N/A	N.C.R
Test S/W	EZ-EMC (CCS-3A1RE)			

4.3 MEASUREMENT UNCERTAINTY

PARAMETER	UNCERTAINTY
3M Semi Anechoic Chamber / 30M~200M	+/- 4.0138
3M Semi Anechoic Chamber / 200M~1000M	+/- 3.9483
3M Semi Anechoic Chamber / 1G~8G	+/- 2.5975
3M Semi Anechoic Chamber / 8G~18G	+/- 2.6112
3M Semi Anechoic Chamber / 18G~26G	+/- 2.7389
3M Semi Anechoic Chamber / 26G~40G	+/- 2.9683

***Remark**: This uncertainty represents an expanded uncertainty expressed at approximately the 95% confidence level using a coverage factor of k=2.*

5. FACILITIES AND ACCREDITATIONS

5.1 FACILITIES

All measurement facilities used to collect the measurement data are located at

☐ No.199, Chunghsen Road, Hsintien City, Taipei Hsien, Taiwan, R.O.C.
Tel: 886-2-2217-0894 / Fax: 886-2-2217-1029

☒ No.11, Wugong 6th Rd., Wugu Dist., New Taipei City 24891, Taiwan. (R.O.C.)
Tel: 886-2-2299-9720 / Fax: 886-2-2298-4045

☐ No.81-1, Lane 210, Bade 2nd Rd., Luchu Hsiang, Taoyuan Hsien 338, Taiwan
Tel: 886-3-324-0332 / Fax: 886-3-324-5235

The sites are constructed in conformance with the requirements of ANSI C63.7, ANSI C63.4 and CISPR Publication 22.

5.2 EQUIPMENT

Radiated emissions are measured with one or more of the following types of linearly polarized antennas: tuned dipole, biconical, log periodic, bi-log, and/or ridged waveguide, horn. Spectrum analyzers with pre-selectors and quasi-peak detectors are used to perform radiated measurements.

Conducted emissions are measured with Line Impedance Stabilization Networks and EMI Test Receivers.

Calibrated wideband preamplifiers, coaxial cables, and coaxial attenuators are also used for making measurements.

All receiving equipment conforms to CISPR Publication 16-1, “Radio Interference Measuring Apparatus and Measurement Methods.”

5.3 LABORATORY ACCREDITATIONS AND LISTING

The test facilities used to perform radiated and conducted emissions tests are accredited by American Association for Laboratory Accreditation Program for the specific scope accreditation under Lab Code: 0824-01 to perform Electromagnetic Interference tests according to FCC Part 15 and CISPR 22 requirements. In addition, the test facilities are listed with Industry Canada, Certification and Engineering Bureau, IC 2324G-1 for 3M Semi Anechoic Chamber A, 2324G-2 for 3M Semi Anechoic Chamber B.

5.4 TABLE OF ACCREDITATIONS AND LISTINGS

Country	Agency	Scope of Accreditation	Logo
USA	FCC	3M Semi Anechoic Chamber (FCC MRA: TW1039) to perform FCC Part 15 measurements	FCC MRA: TW1039
Taiwan	TAF	LP0002, RTTE01, FCC Method-47 CFR Part 15 Subpart C, D, E, RSS-210, RSS-310 IDA TS SRD, AS/NZS 4268, AS/NZS 4771, TS 12.1 & 12,2, ETSI EN 300 440-1, ETSI EN 300 440-2, ETSI EN 300 328, ETSI EN 300 220-1, ETSI EN 300 220-2, ETSI EN 301 893, ETSI EN 301 489-1/3/7/17 FCC OET Bulletin 65 + Supplement C, EN 50360, EN 50361, EN 50371, RSS 102, EN 50383, EN 50385, EN 50392, IEC 62209, CNS 14958-1, CNS 14959 FCC Method –47 CFR Part 15 Subpart B IEC / EN 61000-3-2, IEC / EN 61000-3-3, IEC / EN 61000-4-2/3/4/5/6/8/11	Testing Laboratory 1309
Canada	Industry Canada	3M Semi Anechoic Chamber (IC 2324G-1 / IC 2324G-2) to perform	IC 2324G-1 IC 2324G-2

** No part of this report may be used to claim or imply product endorsement by A2LA or any agency of the US Government.*

6. SETUP OF EQUIPMENT UNDER TEST

6.1 SETUP CONFIGURATION OF EUT

See test photographs attached in Appendix I for the actual connections between EUT and support equipment.

6.2 SUPPORT EQUIPMENT

No.	Equipment	Model No.	Serial No.	FCC ID	Trade Name	Data Cable	Power Cord
1	Notebook PC	Flex 3-1570	N/A	FCC DOC	Lenovo	N/A	AC I/P: Unshielded, 1.8m DC O/P: Unshielded, 1.7m with a core

Remark:

1. *All the equipment/cables were placed in the worst-case configuration to maximize the emission during the test.*
2. *Grounding was established in accordance with the manufacturer's requirements and conditions for the intended use.*

7. FCC PART 15 REQUIREMENTS & RSS 210 REQUIREMENTS

7.1 MAXIMUM OUTPUT POWER

LIMIT

None; for reporting purposes only.
Test Configuration

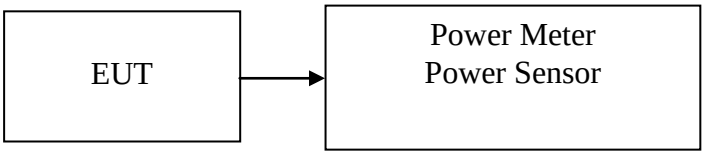

TEST PROCEDURE

The transmitter output is connected to the Power Meter. The Power Meter is set to the Average power detection.

TEST RESULTS

No non-compliance noted.

Test Data

Test mode: IEEE 802.11a mode / 5745 ~ 5825MHz

Channel	Frequency (MHz)	Maximum Conducted Output Power (dBm)	Limit (dBm)
149	5745	19.1	30.00
157	5785	***20.1**	30.00
165	5825	20.1	30.00

Test mode: IEEE 802.11n HT 20 MHz Channel mode / 5745 ~ 5825MHz

Channel	Frequency (MHz)	Maximum Conducted Output Power (dBm)	Limit (dBm)
149	5745	19.10	30.00
157	5785	***20.10**	30.00
165	5825	20.10	30.00

Test mode: IEEE 802.11n HT 40 MHz mode / 5755 ~ 5795MHz

Channel	Frequency (MHz)	Maximum Conducted Output Power (dBm)	Limit (dBm)
151	5755	17.10	30.00
159	5795	***20.20**	30.00

Test mode: IEEE 802.11n HT 80 MHz mode / 5775MHz

Channel	Frequency (MHz)	Maximum Conducted Output Power (dBm)	Limit (dBm)
155	5775	***16.10**	30.00

7.2 RADIATED UNDESIRABLE EMISSION

1. According to §15.209(a) & RSS-210 §A9.3, except as provided elsewhere in this Subpart, the emissions from an intentional radiator shall not exceed the field strength levels specified in the following table:

Frequency (MHz)	Field Strength (µV/m)	Measurement Distance (m)
30-88	100*	3
88-216	150*	3
216-960	200*	3
Above 960	500	3

Remark: *Except as provided in paragraph (g), fundamental emissions from intentional radiators operating under this Section shall not be located in the frequency bands 54-72 MHz, 76-88 MHz, 174-216 MHz or 470-806 MHz. However, operation within these frequency bands is permitted under other sections of this Part, e.g., Sections 15.231 and 15.241.*

2. In the emission table above, the tighter limit applies at the band edges.

Frequency (MHz)	Field Strength (µV/m at 3-meter)	Field Strength (dBµV/m at 3-meter)
30-88	100	40
88-216	150	43.5
216-960	200	46
Above 960	500	54

Test Configuration

9kHz ~ 30MHz

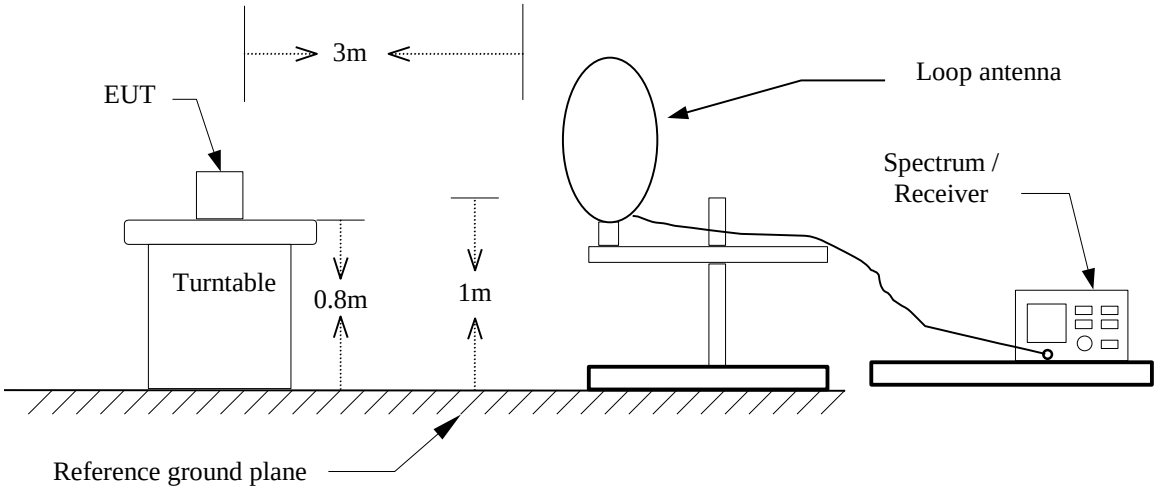

30MHz ~ 1GHz

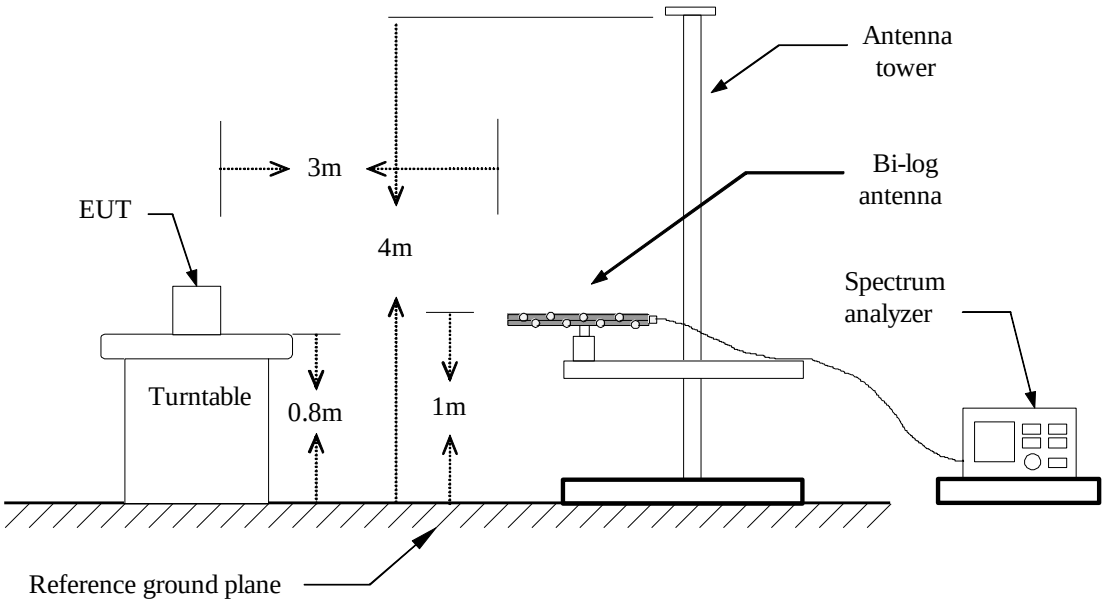

Above 1 GHz

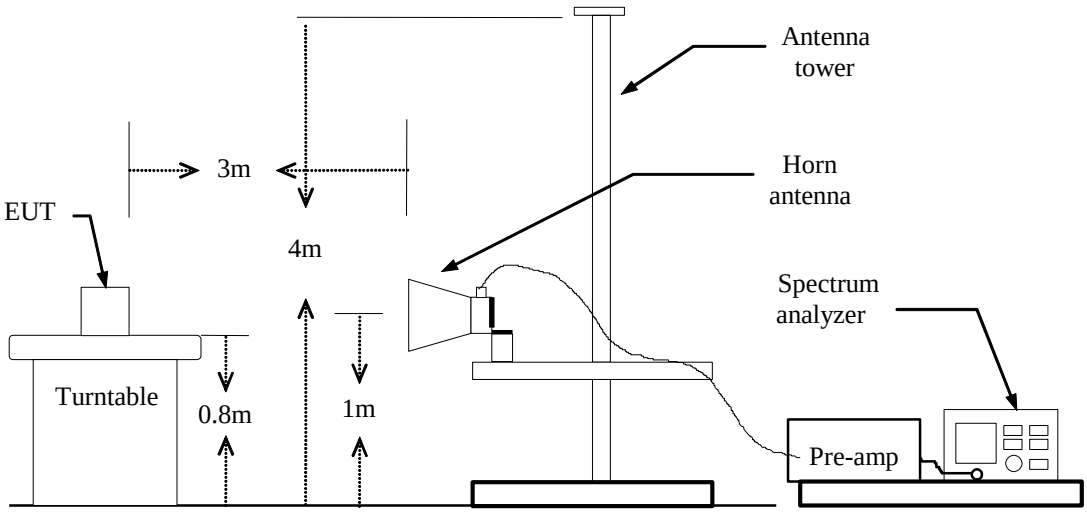
Antenna
tower
3m
Horn
antenna
EUT
4m
Spectrum
analyzer
Turntable
0.8m
1m
Pre-amp

TEST PROCEDURE

1. The EUT is placed on a turntable, which is 0.8m above ground plane.
2. The turntable shall be rotated for 360 degrees to determine the position of maximum emission level.
3. EUT is set 3m away from the receiving antenna, which is varied from 1m to 4m to find out the highest emissions.
4. Maximum procedure was performed on the six highest emissions to ensure EUT compliance.
5. And also, each emission was to be maximized by changing the polarization of receiving antenna both horizontal and vertical.
6. Set the spectrum analyzer in the following setting as:

Below 1GHz:

RBW=100kHz / VBW=300kHz / Sweep=AUTO

Above 1GHz:

(a) PEAK: RBW=VBW=1MHz / Sweep=AUTO
(b) A AVERAGE: RBW=1MHz,
if duty cycle≧98%, VBW=10Hz.
if duty cycle<98% VBW=1/T.
IEEE 802.11b mode: ≧98%, VBW=10Hz
IEEE 802.11g mode: ≧98%, VBW=10Hz
IEEE 802.11n HT 20 MHz mode: ≧98%, VBW=10Hz

IEEE 802.11n HT 40 MHz mode: 96%=VBW 2kHz

7. Repeat above procedures until the measurements for all frequencies are complete.

Below 1 GHz

Operation Mode: Normal Link **Test Date:** January 31, 2015

Temperature: 27℃ **Tested by:** Owen Wu

Humidity: 53% RH **Polarity:** Ver. / Hor.

Frequency (MHz)	Reading (dBuV)	Correction Factor (dB/m)	Result (dBuV/m)	Limit (dBuV/m)	Margin (dB)	Remark	Ant.Pol. (H/V)
30.9700	41.83	-10.58	31.25	40.00	-8.75	peak	V
206.5400	46.75	-18.01	28.74	43.50	-14.76	peak	V
427.7000	49.43	-13.27	36.16	46.00	-9.84	peak	V
534.4000	45.05	-11.26	33.79	46.00	-12.21	peak	V
597.4500	43.04	-10.53	32.51	46.00	-13.49	peak	V
687.6600	38.94	-8.92	30.02	46.00	-15.98	peak	V
32.9100	40.22	-12.00	28.22	40.00	-11.78	peak	H
229.8200	52.03	-18.81	33.22	46.00	-12.78	peak	H
305.4800	48.60	-16.28	32.32	46.00	-13.68	peak	H
436.4300	48.26	-13.03	35.23	46.00	-10.77	peak	H
833.1600	37.15	-6.98	30.17	46.00	-15.83	peak	H
1000.0000	37.77	-4.68	33.09	54.00	-20.91	peak	H

Remark:

1. *Measuring frequencies from 30 MHz to the 1GHz.*
2. *Radiated emissions measured in frequency range from 30 MHz to 1000MHz were made with an instrument using peak/quasi-peak detector mode.*
3. *Quasi-peak test would be performed if the peak result were greater than the quasi-peak limit or as required by the applicant.*
4. *Measurements above show only up to 6 maximum emissions noted, or would be lesser, with " N/A " remark, if no specific emissions from the EUT are recorded (ie: margin>20dB from the applicable limit) and considered that's already beyond the background noise floor.*
5. *Margin (dB) = Remark result (dBuV/m) – Quasi-peak limit (dBuV/m).*

Above 1 GHz

Operation Mode: Tx / IEEE 802.11a mode / 5745MHz **Test Date:** February 1, 2015

Temperature: 27℃ **Tested by:** Owen Wu

Humidity: 53% RH **Polarity:** Ver. / Hor.

Frequency (MHz)	Reading (dBuV)	Correction (dB/m)	Result (dBuV/m)	Limit (dBuV/m)	Margin (dB)	Remark	Ant.Pol. (H/V)
2512.000	49.68	-3.10	46.58	74.00	-27.42	peak	V
N/A							
2575.000	49.18	-2.97	46.21	74.00	-27.79	peak	H
N/A							

Remark:

1. *Measuring frequencies from 1 GHz to the 10th harmonic of highest fundamental frequency.*
2. *Radiated emissions measured in frequency above 1000MHz were made with an instrument using peak/average detector mode.*
3. *Average test would be performed if the peak result were greater than the average limit or as required by the applicant.*
4. *Data of measurement within this frequency range shown " --- " in the table above means the reading of emissions are attenuated more than 20dB below the permissible limits or the field strength is too small to be measured.*
5. *Measurements above show only up to 6 maximum emissions noted, or would be lesser, with " N/A " remark, if no specific emissions from the EUT are recorded (ie: margin>20dB from the applicable limit) and considered that's already beyond the background noise floor.*
6. *Margin (dB) = Remark result (dBuV/m) – Average limit (dBuV/m).*

Operation Mode: Tx / IEEE 802.11a mode / 5785MHz **Test Date:** February 1, 2015
Temperature: 27℃ **Tested by:** Owen Wu
Humidity: 53% RH **Polarity:** Ver. / Hor.

Frequency (MHz)	Reading (dBuV)	Correction (dB/m)	Result (dBuV/m)	Limit (dBuV/m)	Margin (dB)	Remark	Ant.Pol. (H/V)
3219.000	51.36	-1.58	49.78	74.00	-24.22	peak	V
N/A							
2750.000	49.25	-2.62	46.63	74.00	-27.37	peak	H
N/A							

Remark:

1. *Measuring frequencies from 1 GHz to the 10th harmonic of highest fundamental frequency.*
2. *Radiated emissions measured in frequency above 1000MHz were made with an instrument using peak/average detector mode.*
3. *Average test would be performed if the peak result were greater than the average limit or as required by the applicant.*
4. *Data of measurement within this frequency range shown " --- " in the table above means the reading of emissions are attenuated more than 20dB below the permissible limits or the field strength is too small to be measured.*
5. *Measurements above show only up to 6 maximum emissions noted, or would be lesser, with " N/A " remark, if no specific emissions from the EUT are recorded (ie: margin>20dB from the applicable limit) and considered that's already beyond the background noise floor.*
6. *Margin (dB) = Remark result (dBuV/m) – Average limit (dBuV/m).*

Operation Mode: Tx / IEEE 802.11a mode / 5825MHz **Test Date:** February 1, 2015
Temperature: 27℃ **Tested by:** Owen Wu
Humidity: 53% RH **Polarity:** Ver. / Hor.

Frequency (MHz)	Reading (dBuV)	Correction (dB/m)	Result (dBuV/m)	Limit (dBuV/m)	Margin (dB)	Remark	Ant.Pol. (H/V)
2057.000	48.92	-4.94	43.98	74.00	-30.02	peak	V
N/A							
2400.000	48.60	-3.69	44.91	74.00	-29.09	peak	H
N/A							

Remark:

1. *Measuring frequencies from 1 GHz to the 10th harmonic of highest fundamental frequency.*
2. *Radiated emissions measured in frequency above 1000MHz were made with an instrument using peak/average detector mode.*
3. *Average test would be performed if the peak result were greater than the average limit or as required by the applicant.*
4. *Data of measurement within this frequency range shown " --- " in the table above means the reading of emissions are attenuated more than 20dB below the permissible limits or the field strength is too small to be measured.*
5. *Measurements above show only up to 6 maximum emissions noted, or would be lesser, with " N/A " remark, if no specific emissions from the EUT are recorded (ie: margin>20dB from the applicable limit) and considered that's already beyond the background noise floor.*
6. *Margin (dB) = Remark result (dBuV/m) – Average limit (dBuV/m).*

Operation Mode:	Tx / IEEE 802.11n HT 20 MHz Channel mode / 5745MHz	**Test Date:**	February 1, 2015
Temperature:	27°C	**Tested by:**	Owen Wu
Humidity:	53% RH	**Polarity:**	Ver. / Hor.

Frequency (MHz)	Reading (dBuV)	Correction (dB/m)	Result (dBuV/m)	Limit (dBuV/m)	Margin (dB)	Remark	Ant.Pol. (H/V)
2729.000	49.44	-2.66	46.78	74.00	-27.22	peak	V
N/A							
2267.000	49.81	-4.34	45.47	74.00	-28.53	peak	H
N/A							

Remark:

1. *Measuring frequencies from 1 GHz to the 10th harmonic of highest fundamental frequency.*
2. *Radiated emissions measured in frequency above 1000MHz were made with an instrument using peak/average detector mode.*
3. *Average test would be performed if the peak result were greater than the average limit or as required by the applicant.*
4. *Data of measurement within this frequency range shown " --- " in the table above means the reading of emissions are attenuated more than 20dB below the permissible limits or the field strength is too small to be measured.*
5. *Measurements above show only up to 6 maximum emissions noted, or would be lesser, with " N/A " remark, if no specific emissions from the EUT are recorded (ie: margin>20dB from the applicable limit) and considered that's already beyond the background noise floor.*
6. *Margin (dB) = Remark result (dBuV/m) – Average limit (dBuV/m).*

Operation Mode:	Tx / IEEE 802.11n HT 20 MHz Channel mode / 5785MHz	**Test Date:**	February 1, 2015
Temperature:	27℃	**Tested by:**	Owen Wu
Humidity:	53% RH	**Polarity:**	Ver. / Hor.

Frequency (MHz)	Reading (dBuV)	Correction (dB/m)	Result (dBuV/m)	Limit (dBuV/m)	Margin (dB)	Remark	Ant.Pol. (H/V)
1952.000	49.80	-5.13	44.67	74.00	-29.33	peak	V
N/A							
3177.000	50.33	-1.69	48.64	74.00	-25.36	peak	H
N/A							

Remark:

1. *Measuring frequencies from 1 GHz to the 10th harmonic of highest fundamental frequency.*
2. *Radiated emissions measured in frequency above 1000MHz were made with an instrument using peak/average detector mode.*
3. *Average test would be performed if the peak result were greater than the average limit or as required by the applicant.*
4. *Data of measurement within this frequency range shown " --- " in the table above means the reading of emissions are attenuated more than 20dB below the permissible limits or the field strength is too small to be measured.*
5. *Measurements above show only up to 6 maximum emissions noted, or would be lesser, with " N/A " remark, if no specific emissions from the EUT are recorded (ie: margin>20dB from the applicable limit) and considered that's already beyond the background noise floor.*
6. *Margin (dB) = Remark result (dBuV/m) – Average limit (dBuV/m).*

Operation Mode:	Tx / IEEE 802.11n HT 20 MHz Channel mode / 5825MHz	**Test Date:**	February 1, 2015
Temperature:	27℃	**Tested by:**	Owen Wu
Humidity:	53% RH	**Polarity:**	Ver. / Hor.

Frequency (MHz)	Reading (dBuV)	Correction (dB/m)	Result (dBuV/m)	Limit (dBuV/m)	Margin (dB)	Remark	Ant.Pol. (H/V)
2211.000	49.71	-4.41	45.30	74.00	-28.70	peak	V
N/A							
2316.000	50.44	-4.26	46.18	74.00	-27.82	peak	H
N/A							

Remark:

1. *Measuring frequencies from 1 GHz to the 10th harmonic of highest fundamental frequency.*
2. *Radiated emissions measured in frequency above 1000MHz were made with an instrument using peak/average detector mode.*
3. *Average test would be performed if the peak result were greater than the average limit or as required by the applicant.*
4. *Data of measurement within this frequency range shown " --- " in the table above means the reading of emissions are attenuated more than 20dB below the permissible limits or the field strength is too small to be measured.*
5. *Measurements above show only up to 6 maximum emissions noted, or would be lesser, with " N/A " remark, if no specific emissions from the EUT are recorded (ie: margin>20dB from the applicable limit) and considered that's already beyond the background noise floor.*
6. *Margin (dB) = Remark result (dBuV/m) – Average limit (dBuV/m).*

Operation Mode:	Tx / IEEE 802.11n HT 40 MHz mode / 5755 MHz	**Test Date:**	February 1, 2015
Temperature:	27℃	**Tested by:**	Owen Wu
Humidity:	53% RH	**Polarity:**	Ver. / Hor.

Frequency (MHz)	Reading (dBuV)	Correction (dB/m)	Result (dBuV/m)	Limit (dBuV/m)	Margin (dB)	Remark	Ant.Pol. (H/V)
3051.000	50.54	-1.99	48.55	74.00	-25.45	peak	V
N/A							
1952.000	51.45	-5.13	46.32	74.00	-27.68	peak	H
N/A							

Remark:

1. *Measuring frequencies from 1 GHz to the 10th harmonic of highest fundamental frequency.*
2. *Radiated emissions measured in frequency above 1000MHz were made with an instrument using peak/average detector mode.*
3. *Average test would be performed if the peak result were greater than the average limit or as required by the applicant.*
4. *Data of measurement within this frequency range shown " --- " in the table above means the reading of emissions are attenuated more than 20dB below the permissible limits or the field strength is too small to be measured.*
5. *Measurements above show only up to 6 maximum emissions noted, or would be lesser, with " N/A " remark, if no specific emissions from the EUT are recorded (ie: margin>20dB from the applicable limit) and considered that's already beyond the background noise floor.*
6. *Margin (dB) = Remark result (dBuV/m) – Average limit (dBuV/m).*

Operation Mode:	Tx / IEEE 802.11n HT 40 MHz mode / 5795MHz	**Test Date:**	February 1, 2015
Temperature:	27°C	**Tested by:**	Owen Wu
Humidity:	53% RH	**Polarity:**	Ver. / Hor.

Frequency (MHz)	Reading (dBuV)	Correction (dB/m)	Result (dBuV/m)	Limit (dBuV/m)	Margin (dB)	Remark	Ant.Pol. (H/V)
2092.000	48.66	-4.97	43.69	74.00	-30.31	peak	V
N/A							
2176.000	49.22	-4.56	44.66	74.00	-29.34	peak	H
N/A							

Remark:

1. *Measuring frequencies from 1 GHz to the 10th harmonic of highest fundamental frequency.*
2. *Radiated emissions measured in frequency above 1000MHz were made with an instrument using peak/average detector mode.*
3. *Average test would be performed if the peak result were greater than the average limit or as required by the applicant.*
4. *Data of measurement within this frequency range shown " --- " in the table above means the reading of emissions are attenuated more than 20dB below the permissible limits or the field strength is too small to be measured.*
5. *Measurements above show only up to 6 maximum emissions noted, or would be lesser, with " N/A " remark, if no specific emissions from the EUT are recorded (ie: margin>20dB from the applicable limit) and considered that's already beyond the background noise floor.*
6. *Margin (dB) = Remark result (dBuV/m) – Average limit (dBuV/m).*

Operation Mode:	Tx / IEEE 802.11n HT 80 MHz mode / 5775MHz	**Test Date:**	February 1, 2015
Temperature:	27°C	**Tested by:**	Owen Wu
Humidity:	53% RH	**Polarity:**	Ver. / Hor.

Frequency (MHz)	Reading (dBuV)	Correction (dB/m)	Result (dBuV/m)	Limit (dBuV/m)	Margin (dB)	Remark	Ant.Pol. (H/V)
4913.000	50.45	3.89	54.34	74.00	-19.66	peak	V
N/A							
4192.000	49.95	1.96	51.91	74.00	-22.09	peak	H
N/A							

Remark:

1. *Measuring frequencies from 1 GHz to the 10th harmonic of highest fundamental frequency.*
2. *Radiated emissions measured in frequency above 1000MHz were made with an instrument using peak/average detector mode.*
3. *Average test would be performed if the peak result were greater than the average limit or as required by the applicant.*
4. *Data of measurement within this frequency range shown " --- " in the table above means the reading of emissions are attenuated more than 20dB below the permissible limits or the field strength is too small to be measured.*
5. *Measurements above show only up to 6 maximum emissions noted, or would be lesser, with " N/A " remark, if no specific emissions from the EUT are recorded (ie: margin>20dB from the applicable limit) and considered that's already beyond the background noise floor.*
6. *Margin (dB) = Remark result (dBuV/m) – Average limit (dBuV/m).*