SPORTON International Inc.
No. 52, Hwa Ya 1st Rd., Hwa Ya Technology Park, Kwei-Shan Hsiang, Tao Yuan Hsien, Taiwan, R.O.C.
Ph: 886-3-327-3456 / FAX: 886-3-327-0973 / www.sporton.com.tw

FCC RADIO TEST REPORT

Applicant's company	**Broadcom Corporation**
Applicant Address	190 Mathilda Place Sunnyvale CA 94086 U.S.A.
FCC ID	**QDS-BRCM1082**
Manufacturer's company	**Broadcom Corporation**
Manufacturer Address	190 Mathilda Place Sunnyvale CA 94086 U.S.A.

Product Name	802.11abgn/11ac WLAN + Bluetooth PCI-E Mini Card
Brand Name	Broadcom
Model Name	BCM94360HMB
Test Rule	47 CFR FCC Part 15 Subpart C § 15.247
Test Freq. Range	2402 ~ 2480MHz
Received Date	Mar. 12, 2014
Final Test Date	Sep. 02, 2014
Submission Type	Class II Change

Statement

Test result included is only for the Bluetooth LE of the product.

The test result in this report refers exclusively to the presented test model / sample.

Without written approval of SPORTON International Inc., the test report shall not be reproduced except in full.

The measurements and test results shown in this test report were made in accordance with the procedures and found in compliance with the limit given in **ANSI C63.10-2009**, **47 CFR FCC Part 15 Subpart C** and **KDB 558074 D01 v03r02**.

The test equipment used to perform the test is calibrated and traceable to NML/ROC.

Testing Laboratory
1190

Table of Contents

1. CERTIFICATE OF COMPLIANCE 1
2. SUMMARY OF THE TEST RESULT 2
3. GENERAL INFORMATION 3
3.1. Product Details 3
3.2. Accessories 3
3.3. Table for Filed Antenna 3
3.4. Table for Carrier Frequencies 4
3.5. Table for Test Modes 5
3.6. Table for Testing Locations 5
3.7. Table for Class II Change 6
3.8. Table for Supporting Units 6
3.9. Table for Parameters of Test Software Setting 6
3.10. Duty Cycle 7
3.11. Test Configurations 7
4. TEST RESULT 9
4.1. Maximum Conducted Output Power Measurement 9
4.2. Radiated Emissions Measurement 11
4.3. Emissions Measurement 21
4.4. Antenna Requirements 27
5. LIST OF MEASURING EQUIPMENTS 28
6. MEASUREMENT UNCERTAINTY 29
APPENDIX A. TEST PHOTOS ..... A1 ~ A6
APPENDIX B. MAXIMUM PERMISSIBLE EXPOSURE ..... B1 ~ B4
APPENDIX C. RADIATED EMISSION CO-LOCATION REPORT ..... C1 ~ C5

History of This Test Report

REPORT NO.	VERSION	DESCRIPTION	ISSUED DATE
FR431243-03AD	Rev. 01	Initial issue of report	Sep. 18, 2014

Certificate No.: CB10309051

1. CERTIFICATE OF COMPLIANCE

Product Name	:	802.11abgn/11ac WLAN + Bluetooth PCI-E Mini Card
Brand Name	:	Broadcom
Model No.	:	BCM94360HMB
Applicant	:	Broadcom Corporation
Test Rule Part(s)	:	47 CFR FCC Part 15 Subpart C § 15.247

Sporton International as requested by the applicant to evaluate the EMC performance of the product sample received on Mar. 12, 2014 would like to declare that the tested sample has been evaluated and found to be in compliance with the tested rule parts. The data recorded as well as the test configuration specified is true and accurate for showing the sample's EMC nature.

Sam Chen

Sam Chen

SPORTON INTERNATIONAL INC.

2. SUMMARY OF THE TEST RESULT

Applied Standard: 47 CFR FCC Part 15 Subpart C				
Part	Rule Section	Description of Test	Result	Under Limit
4.1	15.247(b)(3)	Maximum Conducted Output Power	Complies	31.43 dB
4.2	15.247(d)	Radiated Emissions	Complies	3.81 dB
4.3	15.247(d)	Band Edge Emissions	Complies	0.88 dB
4.4	15.203	Antenna Requirements	Complies	-

3. GENERAL INFORMATION

3.1. Product Details

Items	Description
Power Type	From host system
Modulation	DSSS
Data Rate (Mbps)	GFSK: 1
Frequency Range	2402 ~ 2480MHz
Channel Number	40 (37 hopping + 3 advertising channel)
Maximum Conducted Output Power	-1.43 dBm
Carrier Frequencies	Please refer to section 3.4
Antenna	Please refer to section 3.3

3.2. Accessories

N/A

3.3. Table for Filed Antenna

Ant.	Brand	Model Name	Antenna Type	Connector	Gain (dBi)				
					2.4G	5G B1	5G B2	5G B3	5G B4
1	INPAQ	DAM-I6-H-C3-800-14-17	Dipole	MMCX PLUG	3.59	2.35	3.59	2.66	2.79

Note: The EUT has one antenna.

<For 2.4GHz Band>

For IEEE 802.11b/g/n mode (3TX/3RX)

Chain 1, Chain 2 and Chain 3 can be used as transmitting/receiving antenna.

Chain 1, Chain 2 and Chain 3 could transmit/receive simultaneously.

<For 5GHz Band>

For IEEE 802.11a/n/ac mode (3TX/3RX)

Chain 1, Chain 2 and Chain 3 can be used as transmitting/receiving antenna.

Chain 1, Chain 2 and Chain 3 could transmit/receive simultaneously.

For Bluetooth mode (1TX/1RX)

Only Chain 2 can be used as transmitting/receiving antenna.

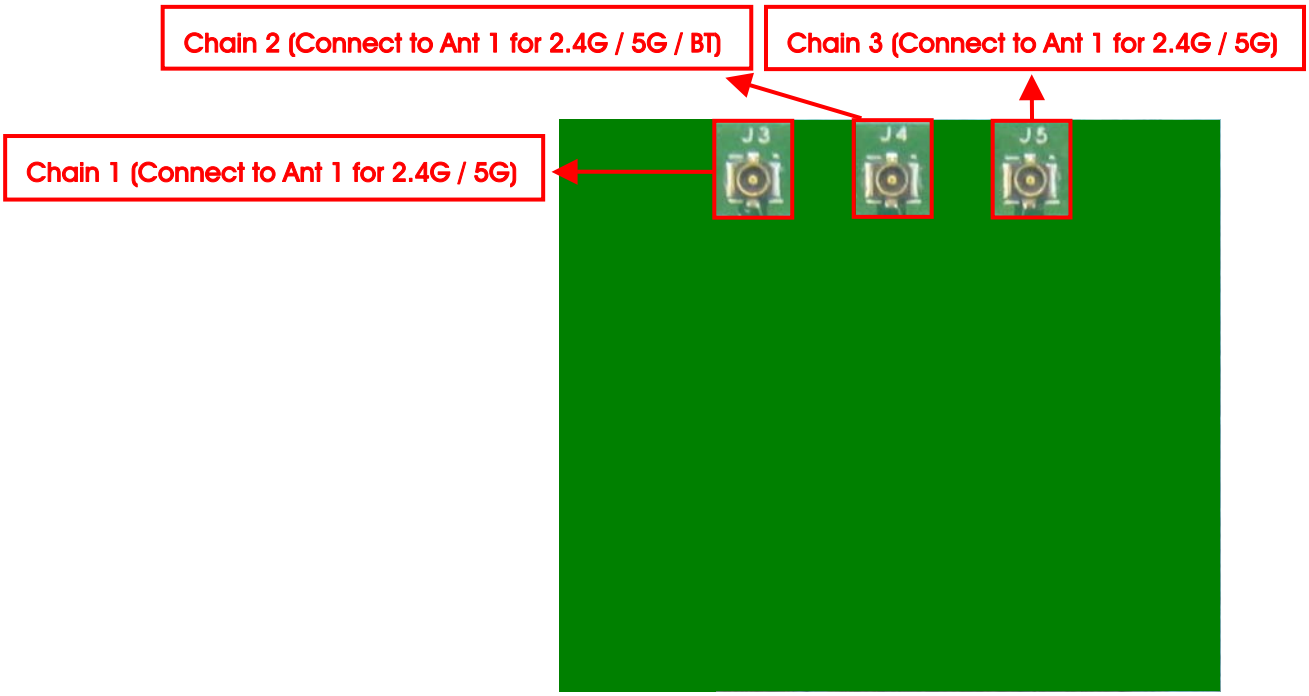

3.4. Table for Carrier Frequencies

Frequency Band	Channel No.	Frequency	Channel No.	Frequency
2400~2483.5MHz	0	2402 MHz	20	2442 MHz
	1	2404 MHz	:	:
	2	2406 MHz	37	2476 MHz
	:	:	38	2478 MHz
	18	2438 MHz	39	2480 MHz
	19	2440 MHz	-	-

3.5. Table for Test Modes

Preliminary tests were performed in different data rate to find the worst radiated emission. The data rate shown in the table below is the worst-case rate with respect to the specific test item. Investigation has been done on all the possible configurations for searching the worst cases. The following table is a list of the test modes shown in this test report.

Test Items	Mode	Data Rate	Channel	Chain
Maximum Conducted Output Power Power Spectral Density	GFSK	1 Mbps	0/20/39	2
Radiated Emissions 9kHz~1GHz	Normal Link	-	-	-
Radiated Emissions 1GHz~10th Harmonic	GFSK	1 Mbps	0/20/39	2
Band Edge Emissions	GFSK	1 Mbps	0/20/39	2

The following test modes were performed for all tests:

For Radiated Emission Below 1GHz test:

Mode 1. 2.4GHz WLAN function + Bluetooth function

Mode 2. 5GHz WLAN function + Bluetooth function

Mode 2 is the worst case, so it was selected to record in this test report.

For Radiated Emission Above 1GHz test:

Mode 1. CTX-EUT

For Co-location test:

Mode 1. 2.4GHz WLAN function + Bluetooth function

Mode 2. 5GHz WLAN function + Bluetooth function

For Co-location MPE and Radiated Emission Co-location Test:

The EUT could be applied 2.4GHz / 5GHz with WLAN function and Bluetooth function; therefore Co-location Maximum Permissible Exposure (please refer to Appendix B) and Radiated Emission Co-location (please refer to Appendix C) tests are added for simultaneously transmit between 2.4GHz / 5GHz WLAN function and Bluetooth function.

3.6. Table for Testing Locations

Test Site Location				
Address:	No.8, Lane 724, Bo-ai St., Jhubei City, Hsinchu County 302, Taiwan, R.O.C.			
TEL:	886-3-656-9065			
FAX:	886-3-656-9085			
Test Site No.	Site Category	Location	FCC Reg. No.	IC File No.
03CH01-CB	SAC	Hsin Chu	262045	IC 4086D
TH01-CB	OVEN Room	Hsin Chu	-	-

Open Area Test Site (OATS); Semi Anechoic Chamber (SAC).

3.7. Table for Class II Change

This product is an extension of original one reported under Sporton project number: FR431243AD
Below is the table for the change of the product with respect to the original one.

Modifications	Performance Checking
Adding a dipole antenna	1. Radiated Emissions (1GHz~10th Harmonic) 2. Band Edge Emissions 3. Co-location Maximum Permissible Exposure 4. Radiated Emission Co-location

3.8. Table for Supporting Units

For Test Site No: 03CH01-CB

Radiated Emission 30MHz~1GHz test

Support Unit	Brand	Model	FCC ID
Notebook	DELL	E4300	RSE-TG233
Notebook	DELL	M1340	E2K4965AGNM
Mouse	Logitech	M-B0001	HC238HR00XY
Earphone	E-BOOKI	E-EPC040	N/A
Fixture	Broadcom	BCM9MC2EC	N/A
RF module	Broadcom	BCM94360HMB	QDS-BRCM1082

Radiated Emission above 1GHz test

Support Unit	Brand	Model	FCC ID
Notebook	DELL	E4300	RSE-TG233
Fixture	Broadcom	BCM9MC2EC	N/A

For Test Site No: TH01-CB

Support Unit	Brand	Model	FCC ID
NB	DELL	E6430	DoC
Fixture	Broadcom	BCM9MC2EC	N/A

3.9. Table for Parameters of Test Software Setting

During testing, Channel and Power Controlling Software provided by the customer was used to control the operating channel as well as the output power level. The RF output power selection is for the setting of RF output power expected by the customer and is going to be fixed on the firmware of the final end product.

Power Parameters:

Test Software Version	Broadcom BlueTool v1.8.4.8		
Frequency	2402 MHz	2442 MHz	2480 MHz
Power Parameters	Default	Default	Default

3.10. Duty Cycle

Mode	TX-on (ms)	TX-on+TX-off (ms)	TX-on/(TX-on+TX-off)x100= Duty cycle (%)	Duty Factor (dB)
GFSK	0.095	0.57	16.67%	7.78

3.11. Test Configurations

3.11.1. Radiation Emissions Test Configuration

Test Configuration: 30MHz～1GHz

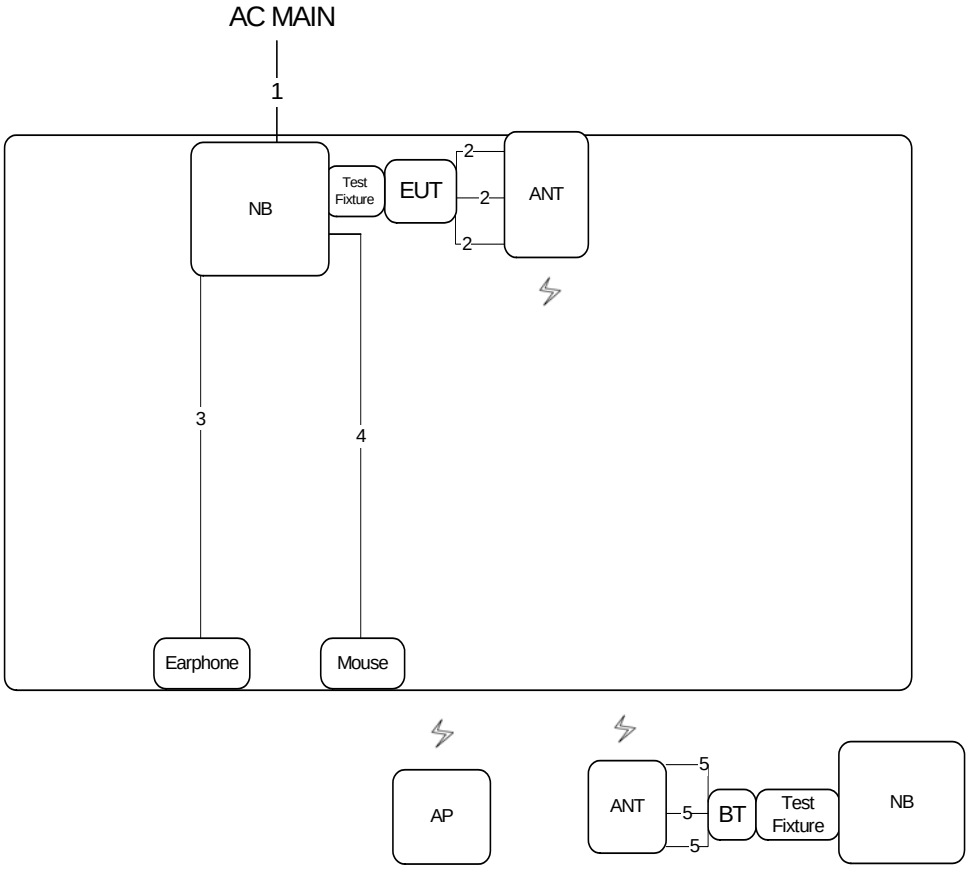

Item	Connection	Shielded	Length(m)
1	AC power cable	No	2.6m
2	ANT cable *3	Yes	0.2m
3	Audio cable	No	1.1m
4	USB cable	Yes	1.8m
5	ANT cable*3	Yes	0.2m

Test Configuration: above 1GHz

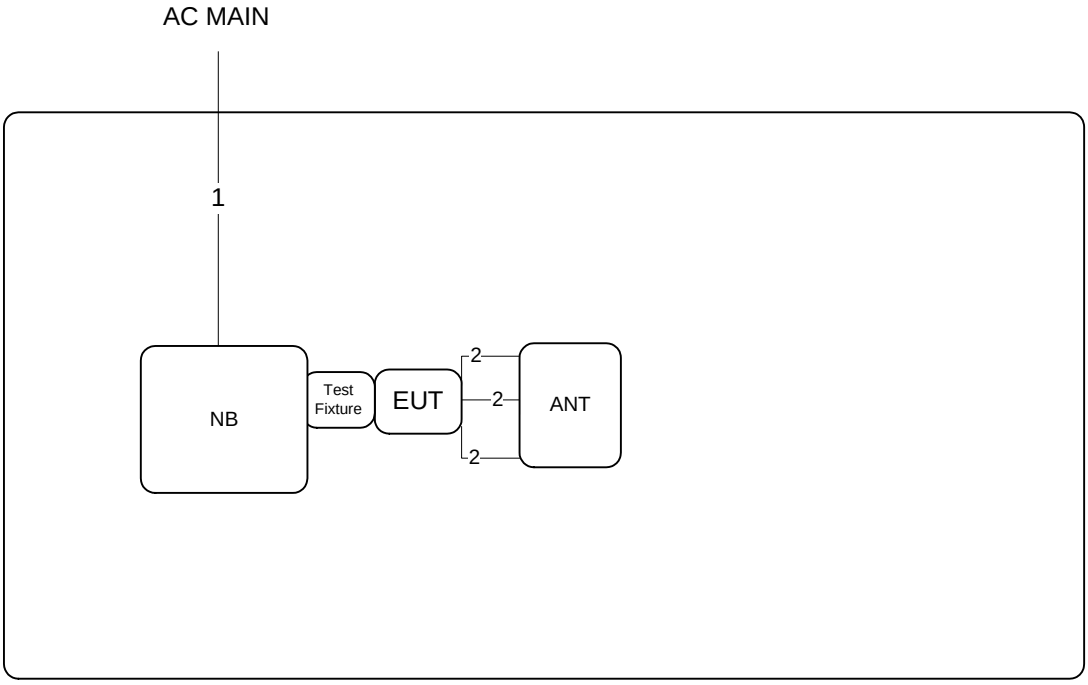

Item	Connection	Shielded	Length(m)
1	AC power cable	No	1.8m
2	ANT cable *3	Yes	0.2m

4. TEST RESULT

4.1. Maximum Conducted Output Power Measurement

4.1.1. Limit

For systems using digital modulation in the 2400-2483.5MHz, the limit for peak output power is 30dBm. The limited has to be reduced by the amount in dB that the gain of the antenna exceed 6dBi. In case of point-to-point operation, the limit has to be reduced by 1dB for every 3dB that the directional gain of the antenna exceeds 6dBi.

4.1.2. Measuring Instruments and Setting

Please refer to section 5 of equipments list in this report. The following table is the setting of the power meter.

Power Meter Parameter	Setting
Bandwidth	50MHz bandwidth is greater than the EUT emission bandwidth
Detector	Average

4.1.3. Test Procedures

1. Test procedures refer KDB 558074 D01 v03r02 section 9.2.3.2.
2. This procedure provides an alternative for determining the RMS output power using a broadband RF average power meter with a thermocouple detector.

4.1.4. Test Setup Layout

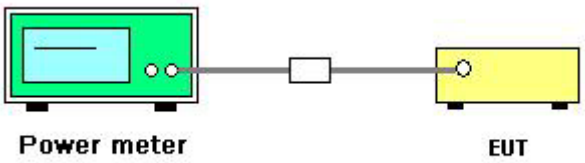

4.1.5. Test Deviation

There is no deviation with the original standard.

4.1.6. EUT Operation during Test

The EUT was programmed to be in continuously transmitting mode.

4.1.7. Test Result of Maximum Conducted Output Power

Temperature	20°C	Humidity	52%
Test Engineer	Jim Huang	Configurations	GFSK
Test Date	May 05, 2014		

Channel	Frequency	Conducted Power (dBm)	Max. Limit (dBm)	Result
0	2402 MHz	-1.55	30.00	Complies
20	2442 MHz	-1.50	30.00	Complies
39	2480 MHz	-1.43	30.00	Complies

4.2. Radiated Emissions Measurement

4.2.1. Limit

20dBc in any 100 kHz bandwidth outside the operating frequency band. In case the emission fall within the restricted band specified on 15.205(a), then the 15.209(a) limit in the table below has to be followed.

Frequencies (MHz)	Field Strength (micorvolts/meter)	Measurement Distance (meters)
0.009~0.490	2400/F(kHz)	300
0.490~1.705	24000/F(kHz)	30
1.705~30.0	30	30
30~88	100	3
88~216	150	3
216~960	200	3
Above 960	500	3

4.2.2. Measuring Instruments and Setting

Please refer to section 5 of equipments list in this report. The following table is the setting of spectrum analyzer and receiver.

Spectrum Parameter	Setting
Attenuation	Auto
Start Frequency	1000 MHz
Stop Frequency	10th carrier harmonic
RBW / VBW (Emission in restricted band)	1MHz / 3MHz for Peak, 1MHz / 1/T for Average
RBW / VBW (Emission in non-restricted band)	100kHz / 300kHz for peak

Receiver Parameter	Setting
Attenuation	Auto
Start ~ Stop Frequency	9kHz~150kHz / RBW 200Hz for QP
Start ~ Stop Frequency	150kHz~30MHz / RBW 9kHz for QP
Start ~ Stop Frequency	30MHz~1000MHz / RBW 120kHz for QP

4.2.3. Test Procedures

1. Configure the EUT according to ANSI C63.10. The EUT was placed on the top of the turntable 0.8 meter above ground. The phase center of the receiving antenna mounted on the top of a height-variable antenna tower was placed 3 meters far away from the turntable.
2. Power on the EUT and all the supporting units. The turntable was rotated by 360 degrees to determine the position of the highest radiation.
3. The height of the broadband receiving antenna was varied between one meter and four meters above ground to find the maximum emissions field strength of both horizontal and vertical polarization.
4. For each suspected emissions, the antenna tower was scan (from 1 M to 4 M) and then the turntable was rotated (from 0 degree to 360 degrees) to find the maximum reading.
5. Set the test-receiver system to Peak or CISPR quasi-peak Detect Function with specified bandwidth under Maximum Hold Mode.
6. For emissions above 1GHz, use 1MHz VBW and 3MHz RBW for peak reading. Then 1MHz RBW and 1/T VBW for average reading in spectrum analyzer.
7. If the emissions level of the EUT in peak mode was 3 dB lower than the average limit specified, then testing will be stopped and peak values of EUT will be reported, otherwise, the emissions which do not have 3 dB margin will be repeated one by one using the quasi-peak method for below 1GHz.
8. For testing above 1GHz, the emissions level of the EUT in peak mode was lower than average limit (that means the emissions level in peak mode also complies with the limit in average mode), then testing will be stopped and peak values of EUT will be reported, otherwise, the emissions will be measured in average mode again and reported.
9. In case the emission is lower than 30MHz, loop antenna has to be used for measurement and the recorded data should be QP measured by receiver. High – Low scan is not required in this case.

4.2.4. Test Setup Layout

For Radiated Emissions: 9kHz ~30MHz

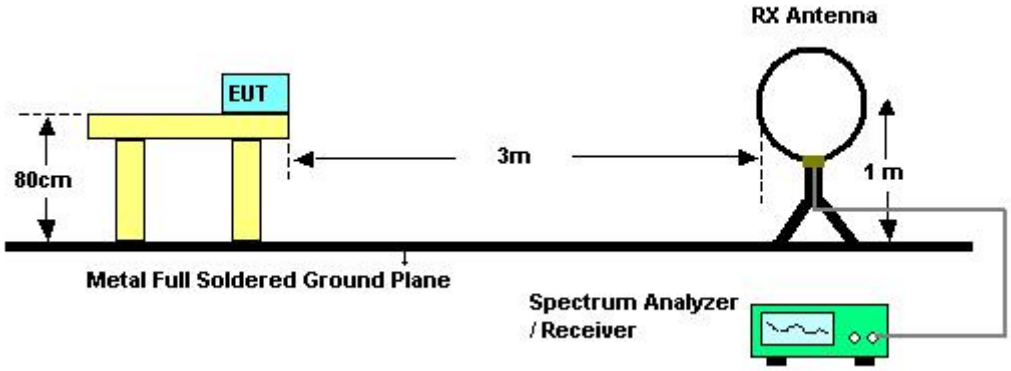

For Radiated Emissions: 30MHz~1GHz

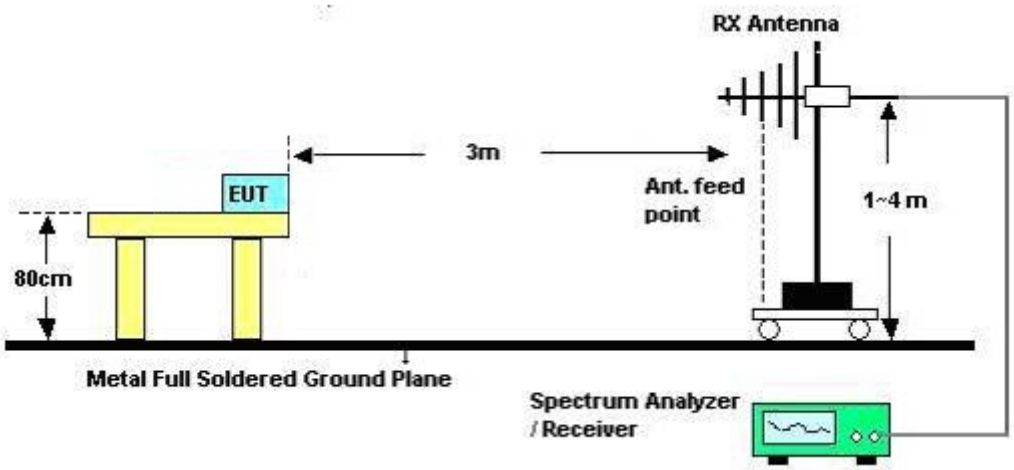

For Radiated Emissions: Above 1GHz

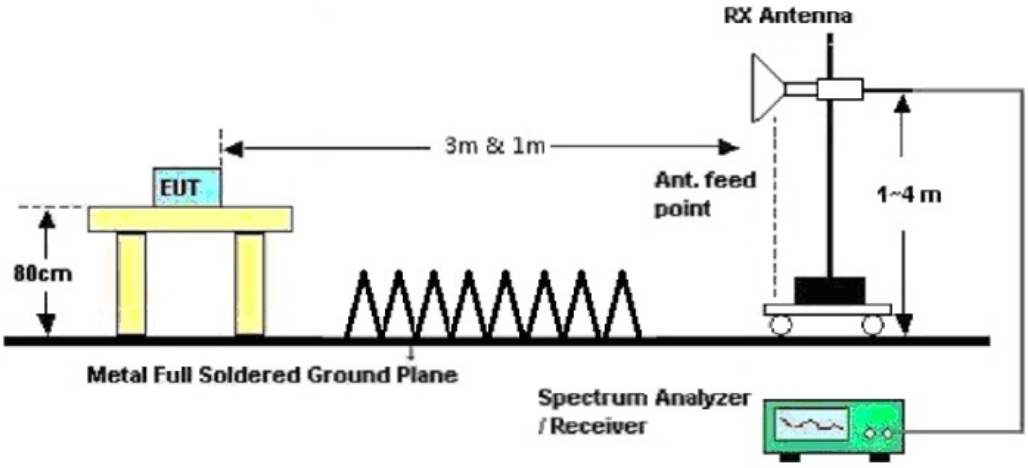

4.2.5. Test Deviation

There is no deviation with the original standard.

4.2.6. EUT Operation during Test

The EUT was programmed to be in continuously transmitting mode.

4.2.7. Results of Radiated Emissions (9kHz~30MHz)

Temperature	24°C	Humidity	51%
Test Engineer	Jim Huang	Configurations	Normal Link
Test Date	Sep. 02, 2014		

Freq. (MHz)	Level (dBuV)	Over Limit (dB)	Limit Line (dBuV)	Remark
-	-	-	-	See Note

Note:

The amplitude of spurious emissions that are attenuated by more than 20 dB below the permissible value has no need to be reported.

Distance extrapolation factor = 40 log (specific distance / test distance) (dB);

Limit line = specific limits (dBuV) + distance extrapolation factor.

4.2.8. Results of Radiated Emissions (30MHz~1GHz)

Temperature	24°C	Humidity	51%
Test Engineer	Jim Huang	Configurations	Normal Link

Horizontal

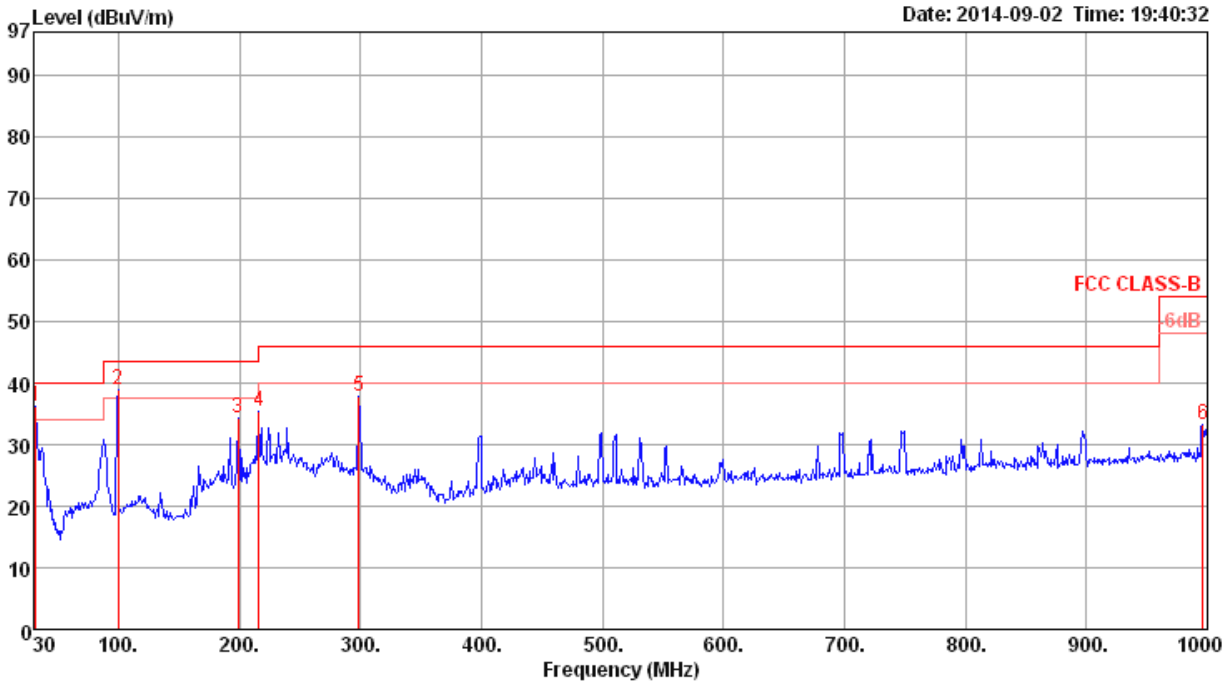

	Freq	Level	Limit Line	Over Limit	Read Level	Cable Loss	Antenna Factor	Preamp Factor	Remark	A/Pos	T/Pos	Pol/Phase
	MHz	dBuV/m	dBuV/m	dB	dBuV	dB	dB/m	dB		cm	deg	
1	31.94	36.19	40.00	-3.81	45.65	0.65	17.69	27.80	Peak	100	0	HORIZONTAL
2	99.84	38.83	43.50	-4.67	54.27	1.17	10.99	27.60	Peak	100	0	HORIZONTAL
3	198.78	34.33	43.50	-9.17	50.53	1.66	9.25	27.11	Peak	100	0	HORIZONTAL
4	216.24	35.28	46.00	-10.72	50.38	1.70	10.27	27.07	Peak	100	0	HORIZONTAL
5	298.69	37.84	46.00	-8.16	49.36	2.03	13.35	26.90	Peak	100	0	HORIZONTAL
6	996.12	33.14	54.00	-20.86	35.21	3.69	21.26	27.02	Peak	100	0	HORIZONTAL

Vertical

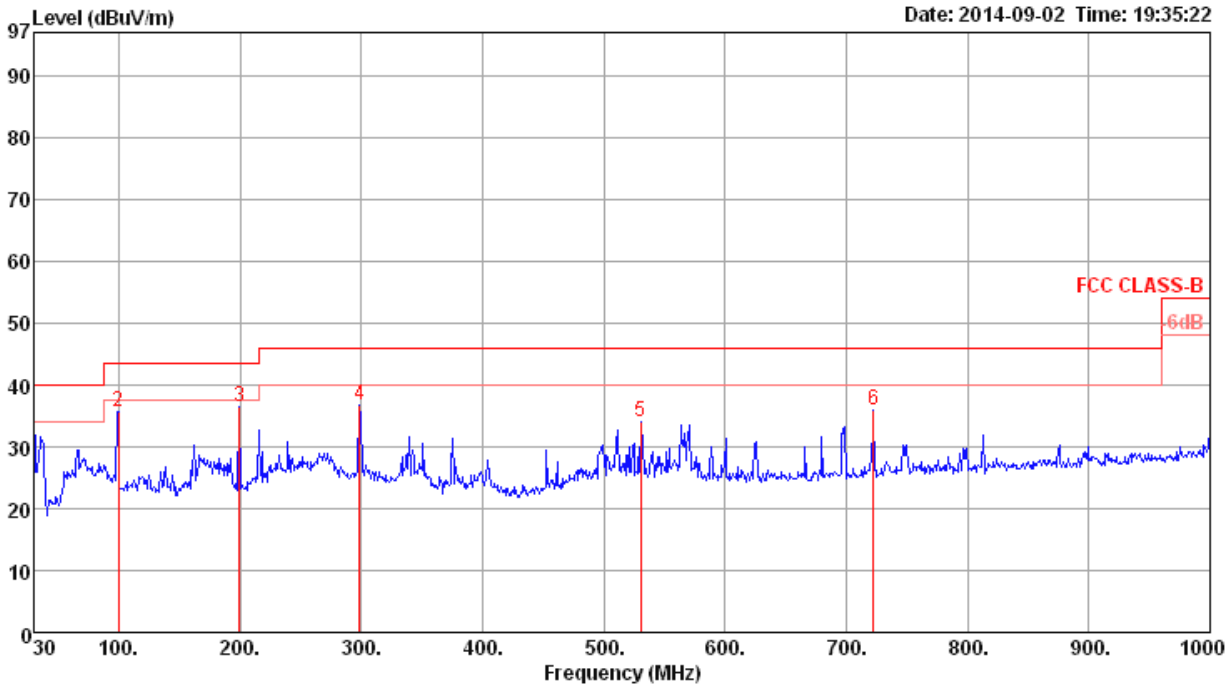

	Freq	Level	Limit Line	Over Limit	Read Level	Cable Loss	Antenna Factor	Preamp Factor	Remark	A/Pos	T/Pos	Pol/Phase
	MHz	dBuV/m	dBuV/m	dB	dBuV	dB	dB/m	dB		cm	deg	
1	30.00	33.85	40.00	-6.15	42.28	0.61	18.76	27.80	Peak	400	0	VERTICAL
2	99.84	35.70	43.50	-7.80	51.14	1.17	10.99	27.60	Peak	400	0	VERTICAL
3	199.75	36.54	43.50	-6.96	52.93	1.66	9.05	27.10	Peak	400	0	VERTICAL
4	298.69	36.84	46.00	-9.16	48.36	2.03	13.35	26.90	Peak	400	0	VERTICAL
5	530.52	33.98	46.00	-12.02	41.37	2.74	17.97	28.10	Peak	400	0	VERTICAL
6	722.58	36.05	46.00	-9.95	41.57	3.15	19.24	27.91	Peak	400	0	VERTICAL

Note:

The amplitude of spurious emissions that are attenuated by more than 20dB below the permissible value has no need to be reported.

Emission level (dBuV/m) = 20 log Emission level (uV/m).

Corrected Reading: Antenna Factor + Cable Loss + Read Level - Preamp Factor = Level.

4.2.9. Results for Radiated Emissions (1GHz~10th Harmonic)

Temperature	24°C	Humidity	51%
Test Engineer	Satoshi Yang	Configurations	Channel 0
Test Date	Sep. 01, 2014		

Horizontal

	Freq	Level	Limit Line	Over Limit	Read Level	Cable Loss	Antenna Factor	Preamp Factor	Remark	T/Pos	A/Pos	Pol/Phase
	MHz	dBuV/m	dBuV/m	dB	dBuV	dB	dB/m	dB		deg	cm	
1	4803.20	52.71	74.00	-21.29	50.69	4.20	32.52	34.70	Peak	124	100	HORIZONTAL
2	4804.62	37.62	54.00	-16.38	35.60	4.20	32.52	34.70	Average	124	100	HORIZONTAL
3	7205.20	58.04	74.00	-15.96	50.68	5.32	36.95	34.91	Peak	124	100	HORIZONTAL
4	7206.00	43.00	54.00	-11.00	35.64	5.32	36.95	34.91	Average	124	100	HORIZONTAL

Vertical

	Freq	Level	Limit Line	Over Limit	Read Level	Cable Loss	Antenna Factor	Preamp Factor	Remark	T/Pos	A/Pos	Pol/Phase
	MHz	dBuV/m	dBuV/m	dB	dBuV	dB	dB/m	dB		deg	cm	
1	4804.02	49.90	74.00	-24.10	47.88	4.20	32.52	34.70	Peak	146	100	VERTICAL
2	4804.02	39.02	54.00	-14.98	37.00	4.20	32.52	34.70	Average	146	100	VERTICAL
3	7205.00	56.80	74.00	-17.20	49.44	5.32	36.95	34.91	Peak	146	100	VERTICAL
4	7205.00	43.00	54.00	-11.00	35.64	5.32	36.95	34.91	Average	146	100	VERTICAL

Temperature	24°C	Humidity	51%
Test Engineer	Satoshi Yang	Configurations	Channel 20
Test Date	Sep. 01, 2014		

Horizontal

	Freq	Level	Limit Line	Over Limit	Read Level	Cable Loss	Antenna Factor	Preamp Factor	Remark	T/Pos	A/Pos	Pol/Phase
	MHz	dBuV/m	dBuV/m	dB	dBuV	dB	dB/m	dB		deg	cm	
1	4883.34	50.86	74.00	-23.14	48.65	4.22	32.66	34.67	Peak	120	100	HORIZONTAL
2	4883.34	37.52	54.00	-16.48	35.31	4.22	32.66	34.67	Average	120	100	HORIZONTAL
3	7325.84	55.14	74.00	-18.86	47.64	5.35	37.09	34.94	Peak	288	100	HORIZONTAL
4	7325.84	43.25	54.00	-10.75	35.75	5.35	37.09	34.94	Average	288	100	HORIZONTAL

Vertical

	Freq	Level	Limit Line	Over Limit	Read Level	Cable Loss	Antenna Factor	Preamp Factor	Remark	T/Pos	A/Pos	Pol/Phase
	MHz	dBuV/m	dBuV/m	dB	dBuV	dB	dB/m	dB		deg	cm	
1	4859.00	38.16	54.00	-15.84	36.01	4.21	32.62	34.68	Average	327	100	VERTICAL
2	4864.29	52.30	74.00	-21.70	50.14	4.21	32.62	34.67	Peak	327	100	VERTICAL
3	7304.69	56.66	74.00	-17.34	49.18	5.34	37.07	34.93	Peak	288	100	VERTICAL
4	7335.14	46.66	54.00	-7.34	39.14	5.35	37.11	34.94	Average	288	100	VERTICAL

Temperature	24°C	Humidity	51%
Test Engineer	Satoshi Yang	Configurations	Channel 39
Test Date	Sep. 01, 2014		

Horizontal

	Freq	Level	Limit Line	Over Limit	Read Level	Cable Loss	Antenna Factor	Preamp Factor	Remark	T/Pos	A/Pos	Pol/Phase
	MHz	dBuV/m	dBuV/m	dB	dBuV	dB	dB/m	dB		deg	cm	
1	4937.81	52.63	74.00	-21.37	50.25	4.23	32.80	34.65	Peak	219	100	HORIZONTAL
2	4976.67	39.88	54.00	-14.12	37.40	4.24	32.87	34.63	Average	219	100	HORIZONTAL
3	7429.26	44.41	54.00	-9.59	36.79	5.37	37.22	34.97	Average	210	100	HORIZONTAL
4	7442.64	56.80	74.00	-17.20	49.17	5.37	37.24	34.98	Peak	210	100	HORIZONTAL

Vertical

	Freq	Level	Limit Line	Over Limit	Read Level	Cable Loss	Antenna Factor	Preamp Factor	Remark	T/Pos	A/Pos	Pol/Phase
	MHz	dBuV/m	dBuV/m	dB	dBuV	dB	dB/m	dB		deg	cm	
1	4945.34	52.40	74.00	-21.60	50.01	4.23	32.80	34.64	Peak	340	100	VERTICAL
2	4982.84	39.77	54.00	-14.23	37.29	4.24	32.87	34.63	Average	340	100	VERTICAL
3	7432.79	44.32	54.00	-9.68	36.70	5.37	37.22	34.97	Average	301	100	VERTICAL
4	7438.80	57.74	74.00	-16.26	50.11	5.37	37.24	34.98	Peak	301	100	VERTICAL

Note:

The amplitude of spurious emissions that are attenuated by more than 20dB below the permissible value has no need to be reported.

Emission level (dBuV/m) = 20 log Emission level (uV/m).

Corrected Reading: Antenna Factor + Cable Loss + Read Level - Preamp Factor = Level.

4.3. Emissions Measurement

4.3.1. Limit

20dBc in any 100 kHz bandwidth outside the operating frequency band. In case the emission fall within the restricted band specified on 15.205(a), then the 15.209(a) limit in the table below has to be followed.

Frequencies (MHz)	Field Strength (micorvolts/meter)	Measurement Distance (meters)
0.009~0.490	2400/F(kHz)	300
0.490~1.705	24000/F(kHz)	30
1.705~30.0	30	30
30~88	100	3
88~216	150	3
216~960	200	3
Above 960	500	3

4.3.2. Measuring Instruments and Setting

Please refer to section 5 of equipments list in this report. The following table is the setting of the spectrum analyzer.

Spectrum Parameter	Setting
Attenuation	Auto
Span Frequency	100 MHz
RBW / VBW (Emission in restricted band)	1MHz / 3MHz for Peak, 1MHz / 1/T for Average
RBW / VBW (30dBc in any 100 kHz bandwidth emission)	100 kHz / 300 kHz for Peak

4.3.3. Test Procedures

<u>For Radiated band edges Measurement</u>:

1. The test procedure is the same as section 4.2.3, only the frequency range investigated is limited to 100MHz around band edges.

<u>For Radiated Out of Band Emission Measurement</u>:

1. Test was performed in accordance with KDB 558074 D01 v03r02 for Performing Compliance Measurements on Digital Transmission Systems (DTS) Operating Under §15.247 section 10.1 Unwanted Emissions into Non-Restricted Frequency Bands Measurement Procedure.
2. The radiated emission test is performed on each TX port of operating mode without summing or adding 10log (N) since the limit is relative emission limit.
   Only worst data of each operating mode is presented.

4.3.4. Test Setup Layout

For Radiated band edges Measurement:

This test setup layout is the same as that shown in section 4.2.4.

For Radiated Out of Band Emission Measurement:

This test setup layout is the same as that shown in section 4.2.4.

4.3.5. Test Deviation

There is no deviation with the original standard.

4.3.6. EUT Operation during Test

The EUT was programmed to be in continuously transmitting mode.

4.3.7. Test Result of Band Edge and Fundamental Emissions

Temperature	24°C	Humidity	51%
Test Engineer	Satoshi Yang	Configurations	Channel 0, 20, 39
Test Date	Sep. 01, 2014		

Channel 0

	Freq	Level	Limit Line	Over Limit	Read Level	Cable Loss	Antenna Factor	Preamp Factor	Remark	T/Pos	A/Pos	Pol/Phase
	MHz	dBuV/m	dBuV/m	dB	dBuV	dB	dB/m	dB		deg	cm	
1	2381.91	48.10	54.00	-5.90	17.26	2.90	27.94	0.00	Average	39	100	VERTICAL
2	2387.84	57.01	74.00	-16.99	26.18	2.91	27.92	0.00	Peak	39	100	VERTICAL
3	2401.84	104.83			74.00	2.91	27.92	0.00	Peak	39	100	VERTICAL
4	2402.00	103.43			72.60	2.91	27.92	0.00	Average	39	100	VERTICAL

Item 3, 4 are the fundamental frequency at 2402 MHz.

Channel 20

	Freq	Level	Limit Line	Over Limit	Read Level	Cable Loss	Antenna Factor	Preamp Factor	Remark	T/Pos	A/Pos	Pol/Phase
	MHz	dBuV/m	dBuV/m	dB	dBuV	dB	dB/m	dB		deg	cm	
1	2388.08	52.88	54.00	-1.12	22.05	2.91	27.92	0.00	Average	37	100	VERTICAL
2	2390.00	57.75	74.00	-16.25	26.92	2.91	27.92	0.00	Peak	37	100	VERTICAL
3	2441.68	107.45			76.65	2.94	27.86	0.00	Peak	37	100	VERTICAL
4	2441.68	107.31			76.51	2.94	27.86	0.00	Average	37	100	VERTICAL
5	2484.14	56.02	74.00	-17.98	25.24	2.96	27.82	0.00	Peak	37	100	VERTICAL
6	2486.06	53.12	54.00	-0.88	22.34	2.96	27.82	0.00	Average	37	100	VERTICAL

Item 3, 4 are the fundamental frequency at 2442 MHz.

Channel 39

	Freq	Level	Limit Line	Over Limit	Read Level	Cable Loss	Antenna Factor	Preamp Factor	Remark	T/Pos	A/Pos	Pol/Phase
	MHz	dBuV/m	dBuV/m	dB	dBuV	dB	dB/m	dB		deg	cm	
1	2480.00	103.96			73.18	2.96	27.82	0.00	Average	38	100	VERTICAL
2	2480.24	105.32			74.54	2.96	27.82	0.00	Peak	38	100	VERTICAL
3	2483.50	47.39	54.00	-6.61	16.61	2.96	27.82	0.00	Average	38	100	VERTICAL
4	2484.06	55.64	74.00	-18.36	24.86	2.96	27.82	0.00	Peak	38	100	VERTICAL

Item 1, 2 are the fundamental frequency at 2480 MHz.

Note:

Emission level (dBuV/m) = 20 log Emission level (uV/m).

Corrected Reading: Antenna Factor + Cable Loss + Read Level - Preamp Factor = Level.

For Emission not in Restricted Band

Plot on Configuration / Reference Level

Plot on Configuration For Bluetooth 4.0 / Channel 0 / 30MHz~2400MHz (down 30dBc) (Vertical)

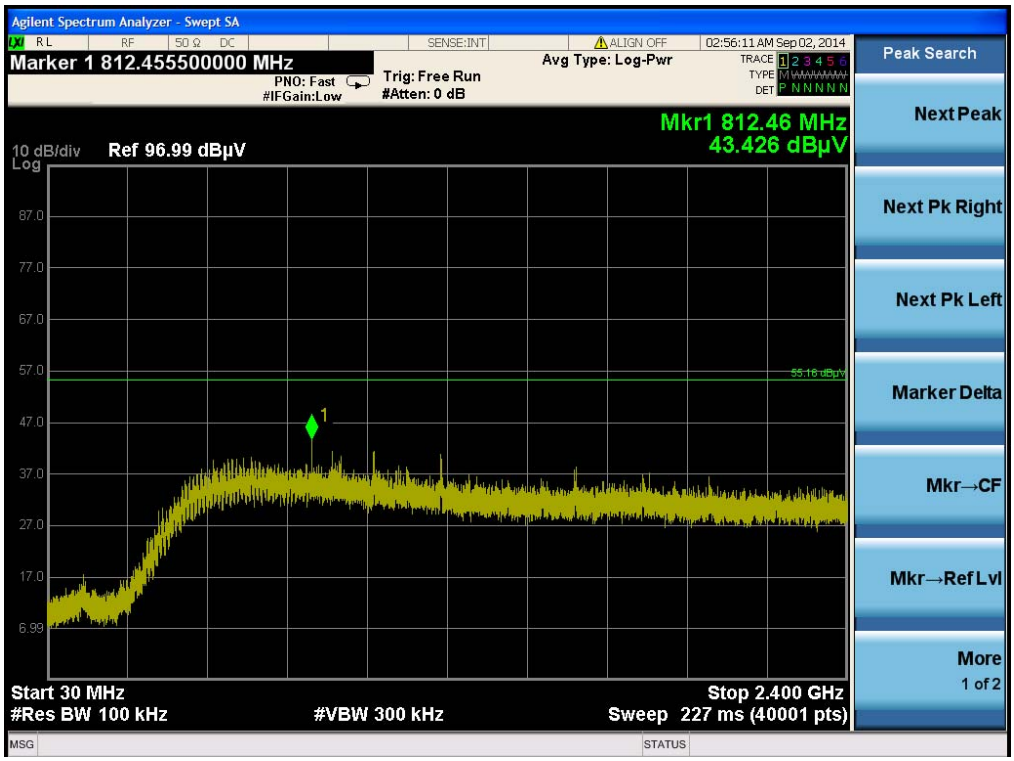

Note: Only the worse polarization (Vertical) is tested and recorded in test report.

Plot on Configuration For Bluetooth 4.0 / Channel 0 / 2500MHz~26500MHz (down 30dBc) (Vertical)

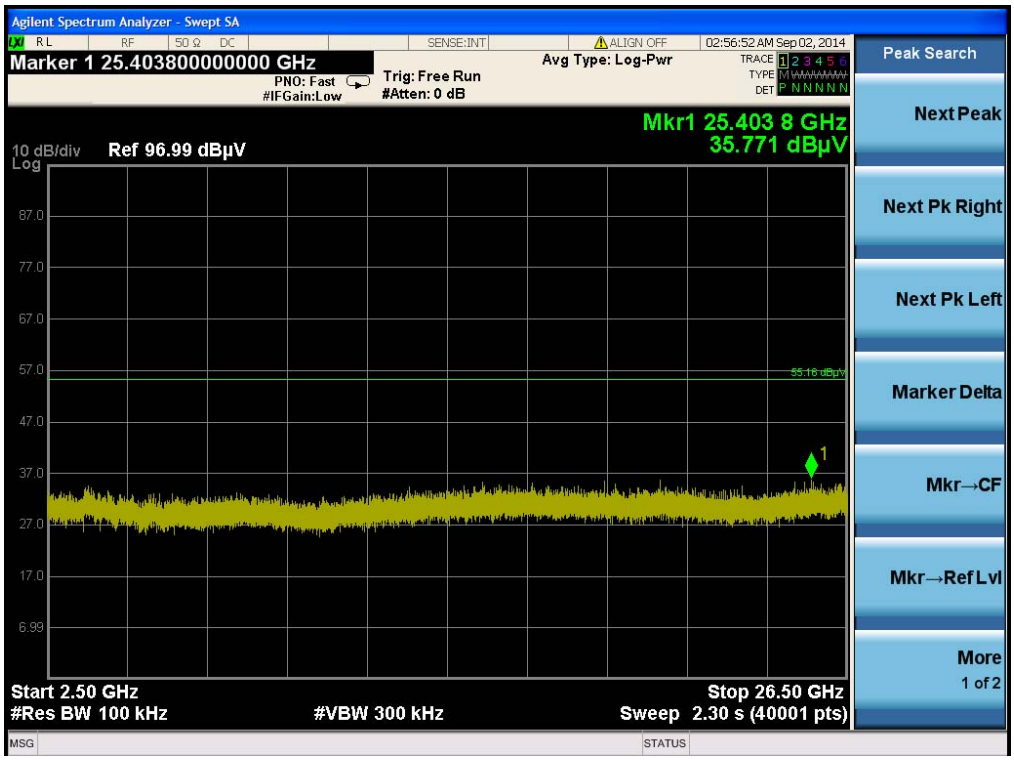

Plot on Configuration For Bluetooth 4.0 / Channel 39 / 30MHz~2400MHz (down 30dBc) (Vertical)

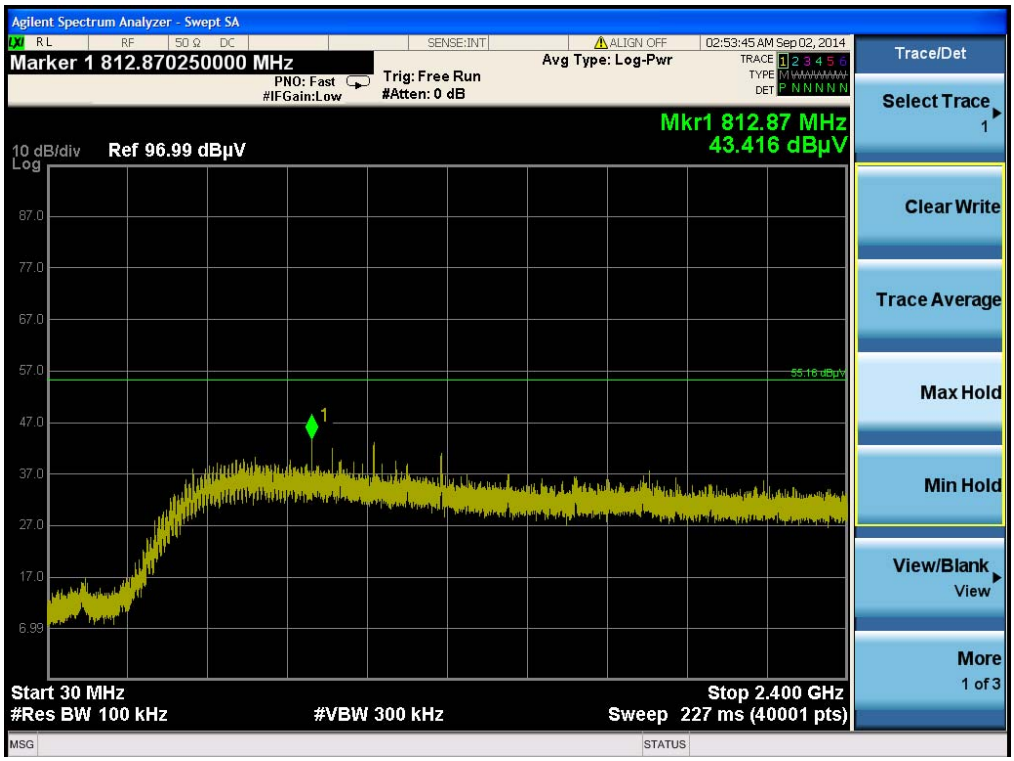

Note: Only the worse polarization (Vertical) is tested and recorded in test report.

Plot on Configuration For Bluetooth 4.0 / Channel 39 / 2500MHz~26500MHz (down 30dBc) (Vertical)

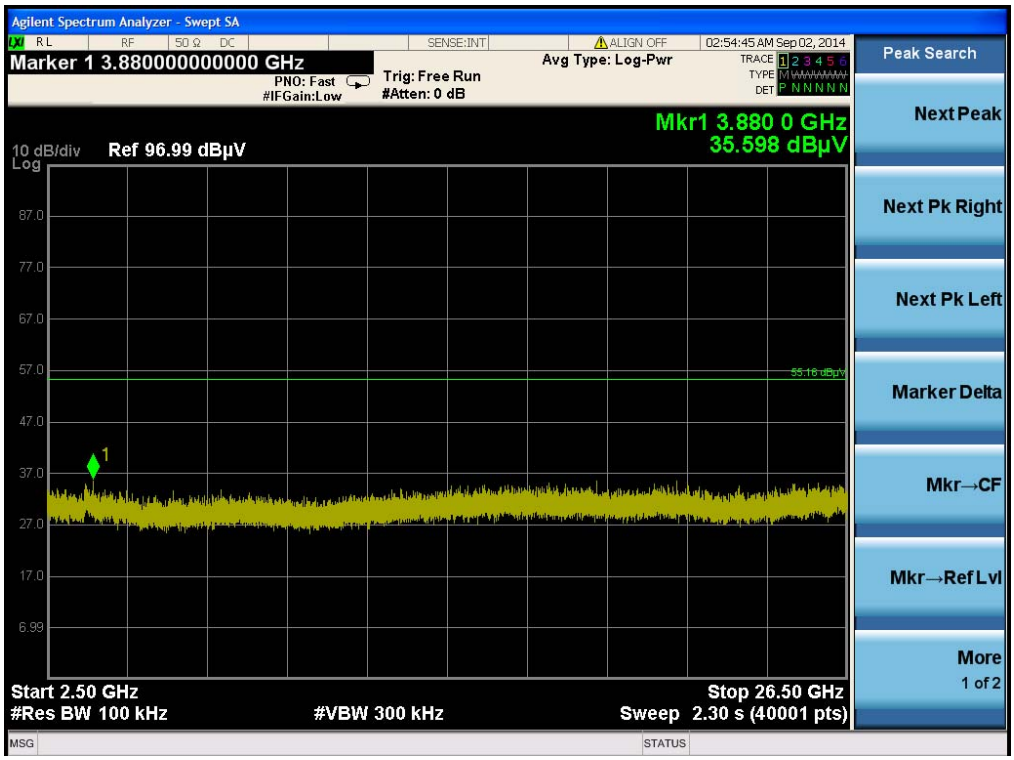

Note: Only the worse polarization (Vertical) is tested and recorded in test report.

4.4. Antenna Requirements

4.4.1. Limit

Except for special regulations, the Low-power Radio-frequency Devices must not be equipped with any jacket for installing an antenna with extension cable. An intentional radiator shall be designed to ensure that no antenna other than that furnished by the responsible party shall be used with the device. The use of a permanently attached antenna or of an antenna that uses a unique coupling to the intentional radiator shall be considered sufficient to comply with the provisions of this Section. The manufacturer may design the unit so that the user can replace a broken antenna, but the use of a standard antenna jack or electrical connector is prohibited. Further, this requirement does not apply to intentional radiators that must be professionally installed.

4.4.2. Antenna Connector Construction

Please refer to section 3.3 in this test report; antenna connector complied with the requirements.

5. LIST OF MEASURING EQUIPMENTS

Instrument	Manufacturer	Model No.	Serial No.	Characteristics	Calibration Date	Remark
BILOG ANTENNA	Schaffner	CBL6112D	22021	20MHz ~ 2GHz	May 26, 2014	Radiation (03CH01-CB)
Loop Antenna	Teseq	HLA 6120	24155	9 kHz - 30 MHz	Nov. 05, 2012*	Radiation (03CH01-CB)
Horn Antenna	EMCO	3115	00075790	750MHz~18GHz	Nov. 01, 2013	Radiation (03CH01-CB)
Horn Antenna	Schwarzbeck	BBHA 9170	BBHA9170252	15GHz ~ 40GHz	Dec. 17, 2013	Radiation (03CH01-CB)
Pre-Amplifier	Agilent	8447D	2944A10991	0.1MHz ~ 1.3GHz	Nov. 12, 2013	Radiation (03CH01-CB)
Pre-Amplifier	Agilent	8449B	3008A02310	1GHz ~ 26.5GHz	Dec. 16, 2013	Radiation (03CH01-CB)
Pre-Amplifier	WM	TF-130N-R1	923365	26GHz ~ 40GHz	Oct. 23, 2013	Radiation (03CH01-CB)
Spectrum analyzer	R&S	FSP40	100019	9kHz~40GHz	Dec. 02, 2013	Radiation (03CH01-CB)
EMI Test Receiver	Agilent	N9038A	MY52260123	9kHz ~ 8GHz	Dec. 12, 2013	Radiation (03CH01-CB)
Turn Table	INN CO	CO 2000	N/A	0 ~ 360 degree	N.C.R.	Radiation (03CH01-CB)
Antenna Mast	INN CO	CO 2000	N/A	1 m - 4 m	N.C.R.	Radiation (03CH01-CB)
RF Cable-low	Woken	Low Cable-1	N/A	30 MHz - 1 GHz	Nov. 17, 2013	Radiation (03CH01-CB)
RF Cable-high	Woken	High Cable-3	N/A	1 GHz - 40 GHz	Nov. 17, 2013	Radiation (03CH01-CB)
RF Cable-high	Woken	High Cable-4	N/A	1 GHz - 40 GHz	Nov. 17, 2013	Radiation (03CH01-CB)
Signal analyzer	R&S	FSV40	100979	9kHz~40GHz	Nov. 29, 2013	Conducted (TH01-CB)
Temp. and Humidity Chamber	Ten Billion	TTH-D3SP	TBN-931011	-30~100 degree	Jun. 04, 2013	Conducted (TH01-CB)
RF Cable-high	Woken	High Cable-7	-	1 GHz – 26.5 GHz	Nov. 17, 2013	Conducted (TH01-CB)
RF Cable-high	Woken	High Cable-8	-	1 GHz – 26.5 GHz	Nov. 17, 2013	Conducted (TH01-CB)
RF Cable-high	Woken	High Cable-9	-	1 GHz – 26.5 GHz	Nov. 17, 2013	Conducted (TH01-CB)
RF Cable-high	Woken	High Cable-10	-	1 GHz – 26.5 GHz	Nov. 17, 2013	Conducted (TH01-CB)
RF Cable-high	Woken	High Cable-11	-	1 GHz – 26.5 GHz	Nov. 17, 2013	Conducted (TH01-CB)
Power Sensor	Anritsu	MA2411B	0917223	300MHz~40GHz	Sep. 18, 2013	Conducted (TH01-CB)
Power Meter	Anritsu	ML2495A	1035008	300MHz~40GHz	Sep. 18, 2013	Conducted (TH01-CB)

Note: Calibration Interval of instruments listed above is one year.

"*" Calibration Interval of instruments listed above is two years.

N.C.R. means Non-Calibration required.

6. MEASUREMENT UNCERTAINTY

Test Items	Uncertainty	Remark
Radiated Emission (30MHz ~ 1,000MHz)	3.6 dB	Confidence levels of 95%
Radiated Emission (1GHz ~ 18GHz)	3.7 dB	Confidence levels of 95%
Radiated Emission (18GHz ~ 40GHz)	3.5 dB	Confidence levels of 95%
Conducted Emission	1.7 dB	Confidence levels of 95%