WARNING: Changes or modifications to this unit not expressly approved by the party responsible for compliance could void the user authority to operate the equipment.

NOTE: This equipment has been tested and found to comply with the limits for a Class B digital device, pursuant to Part 15 of the FCC Rules. These limits are designed to provide reasonable protection against harmful interference in a residential installation. This equipment generates, uses, and can radiate radio frequency energy and, if not installed and used in accordance with the instructions, may cause harmful interference to radio communications.
However, there is no guarantee that interference will not occur in a particular installation. If this equipment does cause harmful interference to radio or television reception, which can be determined by turning the equipment off and on, the user is encouraged to try to correct the interference by one or more of the following measures:

- Reorient or relocate the receiving antenna.
- Increase the separation between the equipment and receiver.
- Connect the equipment into an outlet on a circuit different from that to which the receiver is connected.
- Consult the dealer or an experienced radio/TV technician for help.

This device complies with Part 15 of the FCC Rules. Operation is subject to the following two conditions:
(1) This device may not cause interference, and
(2) This device must accept any interference, including interference that may cause undesired operation of the device.

This device complies with Industry Canada's license-exempt RSSs. Operation is subject to the following two conditions:
(1) This device may not cause interference; and
(2) This device must accept any interference, including interference that may cause undesired operation of the device.

The packaging must be retained since it contains important information.

CAUTION: Please read these carefully before using:

1. Only adults should install and replace batteries.
2. Rechargeable batteries are only to be charged under adult supervision.
3. Rechargeable batteries are to be removed from the toy before being charged.
4. Non-rechargeable batteries are not to be recharged.
5. If the device has not used for a long time, remove the batteries.
6. Do not mix old and new batteries.
7. Do not mix alkaline, standard (carbon zinc) or rechargeable (nickel cadmium) batteries.
8. Exhausted batteries are to be removed from the toy.
9. The supply terminals are not to be short-circuited.
10. Only batteries of the same or equivalent type as recommended are to be used.
11. Batteries are to be inserted with the correct polarity.
12. Do not dispose of batteries in fire, batteries may explode or leak.
13. Batteries may explode or leak if misused.

Transformer Ratings-Input: 100-240VAC 50-60Hz 0.35A; Output:9V ⎓ 1000mA

Conforms to the safety requirements of ASTMF963 and FCC regulations.
Conforms to the toy regulations of Canada consumer product safety act.
Conforms the safety requirements of EN71
CAN ICES-3(B)/NMB-3(B)

CAUTION : Do not mix old and new batteries. Do not mix alkaline, standard (carbon-zinc), or rechargeable (ni-cad,ni-mh, etc) batteries. Always replace the whole set of batteries at one time.

DISPOSAL OF USED BATTERIES

Battery may contain hazardous substances which could endanger the environment and human health. This symbol marked on the battery and/or packaging indicates that used batteries should not be treated as municipal waste. Batteries should be disposed at an appropriate collection point for recycling. By ensuring the used batteries are disposed of correctly, you will help prevent potential negative consequences for the environment and human health. The recycling of materials will help to conserve natural resources. For more information about recycling of used batteries, please contact your local municipality waste disposal service.

Official Licensed Product

Ford Motor Company Trademarks and Trade Dress used under license to Kid Galaxy, Inc.

©2021 Kid Galaxy, Inc. All Rights Reserved.
Kid Galaxy, Inc. 150 Dow St. Manchester, NH 03101 U.S.A.
MADE IN CHINA.
1-800-816-1135 | Visit our website! www.kidgalaxy.com

TROUBLESHOOT HELP. CALL US! 1-800-816-1135 or email: customerservice@kidgalaxy.com

POWER DRIVE

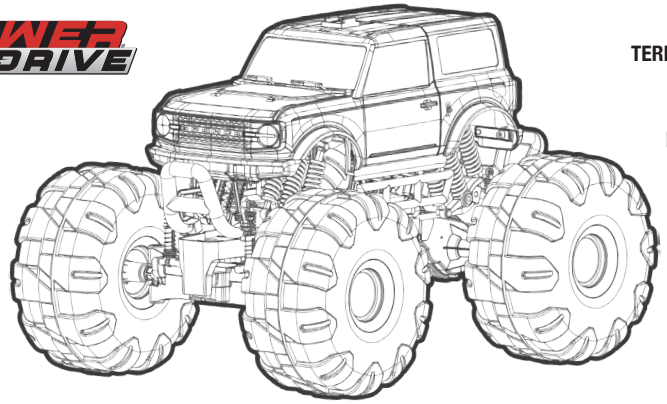

FOR AGES: 8+
TERRAIN: INDOOR/OUTDOOR

INCLUDES:
RECHARGEABLE LITHIUM ION BATTERIES
CONTROLLER
2-AAA BATTERIES
INSTRUCTION SHEET

FORD BRONCO

CHARGE VEHICLE

Fully charge battery first time charging.

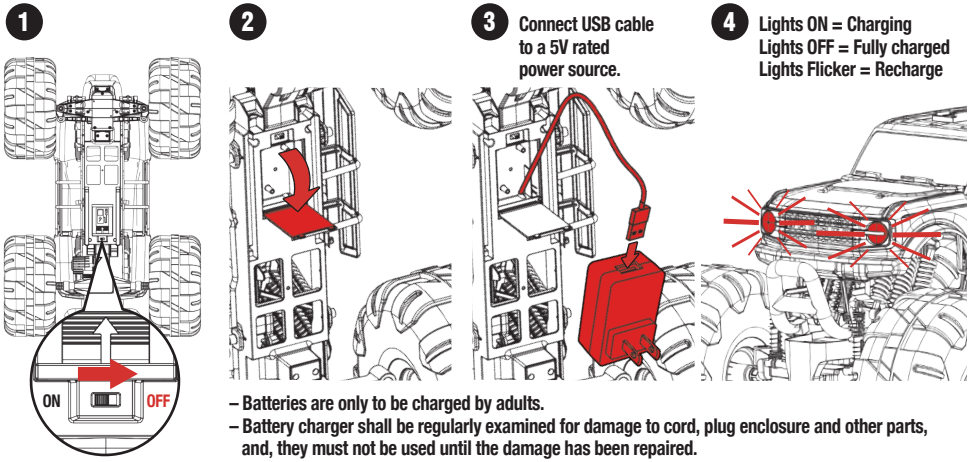

– Batteries are only to be charged by adults.
– Battery charger shall be regularly examined for damage to cord, plug enclosure and other parts, and, they must not be used until the damage has been repaired.

BATTERIES: Vehicle requires 1-9.6V rechargeable battery (included) • Controller requires 2-AAA alkaline batteries (included)

CAUTION: NOT A RIDE-ON TOY. NOT INTENDED TO BEAR WEIGHT OF A CHILD.
DO NOT DRIVE ON TALL GRASS, SAND, OR TRAVEL THROUGH WATER.
DO NOT DRIVE IN RAIN, SNOW, OR BLIZZARD CONDITIONS.
AVOID DIRECT IMPACT WITH OBJECTS...BUT IT HAPPENS.
SWITCH OFF POWER WHEN NOT IN USE.
KEEP HAIR, FINGERS, AND LOOSE CLOTHING AWAY FROM MOVING WHEELS.

CAUTION: HAIR ENTANGLEMENT -
Tie back and cover hair and secure loose clothing prior to play.

CONTROLLER

REMOTE BATTERY INSTALL

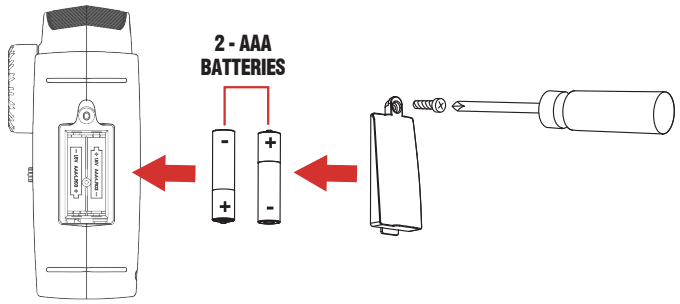

CONTROLS

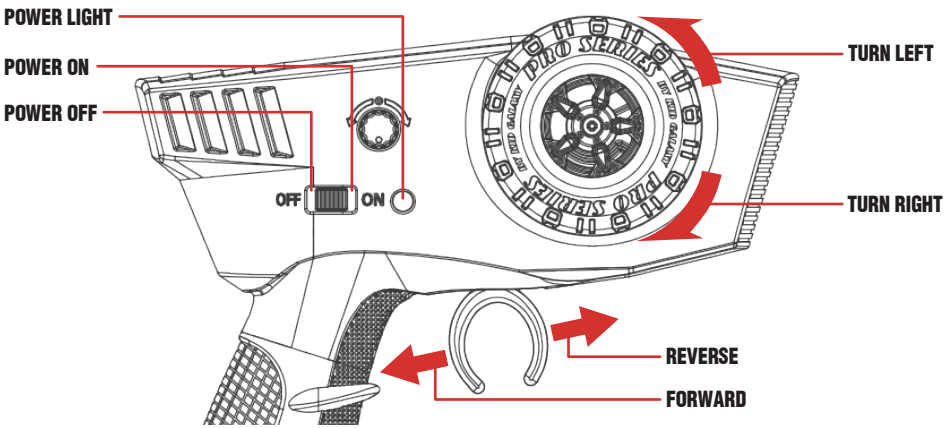

PAIRING

Hold controller near vehicle and turn power on both controller and vehicle.
Headlights Flashing = Not Paired
Headlights On = Paired

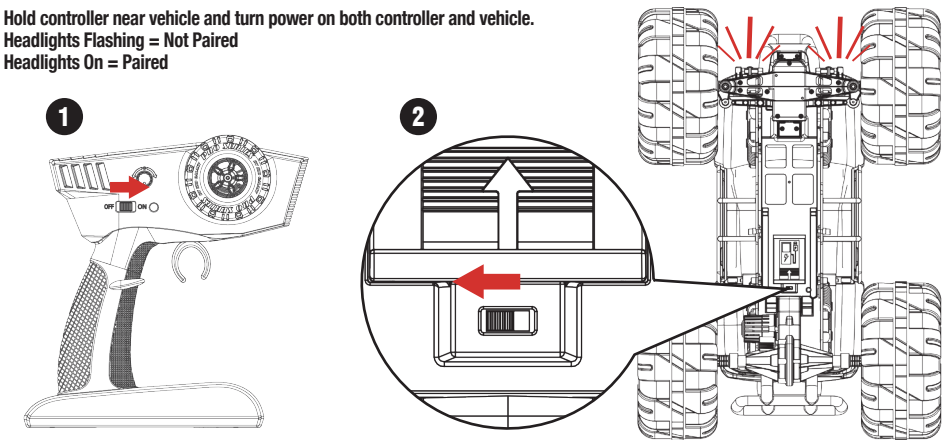

TROUBLE SHOOTING TIPS

If truck does not connect to controller first time, turn truck off, remove batteries from controller, and repeat installation instructions to pair controller with vehicle.

CONTROLLER

ALIGNMENT

Adjust before each use.

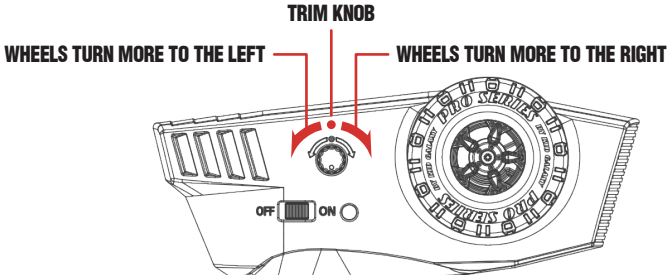

FORWARD/NEUTRAL/REVERSE

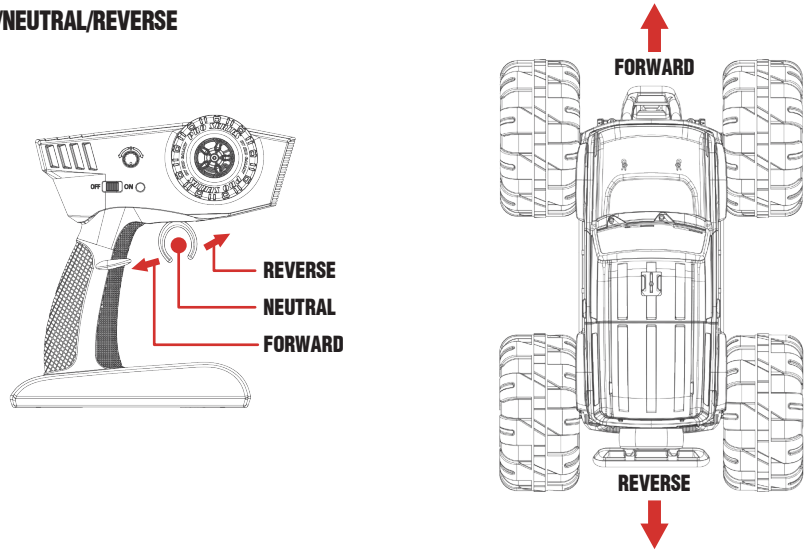

TURNING

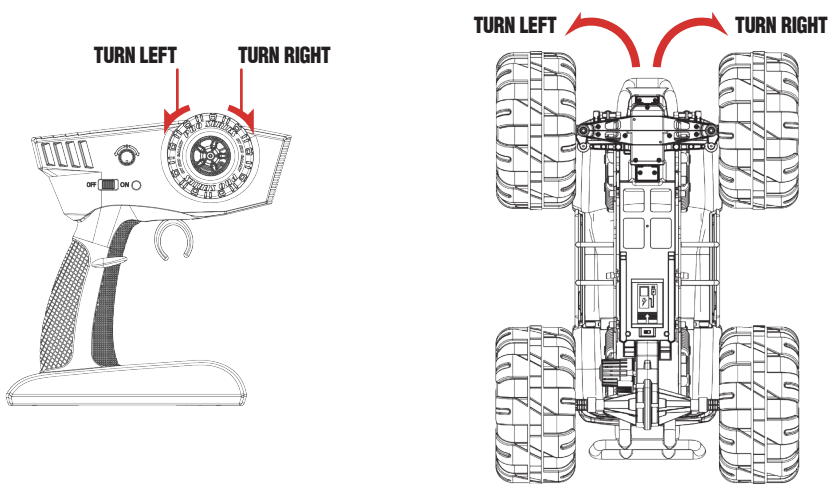

TROUBLESHOOT HELP. CALL US! 1-800-816-1135 or email: customerservice@kidgalaxy.com