ip access
Small cells everywhere

nanoLTE

High speed coverage where it's needed most

nanoLTE AP Hardware Installation

NANO_INST_43311 101_0.2

ip.accessLtd
Building 2020
Cambourne Business Park
Cambourne
Cambridgeshire
CB23 6DW
United Kingdom

Notices

This document is provided to you by or on behalf of ip.access Ltd ("ip.access").

© ip.access Limited 2016.

The documentation and any software described herein and/or provided to you in conjunction with this documentation contain proprietary and confidential information of ip.access and may only be used subject to a license agreement containing restrictions on use and disclosure. They are also protected by copyright, patent rights and other intellectual and industrial property laws. The information contained in this document and any software described herein is subject to change without notice. If you find any problems in the documentation and/or the software please report them to us in writing. The document and/or the software are not warranted to be error-free. No right, title, license or interest in any physically or electronically distributed materials is transferred to you by such distribution. No part of this document and/or the software may be reproduced, displayed, copied, translated, adapted, downloaded, electronically transmitted, used or reproduced in any form including (without limitation) distribution or storage in a system for retrieval without our express written permission (which may be subject to conditions).

The documentation and/or software may provide links to Web sites and access to content, products, and services from third parties. ip.access is not responsible for the availability of, or any content provided on, third-party Web sites. You bear all risks associated with the use of such content. If you choose to purchase any products or services from a third party, the relationship is directly between you and the third party. ip.access is not responsible for: (a) the quality of third-party products or services; or (b) fulfilling any of the terms of the agreement with the third party, including delivery of products or services and warranty obligations related to purchased products or services. ip.access is not responsible for any loss or damage of any sort that you may incur from dealing with any third party.

ip.access is the owner of the "ip.access" trademark and all associated trade names, logos and devices unless indicated to the contrary. Any other trademarks, logos and names appearing in this document may be the property of their respective owners.

ip.access Limited is a Private Limited Company Registered in England and Wales
Company No. 03400157

Registered Office:
Building 2020
Cambourne Business Park
Cambourne
CB23 6DW
UK
Tel: +44 (0) 1954 713 700
Fax: +44 (0) 1954 713 799

Further company information may be found at www.ipaccess.com.

Revision History

Version	Change Summary	Date	Author
101_0.1	Updated for N4G_1.1, add regulatory information for E40 248M	16 Mar 2016	AM4
101_0.2	Add hardware capability equivalence statement for 248 and 278	19 Jul 2016	AM4

Table of Contents

1 Introduction 1
1.1 Overview 1
1.2 Warnings and Regulatory Information 1
1.3 Related Information 1
1.4 Licenses and Copyright Notices 1
1.5 Terminology 1

2 Installation Overview and Requirements 2
2.1 Installation Tasks 2
2.1.1 Pre-Provisioning 2
2.1.2 On Site Installation 2
2.2 Requirements for All nanoLTE APs 3
2.2.1 Site Installation Requirements 3
2.2.2 nanoLTE AP Cooling 3
2.2.3 Port Usage 4
2.3 nanoLTE E40 AP Site Requirements 5
2.3.1 nanoLTE E40 AP Power Requirements 5
2.3.2 E40 AP Physical Requirements 6
2.3.3 Thermal Protection 6
2.3.4 E40 AP Backhaul (IP) Bandwidth Requirements 6
2.3.5 E40 AP Installation Tool Requirements 6

3 nanoLTE E40 AP Hardware Installation 7
3.1 Unpack the E40 AP 7
3.2 Removable Connector and Antenna Cover 8
3.3 Cable Connections 10
3.4 Mount the E40 AP on a Wall 11

4 Troubleshooting 13
4.1 nanoLTE E40 AP Does Not Power Up 13
4.2 nanoLTE E40 AP LEDs 14
4.3 Factory Reset 15
4.3.1 E40 Factory Reset 17

5 nanoLTE AP and PSU Regulatory Information 18
5.1 Warnings and Cautions 18
5.2 Hardware Equivalence for 248 and 278 Product Variants 20
5.3 Regulatory Statements for nanoLTE E40 AP 20
5.3.1 EU Regulatory Compliance 20
5.3.2 US FCC Compliance 21
5.3.3 Safety Standards 21
5.3.4 Environmental Standards 21

5.4 Regulatory Statements for PSU 22
5.4.1 Output Specification 23

1 Introduction

The ip.access nanoLTE AP is an indoor Access Point for enterprise small cell applications.

This manual provides all the necessary information required for hardware installation of a nanoLTE AP.

1.1 Overview

This manual is organised as follows:

- This introduction
- An overview of AP installation, including site requirements for all AP variants and specific requirements for each AP model
- AP hardware installation by AP type:
  - nanoLTE E40 AP
- Troubleshooting
- Regulatory warnings and safety information

1.2 Warnings and Regulatory Information

For all warnings and regulatory information, see section 5.

1.3 Related Information

[GST_41050]	nanoLTE System Planning (NANO_GST_41050)
[INST_43370]	nanoLTE AP Pre-Provisioning and Configuration (NANO_INST_43370)
[OPM_43005]	nanoLTE AP Operations (NANO_OPM_43005)
[REF_11105]	System Glossary (NANO_REF_11105)
[REF_43005]	nanoLTE AP Open Source Software (NANO_REF_43005)
[TRB_43005]	nanoLTE AP Troubleshooting (NANO_TRB_43005)
[21.905]	Vocabulary for 3GPP Specifications (3GPP TR 21.905)

1.4 Licenses and Copyright Notices

Portions of the AP are constructed from third-party software and open source code and ip.access Ltd gratefully acknowledges the contributions that these libraries, technologies and components have made to the product. Each of these is supplied under the terms of a license agreement and these are either reproduced or referenced in [REF_43005], in line with the stipulations of their authors.

1.5 Terminology

Common System terminology is defined in [REF_11105].

For additional terminology, see [21.905].

2 Installation Overview and Requirements

2.1 Installation Tasks

The tasks that must be completed to install a nanoLTE AP and make it ready to provide service are:

- Pre-Provisioning
- Site installation

These tasks can be completed in any order. In most cases, however, the most practical approach is to pre-provision an AP before site installation. The procedures for these activities are provided in the AP Configuration Manual [INST_43370].

2.1.1 Pre-Provisioning

For information about AP pre-provisioning, see the AP Configuration Manual [INST_43370].

This manual has no further information on AP configuration.

2.1.2 On Site Installation

Physical installation of a nanoLTE AP at its operating site, including providing the AP with power and a suitable network connection that provides a backhaul path to the NOS Server and EPC.

If a nanoLTE AP has been enabled for service prior to the site visit, the installation engineer can make test calls immediately.

Note: Due to the physical installation requirements of a nanoLTE AP, which **must** be securely wall mounted in a location with adequate ventilation, it is recommended that an E40 AP is installed by a suitably qualified site installation engineer.

2.2 Requirements for All nanoLTE APs

This applies to all nanoLTE APs.

2.2.1 Site Installation Requirements

All nanoLTE AP models have the following general requirements for installation:

- A permanent means to provide power to the AP once it is connected to the backhaul
- An Ethernet connection to the backhaul via CAT5 Ethernet cabling
- Access to a DNS service on the backhaul to resolve symbolic addresses
- Access to NTP services on the backhaul to set the correct time and date each time the AP starts up
- Access to a DHCP service on the backhaul to allow dynamic IP address configuration
- If IPsec will be used to secure the interface across the backhaul, access to the relevant Security Gateway that terminates the IPsec tunnel
- If a firewall is in place on the network an AP will use for backhaul, this must be configured to allow traffic to and from the AP - see the port usage section below

Note: If possible, the engineer should stay on site until the AP is brought into service, ready to make test calls to verify the AP has been configured correctly from the NOS.

2.2.2 nanoLTE AP Cooling

Special attention **must** be given to ensure a nanoLTE AP will meet its air cooling requirements in its installed location.

Take the following points into consideration for the physical location of an AP:

- All AP models **must** be installed so that they are upright, to ensure proper air will flow through the body of the AP to provide cooling.
- All AP models **must no**t be installed in enclosed spaces where air flow is restricted. This includes, but is not necessarily limited to:
    - Roof or ceiling spaces
    - Small cabinets
    - Tightly enclosed shelf spaces

2.2.3 Port Usage

This information is provided in case it is needed for configuring local on-premises equipment, especially any hardware firewalls between the AP and the rest of the backhaul network.

All connections are outgoing. That is, they are initiated from the AP. Port usage has some dependency on whether or not the AP is using IPsec.

With IPSec, the standard two ports are used:

Protocol	Destination Port	Use
udp	500	IPSec initial connection
udp	4500	IPSec operations

Without IPSec, the following ports are used:

Protocol	Destination Port	Use
sctp	36412	SCTP connection
udp	2152	PS GTP to EPC

These ports are used and allowed through the firewall where IPsec is used:

Protocol	Destination Port	Use
tcp	80	PM upload, software download, CRL download
udp	53	DNS
udp	123	NTP

The following ports are allowed through the firewall independently of IPsec configuration. For example:

AP > Firewall > DHCP Server

Protocol	Destination Port	Use
udp	67	DHCP - not needed for static IP configuration
udp	68	DHCP - not needed for static IP configuration

2.3 nanoLTE E40 AP Site Requirements

In addition to the site requirements for all APs, each E40 AP will require:

- A site for wall mounting
- Power supplied via the supplied mains adaptor unit, supplied separately, which requires a suitable mains power supply point near the AP that is within reach of the adaptor's cabling.

2.3.1 nanoLTE E40 AP Power Requirements

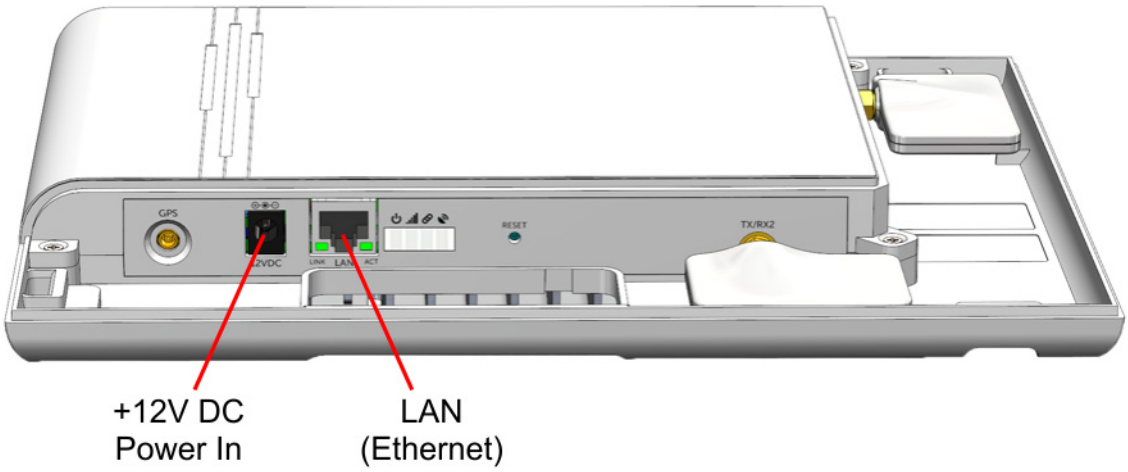

Maximum expected power consumption:

- 20 Watts (Rated +12V on the DC input)

The E40 AP uses Direct power from a suitable DC source (+12V, 2.5A rated centre positive 2.1mm jack) - a suitable mains adaptor is supplied.

PSU

The E40 does not use POE. The following 12V PSU is supplied:

There must be a suitable mains power supply point for plugging in the power adapter. The lead on the PSU is approximately 1.5m long, hence the power supply point must be within 1.5m of the AP.

2.3.2 E40 AP Physical Requirements

An E40 AP is installed by attaching its mounting plate to a wall or partition with screws, then sliding the rear surface of the AP onto the mounting plate.

Pay attention to ensure that air can circulate freely around the unit. The unit must be vertical.

It is recommended to install the AP with its front surface facing the area requiring cellular coverage, unobstructed by walls or partitions that may cause significant RF attenuation.

Dimensions and weight	Height	202mm
	Width	266mm
	Depth	41mm
	Approximate Weight	1.2 kg
Environmental	Cooling	Vents on the back at top and bottom
	Operating Temperature	0°C to +45°C
	Operating Humidity	10 to 70% non-condensing

2.3.3 Thermal Protection

The nanoLTE E40 AP may become warm during normal operation.

Ensure the AP is in a location where it will be at least 20cm away from personnel and any items that may be heat sensitive.

2.3.4 E40 AP Backhaul (IP) Bandwidth Requirements

At maximum capacity and with IPsec in use, a nanoLTE E40 AP will require:

- Downlink: 100Mbps
- Uplink: 37.5Mbps

This will provide bandwidth for 16 users.

2.3.5 E40 AP Installation Tool Requirements

To mount the bracket onto the wall:

- 4 pan head screws, size No. 6 (approx 3.5mm (0.14in) in diameter), for the AP bracket.
- Wall plugs if required.
- Suitable drills and screwdriver.

3 nanoLTE E40 AP Hardware Installation

3.1 Unpack the E40 AP

1) Unpack the AP and its accessories.

   Box contents may vary, but typically the box should contain the following:

   - E40 AP unit with wall bracket attached
   - Extraction tool for removing the AP from its wall bracket
   - Mains power supply unit

2) Check that the serial number on the AP unit matches the label on the box.

3) Check that the items have not been damaged in transit.

   For any damaged units, contact the supplier immediately for returns advice.

3.2 Removable Connector and Antenna Cover

The E40 AP has one removable cover.

1) Place the unit on a flat surface. To locate the clips holding the antenna cover, inspect the underside of the unit:

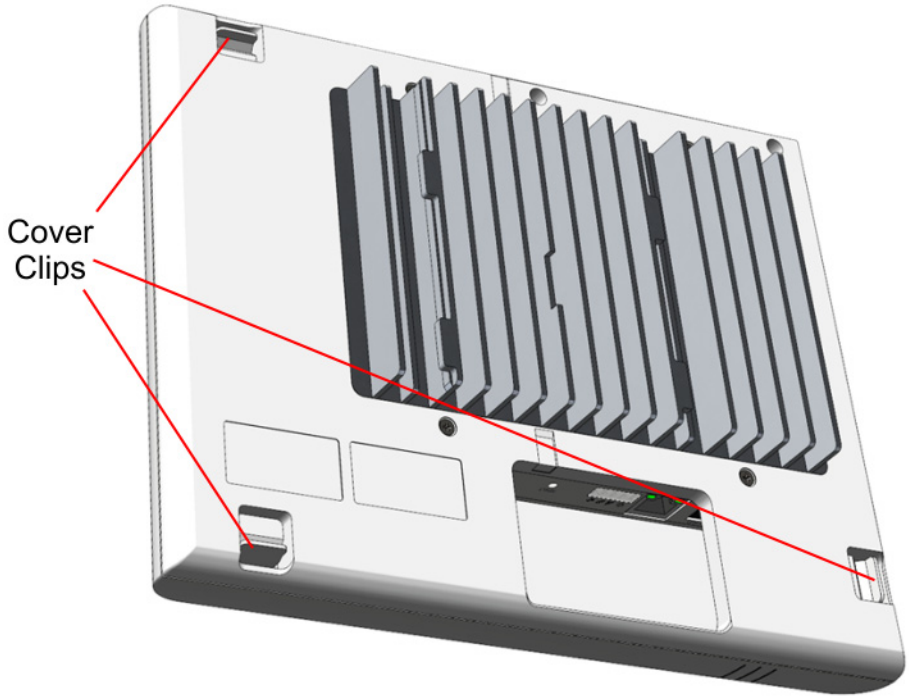

2) With the unit face up, gently squeeze each of the clips holding the antenna cover until they are all undone. Do not apply excessive force.

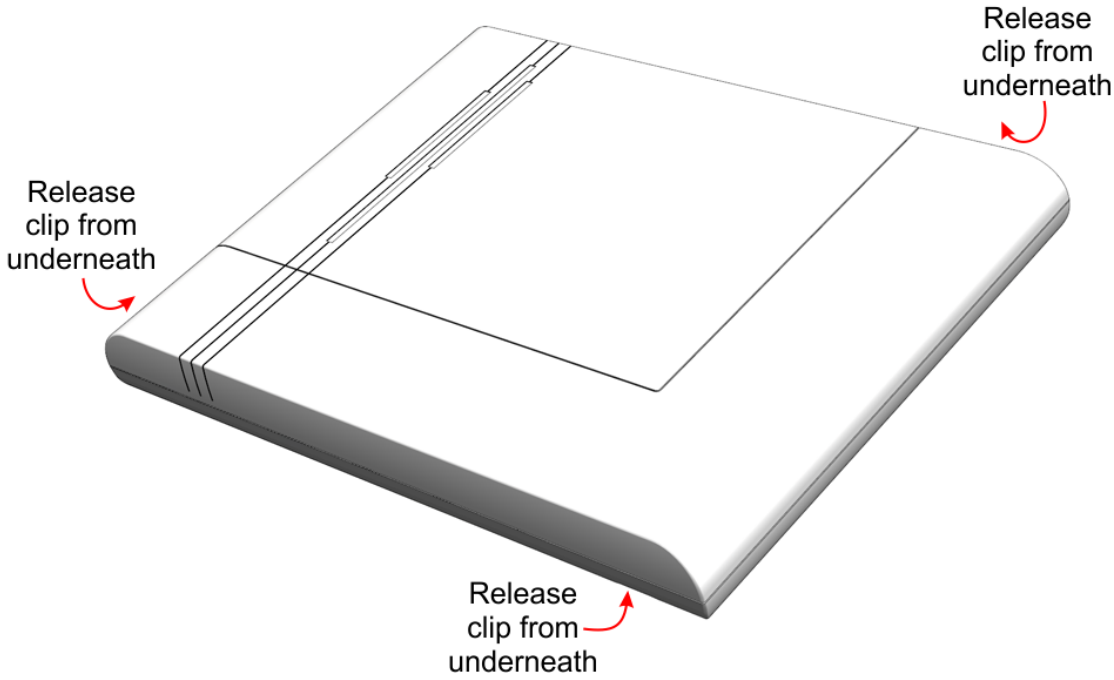

3) Lift off the cover:

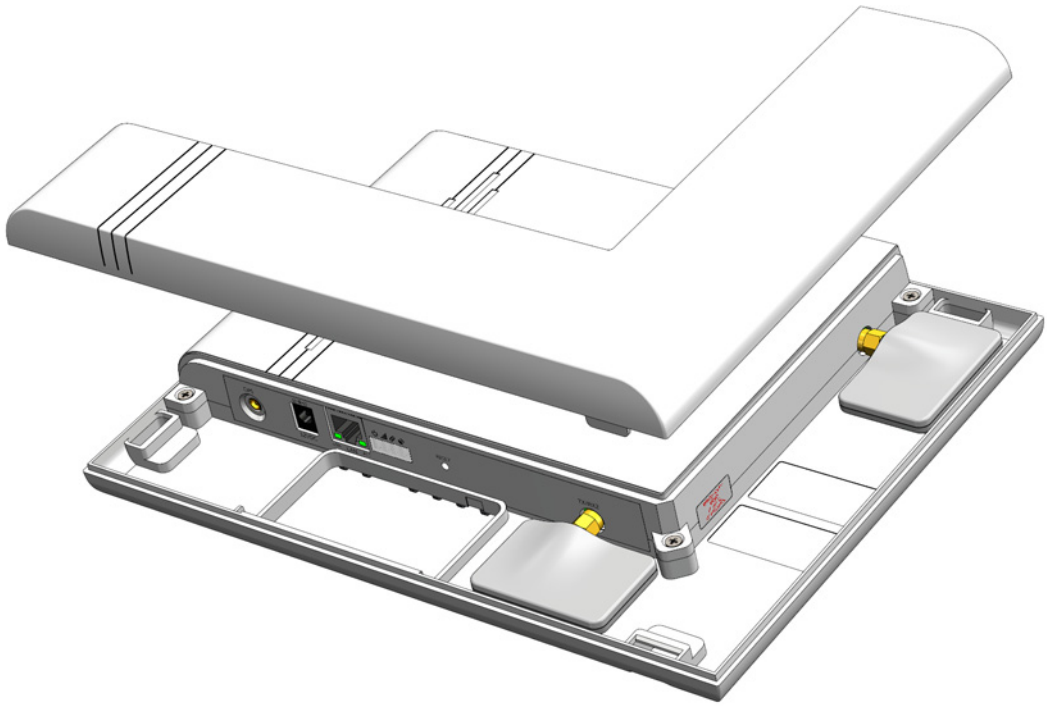

4) To refit the cover, simply place it in position and press down gently until the cover securely snaps into place.

The antennas must be oriented perpendicular to the unit, as shown, so that the cover fits correctly without stressing the connectors.

To fit external antennas, first remove the plastic cover from the antenna side of the unit. Unscrew the antennas to expose the SMA connectors. Connect external antennas directly to the SMA connectors. Route the cables through the gap in the back cover, then refit the cover.

3.3 Cable Connections

The nanoLTE E40 AP requires an Ethernet cable connection to the backhaul and power from the mains via the supplied power adapter:

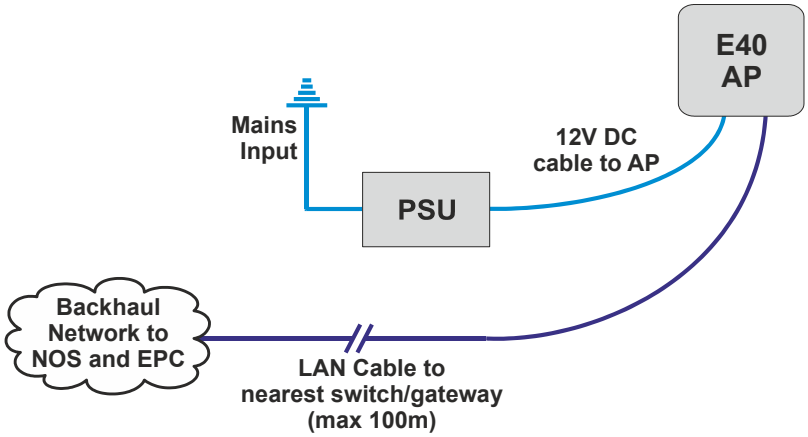

A mains socket providing power to the AP must be within reach of the cabling included with the PSU. This is typically less than 1.5m. The PSU for the E40 AP is supplied.

Note: The nanoLTE E40 AP cannot be powered with PoE or PoE+.

3.4 Mount the E40 AP on a Wall

Note: The E40 AP should be installed in a position so that it is at least 2m away from the area where handsets are normally used.

The E40 AP must be mounted vertically to ensure air circulation around the unit.

The location of each E40 AP should be shown on an installation floor plan produced at the network planning stage. For example, it must take into account that all APs must be at least 2m from any mobile equipment. The network wiring must be complete before the E40 AP can be installed and commissioned. The E40 AP should be placed on a wall at or above head height.

1) Remove the wall bracket from the E40 AP. Lay the AP on a flat surface with the wall bracket upwards. Slide the removal tool over the central guide groove over the fin between the bracket and the body of the unit to disengage the locking spring, then slide the bracket to separate it from the AP. The removal tool may be inserted from the top or bottom of the AP.

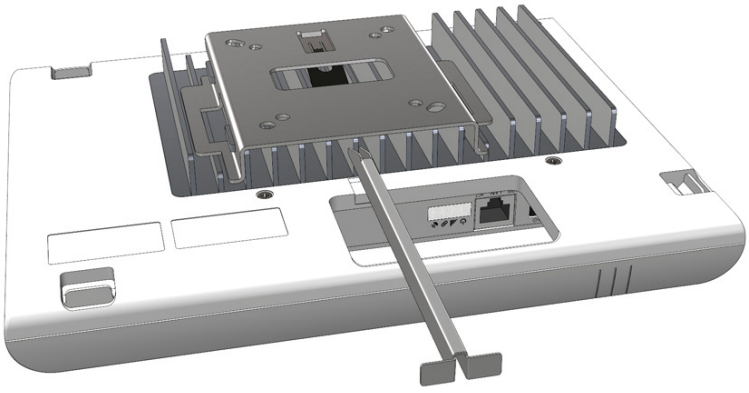

2) Position the bracket on the wall with its flat surface against the wall and the clip part towards the top. Ensure the bracket is level and sufficient clearance is maintained to allow the AP to be fitted to the bracket. Allow at least 100mm from the bracket to the top of wall, and 150mm from the side of the bracket to a side wall.

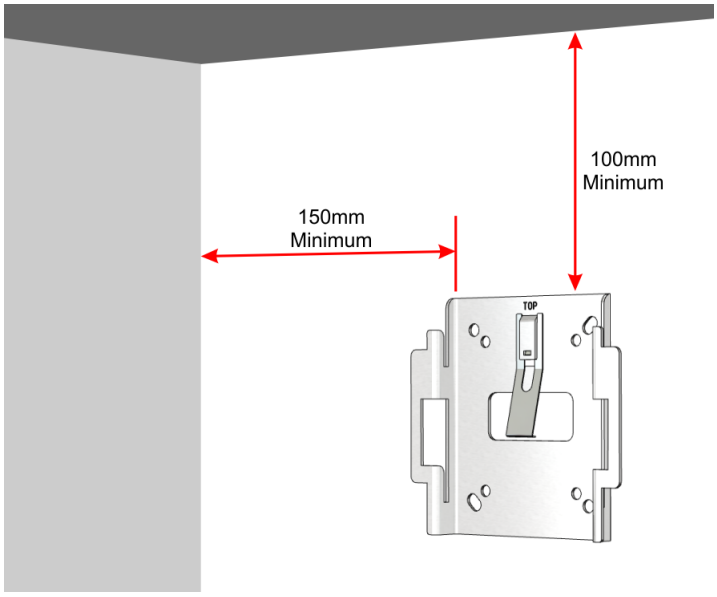

3) Mark the position of the four screw holes.

4) Drill the four holes in the positions marked previously and insert wall plugs (if required) and fix the mounting bracket securely to the wall.

5) Slide the E40 AP onto the bracket and ensure that the retaining spring engages into the indent at the rear of the unit.

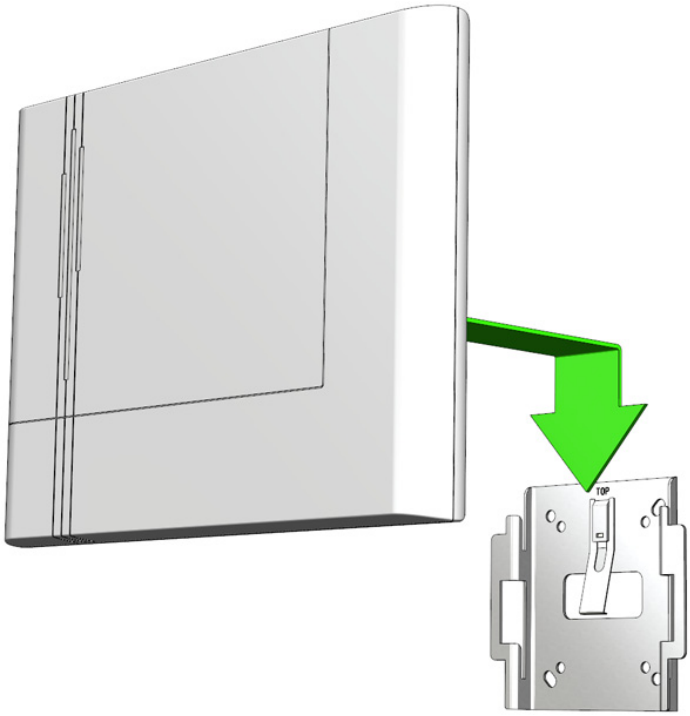

6) Remove the cover to reveal the cable ports and LEDs.

7) Plug in the required cables. Plug an Ethernet cable from a switch/gateway into LAN and an optional power supply into the +12V DC input:

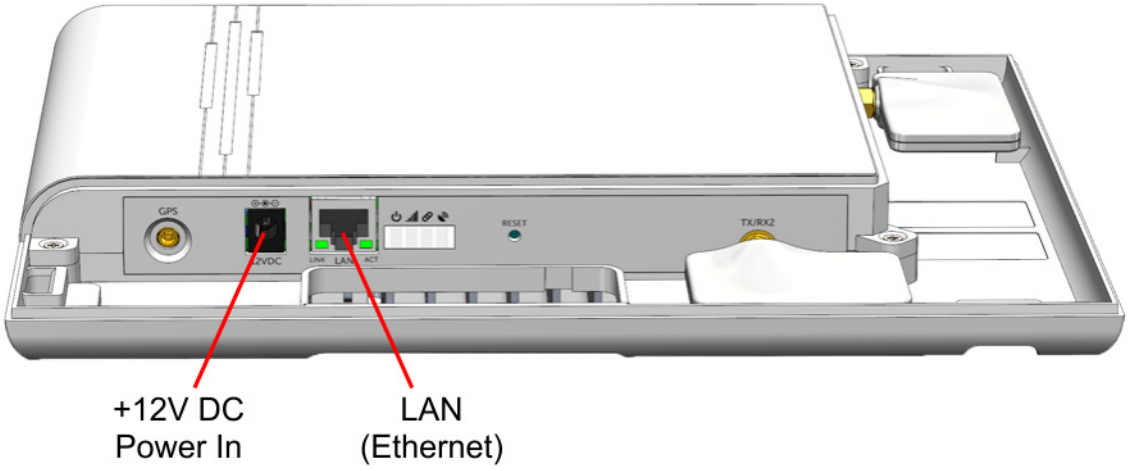

Route the cables through the opening in the back cover.

8) To refit the lower cover, slide it onto the main cover until the tabs snap into place.

4 Troubleshooting

This section covers the following topics that may be useful for troubleshooting APs during installation and commissioning:

- *4.1 nanoLTE E40 AP Does Not Power Up*
- *4.2 nanoLTE E40 AP LEDs*
- *4.3 Factory Reset*

For more information on AP troubleshooting, see [TRB_43005].

4.1 nanoLTE E40 AP Does Not Power Up

Check the following:

- Verify the correct power supply is in use and that mains power is available.
- Ensure that PoE is not fed into the AP (the nanoLTE E40 AP does not use PoE or Poe+).

4.2 nanoLTE E40 AP LEDs

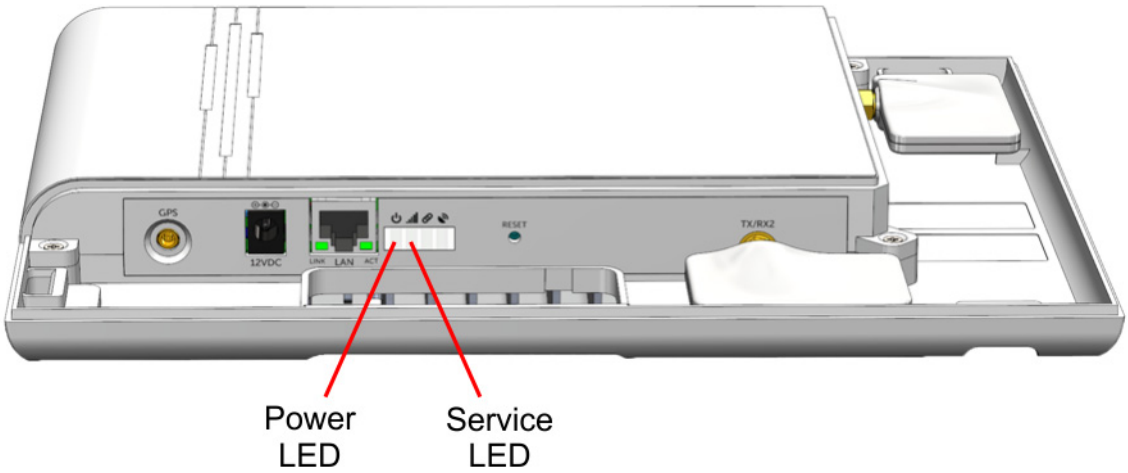

The following table shows the meaning of the status indicators under normal and fault conditions.

Power	Off	The nanoLTE AP is not switched on.
	Green	The nanoLTE AP is powered up normally.
	Red	There is a fault with the nanoLTE AP.
Service	Off	The nanoLTE AP is not provisioned, it has no IP address. This may be a temporary condition when the AP is switched on for the first time, or after factory reset.
	Green off, Red on	Cell down, service not available and serious SW fault
	Flashing green (1800msec on, 200msec off), Red off	Cell down, service not available
	Green flashing(500 msec on, 500 msec off), Red off	Cell locked, service not available
	Green flashing(50msec on, 50msec off), Red off	Nornal reboot, when reset button pressed for less than 5 secs
	Green flashing(50ms on, 200ms off), Red off	Factory reset, when reset button pressed for more than 5 secs

Note: The two remaining LEDs are not currently used.

Note: The Ethernet port has standard indicator LEDs, showing when the network connection is up and flashing for network activity.

4.3 Factory Reset

Only use a factory reset when there is no other way to repair the AP connection to either the IPsec SecGW and/or the NOS Server. First ensure that all other possibilities have been explored and eliminated.

A factory reset will clear the configuration supplied to the AP by the NOS (or TR-069 ACS if the NOS is not used). Hence the AP will retain the following information after a factory reset:

- Factory configuration data that cannot be changed, which includes:
  - The AP's Equipment ID (EID)
  - The FQDN for the ip.access NTP services hosted by ntp.org
  - The FQDN of the Field Redirector
  - The FQDN of the primary ip.access CRL mirror server
- If the AP has already successfully obtained its unique OLM Package, it will also have:
  - The DOCP, containing the parameters the AP needs to connect to its serving NOS (see below)
  - Certificates

The DOCP parameters are permanently stored by the AP, and will be used if the AP performs a factory reset. However, they are overridden with the configuration that the AP obtains from the NOS server when it connects for the first time. If this downloaded configuration is incorrect, this may subsequently prevent the AP from successfully re-connecting to the Security Gateway and/or the correct NOS.

In the NOS Client, check these parameters, which are the parameters supplied to the AP in the DOCP, as downloaded from the Field Redirector in its unique OLM Package:

Select in Navigation Pane	**Parameter**	**Notes**
Device.ManagementServer	X_000295_DefaultMgmtServerURL	The NOS the AP will attempt to connect to.
Device.Time	X_000295_DefaultNTPServer	If this is incorrectly configured, the AP will be unable to set its clock time. Hence it will be unable to validate any certificates and establish an IPsec tunnel. In this case, the "Default" values are likely to be null.
Device.Security	X_000295_DefaultCRLServerBaseUrl	If this is incorrectly configured, the AP will be unable to validate any certificates and establish an IPsec tunnel. In this case, the "Default" values are likely to be null.
Device.IPsec	X_000295_DefaultIPsecEnable	If it is expected that the AP will use IPsec, this will only be unchecked if the AP has not yet been able to connect to the NOS.
Device.IPsec	X_000295_DefaultRemoteTrafficSelectors	A list of remote Traffic Selectors supplied to the AP.
FAPService.{i}.FAPControl.UMTS.Gateway	X_000295_DefaultSecGWServer	The serving IPsec gateway address.

If all these Default values are null, this means that the AP has never connected to the NOS, so it has been unable to inform the NOS with these values. In this case, check the AP's ability to connect to the Field Redirector and the IPsec SecGW. For example, ensure any on-site firewall is allowing the AP to connect to the Internet and also allows IPsec to pass through.

If the default values are populated, this shows means the AP has been able to connect at least once. Hence, in this case, check the AP configuration provisioned from the NOS. That is, ensure these parameters are set correctly:

Select in Navigation Pane	**Parameter**	**Notes**
Device.ManagementServer	URL	The configured NOS address. In most cases, this should be the same NOS as provided in the DOCP and shown in X_000295_DefaultMgmtServerURL.
Device.Time	NTPServer1, NTPServer2, NTPServer3 and NTPServer4	The operator's NTP server addresses. All four parameters should have an NTP server address. If all of them are incorrectly configured, the AP will be unable to set its clock time. Hence it will be unable to validate any certificates and establish an IPsec tunnel.
Device.Security	X_000295_CRLServerBaseUrl	If this is incorrectly configured, the AP will be unable to validate any certificates and establish an IPsec tunnel.
Device.IPsec	Enable	If the AP should use IPsec, this must be checked (enabled). If this is unchecked (disabled) then the AP will not attempt to establish an IPsec tunnel, which means it will be unable to reconnect to the NOS.
Device.IPsec	X_000295_ConfiguredRemoteTrafficSelectors	The list of configured remote end Traffic Selectors for the AP. When using an ACME SecGW, leave these at the default values. In this scenario, if they are configured, the AP may be able to establish an IPsec tunnel, but may then be unable to reconnect to the NOS.
FAPService.{i}.FAPControl.UMTS.Gateway	SecGWServer1	The configured IPsec gateway. If this is incorrect, the AP will be unable to find the SecGW, and hence will be unable to reconnect to the NOS.

To resolve any incorrect provisioned values, correct them in the NOS then perform a factory reset. The AP will reconnect to the NOS using the default factory configuration and then obtain the updated configuration.

4.3.1 E40 Factory Reset

1) Use a thin rod to press and hold the reset button.

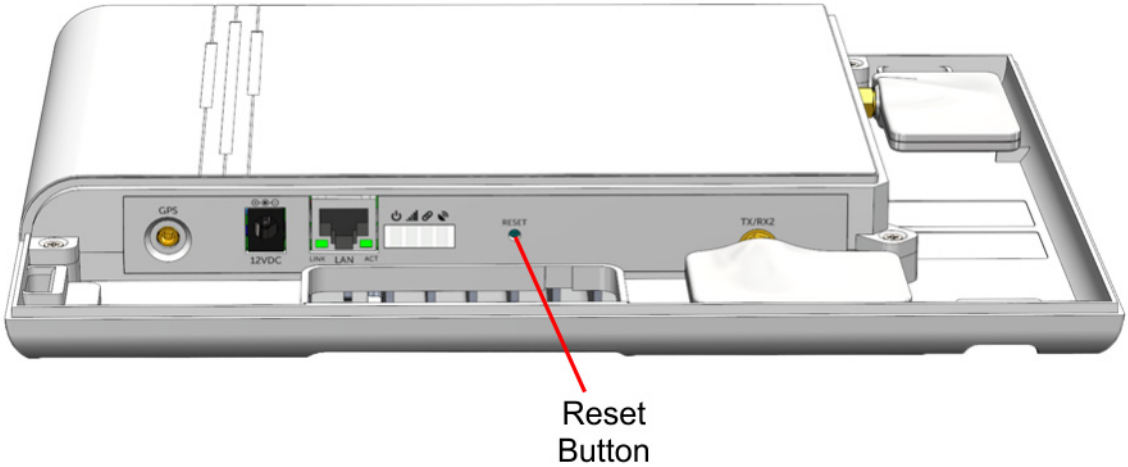

2) Keep the reset button pressed until the Service LED changes from blinking fast (50ms on, 50ms off) to blinking slowly (50ms on, 200ms off).

   The 4G Service LED blinks fast (50ms on, 50ms off) until the factory reset commences, then it blinks slowly (50ms on, 200ms off). When the factory restore process is complete, the LED extinguishes and the AP automatically reboots, takes the fixed IP address for commissioning.

3) See the nanoLTE AP Troubleshooting manual [TRB_43005] for the full AP restart sequence following a factory reset.

5 nanoLTE AP and PSU Regulatory Information

This chapter provides the customer with safety and regulatory warnings, cautions and information for the ip.access Ltd range of products.

- *5.1 Warnings and Cautions*
- *5.2 Hardware Equivalence for 248 and 278 Product Variants*
- *5.3 Regulatory Statements for nanoLTE E40 AP*
- *5.4 Regulatory Statements for PSU*

5.1 Warnings and Cautions

Electrical Safety

	CAUTION The nanoLTE AP is intended for dry indoor applications only. If evidence of condensation is present do not apply power to the nanoLTE AP.
	CAUTION The nanoLTE AP is designed to be operated as a fixed system device and must be located away from the user. It must be mounted in a manner to ensure that all users and bystanders are kept a minimum of 20cm away from the integral antennas at all times.
	WARNING Do not immerse any part of the nanoLTE AP or its power supply in water or any other liquid. Do not install or use the nanoLTE AP or its power supply near open water. Do not spill liquids of any type on the nanoLTE AP or its power supply.
	WARNING Do not use liquid, solvent or aerosol cleaning agents on or near the nanoLTE AP or its power supply.
	CAUTION To avoid the risk of fire and/or electrical shock, do not push objects through openings into the nanoLTE AP or its power supply (except when operating the Reset switch on the nanoLTE AP).
	CAUTION Do not disassemble the nanoLTE AP or its power supply.
	CAUTION The nanoLTE AP must only be powered using the ip.access power supply provided for use with the nanoLTE AP.
	CAUTION Before using the power supply, verify that the mains voltage is within the range specified by the voltage printed on the power supply.
	CAUTION The PSU supplied with the nanoLTE AP must not be used for powering any other equipment.
	CAUTION To avoid the risk of fire and/or electrical shock, do not overload power outlets or extension cables.

	CAUTION When disconnecting the power supply from the mains, pull the plug. Pulling the cable may result in damage to the cable.

Interference with Electronic Devices

	CAUTION If using a pacemaker, ensure you are using the device in accordance with its safety requirements with respect to RF devices. Consult your doctor if you have questions about RF signals and your pacemaker.
	CAUTION If using a hearing aid, RF devices may cause interference.
	CAUTION Unshielded electronic devices should not be used near the nanoLTE AP. Conversely, the nanoLTE AP should not be installed adjacent to unshielded electrical or electronic devices (such as unshielded speakers).

Other Warnings and Cautions

	WARNING Do not install the nanoLTE AP in a position where the power supply cable or network cable may cause a tripping or choking hazard.
	WARNING Do not install the nanoLTE AP or the power supply on an unstable surface. All caution must be observed to prevent the device from falling and causing injury to a person and/or damage to the device.
	WARNING The nanoLTE AP should not be disposed of in household waste bins. Please follow local regulations for disposal of electronic devices.
	CAUTION Do not install the nanoLTE AP in a position where the power supply cable or network cable may be damaged by walking on the cables.
	CAUTION Do not attempt to fit an external antenna or antenna cabling to the nanoLTE AP.

5.2 Hardware Equivalence for 248 and 278 Product Variants

The 248 and 278 product variants have an identical hardware build for each set of supported bands. Hence the hardware build is identical in each of these cases:

- 248J and 278J
- 248L and 278L
- 248M and 278M

The only difference between 248 and 278 variants is that internal fuses within the processor are configured on the 278 variants in order to store unique security information, allowing the product to boot up securely.

Note: To implement the added security, the software/firmware has been adjusted for the 278 variants. Product operation and in particular the RF operation of this variant is not altered in any way. The RF Technology (LTE), frequencies and power level are identical between both variants.

In respect of the 248M and 278M variants of the nanoLTE E40 AP, ip.access has reviewed the Software Changes section of the FCC Permissive Changes Document dated 16th Oct 2015. It has been determined that the difference between these two product models can be classed as a permissive change.

5.3 Regulatory Statements for nanoLTE E40 AP

5.3.1 EU Regulatory Compliance

The nanoLTE AP models 248J, 278J, 248L and 278L conform to the following regulatory standards:

Health (Art 3.1(a)):	EN50385: 2002
Safety (Art 3.1(a)):	EN60950-1: 2006 + A11:2009 + A1:20110+ A12:2011
EMC (Art 3.1(b)):	EN 301 489-23 V1.5.1, EN 301 489-1 V1.9.2
Spectrum (Art 3.2):	EN 301 908-14 V6.2.1

This product is intended for use in all Member States of the European Union.

"Hereby, ip.access Ltd, declares that this nanoLTE 248J, 278J, 248L and 278L are in compliance with the essential requirements and other relevant provisions of Directive 1999/5/EC."

A copy of regulatory compliance documentation may be obtained in writing from "IP Access Ltd, Building 2020, Cambourne Business Park, Cambourne, Cambridge, CB23 6DW, UK".

CE 1595 ⓘ

5.3.2 US FCC Compliance

- FCC CFR47 Parts 15B, 22, 24, 27

Note: Changes or modifications not expressly approved by the party responsible for compliance may void the user's authority to operate this equipment.

Model nanoLTE E40 248M/278M has FCC ID QGGIPA248M (see section 5.2 for information on 248/278 hardware equivalence).

	WARNING This is a class B product. In a domestic environment this product may cause radio interference in which case the user may be required to take adequate measures.

Note: This equipment has been tested and found to comply with the limits for a Class B digital device, pursuant to part 15 of the FCC Rules. These limits are designed to provide reasonable protection against harmful interference in a residential installation. This equipment generates, uses and can radiate radio frequency energy and, if not installed and used in accordance with the instructions, may cause harmful interference to radio communications. However, there is no guarantee that interference will not occur in a particular installation. If this equipment does cause harmful interference to radio or television reception, which can be determined by turning the equipment off and on, the user is encouraged to try to correct the interference by one or more of the following measures:.

- Reorient or relocate the receiving antenna.
- Increase the separation between the equipment and receiver.
- Connect the equipment into an outlet on a circuit different from that to which the receiver is connected.
- Consult the dealer or an experienced radio/TV technician for help.

5.3.3 Safety Standards

- IEC 60950-1:2005 (2nd Edition) and EN 60950-1:2006

5.3.4 Environmental Standards

- ETSI 300 019-2-3
- ETSI 300 019-2-2

5.4 Regulatory Statements for PSU

Safety Approvals	cUL/UL SAA CE C-Tick
Mechanical Characteristics	Length: 82.7mm (3.26in) Width: 55mm (2.17in) Height: 39.1mm (1.54in) Weight: 150g (5.29oz)
PSAA30R Characteristics	
AC Input Voltage Rating	100 to 240V AC
Emissions	FCC Class B
	EN55022 Class B
AC Input Voltage Range	90 to 264V AC
Immunity	IEC61000-4-2 Level 4 IEC61000-4-3 Level 2 IEC61000-4-4 Level 2 IEC61000-4-5 Level 2 IEC61000-4-6 Level 2 IEC61000-4-8 Level 1 IEC61000-4-11 ENC61000-3-2
AC Input Frequency	47 to 63Hz
Input Current	0.8A (RMS) maximum at 120V AC 0.5A (RMS) maximum at 240V AC
Leakage Current	0.25mA maximum
Over-Voltage protection	Auto restart
Inrush Current	<60A for 100V AC at maximum load <100A for 240V AC at maximum load (Cold start at ambient 25C)
Over-Current Protection	Auto-restart without damage
Short-Circuit Protection	Output can be shorted without damage
Input Power Saving	0.3W maximum at no load
Dielectric Withstand (Hi-pot) Test	Input to Output: 3000V AC for 1 min., 10mA
Output Efficiency	>83.5% average efficiency
Insulation Resistance	Input to output: 7M ohm, 500V DC
Environmental Temperature	Operation 0 to +40C Non-operation -25 to +75C Humidity 20 to 90%
DC Output Connector (Barrel Type)	2.1 x 5.5 x 9.5mm Center Positive Standard

AC Input Clips	RPA: US RPB: Brazil RPC: China RPE: Europe RPH: Korea RPI: India RPK: UK RPN: Argentina RPS: Australia RPX: IEC320 C8

5.4.1 Output Specification

Model	DC Output Voltage	Load		Ripple P-P (max)	Regulation Line / Load	Efficiency Level
		Min	Max			
PSAA30R-120	12V	0A	2.50A	120mV	+5%	V