Instruction Manual

KO PROPO®
DIGITAL PROPORTIONAL SYSTEM

KO PROPO®
EX-10 HELI
Instruction Manual

Read First

Thank you for purchasing the EX-10 Helios. Read this manual carefully in order to obtain maximum performance from the unit. Keep this manual handy.

How to find information in this manual

●Please understand the basic uses of "How to use the transmitter".
In addition, please locate the item in the main menu and the function menu to master each function.

●Please see "Feature" pages to find out about the new additional functions.
Here is an explanation of the new functions.

LCD screen and key operation	(P16)
Change menu	(P17)
Indicator and warnings	(P18)
Response mode	(P19)
D.S.C (Direct Servo Control)	(P20)
Multi access port	(P21)
Data pack	(P22)
Trim and sub trim	(P23)
Wheel tension adjustment, phone terminal	(P24)

Notes on application, exportation and modification of the products.

1,These products are only for the control of models.

2,If the products are exported from Japan, the prior approval of the Ministry of Radio/Telecommunications is required regarding the country of destination. If these products are re-exported from other countries, it may be subject to restrictions on such re-export and prior approval of government authorities may be required

3,KO is not responsible for any use of this product that is not in compliance with applicable laws and disclaims all responsibility for any modification or alteration of the product.

Other notes

- It is illegal to reproduce the contents of this manual without permission.
- The contents of this manual are subject to future changes without notice.
- Although every effort has been made to ensure the accuracy of the information contained in this manual, please contact us if you have any questions or if you find any errors.
- We cannot assume any responsibility for any damages arising from the use of

DRAFT

CONTENTS

Read first	03
Contents	04 05
Notes on safe usage	06 07 08

Usage of the transmitter

Names of parts of the transmitter	09
LCD Screen table Main menu	10
LCD Screen table Function menu	11
How to insert batteries and such	12 13
How to use transmitter	14 15

Features

LCD Screen and key operation	16
Change menu	17
Indicator and warnings	18
Response mode	19
D.S.C(Direct Servo Controll)	20
Multi access port	21
Data pack	22
Trim and sub trim	23
Steering tention adjustment,wheel extention,phone terminal	24
Response Mode Compatibility Table	25

Main Menu

Change menu	26
Add menu	26
Delete menu	27
Move menu	27
Power alarm	28
Option menu	28
Format	29
Option menu LCD contrast	29
Option menu Set buzzer Buzzer tone	29
Option menu Set buzzer Alarm buzzer	29
Option menu Set buzzer Custome tone	30
Option menu Back light	31

DRAFT

Function Menu

Model select	32
ET Position auto display	33
Sub trim	34
A.B.S (Acrive Brake System)	35 36
Throttle speed	37 38
Throttle punch	39
Throttle curve	40
Throttle brake	41
Throttle high point	42
Throttle preset	43
Throttle acceleration	44 45
Steering speed	46 47
Steering punch	48
Steering curve	49
Steering balance	50
Steering travel	51
Automatic start	52
Model copy	53
Model name	54
Memory reset (model clear)	55
Adjust volume	56
Channel select	57
Reverse switch	58
Trim rate	59
Set up	60
Up timer	61
Down timer	62
Lap timer	63

Connecting the reaciever 64 65

Notes on installing 66 67 68

Specfications 69

Description 70 71

Index 72 73

Repair 74

Guarantee 75

DRAFT

For the safe Usage of this Unit

With the nature of radio controlled models, misoperation will result in danger. In order to avoid these circumstances and to use this unit safely, please read the contents thoroughly.

Explanation of warnings and signs

Meanings of warning and signs

In this manual, following warnings and signs should be noted carefully.

Danger!	Failure to observe the matter discussed in such an item poses a serious threat of death or severe injury.
Warning!	Failure to observe the matter discussed in such an item poses a possibility of death or severe injury, and a great likelihood of damage to the equipment or property.
Caution!	Failure to observe the matter discussed in such an item poses a possibility of injury or damage to the equipment or property.

Meaning of picture indications

Warning

Prohibited matters	Enforcement matters
Not allowed to do.	Must carry out!

Meaning of picture indications

Warning!	Be certain to use only KO Propo genuine crystal sets (transmitter and receiver). ※Other crystals may vary in frequency, which could lead to misoperation or loss of control.
Warning!	Prevent metal parts in the model (Car, or Boat) from touching caused by vibration.
Warning!	This product is only designed for surface radio control models. Do not use for any other purpose.
Warning!	If a nicad battery pack is used in the transmitter, be sure to charge properly before use. ※If batteries are not fully charged, the model may run out of control.
Warning!	Be sure to connect all equipments correctly. ※If connections are loose, the model may run out of control. ※The vibration may damage the servo and the model may run out of control
Warning!	Be sure to install a receiver with thicker double sided tapes. ※A strong shock or vibration may result in the model running out of control.
Warning!	Do not cut or bundle the aerial wire with other cords. ※It may result in decreasing the sensitivity of a receiver and may result in the model running out of control.
Warning!	When operating each servo, check that there is no unnecessary force on the push rod. ※It may damage the servo or increase the consumption of batteries.
Warning!	Be sure to use grommets and to prevent the servo from touching any metal or carbon plates directly. ※The vibration may damage the servo and the model may run out of control.

DRAFT

Notes Before Installation

Coution

Caution! Be careful not to reverse the polarity of the transmitter and the receiver. Reverse polarity could damage the unit.

Caution! Be sure to use genuine KO Propo products e.g. transmitter, receiver, ESC and other optional parts.
※We cannot assume any responsibility for the use of other companies' products with this unit.

Notes on Driving (Sailing)

Warning

Warning! When turning on the power switch, be sure that the frequency band is available.
※The models using the same frequency will run out of control

Warning! Do not use this unit in thunderstorms.
※There is a possibility of lightning striking the antenna.

Warning! Do not use the transmitter in the rain or in a location where water might get on it.
※The unit may become wet, which causes loss of control.

Warning! Do not run the model in the following places.
①Near to other radio control car circuits. (within 3km)
②Near to people or on the road.
③The surface of the water where there are actual sized boats.
④Near to electric wires and communication facilities.
※In the case of the model running out of control, it will be very dengerous.

Warning! Do not run the model when you experience difficulties in concentration through tiredness, alcohol or medication.
※The mis-judgement may result in accidents.

Warning! Be sure to extend the aerial of the transmitter to full length.
※The emission of incorrect signals will cause the model to run out of control.

Warning! Do not allow any plastic parts to come in contact with fuel and exhaution.
※Doing so causes risk of damage.

Warning! Be sure to confirm that the model memory is matched to the models currently running.
※Not doing so may cause the model to run out of control.

Warning! When you make fanctional changes, be sure to stop the engine or disconnect the motor lead wire.

Coution

Caution! Always turn on the switch on the transmitter first, followed by the receiver. When turning off the switch, always turn off the receiver first, followed by the transmitter.
※If you don't follow the correct order, the receiver may get interference and

Caution! Attach a band plate when you operate the unit.
※Display your frequency clearly to other people.

Caution! Do not touch the engine, motor, ESC where heat is generated.
※May result in burning.

Caution! Because the transmitter emits high-frequency energy, do not touch the antenna while the transmitter is in use.

DRAFT

Notes on Driving (sailing)

Warning

Warning! In the case of an electric-powered car, be sure to disconnect the nicad battery afterwards.
※It may cause fire or the model to run out of control in case of the switch being left on.

Warning! When storing the transmitter, batteries, and models, be sure to keep them out of the reach of children.
※It may result in damage by chemicals.

Coution

Caution! Be sure to disconnect the battery from the transmitter when not in use for a long time.
※It may damage the transmitter if you leave the battery in the transmitter for a long time.

Caution! Do not store the transmitter in the following places.
① Extremely hot or cold places (+40℃, -10℃,).
② Direct sunshine.
③ Places with high humidity.
④ Dusty places.
※If you store the unit under these circumstances, it may result in misoperation or damage to the unit.

Notes on Charging Nicad Battery and Hydropack (sold separately)

Danger

Danger! Do not short the battery terminals.
※It is dangerous because it may cause the outbreak of fire or explosion.

Danger! Never incinerate the batteries.
※It is very dangerous because they may explode.

Danger! Be sure to use KO Propo charger and to use correct charging current. (1A)
※Avoid over charging the battery. Over charging does not only damage the battery, but can cause excess heat build-up and possibly fire, which results in serious accidents.
※There is a possibility that the auto cut-off function will fail to operate by other company's chargers.

In the case of liquid leaking from battery, Avoid eye/skin contact with the liquid. Burns and blindness may occur. Apply large amounts of water and contact a doctor immediately for treatment.

Danger! Do not apply a big shock to the batteries.
※It may damage the battery and result in short circuits and possibly a fire.

Danger! Do not dismantle or modify the battery.
※Dismantling the battery may cause liquid to leak out and it is very dangerous

Danger! Do not wet batteries and do not charge wet batteries.
※It may cause excess heat build-up and damage..

Nicad batteries are recyclable.
Please support recycling.

DRAFT

EX-10 HELIOS
PROFESSIONAL CONTROLLER

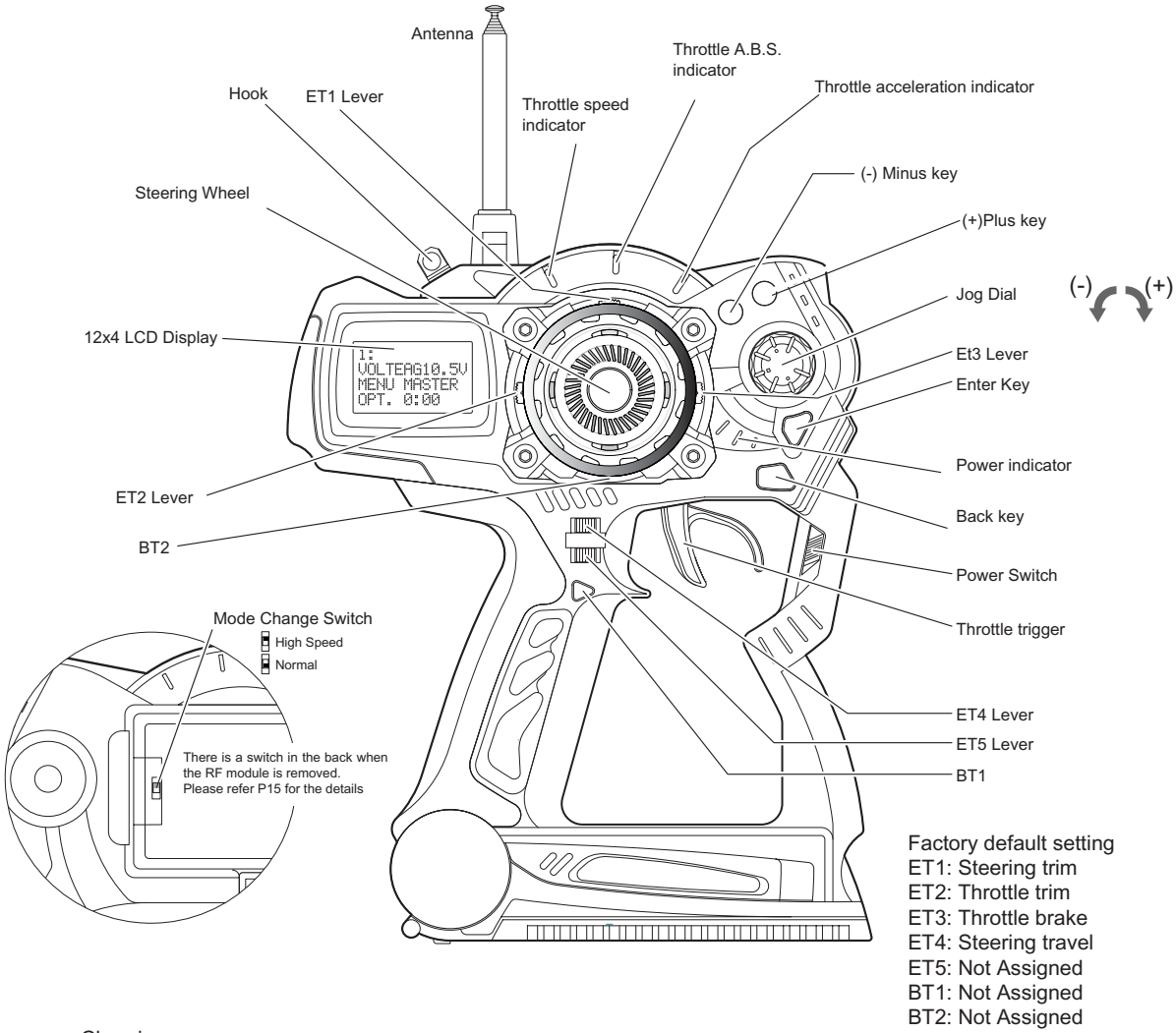

Factory default setting
ET1: Steering trim
ET2: Throttle trim
ET3: Throttle brake
ET4: Steering travel
ET5: Not Assigned
BT1: Not Assigned
BT2: Not Assigned

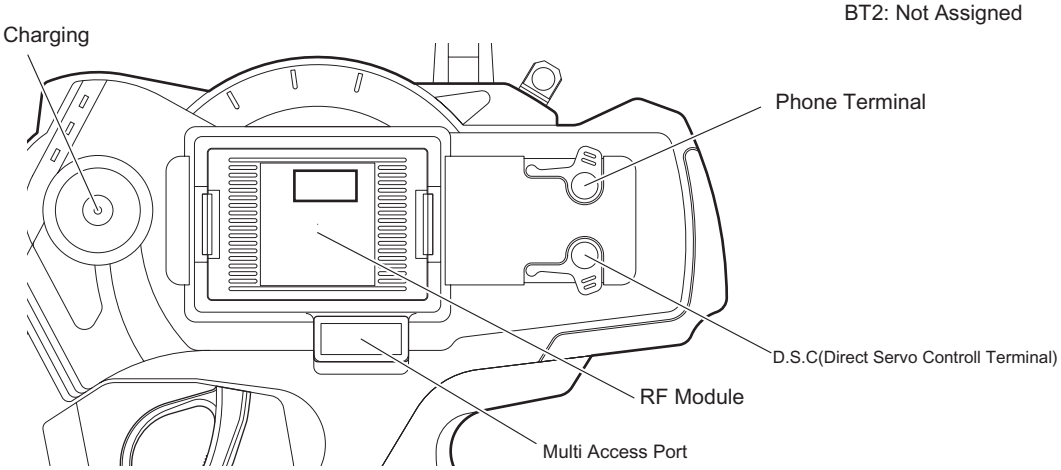

DRAFT

These screens are displayed when the main menu is opened.

Please see each reference page about a detailed operation method after each screen is opened.

Initial screen

```
1:
VOLTAGE10.8V
MENU MASTER
OPT 00:00
```

ENTER

Change menu

```
MENU
>MASTER
 CUSTOM1
 CUSTOM2
```

P17
P26

Add menu

```
MENU
>INS
 DEL
 MOVE
```

P26

Delete menu

```
MENU
 INS
>DEL
 MOVE
```

P27

Move menu

```
MENU
 INS
 DEL
>MOVE
```

P27

JOG

Power alarm

```
MENU
>POWER ALARM
 OPTION
```

P28

Option menu*

```
MENU
 POWER ALARM
>OPTION
```

P29

ENTER

Format (note)

```
MENU
 POWER ALARM
 OPTION
>FORMAT
```

P28

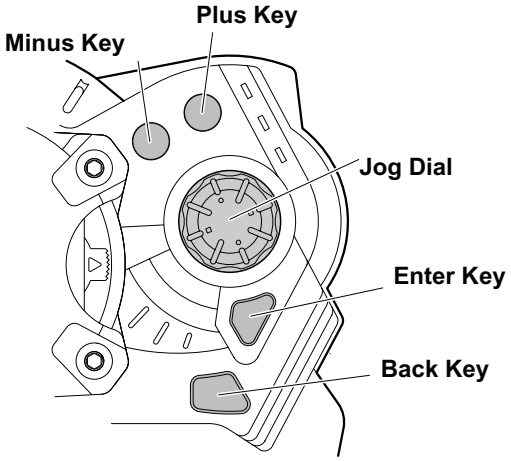

The menu is displayed when 'Enter' is pressed from the initial screen.
The following 11 kinds of settings can be done in the main menu.

- Change Menu
- Add Menu
- Delete Menu
- Move Menu
- Power Alarm
- Option Menu: LCD Contrast
- Option Menu: Buzzer Set: Buzzer Tone
- Option Menu: Buzzer Set: Alarm Buzzer
- Option Menu: Buzzer Set: Custom Tone
- Option Menu: Back Light Setting
- Format (note)

Use Jog Dial or (+) (-) keys to change each screen.
Press 'Enter' key to open each setting screen.

*
Option Menu:
LCD Contrast

```
OPTION MENU
>CONTRAST
 BUZZER
 BACK LIGHT
```

P29

Buzzer Set **

```
OPTION MENU
 CONTRAST
>BUZZER
 BACK LIGHT
```

P29

JOG

Back Light

```
OPTION MENU
 CONTRAST
 BUZZER
>BACK LIGHT
```

P30

ENTER

**
Option Menu: Buzzer Set:
Buzzer Tone

```
BUZZER
>BUZZER TONE
 ALRM BUZZER
 CUSTOM TONE
```

P29

JOG

Alarm Buzzer Set

```
BUZZER
 BUZZER TONE
>ALRM BUZZER
 CUSTOM TONE
```

P29

Custom Tone Editor

```
BUZZER
 BUZZER TONE
 ALRM BUZZER
>CUSTOM TONE
```

P31

Option Menu divides into three items when it is opened.
In addition, an item is divided into the buzzer settings.

(note) This format is displayed only when the Data Pack is installed.

DRAFT

These screens are displayed when the function menu is opened.

Please see each reference page about a detailed operation method, after each screen is opened

The function menu opens when Jog Dial or (+), (-) keys are operated from an initial screen.
28 kinds of the right are all function menus.

＊All of 28 function menu will be displayed when Master is been set for the menu.
In Custom 1 and Custom 2, only the set content is displayed.
To display all, please refer Change Menu (P17 P26) and return display menu to the Master.

advice **Can not return to initial screen.**

●It returns to an initial screen if it keeps pushing the backing key from any screen is displayed.

Having assumed that the function name is chosen from the display of the list of the function menu with Jog Dial, and 'Enter' is done opens and respect opens.
The following screen will be opened when function name is chosen by Jog Dial or (+), (-) keys then Enter is been pressed.

>MODEL SELCT	**Model Select**
ET:POSITION	**ET Position**
SUB:TRIM	**Sub Trim**
ABS	**A.B.S**
TH:SPEED	**Throttle Speed**
TH:PUNCH	**Throttle Punch**
TH:CURVE	**Throttle Curve**
TH:BRAKE	**Throttle Brake**
TH:HIPOINT	**Throttle High Point**
TH:PRESET	**Throttle Pre Set**
TH:ACCEL	**Throttle Acceleration**
ST:SPEED	**Steering Speed**
ST:PUNCH	**Steering Punch**
ST:CURVE	**Steering Curve**
ST:BALANCE	**Steering Balance**
ST:TRAVEL	**Steering Travel**
AUTO:START	**Automatic Start**
MODEL.COPY	**Model Copy**
MODEL.NAME	**Model Name**
MEM.RESET	**Memory Reset**
ADJUST VR	**Adjust Volume**
CH.SELECT	**Channel Select**
REVERSE	**Reverse Switch**
TRIM RATE	**Trim Rate**
SET UP	**Select Up**
UP TIMER	**Up Timer**
DOWN TIMER	**Down Timer**
LAP TIMER	**Lap Timer**

Model Select
```
MODEL SELCT
1>
2:
3:
```
P32

Throttle Brake
```
TH:BRAKE
        B 100
```
P41

Steering Balance
```
ST:BALANCE
 LEFT     70%
 RIGHT    70%
```
P50

Channel Select
```
CH.SELECT
>SELECT  2CH
```
P57

ET Position
```
ET1:ST TRIM
           0
ET2:TH TRIM
           0
```
P33

Throttle High Point
```
TH:HIPOINT
        F 100
```
P42

Steering Travel
```
ST:TRAVEL
          100
```
P51

Reverse Switch
```
REVERSE
>ST    REVERS
 TH    REVERS
```
P58

Sub Trim
```
SUB:TRIM
>ST         0
 TH         0
```
P34

Throttle Preset
```
TH:PRESET
>ET1-ST TRIM
 ET2-TH TRIM
 ET3-BRAKE
```
P43

Automatic Start
```
AUTO:START
>START    OFF
```
P52

Trim Rate
```
TRIM.RATE
>ST TRIM  10
 TH TRIM  10
```
P59

A.B.S
```
ABS
>WIDTH      0
 POS    B  60
 CYCLE     98
```
P35/36

Throttle Acceleration
```
TH:ACCEL
>WIDTH      0
 POS.LOW    5
 POS.HIGH  50
```
P44/45

Model Copy
```
MODEL.COPY
 COPY TO  2
```
P53

Set Up
```
SET UP
>ET1-ST TRIM
 ET2-TH TRIM
 ET3-BRAKE
```
P60

Throttle Speed
```
TH:SPEED
>SPEED
 POSITION
 MODE
```
P37/38

Steering Speed
```
ST:SPEED
>SPEED
 POSITION
 MODE
```
P46/47

Model Name
```
MODEL.NAME

1:_
```
P54

Up Timer
```
UP TIMER
>ET1-ST TRIM
 ET2-TH TRIM
 ET3-BRAKE
```
P61

Throttle Punch
```
TH:PUNCH
>F         0%
 B         0%
```
P39

Steering Punch
```
ST:PUNCH
           0%
```
P48

Memory Reset
```
MEMORY RESET
>NO
 YES
```
P55

Down Timer
```
DOWN TIMER
>ET1-ST TRIM
 ET2-TH TRIM
 ET3-BRAKE
```
P62

Throttle Curve
```
TH:CURVE
>F         0%
 B         0%
```
P40

Steering Curve
```
ST:CURVE
           0%
```
P49

Adjust Volume
```
ADJUST VR
>NO
 YES
```
P56

Lap Timer
```
LAP TIMER
>ET1-ST TRIM
 ET2-TH TRIM
 ET3 BRAKE
```
P63

DRAFT

How To Insert Batteries 1

How to open the cover.

(1)It moves it in the direction of the arrow of ①.
while pushing the part of the arrow of ②.

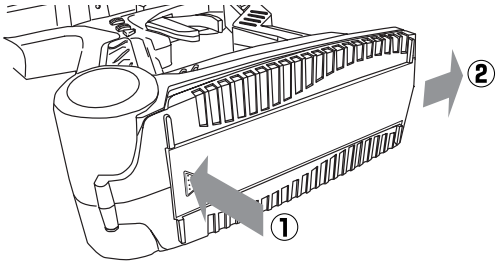

How to insert batteries. (option)

(1)The direction is matched to the display of the plus or minus of the dry battery box, and eight AA size batteries are put.
(2)The direction of the terminal of the dry battery box and the terminal of the transmitter is matched and it pushes it into the interior.
(3)The battery cover is closed

⚠ Warning! ⚠

Do not use AA size Ni-cd or NiMH batteries.
The inside of the transmitter corrodes by generating the gas when charging it.

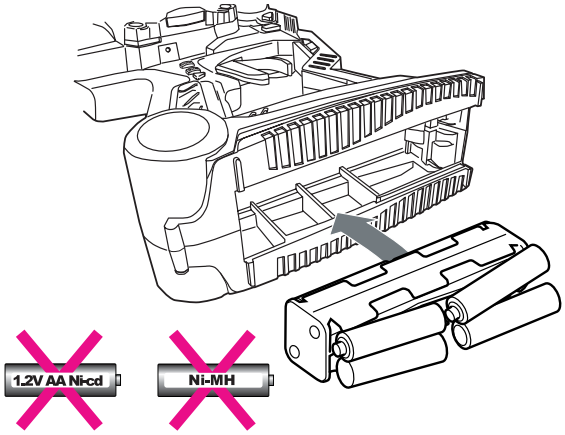

How to insert battery pack (option)

(1)The connector is inserted noting the direction as shown in figure.
(2)Insert battery pack and close the cover.
(3)Be careful not to trap the cord.

Please attach included sponge to the battery lid when the battery pack is used.

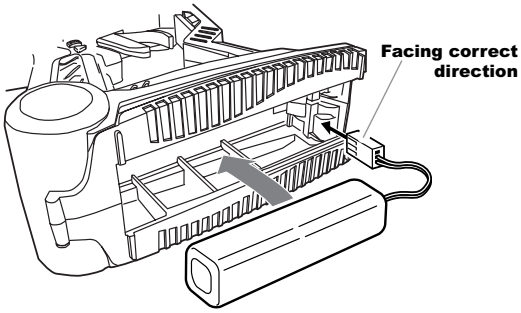

About Charging (only for battery packs)

Connect AC Mains charger or DC 12V charger (KO Propo products) as shown in figure.

The charging time from flat condition is 14-16 hrs for AC Mains charger.

⚠ Warning! ⚠

Do not charge when dry cell batteries are used.
The transmitter is damaged due to the liquid leakage and the explosion when charging it.

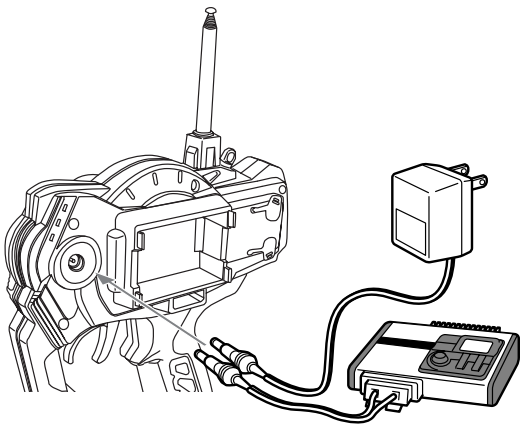

DRAFT

About Discharging Battery Pack

●Please note the battery pack can not be discharged using charging jack.
●Please remove battery pack from main unit for discharging.

Color Pad and Replace Grip

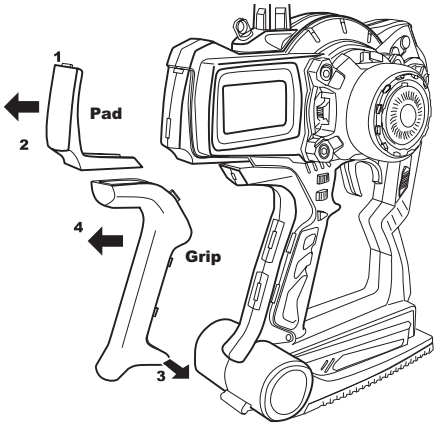

How to remove pad or grip.
After it pulls it in the direction of an arrow lower (2), the pad removes fingernail (1)
After expanding lower side (3) outside, the grip pulls the whole in direction (4) of the arrow.

How to attach pad or grip.
It does in the reverse order of the removing procedure. The lower side is done in the slide after the fingernail of (1) is previously encased of the pad, and it pushes it.
The grip does the whole in the slide and pushes the fingernail on the side in six places in pushing total into the case. If it is not easy to enter, it pushes it by a minus driver etc. noting that the case is not damaged.
Finally, push the guide pin that exists in the part of the arrow of (3) into the case.

Changing the RF Module and Crystals

●Change the RF Module for changing the frequency range.
●Change the crystals for changing the frequency. (band)
●Be sure to turn off the switch when you change the RF Module or crystals.
●Insert the crystal properly.

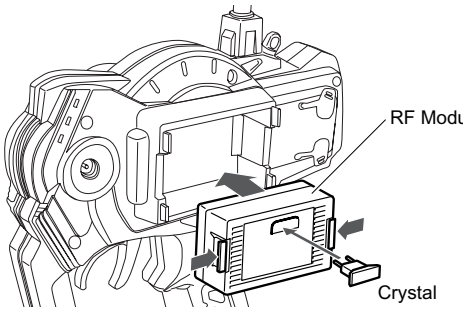

Warning!

When changing the crystals, be sure to use genuine FM-type transceiver crystals from KO Propo. Crystals from other manufacturers may operate at slightly different frequencies, resulting in loss of control.

Caution!

Only the RF Module for EX-10 Helios can be used.

DRAFT

How to Use Transmitter-1

Preparation

Insert dry cells or battery pack into the transmitter (P12)
※Be sure to charge battery pack before use.

advice

The battery will last long if crystal is pulled out or the RF module is detached when only the transmitter is operated. Moreover, when only the transmitter is operated when the management of the band is done in the course etc. , it is similar. (Please refer P20 D.S.C page)

Switching the Power On

A blue power indicator at the right of the main body lights when the power of the transmitter is on and the LCD display is displayed with the start sound.

Changing the display or settings.

In case of LCD contrast is too blight or too dark.

Open the main menu and then open the CONTRAST from OPTION to adjust. Reference page P29

Changing the setting of the backlight of the LCD.

(The backlight is [Auto] at factory default.)
Open the main menu and then open the BACK LIGHT from OPTION to set up. Reference page P28 P31

Want to change pitch of the buzzer beep or change the melody.

Open the main menu and then open the BUZZER from OPTION to set up. Reference page P29 P30

Change settings of operations.

Change operation mode of response.

Use Mode Switch (detach RF module from main body) and CH.SELECT of function menu (P57). Reference page P19

Change function assignment of ET lever or BT button.

Open the function menu and perform SET UP. Reference page P60

The buzzer sounds if it doesn't operate it for a long time. I want to change this setting.

Change the setting of POWER ALARM of the main menu. At shipment from factory the alarm will sounds when the unit does not operate for more than 3 minutes. Reference page P28

Change the menu list of initial screen that it is displayed when Jog Dial or (+), (-) keys are operated.

Other than MASTWER, it can be changed to CUSTOM 1 or CUSTOM 2 which you can change display items by yourself. Reference page P17

DRAFT

Operation concerning memory.

Reset a specific model memory to factory default setting.

Select MEM.RESET from function menu and press enter. (Current model memory will be initialized.)

Reference page P55

Transferring model memory setting to other model memory.

Select MODEL.COPY from function menu and press enter.

Reference page P53

Please execute the format in the main menu when you use the Data Pack.

The format appears to the menu only when the data packing is installed.

Reference page P22

Use the optional feature.

I want to set it up without emitting signals from the transmitter.

DSC function can be used connecting DSC cable (option) to the DSC port.(D.S.C=Direct Servo Controller)
It comes to be able to operate it by the power supply's entering by inserting DSC Jack in the DSC port.

Reference page P20

Want to list many functions for set up.
Want to record more than 25 setting up data.
Want to edit custom tone by the PC.

If you use the interface adaptor and the PC interface for MAP Multi Access Port (optional) Most settings of the main unit of the transmitter can be done with PC, and the setting of the transmitter side be preserved in PC.

Reference page P21

DRAFT

n this machine, assume most settings to be an operation system thirdly, that is, Jogdial and the "Enter", "Back" key possible to enable an intuitive operation.
Moreover, the change menu system that can efficiently use it with more set screen is newly adopted.

Name of key

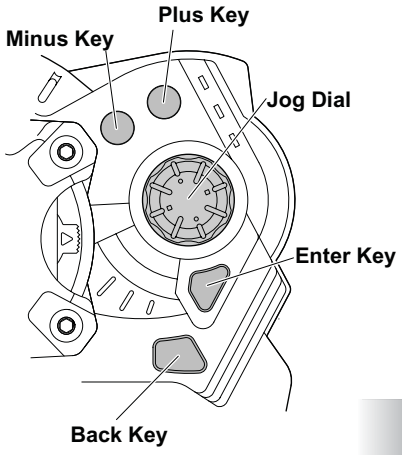

Names on Initial Screen

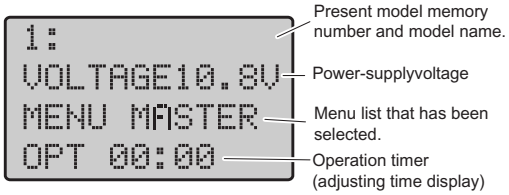

Each keys can be operated by pressing. Jog Dial can be operated by rotating left or right.

From an initial screen

Enter key: The main menu opens when "Enter" is pushed.
Back key: Nothing happens.
+.- keys: The function menu will open.
Jogdaial: The function menu will open.
Press +.- keys together: Reset Operation timer

A key function, besides an initial display

Enter key: It is a key that mainly to select and to decide.
Back key: Mainly, use it when it cancel or it returns to the previous screen.
+.- keys: Use it to increase or decrease a movement and the set value(figure)
Jog Dial: Can be used like +.- keys but a quick operation can be done
Press +.- keys together: Reset a value of settings. (however it is not for all functions)

Main menu

- **It is a menu that opens when "Enter" is pushed from an initial screen.**
- **Mainly, the setting related to the system can be set. The content set by this menu is not independent in each model memory.**

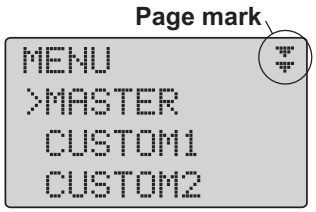

∗ About Page mark

There is a content of the display below.
There is a content of the display above.
There is a content of the display above and below.

It is likely to be displayed not only in main menu but in function menu.

Function menu

- **This is a menu that opens when Jog Dial or +.- keys is operated from Initial Screen.The position that opened last time is memorized while the power supply has been turned on.**
- **Set an independent content for each model memory. Although there are lots of functions, the displayed function is customizable by the menu list switch (Page 17). (Change Menu System)**

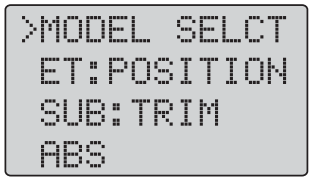

DRAFT

In this unit, to use a lot of functions, Change Menu System is developed, and installed newly. This is the one that it is made to be able to do by quickly calling practicing more operation by switching Menu List that registers only the function to often use.

About Change Menu

By registering the content squeezed to CUSTOM1 or CUSTOM2 from a lot of function menu items, the switch is ..function item.. quick and it is made to be able to do.
For instance, CUSTOM1 is a lot of items used for the practice CUSTOM2 registers the item for the race.

●The switch of the item used can be easily made by three actions. (Enter, Jog, Enter)
●If Master is used, all items are displayed.
●Unregistered items functions are also effective. (Just not displayed)

Change Menu Procedure

It is an explanation of the procedure for switching actually.
Select the menu that you want to display in the main menu.

1 Press the enter key from the initial screen to display main menu.

MASTER is using

```
1:
VOLTAGE10.8V
MENU MASTER
OPT 00:00
```

ENTER

2 Following three menu items MASTER, CUSTOM1 and CUSTOME2 will be displayed at the first screen of main menu. Select the items you want to use by Jog Dial or +.- keys then press enter.

```
MENU
 MASTER
>CUSTOM1
 CUSTOM2
```

JOG

ENTER

3 The screen returns to an initial screen, the name of function menu is been changed to the name that selected.

Changed to CUSTOME1

```
1:
VOLTAGE10.8V
MENU CUSTOM1
OPT 00:00
```

In the example of the display, it switches from MASTER to CUSTOM1.

Please see main menu P26 about detailed operation methods such as the item additions and editing each menu.

advice **Can not return to initial screen.**

●Whatever the display screen is, it returns to an initial screen if you keep pressing back key.

advice **Can not select CUTOM2!**

●CUSTM2 can not be selected at factory default settings because there is no items are registered. I can be used if you register or add items in the menu contents. (Add menu P26)

DRAFT

Indicator warning

About the display of each indicator.

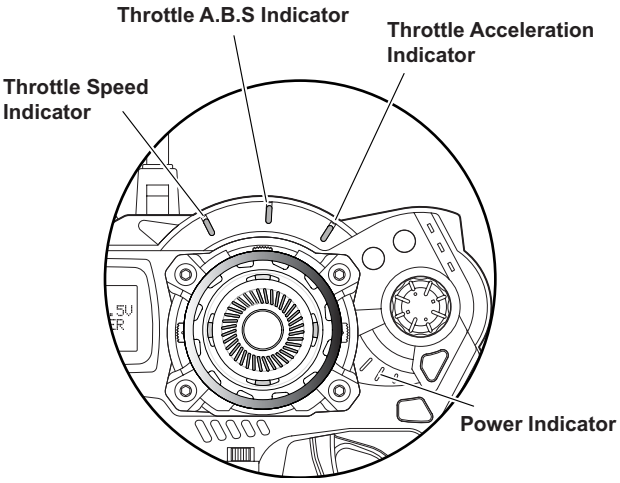

Because three indicators other than the power indicator flashes regardless of a set value when it is turned on with ET and the button, it is not limited that the function works.

Throttle Speed Indicator

When Throttle Speed (P37) is effective, it flashes. Moreover, the function of On/Off of Throttle Speed is allocated in ET and the button, it flashes too.

Throttle A.B.S. Indicator

When Throttle A.B.S (P35 36) is effective, it flashes. Moreover, the function of On/Off of the Throttle A.B.S. is allocated in ET and the button, it flashes too.

Throttle Acceleration

When Throttle Acceleration (P44) is effective, it flashes. Moreover, the function of On/Off of the Throttle Acceleration is allocated in ET and the button, it flashes too.

Power Indicator

When the power is turned on, it lights.And
It flashes when the voltage drops below 9V.
(battery alarm)

Warning Display

Battery Alarm

This is displayed when the power supply voltage drops about 9V or less.

```
BATTERY
     ALARM
         9.0V
```

The character of the BATTERY ALARM flashes. The power indicator flashes. The alarm buzzer sounds. And the backlight is compulsorily turned off. VOLTAGE of LCD keeps flashes though it returns to an initial screen for any key operation.

```
1:
VOLTAGE10.8V
MENU MASTER
OPT 00:00
```

After it returns to an initial screen, Flashing VOLTAGE and Flashing power indicator are released if the voltage is more than the warning voltage for one minute.

Data Pack Error

It is displayed when there is something wrong with the Data Pack while using it.

```
DATA PACK
  ERROR !!
```

DATA PACK ERROR!! flashes.
After any key is operated, Model 0 is displayed.

```
0:
VOLTAGE10.8V
MENU MASTER
OPT 00:00
```

Please see model selection (P32) about the display of model memory 0.

Memory Error

When malfunction happens to the access of the memory, it is displayed.

```
MEMORY
     ERROR
```

MEMORY ERROR!! flashes.
After any key is operated, model memory (model memory 1) will operate at initial condition.
If the power is turned on again and it is normal, it operates by an original setting.

```
1:
VOLTAGE10.8V
MENU MASTER
OPT 00:00
```

If this message does appear frequently, send the transmitter to our service department for repairs.

Power Alarm

The alarm sounds when time that nothing is operated exceeds set time.

It will set it in three minutes at factory setting.
The time can be set at Main Menu: Power Alarm (P28)
The sound of alarm can be set at Main Menu: Option: Buzzer (P29)

DRAFT

This Unit can select from 3 mode. to change the mode adjust the switch below of the RF module. and adjust the channel select in function mode.

1

2 Super HSR High Speed Response

3 Advanced HSR High Speed Response

DRAFT

1

2

3

4

DRAFT

DRAFT

1

2

3

1

2

DRAFT

1

2

3

DRAFT

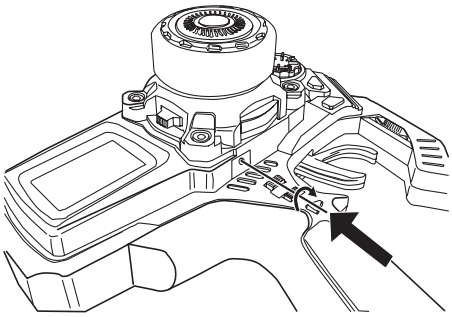

DRAFT

Response Mode Compatibility Table

● Compatible
X Incompatible

	Normal	Super High Speed	Advanced High Speed
Receiver			
KR-297FZ(Discontinued)	●	X	X
KR-301F	●	●	X
KR-302F	●	●	●
Analog Servo			
PS-401	●	X	X
PS-712FET	●	X	X
PS-713FET	●	X	X
PS-2173FET	●	●	X
PS-2174FET	●	●	X
PS-2113FET	●	●	X
Digital Servo			
PDS-947FET	●	●	●
PDS-2123FET	●	●	●
PDS-2143FET	●	●	●
PDS-2144FET	●	●	●
PDS-2343FET	●	●	●
PDS-2344FET	●	●	●
ESC			
EZ-1000	●	●	●
KSC-1000FR	●	●	●
KSC-1100FR	●	●	●
KSC-1200F	●	●	●
VFS-2000	●	●	●
VFS-2000J	●	●	●
Others			
Fail Safe Adapter(FSA-1)	●	●	X

DRAFT

Main menu (1)

Back Key
Enter Key
JogDial
+/- Key
Reset

It is the menu displayed when "Enter" is pushed from the initial screen.

MAIN-MENU

Change menu system

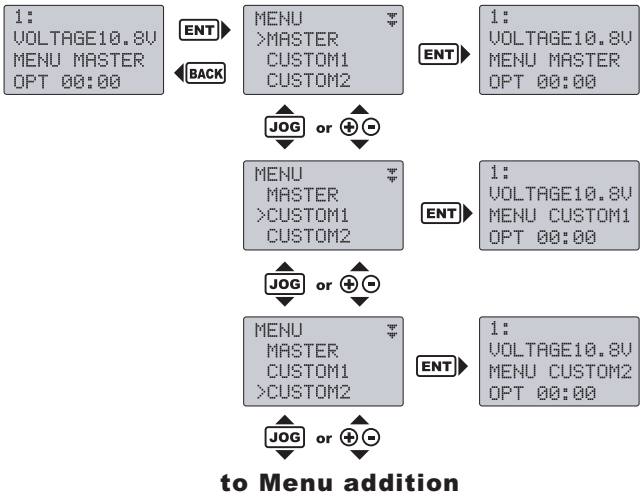

to Menu addition

The first screen of the main menu becomes a selection of the change menu system.
Displayed MASTER, CUSTOM1, and CUSTOM2 are name of the menu screen respectively.

It is selected by pushing "Enter" after it moves to the menu name you want to select the cursor with Jogdial or the +.- keys, and the display returns to an initial menu.

The menu is not changed when returning to an initial screen by pushing the back key.

＊The menu name does the blinking display if not registered in each menu at all and it is not possible to select it.
＊In the state of the first stage, as for CUSTOM1, only MODEL.SELECT is registered.
＊In the state of the first stage, CUSTOM2 is empty.(It is not possible to select it.)

MAIN-MENU

Menu addition

Add the item to the menu list.
It is possible to add it to CUSTOM1 and CUSTOM2.(It is not possible to add it to MASTER.)

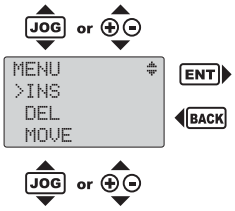

1 Menu name selection

Select the added menu name. Move the cursor to either of CUSTOM1, CUSTOM2 with Jogdial or the the +,- key and push "Enter".

```
MENU INSERT
>CUSTOM1
 CUSTOM2
```

Selected CUSTOM1

2 Function name selectin

The function name that wants to be added and push "Enter"..

```
CUSTOM1 INS
>SUB:TRIM
 MODEL SELCT
 ET:POSITION
```

Selected SUB:TRIM

The added function name is a list of the right. however, the one registered in the menu list is not displayed

MODEL SELCT	TH:HIPOINT	AUTO:START	SET UP
ET:POSITION	TH:PRESET	MODEL.COPY	UP TIMER
SUB:TRIM	TH:ACCEL	MODEL.NAME	DOWN TIMER
ABS	ST:SPEED	MEM.RESET	LAP TIMER
TH:SPEED	ST:PUNCH	ADJUST VR	
TH:PUNCH	ST:CURVE	CH.SELECT	
TH:CURVE	ST:BALANCE	REVERSE	
TH:BRAKE	ST:TRAVEL	TRIM RATE	

3 Additional position

Decide the position where the function selection with Jogdial or the +, - key is inserted and push "Enter". Insertion is fixed, and the screen returns to the selection of the function name of two.

```
CUSTOM1 INS
 ET:POSITION
⇕SUB:TRIM
 MODEL SELCT
```

SUB:TRIM has been selected on this screen. It tries to insert SUB:TRIM after ET:POSITION on this screen.

It becomes the order.
(Displayed on the right)

```
MODEL SELCT
ET:POSITION
SUB:TRIM
```

It is possible to add it continuously by repeat. Push the "Back" key when stopping it.(Or, jump to an initial screen at dash when the "Back" key and "Enter" are pushed at the same time.)

DRAFT