Hardware Integrator's Guide

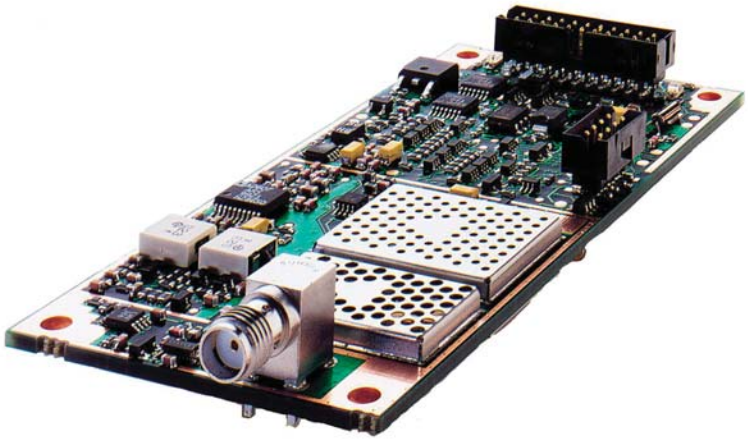

CreataLink™ 2 XT
ReFLEX 25 and 50 Technologies

Foreword

Customer Information

The information in this manual has been reviewed for accuracy. However, no responsibility is assumed for inaccuracies. SmartSynch, Inc., reserves the right to make changes to any products discussed herein. The information in this document is subject to change without notice. SmartSynch, Inc. assumes no liability for hardware or software damage or loss of data due to errors or omissions in this manual. SmartSynch, Inc. does not assume any liability arising from the application or use of any products or circuits described herein. Neither does SmartSynch, Inc. convey any license under its patents or right of others.

For technical support and questions concerning the CreataLink2 XT and documentation, refer to our web site at ***www.smartsynch.com***.

Computer Software Copyrights

The SmartSynch products described in this manual include copyrighted SmartSynch computer software stored in semiconductor memories and other media. Laws in the United States and other countries preserve for SmartSynch, Inc. certain exclusive rights for copyrighted computer programs, including the exclusive right to copy or reproduce in any form the copyrighted computer software.

Accordingly, any copyrighted SmartSynch computer software contained in the SmartSynch products described in this manual cannot be copied or reproduced in any manner without the express written permission of SmartSynch, Inc..

Furthermore, the purchase of SmartSynch products does not grant, either directly or by implication, estoppel, or otherwise, any license under the copyrights, patents or patent applications of SmartSynch, Inc., except for the normal, non-exclusive, royalty-free license to use that arises by operation of law in the sale of a product.

Portions of the software described in this manual are copyrighted by Motorola, Inc.

Trademarks

CreataLink®2 XT is a registered trademark of SmartSynch, Inc.

Motorola, the stylized M logo, CLP™, FLEX™, FLEXsuite™, and ReFLEX™ are trademarks or registered trademarks of Motorola, Inc.

Microsoft®, Windows®, and Windows NT® are registered trademarks of Microsoft Corporation.

Solaris™ is a trademark of Sun Microsystems Inc.

UNIX® is a registered trademark of X/Open Company Ltd.

Important Safety Information

The installation, maintenance, and/or operation of this equipment could present potentially unsafe conditions, including, but not limited to, electrical shock, improper voltage to components. Improper operation could cause personal injury, death or damage to property.

Read Instructions

Read all safety instructions before you operate the Data Transceiver or maintenance equipment. Retain these safety instructions for future reference. Specialized procedures and instructions are required and must be followed. All applicable safety procedures, such as Occupational, Safety, and Health Administration (OSHA) requirements, National Electric Code Requirements, local code requirements, safe working practices and good judgement must be used by personnel.

Heed Admonitions

Adhere to all warnings on the equipment and in the operating instructions. Follow all operating and usage instructions. The following two safety admonitions are used in this manual:

Caution: Emphasizes information about actions which could result in equipment damage.

Warning: Emphasizes information about actions which could result in personal injury.

Mounting

Mount the equipment only as recommended by the manufacturer. Situate the equipment away from heat sources such as radiators, heat registers, stoves, or other equipment (including amplifiers) that produces heat.

Power Sources and Grounding

Connect the equipment to the type of power source described in the installation instructions, or as marked on the equipment. Do not defeat the grounding or polarization provisions of the equipment. Turn the circuit breaker off when equipment is to be left unused for long periods of time.

Damage Requiring Service

Do not attempt to perform service functions that are not described in the operating instructions. Refer all such servicing to qualified service personnel.

Motorola, Inc. is not responsible for static damage to equipment not sold under the Motorola logo.

FCC Compliance Statement

This product generates, uses and can radiate radio frequency (RF). If it is not installed and used in accordance with the instruction manual, it can cause harmful interference to radio communications. It has been tested and complies with the limits for a Class B digital device, pursuant to Part 15 of the Federal Communications Commission (FCC) code of federal regulations, which are designed to provide reasonable protection against harmful interference in a residential installation. However, there is no guarantee that interference will not occur in a particular installation. If this equipment causes harmful interference to radio or television reception, the user should try and correct the interference by one or more of the following measures:

Reorient or relocate the receiving/transmitting antenna.

Increase the separation between the equipment and the CreataLink2 XT device.

Connect the equipment into an outlet on a circuit different from that to which the CreataLink2 XT device is connected.

Interference must be corrected at the user's expense. Consult the dealer or an experienced radio/TV technician for help.

Smart Synch™

GENERAL

Contents

About this Document **2-1**
Audience 2-1
Conventions 2-1
Related Publications **2-2**
Product Description **2-3**
Architecture 2-4
Components 2-4
Features **2-5**
Specifications **2-6**
Environmental Constraints 2-7
Power Requirements 2-8
Connectors Description 2-11
Accessories 2-13
Typical Configurations 2-14
Air Interface **2-16**
Air Interface Protocol 2-16
ReFLEX Network Operation 2-17
Product Functionality **2-18**
Operating System 2-18
Power-up Operating Mode 2-18
Message-Search Operating Mode 2-18
Address Capability 2-19
Duplicate Message Detection 2-19
Message Deletion 2-19
Unit IDs 2-19
Message Storage and Lengths 2-20
Acknowledgment of Received Messages 2-21
Registration Request 2-21
Configuration Parameters 2-21
PPS Utility 2-21
End-User Application Software 2-22
Serial Interface 2-22

About this Document

This document summarizes the product features and describes how to install and integrate the CreataLink2 XT data transceiver into an off-board application. If you are developing an on-board/embedded application, use the Software Integrator's Guide listed in the Related Publications Section in conjunction with this manual.

This document is organized in sections as follows:

- Section 1: Foreword - A brief introduction to this document, licensing information, safety guidelines, and a general description of the data transceiver.
- Section 2: General - Information about this document, references, installation instructions, troubleshooting tips and product features.
- Section 3: The Integration Overview - Integration (interface) overview.
- Section 4: Hardware Integration - The development environment, accessories, and options.
- Section 5: Testing - installation, troubleshooting, and diagnostic mode.
- Section 6: Parts information - Part numbers and ordering information.
- Appendix A: Abbreviations and Acronyms
- Appendix B: Desense - A discussion of desense, EMI testing procedures, and EMI control.
- Appendix C - FLEXsuite of Application Protocols - FLEX technology explained, licensing information, and licensee form.

Audience

This document was created for third-party developers who install the CreataLink2 XT data transceiver and develop application programs that communicate with the unit. Use of this manual to build applications for separate sale or license in connection with data transceivers NOT purchased from SmartSynch, Inc. is unauthorized and requires separate written permission from SmartSynch, Inc.

Conventions

Special characters and typefaces, listed and described below, are used in this publication to emphasize certain types of information.

Note: Emphasizes additional information pertinent to the subject matter.

Caution: Emphasizes information about actions which may result in equipment damage.

Warning: Emphasizes information about actions which may result in personal injury.

Commands are shown **`like this`**

Related Publications

The following documents provide additional information to integrators and application developers:

- *Communication Linking Protocol Reference Manual*, publication 6881033B20
- *CreataLink2® XT R50 Programming Software Guide - Integrators*, publication 6881033B45
- *CreataLink2® XT R25 Programming Software Guide*, publication 6881036B30
- *Software Integrator's Guide*, publication 6881033B65

Product Description

The CreataLink2 XT device is a two-way data transceiver that supports the ReFLEX protocol. The CreataLink2 XT device can initiate transmissions into a ReFLEX Narrow Band Personal Communications System (NBPCS) network, receive and decode data, and store it. It can forward messages it receives from the ReFLEX network to an interconnected host device via an RS-232 level or Transistor-Transistor Logic (TTL) level serial port. The CreataLink2 XT device performs all necessary ReFLEX protocol processing to maintain connection to the ReFLEX network, accurately receives and acknowledges messages, and delivers messages in conformance with protocol requirements.

The CreataLink2 XT provides an 8-bit, bi-directional parallel Input/Output (I/O) port. Each bit can be configured individually as an input or output by the integrator or end-user. The product also has two Analog-to-Digital (A/D) input ports for customer use.

An additional pin is provided for a secondary battery source. This secondary source can be used to back-up RAM contents in the event of a power failure and can be selected through software to power the transmitter.

The CreataLink2 XT device can support an off-board application configuration (see Figure 2-1 below). Off-board applications communicate with the CreataLink2 XT using the Communications Linking Protocol (CLP).

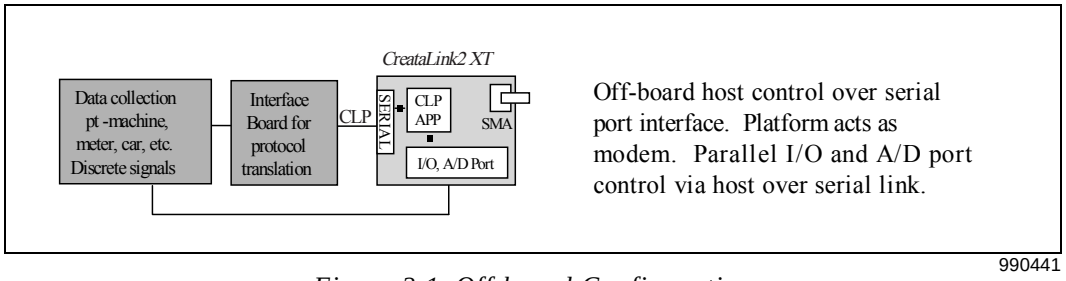

Figure 2-1. Off-board Configuration

The CreataLink2 XT also supports an on-board application configuration which enables third parties to write custom resident applications. This usually eliminates the need for an external application board.

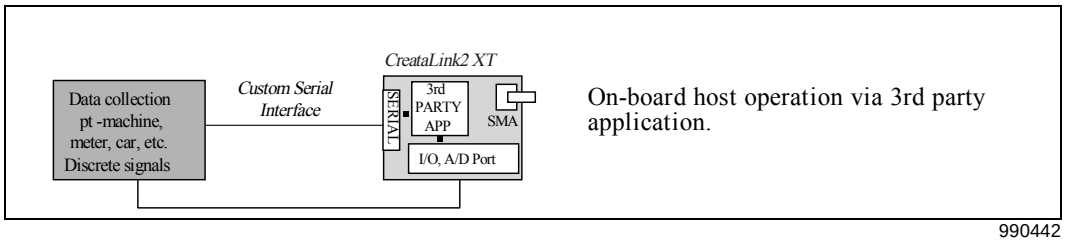

Figure 2-2. On-board Configuration

Architecture

The data transceiver's software architecture is based upon the FLEX Kernel real-time operating system. With the addition of ReFLEX stack software, a message manager, and the CLP default application, it provides a third-party embedded messaging Application Programmer Interface (API). Ownership of the serial port can be passed to a third-party application in place of the CLP application via an application framework provided by SmartSynch, Inc. An ARM core based microprocessor provides the following features:

- 32-bit addressing
- 8, 16, and 32-bit data
- State-of-the-art software development tools
- Industry standard Joint Test Action Group (JTAG) port
- Debugging support tools and environment via JTAG port

The serial port data interface supports the CLP application. The CLP serial interface commands the data transceiver to obtain status information about the network, transmit messages, and download received messages.

Components

The CreataLink2 XT hardware incorporates RF, digital, and analog circuitry on one Printed Circuit Board (PCB). The product contains no housing and is sold as an Original Equipment Manufacturer (OEM) product. The data transceiver has an industry-standard Sub-Miniature connector (SMA) connection for cabling to a remote antenna.

Features

The CreataLink2 XT device incorporates the following features.

- Compact package with four mounting holes
- External SMA female coaxial connector
- Configurable battery-save mode for reduced average power consumption
- Selectable transmit power at antenna connector

  NUF3902: 0.5W, 0.75W, 1.0W, 1.5W and 2.0W
  NUF8006: 0.25W, 0.5W, 1.0W, 1.5W, and 2.0W
- Asynchronous transistor-transistor logic (TTL) or RS-232 serial port interface that supports standard baud
- Alternate transmitter power source connection
- 8 Bi-directional I/O lines available for external interfacing; 2 driven outputs and 6 open collectors
- 2 A/D input lines available for reading analog signals
- Receive frequency range:

  NUF3902: 940-941 MHz
  NUF8006: 929-941 MHz
- Transmit frequency range:

  NUF3902: 901-902 MHz
  NUF8006: 896-902 MHz
- Two-way paging protocols:

  NUF3902: ReFLEX 50 (R50)
  NUF8006: ReFLEX 25 (R25)
- Duplicate message detection/deletion
- Out-of-range indication
- Individual and broadcast message addressing
- 2000-byte uplink message length
- Single fragment, approximately 1000-byte downlink message length
- Backup battery option for SRAM
- FLASH for third-party on-board application or non-volatile storage
- 32KB RAM for messages
- JTAG interface for software debugging
- External reset

Although the data transceiver can receive messages of up to 1000 bytes in length, the carrier might not send this amount of data in a single transmission. Obtain maximum single fragment message length from your carrier.

Specifications

Table 2-1. General Specifications

Item	Specification	Specification
Board Kit Number	NUF3902	NUF8006
Coding format	ReFLEX 50	ReFLEX 25
Serial Protocol	CLP or third-party application	CLP or third-party application
Operating temperature	-40°C to +85°C	-40°C to +85°C
Interface	22-pin vertical shrouded header for combined power supply, serial, and parallel I/O interface. 8-pin vertical shrouded header for JTAG interface; SMA connector for antenna	22-pin vertical shrouded header for combined power supply, serial, and parallel I/O interface. 8-pin vertical shrouded header for JTAG interface; SMA connector for antenna
Power supply requirements	5-12 Vdc, 2.5A minimum, 100 mVpp ripple up to 5 MHz (worst case estimate if sourcing/ sinking I/O at max values)	5-16 Vdc, 2.5A minimum, 100 mVpp ripple up to 5 MHz (worst case estimate if sourcing/ sinking I/O at max values)
Backup battery/ alternate transmit power supply requirements	3-9 Vdc, 1 mA if used for RAM backup only. 5-9Vdc, 1.4A minimum, 100 mVpp ripple up to 5 MHz if used for transmitter supply (Battery voltage must be equal to or less than the main supply voltage)	3-9 Vdc, 1 mA if used for RAM backup only. 5-9 Vdc, 1.4A minimum, 100 mVpp ripple up to 5 MHz if used for transmitter supply (Battery voltage must be equal to or less than the main supply voltage)
Physical dimensions	Length: 3.75 in (95.25 mm)	Length: 3.75 in (95.25 mm)
	Width: 1.75 in (44.45 mm)	Width: 1.75 in (44.45 mm)
	Height: 0.7 in (17.78 mm)	Height: 0.7 in (17.78 mm)
	Weight: 1.5 oz. (42.5 grams)	Weight: 1.5 oz. (42.5 grams)
Antenna Connector	50 Ohm SMA female connector	50 Ohm SMA female connector
Transmitter specifications:		
Frequency	901–902 MHz	896-902 MHz
RF power output (at antenna port)	0.5W, 0.75W, 1.0W, 1.5W, and 2.0W	0.25W, 0.5W, 1.0W, 1.5W, and 2.0W
Transmit data bit rate	9600 bits per second (bps)	800, 1600, 6400, 9600 bps
Modulation	4-level Frequency Shift Keying (FSK)	4-level FSK
Frequency stability	1 ppm on transmit	1 ppm on transmit
Receiver specifications:		
Frequency	940–941 MHz	929-941 MHz
Sensitivity	-115 dBm into SMA antenna connector	-115 dBm into SMA antenna connector

Table 2-1. General Specifications (Continued)

Item	Specification	Specification
Receive data bit rate	6400 bps	1600 and 3200 bps using 2-level FSK 3200 and 6400 bps using 4-level FSK
Modulation	4-level FSK	2-level and 4-level FSK
Channel Spacing	50 kHz	25 kHz
I/O		
HVIO-0 – HVIO-5 (configured as outputs)	12 Vdc maximum pullup voltage. 25 mA maximum sink current (@12 Vdc pullup)	16 Vdc maximum pullup voltage. 25 mA maximum sink current (@16Vdc pullup)
HVIO-0 – HVIO-5 (configured as inputs)	12 Vdc maximum input	16 Vdc maximum input
HVIO-6 & HVIO-7 (configured as outputs)	Driven to supply voltage (12 Vdc maximum) Maximum sourcing/sinking current is 350 mA	Driven to supply voltage (16 Vdc maximum) Maximum sourcing/sinking current is 350mA
HVIO-6 & HVIO-7 (configured as inputs)	Maximum input limited to that of supply voltage	Maximum input limited to that of supply voltage

Environmental Constraints

The CreataLink2 XT device meets the following environmental specifications (see Table 2-2):

Table 2-2. Environmental Specifications

Item	Requirement
Humidity	90% relative humidity at 50°C non-condensing onto pcb
Drop/shock test	Compliant with TIA/EIA 603 specifications
Vibration	TIA/EIA 603, Section 3.3.4.
Emissions	FCC requirements for radiated and conducted emissions, per Parts 2, 15, and 24 of title 47 Code of Federal Regulations.

Power Requirements

To conserve power, the FLEX protocol for two-way paging provides low power modes of operation. In receive mode, all logic and receive circuits are powered while waiting to receive a message. In standby mode, all circuits are in a low power state for power economy. In transmit mode, all logic circuits and the power amplifier are active and consume large amounts of current for short durations.

Table 2-3. Power Consumption

Item	NUF3902	NUF8006
Operating Mode	Current Drain (approximate)	Current Drain (approximate)
Standby	3 - 5 mA[b]	1 - 5 mA[b] See Figure 2-3 for typical performance
Receive	65 - 90 mA[a]	25 - 90 mA[a] See Figure 2-4 for typical performance
Transmit (2 W setting)	1250 - 1400 mA[a]	350 - 1400 mA[a] See Figure 2-5 for typical performance
RS-232 Communication	3 - 4 mA	3 - 4 mA
HVIO_0 - HVIO_5, configured as outputs, driven to the low state, sinking max current	25 mA each	25 mA each
HVIO_6 and HVIO_7, configured as outputs, driven to high state, sourcing max current.	350 mA each	350 mA each

a. Does not include current due to RS-232 communications.
b. No Valid RS-232 voltages and all 8 I/O lines configured as inputs.

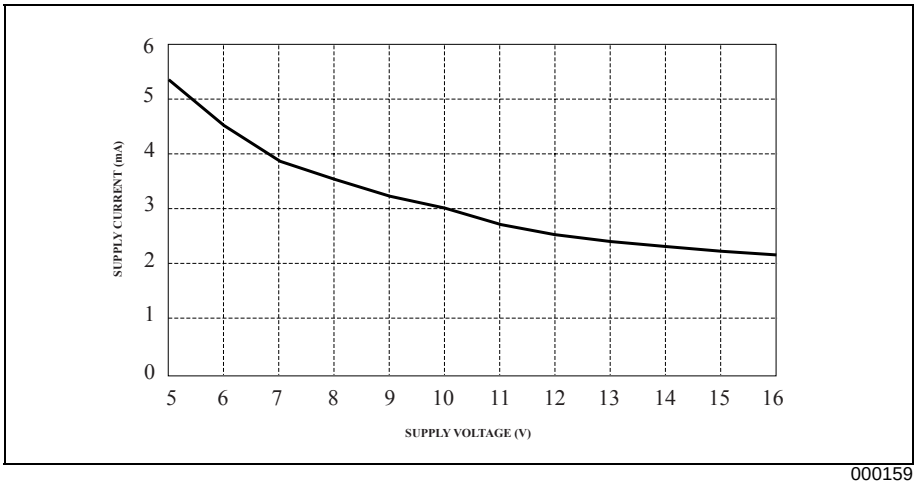

Figure 2-3. NUF8006: Average Sleep Current versus Supply Voltage

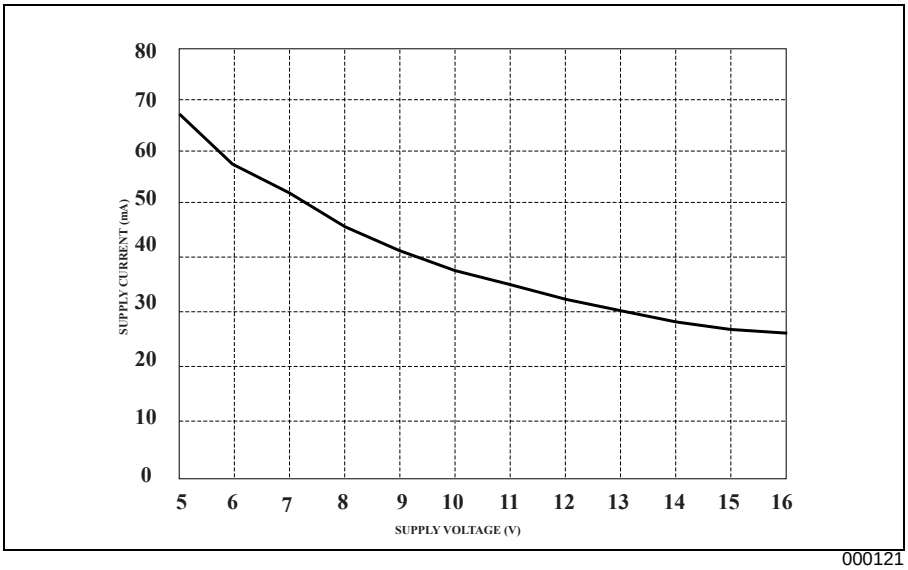

Figure 2-4. NUF8006: Average Receive Current versus Supply Voltage

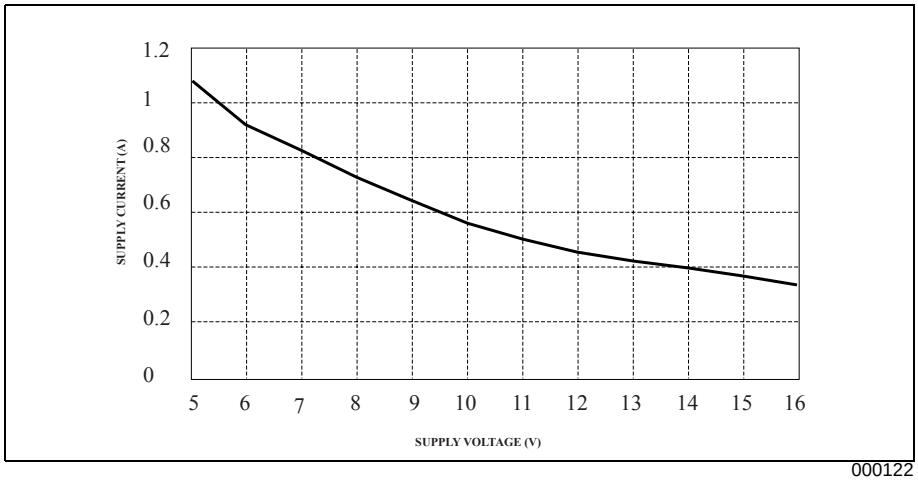

Figure 2-5. NUF8006: Average Transmit Current versus Supply Voltage

Connectors Description

The CreataLink2 XT device features the following connectors:

External Antenna Connector

The external antenna connector is a succoplate, tin-dipped, SMA female connector. It provides a 50-ohm connection to the CreataLink2 XT board.

Power/Serial/Parallel I/O

The 22-pin connector provides electrical power, serial, and parallel I/O capability for the CreataLink2 XT device. Connectors are rated at 2A per contact. (See Section 6, "Parts Information" for part numbers of mating connectors).

Table 2-4. 22-Pin Vertical Header Connector Signals

Pin Number	Signal Name	Description
1	Supply	Power Supply Connection
2	GND	Ground
3	TXDO	3.3V TTL Serial Data from CreataLink2 XT device
4	RS232_TXDO	+/- 5V RS-232 Serial Data from CreataLink2 XT device
5	BATT	Backup Battery / Alternate Transmit Power Supply
6	BATT_GND	Ground
7	RXDI	TTL Serial Data received by CreataLink2 XT device
8	RS232_RXDI	RS-232 Serial Data received by CreataLink2 XT device
9	RESET_ENABLE	3.3V active-high input used to enable external reset capability (no connect if not used)
10	EXT_RESET	3.3V active-low input used to reset CreataLink2 XT (no connect if not used)
11	RX_ACTIVE	3.3V when CreataLink2 XT device is receiving a message
12	TX_ACTIVE	3.3V when CreataLink2 XT device is transmitting a message
13	A/D_EXT1	Externally supplied analog input
14	A/D_EXT2	Externally supplied analog input
15	HVIO_0	Open collector output/High voltage input

Table 2-4. 22-Pin Vertical Header Connector Signals (Continued)

Pin Number	Signal Name	Description
16	HVIO_1	Open collector output/High voltage input
17	HVIO_2	Open collector output/High voltage input
18	HVIO_3	Open collector output/High voltage input NUF8006 only: Input Capture 2
19	HVIO_4	Open collector output/High voltage input
20	HVIO_5	Open collector output/High voltage input
21	HVIO_6	Open collector output/High voltage input NUF8006 only: Input Capture 1
22	HVIO_7	Driven output/High voltage input

JTAG Communication Port

Table 2-5 shows the 8-pin vertical header connector signals.

Table 2-5. 8-Pin Vertical Header Connector Signals

Pin Number	Signal Name	Description
1	B++	ICE power source
2	TMP1	Mode select
3	ARM_TDI	JTAG Data in
4	ARM_TRST	JTAG reset
5	ARM_TCK	JTAG clock
6	GND3	Ground
7	ARM_TDO	JTAG Data out
8	ARM_TMS	JTAG I/O

It is assumed that the Embedded ICE or JEENI is used to drive these signals for on-board/embedded applications only.

Accessories

The following accessory options are available for the CreataLink2 XT device:

- External antenna kit
- CreataLink2 XT device interface kit

See Section 6, "Parts Information" and the inside of the back cover for part numbers and ordering information.

External Antenna Kit

The external antenna kit includes a low profile antenna and coaxial cable with connector (see Table 2-6).

See Section 6, "Parts Information" and the inside of the back cover for part numbers and ordering information.

Table 2-6. External Antenna Specifications

Property	Description
Type	Low profile with radome
Transmit frequency	896-902 MHz
Receive frequency	929-941 MHz
Impedance	50 ohms nominal
VSWR	1.5:1 maximum
Polarization	Linear, vertical
Gain	0 dBi
Maximum power	5 watts continuous
Coaxial cable	6-foot long RG58/U with SMA male connector

Interface Kit

The interface kit contains a PCB assembly and two cables. The interface PCB assembly takes the signals on the 22-pin connector and brings them out for easy access during hardware and software development. For a detailed description, see the *Software Integrator's Guide* listed in "Related Publication" section, for development of an on-board/embedded application or Section 5 of this manual for development of an off-board CLP application.

See Section 6, "Parts Information" and the inside of the back cover for part numbers and ordering information.

Typical Configurations

End-User Configuration

The CreataLink2 XT data transceiver has an antenna connected to the SMA connector on the board and a customer-developed cable to the 22-pin header on the board for main supply power, alternate power for transmitter/backup battery supply, I/O, A/D, and serial interface (see Figure 2-6, top).

Software Development Configuration

The CreataLink2 XT data transceiver is connected to an interface board, which can be connected to a PC, another device or an embedded ICE or JEENI box (see Figure 2-6, bottom).

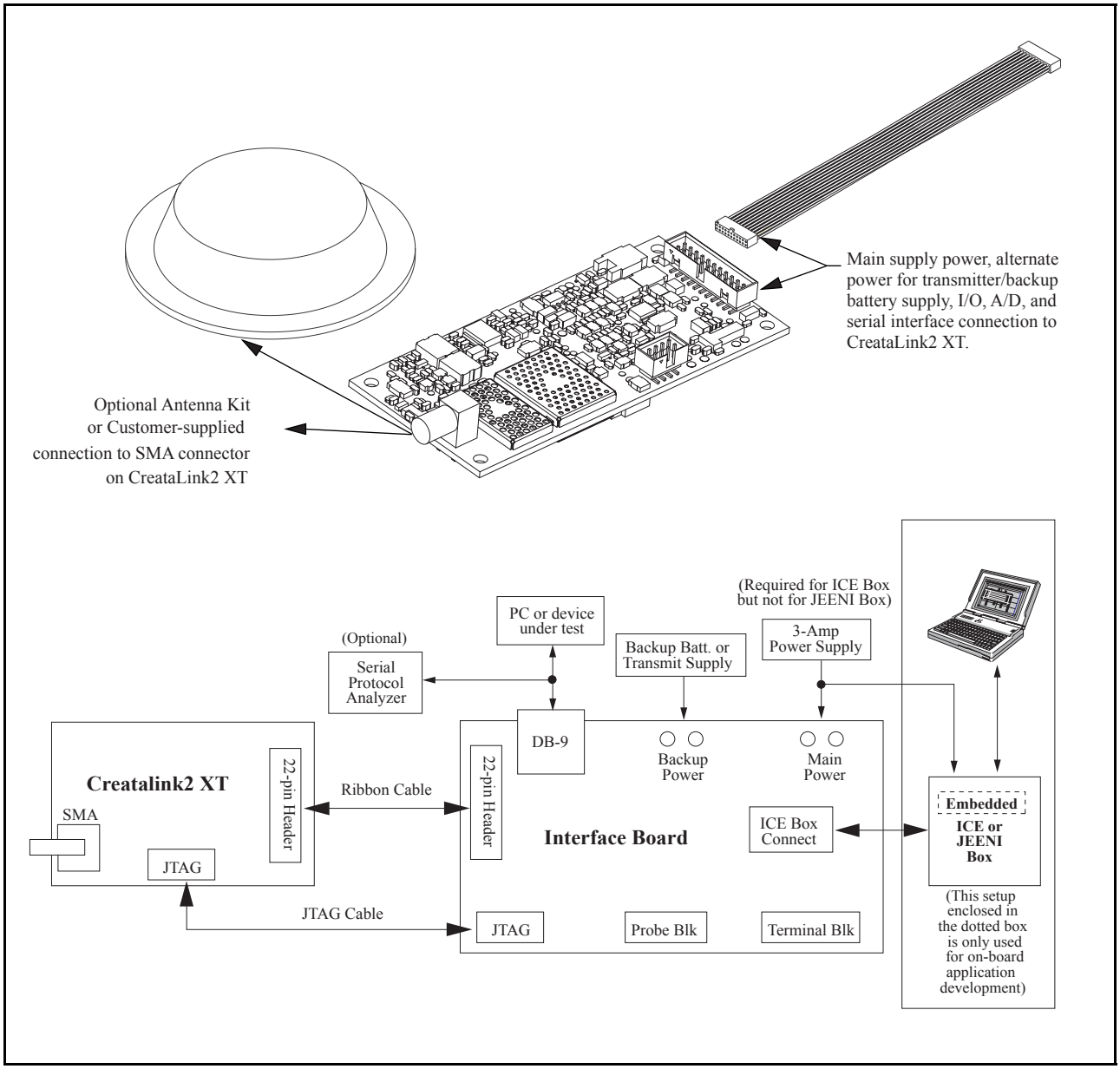

Figure 2-6. Configuration Options

Air Interface

Data transport between the host application and the network requires data exchange protocols. In the radio portion of the network, between the data transceiver and the base station, specialized RF protocols carry the data. These radio protocols are typically transparent in wireless applications. The FLEXsuite of application protocols must be used to transport data between applications on either side of network. FLEXsuite is available from Motorola, Inc. via a license agreement.

Air Interface Protocol

The data transceiver communicates across radio frequency channels via the ReFLEX protocol and an internal 900 MHz radio to operate across the 12.5 kHz (ReFLEX 25) or 10 kHz (ReFLEX 50) RF sub-channels in the 900 MHz band. The network-specific configuration is constant for all like data transceivers on the network, and includes the network ID, channel list, base frame, and home control channel.

On ReFLEX networks, the data transceiver automatically scans available channels to locate an area channel that supports reliable communications. The data transceiver then performs a registration on the channel to establish a connection with the network. The registration process can be disabled via codeplug configuration for fixed location applications. The default configuration is ***Registration Off*** (always considered registered). A data transceiver operating in a typical network, integrated into a product, is shown in Figure 2-7. For more details on network operation, contact your network operator (paging carrier).

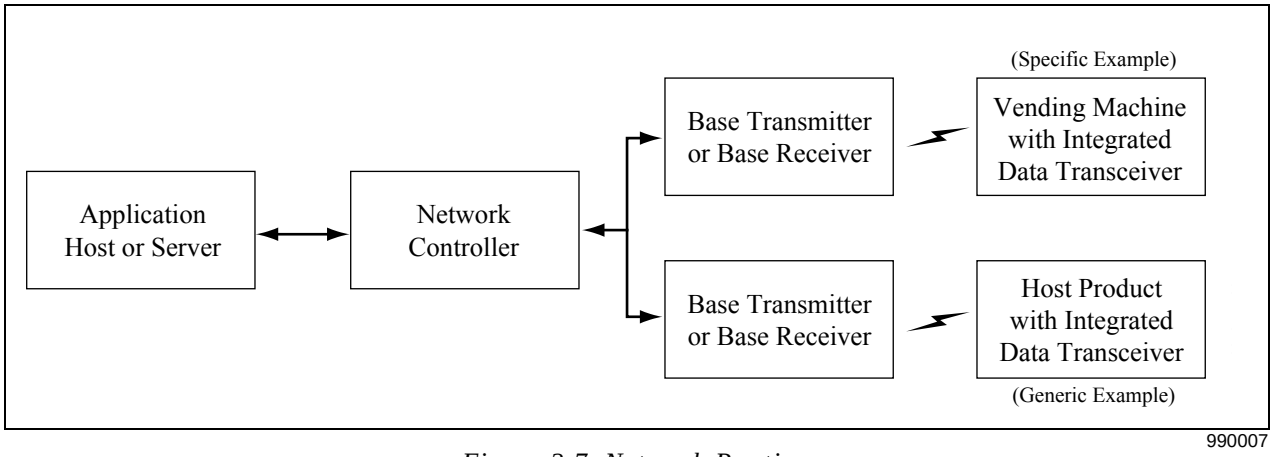

Figure 2-7. Network Routing

ReFLEX Network Operation

All two-way messaging networks that support two-way data communications with CreataLink2 XT device use the ReFLEX protocol. The network can be viewed as two separate one-way networks. For messages directed to the data transceiver, the network controller routes the messages to one of many high power transmitter sites. For messages from the data transceiver, a higher density of receiver sites are provided to compensate for the lower transmit power of the data transceiver.

The Global Positioning System (GPS) synchronizes the downlink and uplink paths, allowing downlink control of the uplink communications path. The network controller schedules all transmissions from the data transceiver for optimal utilization of the uplink communications path.

Downlink messages are delivered at a time when the data transceiver is guaranteed to be listening, as defined by the data transceiver battery-save mode/collapse value.

Each unit is assigned certain frames in which its messages can be received. The personal address collapse and information services collapse values are used to schedule those frames a unit must decode for messages. If you use these collapsed frames, you are trading battery life for the more frequent delivery of messages. Therefore, collapse frame use provides a battery-save mode and defines the percentage of the time the data transceiver is listening to the channel for messages. The remainder of the time the data transceiver is in a low-power state, and is not listening to the carrier channel for messages. It is important for the data transceiver and network controller to remain synchronized in order for messages to be delivered successfully.

The downlink is also referred to as the forward path. The uplink is also referred to as the reverse path.

Product Functionality

The data transceiver relies on system software for basic operational instructions, and on configuration parameter values to meet data transceiver and network interface requirements.

Operating System

The data transceiver operating system is based on the FLEX Kernel operating system. It can be reloaded or upgraded by the service center. For third-party software developers, tools are available to load in main operating code.

Power-up Operating Mode

The data transceiver operates in one of two power-up modes, depending on the condition of the supply voltage. If the supply voltage is not present, the data transceiver does not power up. Minimize cable length to limit the voltage drop across the cable during RF transmissions.

Supply Voltage At or Below Minimum Voltage

If the supply voltage level is less than or equal to 4V, the condition is detected and the data transceiver does not power up.

If the supply voltage is greater than 4V, but less than 5V, the data transceiver powers up but the performance will not be optimal. In this state, the data transceiver can still communicate with the resident host but:

- attempts to initiate messages are likely to fail.
- receive sensitivity is drastically affected.
- transmit power and the corresponding FCC spectral mask are degraded.

When the supply voltage rises above 5V, the data transceiver turns on and the unit sucessfully enters the message-search mode.

Adequate Supply Voltage

A normal power-up occurs when the supply voltage is above 5V. The data transceiver automatically enters the message-search mode.

Message-Search Operating Mode

The message-search mode is the data transceiver's main operating mode. When it powers up, the transceiver turns ON, and the unit begins to search for a valid ReFLEX frame. When the unit detects what appears to be a valid ReFLEX frame, it synchronizes with this channel and begins to decode the contents of the frame. The unit then attempts to register with the network (if the auto-registration feature is enabled). The default configuration is Registration Off (always considered registered). After successful registration, the unit begins normal message decoding and searches for its assigned ReFLEX address(es).

If the data transceiver does not detect a valid ReFLEX frame within approximately 1.5 minutes, the unit enters a low current consumption mode. This mode conserves power for a pre-programmed length of time. When the time has elapsed, the unit attempts, once again, to acquire a valid ReFLEX frame. The unit alternates between

searching for a valid ReFLEX frame and low current mode until it detects a valid ReFLEX frame.

If the data transceiver detects a valid ReFLEX frame and has become synchronized, but does not detect its address, the unit stays on the channel. It continuously decodes frame data and waits for its address(es).

Address Capability

The data transceiver can receive the following addresses:

- ReFLEX 25: 1 personal service address and 6 information service addresses
- ReFLEX 50: 2 personal service address and 1 information service address

Additionally, for the ReFLEX 50 network only, each information service address can have up to 32 subaddresses.

Duplicate Message Detection

To ensure proper message delivery, the data transceiver detects and cancels duplicate messages sent via the paging system. If it finds a duplicate message, the data transceiver discards it in a manner transparent to the host application.

Message Deletion

When all message slots are occupied, or unused message memory is insufficient, the data transceiver deletes the oldest message to make room for a new message. Read messages are deleted before unread messages.

Unit IDs

The data transceiver contains the following user identification strings within the codeplug:

- Serial number
- Electronic serial number (ESN)

The strings are unique to each data transceiver.

Serial Number

The serial number consists of ten bytes of data stored in the data transceiver codeplug. It is factory-programmable only.

Electronic Serial Number (ESN)

The ESN consists of four bytes of data stored in the data transceiver codeplug. Each data transceiver is equipped with a unique serial number which serves as the reverse channel address of the data transceiver.

The serial number and ESN are data transceiver-specific. If the unit is changed for service, these numbers also change. The carrier must be notified to make the PIN number point to the new serial number and ESN.

Message Storage and Lengths

Messages are stored in approximately 32 kbytes of RAM. Message downlink length is a maximum of 1 kbyte, and uplink length is a maximum of to 2 kbytes. Consult your carrier to determine message lengths supported on the network (see "Handling Large Messages", in Section 2 - Getting Started, in the *Software Integrator's Guide*).

Acknowledgment of Received Messages

System Acknowledge

The data transceiver transmits an Acknowledge Transmission signal (**ACK**) to acknowledge automatically the receipt of a message. The data transceiver also transmits a Negative Acknowledge Transmission signal (**NAK**) when messages are not received correctly. If the data transceiver transmits a **NAK**, the system resends the message.

Registration Request

Registration enables nationwide systems to track the data transceiver from region to region. The system then transmits messages only to that region. The Enable Auto Registration codeplug option enables automatic registration. The default registration is OFF, because it is considered always registered for fixed applications.

The data transceiver generates the registration request message and the registration request ALOHA packet with the current zone on the following occasions:

- A valid zone change: The data transceiver monitors the Zone ID field in the ReFLEX frame header. When it recognizes that the frame header has changed, the unit automatically sends a registration message after a delay.
- Power-Up: The data transceiver automatically transmits a registration request only if automatic registration is enabled. Automatic registration is only required if the application is mobile. SmartSynch, Inc. does not recommend automatic registration for fixed location installations.
- A change from out-of-range to in-range: When the data transceiver goes out of forward-channel range, and then returns within forward-channel range, the data transceiver automatically transmits a registration request after a delay.

Configuration Parameters

Data transceiver configuration data is categorized as follows:

- The service provider establishes the network-specific parameters for the data transceiver configuration. Typically, parameters are constant for all like devices on the network. The parameters include the default channel list, roaming parameters, and other service provider protocol-related parameters.
- Only the factory or authorized service depot sets fixed device-specific parameters. These parameters indicate the type of radio installed, the type of data transceiver, and the hardware revision level. Significant configuration items in this category include the ESN, device type, hardware revision level, protocol type, and low voltage thresholds.

PPS Utility

Product Family 91B Programming Software (PPS) is a configuration utility that enables some codeplug options to be programmed into the data transceiver. This application runs on a stand-alone PC with the Windows 95®, Windows 98®, or Windows NT® operating environment. The PPS interacts with the data transceiver via the serial port. Because the 22-pin connector that contains the serial I/O is not standard, you must connect the DB9 connector on the interface kit or a custom cable to the PC serial port. The *Programming Software Guide-Integrators*, listed in "Related Publications", provides instructions for configuring data.

For user-configured items, see Programming Software Guide-Integrators, listed in "Related Publications."

End-User Application Software

To develop your own embedded application refer to the *Software Integrator's Guide* listed in "Related Publications."

Serial Interface

External host devices communicate with the data transceiver across the serial interface via the asynchronous Communication Linking Protocol (CLP™) commands.

The data transceiver supports a default serial baud of 9600 bps, no parity, eight data bits, one start bit, and one stop bit. The host product must provide a full duplex (both directions at the same time) pass-through link at this speed.

Communication Linking Protocol (CLP)

The CLP application contains a set of commands that enable the host to send and retrieve messages, retrieve and modify select configuration information, and retrieve status information from the data transceiver. When longer transmissions are required to transfer data, the XMODEM file-transfer protocol provides error checking during transmission across the serial link.

The CLP application provides general wireless messaging services that are independent of the underlying RF protocol.

For a detailed description of services provided, see the *Communication Linking Protocol Reference Manual* listed in "Related Publications.".

Smart Synch™

Integration Overview

Contents

Integration Goal and Objectives 3-1
Usage Model 3-1
Message Model 3-1
Service Strategy 3-2
System Design of Integrated Product 3-2
Hardware Design 3-2
Power Supply 3-2
Antenna Configuration 3-3
Software Applications Development 3-3
EMI and Desense Testing 3-3
Regulatory Approval 3-3
Final Assembly Test 3-3
Installation and Field Test 3-4
Customer Problem Isolation 3-5
Wireline and Wireless Communications 3-6
Power Conservation 3-6
Network Communication 3-6
Throughput 3-7
Design Tips for Serviceability 3-8
Data Transceiver Accessibility 3-8
SmartSynch Software Utilities 3-8
Developing Diagnostic Software Utilities 3-8
Environmental Issues 3-9
Coasting Performance 3-9
General Precautions 3-10
ESD Precautions 3-11
Regulatory Requirements 3-12
Overview 3-12
Compliance 3-12

Integration Goal and Objectives

SmartSynch, Inc. recommends that you consider the impact of each task on the development plan and allow sufficient time for required activities. Try to identify critical path activities early in product development. The following list summarizes the development tasks. These tasks are discussed in detail in the following chapters.

- Define a usage model.
- Define a message model that specifies how many messages will be sent/ received and how often.
- Define a service strategy.
- Define system design of integrated product
- Design the hardware.
- Consider power supply options.
- Identify the source antenna.
- Design, code, and test an end-to-end application between the data transceiver and host device.
- Obtain regulatory approval.
- Set up an assembly and final test environment.
- Perform a field installation functional verification procedure.
- Develop an in-the-field problem isolation test strategy and the necessary test tools.

Usage Model

As a developer, you must have, above all, a clear understanding of the end-use of the product. End-use directs the development process; all design considerations aim to meet the needs of the final customer.

Design issues related to a mobile device, such as alternator noise and vibration and handling of changing RF conditions, are different from design issues required for a fixed-point telemetry application powered by line power, battery, or solar panel. End-user priorities should determine the critical engineering tradeoffs in the product design.

You are responsible for defining the usage model. SmartSynch, Inc. is available to provide assistance and answer questions but is not directly involved in this phase of the project.

Message Model

The message model is related to the usage model. Create the message model to determine how much and how often data is sent in each of the uplink and downlink directions. Power supply requirements and network message routing selection depend on this data determination. The amount of data sent and received is also relevant in calculating the cost of airtime. Many engineering decisions require the message model as source data.

You are also responsible for defining the message model. A typical approach to creating the message model is to define the peak and average throughput requirements based on the type of application. Take into account both normal and unique conditions. Typical current consumption figures for each of the various models of operation (transmit, receive, standby) are provided in this manual.

For ReFLEX networks, message latency is inherently longer than in circuit-switched connections. Use shorter messages to minimize latency and increase reliability.

Service Strategy

The objective of the service strategy is to define processes by which to identify the cause of a user's problem and keep the customer operational during repair.

Diagnostics

It is best to test the data transceiver while it is integrated with the host at the user's site. To provide this function, the product must include a pass-through mode of communications for the data transceiver. SmartSynch, Inc. recommends that you incorporate a test mode that extracts details of the status of the data transceiver in the host application.

Customer Support

For uninterrupted service, SmartSynch, Inc. recommends that you install a spare unit and call the service provider to update its database with the spare unit information. Return the defective unit to the SmartSynch, Inc. warranty repair center for repair and return.

System Design of Integrated Product

Power source, RFI/EMI issues, and end-user environment are crucial considerations that you must address while meeting CreataLink2 XT device environmental and power supply requirements.

CreataLink2 XT device is a board-level product. It is your responsibility to protect the device from environmental hazards such as dust, rain, condensing humidity, ESD, etc.

Hardware Design

To integrate a wireless data transceiver into a hardware design, you must consider power supply, battery size (where applicable), heat dissipation, isolation from EMI, and physical mounting of the unit for proper grounding. SmartSynch, Inc. can provide recommendations for hardware design, where applicable.

Power Supply

Power supply requirements vary according to the needs defined by the usage and message models. Consider the following when you design a power supply:

- Current drain of the data transceiver in its various operating modes
- Ripple and noise on the power lines
- Supply instantaneous current (up to 1400 mA) to allow proper transmitter operation (2.5 A supply if using the I/O)

These requirements define the type of power supply (linear or switched) to use with the wireless data transceiver. See Section 2, Table 2-1 "General Specifications" for power supply requirements.

Antenna Configuration

The data transceiver is available with an optional antenna from SmartSynch, Inc. See Section 4, "Hardware Integration" for other antenna suppliers.

Use the following guidelines when you mount the data transceiver:

- Mount the device away from any metallic or conductive enclosures.
- Mount the device away from items that produce RF noise, such as a poorly-shielded PC.
- Use an antenna with a gain of 0 dBi to +3 dBi to maximize the effective radiated power (ERP) of the antenna.
- Mount the antenna according to the guidelines in Section 4.
- If you must mount the device in a metallic or conductive enclosure, mount the antenna outside the enclosure and connect it to the data transceiver via the female SMA connector with the coaxial cable (RG58).

Software Applications Development

In addition to the specific software application, SmartSynch, Inc. encourages you to incorporate wireless-specific reporting and monitoring features into the application, so as to make it more sensitive to the wireless environment (registration states and messaging status information, for example). The data transceiver uses a packetized serial interface (CLP) to enable the application to monitor wireless link-related information and application-specific data simultaneously. The *Communication Linking Protocol Reference Manual* describes this interface in more detail. If you use an on-board application configuration, the required information is available via the API in the *Software Integrator's Guide*.

EMI and Desense Testing

Data transceiver operation requires that there is minimum electromagnetic interference radiating from the product platform. Excess noise significantly reduces the effectiveness of the wireless data transceiver, making it less likely to receive network messages.

Regulatory Approval

Every commercial RF device must display an FCC regulatory label on the outside host case. The FCC also requires the wireless data transceiver to transmit random data patterns on specific frequencies while incorporated in the host platform. The data transceiver incorporates special debug modes to help test for regulatory compliance with this requirement. For most applications, no additional FCC certification is required.

Final Assembly Test

To verify proper assembly of the final product (antenna connection and operational serial and/or parallel port) perform an end-to-end test. This test verifies that the final product can receive and transmit at the required signal levels and has operational I/O ports.

Installation and Field Test

A product shipped to a site might be mounted in a location that restricts RF communications. To verify that the data transceiver is located in an area of good coverage, and that an end-to-end loopback message is possible, the product needs a software application to perform the test or a pass-through mode that enables a message to be sent and received. Work with your carrier to determine exactly how to do this on the network.

The most effective approach to field testing is to include an installation test procedure as part of the standard host application software. SmartSynch, Inc. can recommend the specific network information available from the data transceiver and how to best implement an end-to-end loopback test.

Customer Problem Isolation

When a customer reports a problem from the field, you must isolate the source. To isolate the problem, determine if it is the network, the wireless data transceiver, or the host product that is causing the problem. Often, the customer misunderstands the use of the product. Off-site troubleshooting reduces the number of returned products and service costs, particularly if the host must be disassembled to remove the data transceiver.

SmartSynch, Inc. recommends that the product application (both at the terminal and host ends) incorporate diagnostic software that enables you to identify problems from a remote site. One method is to incorporate progressively deeper loopback tests. Use progressively longer message lengths to determine when the communication link fails.

Make this diagnostic function part of the standard software load. SmartSynch, Inc. can indicate the types of failure condition reporting mechanisms present in the data transceiver and recommend implementations.

Wireline and Wireless Communications

Consider the similarities and differences between wireline and wireless communications: Wireline data communications involve two data transceivers that use a dial-up telephone link to send and receive data. This type of communication is known as "full duplex, circuit-switched communications." Full duplex indicates both sides can send and receive simultaneously. Circuit-switched indicates the sender and receiver have access to the entire communications line at all times without sharing with other users. The wireline method of communications wastes air time in a wireless setting because, typically, one side does most of the transmitting while the other side is listening.

In wireless packet communications, the sender and receiver can share the communication media with other users by sending packets, or bursts of data. This method of communication enables other users to send their packets between the gaps. To reduce data transmission cost, the communications are usually sent half duplex; the sender does not listen while it transmits.

Some data communications protocols (XMODEM and YMODEM) are designed to be used on a full duplex, circuit-switched connection. The user pays for the number of minutes the circuit is open, regardless of the amount of data sent. Short timers, numerous link level acknowledgments, and error correction help speed the data transfer. With wireless packet data, the user is billed only for the data actually sent. It makes more sense to consider communications in terms of datagrams (similar to what is used in IP). Much of the error correction and acknowledgment information sent in wireline communications becomes an extra cost burden because the packet data protocol already provides for forward error correction and link level acknowledgments.

Determine which applications are best suited for wireless and which applications need to be modified before you use wireless. Message-based applications such as database lookup, e-mail without attachments, and point-of-sale transactions are suited to wireless communication, often without modification. Applications that send handshaking messages or applications with timers that resend too quickly are unsuitable for wireless communications because of the unnecessary overhead traffic they generate.

Power Conservation

For installations that require power conservation (battery or solar cell powered), consider data transceiver power consumption in the various operating states and how data transceiver configuration affects power consumption. The data transceiver uses the ReFLEX protocol battery-save cycle configuration, a customer-ordered option, for low power consumption. To reduce average power consumption further, activate the data transceiver only when needed (see Table 2-3, "Power Connection" section, and "Power Supply Circuit Details" section).

Network Communication

There are two ways to communicate with a network:

- Connection
- Connectionless

Most packet communication is connectionless and does not require call setup and teardown for communications. For the most efficient airtime solution, SmartSynch, Inc. recommends a connectionless communications model.

Throughput

The network throughput of the device depends on several factors:

- Raw throughput of the radio channel
- Overhead involved in forward error correction
- Support for packet headers
- Number of active users on a shared RF channel
- Network configuration

Design Tips for Serviceability

Consider the concept of serviceability early in the design. Create a functional service strategy that includes procedures for performing unit-level screening. The test must determine whether a fault lies with the data transceiver or with the product into which the data transceiver is integrated. The test must also screen for network problems and human error.

Data Transceiver Accessibility

Locate the data transceiver so that the serial I/O, parallel I/O, and antenna connections are accessible. Quick access to the data transceiver enables easy removal and installation, troubleshooting, and functional testing.

SmartSynch Software Utilities

SmartSynch, Inc. provides the programming software utility with which to configure the data transceiver. The PPS operates with Windows 95, Windows 98 and Windows NT and communicates via the RS-232 serial connection. For microprocessor-based host platforms, provide a pass-through mode that enables the programming software utility to run while the data transceiver is connected to the end-user's host design or system.

Developing Diagnostic Software Utilities

A thorough serviceability plan includes a needs assessment for developing software utilities that help you to identify communication problems among the product, the data transceiver, and the RF network. These utilities must send commands to the data transceiver, evaluate responses, perform network connectivity testing, and verify data communications with the network.

Develop these utilities via the CLP command set or the internal CLP API if you are developing an on-board/embedded application. The CLP API provides the capability to monitor and evaluate data transceiver operating conditions and all communications to and from the wireless network host.

The CLP command set and CLP API supports reading of a diagnostic buffer that provides the view of the network from the data transceiver. This utility is essential for field service engineers and service center technicians attempting to diagnose product problems, and trace such problems to failed assemblies or mismanaged communications links. See the "Diagnostic Mode" subsection of the "Off-Board Application Development" chapter in the Software Integrators Guide for details.

Pager to/from e-mail and pager-to-pager communication is supported in the ReFLEX protocol, which SmartSynch, Inc. recommends for diagnostics. An example of this feature is sending a message to a pager worn by the technician servicing the equipment. This enables you to perform local troubleshooting.

Environmental Issues

The CreataLink2 XT device is designed as an OEM module. Any data transceiver applications are housed in a host product. The data transceiver has been tested to environmental specifications that meet the applications of most integrators.

As an integrator, you must meet the following guidelines:

1. The data transceiver must be housed in an enclosure to protect the board assembly from condensation and water/dust/salt fog intrusion. Any condensation on board assembly will cause CreataLink2 XT device to be non-functional.
2. Provide mechanical support of the PCB to withstand drops, transport stress, and handling.
3. Power supply must be clean per Table 2-1.
4. Ambient air temperature around the CreataLink2 XT device must be maintained between -40 degrees C and +85 degrees C.

Coasting Performance

Coasting is the process by which the data transceiver remains synchronized to the ReFLEX network during periods when ReFLEX information (i.e. frames) is not being received by the data transceiver. The absence of ReFLEX frames can be caused by the data transceiver being in an RF fade or by the network being configured to intentionally stop transmitting ReFLEX frames for a period of time. Synchronization, in this case, has both timing and frequency elements.

Maintaining timing synchronization with the ReFLEX system is critical for both network and data transceiver operation. When the data transceiver has a message to transmit into the network, it first informs the network that it has data to send. The network then schedules the data transceiver transmission and informs the data transceiver of the specific time to transmit its data. Failure on the part of the data transceiver to remain very closely synchronized to the network will result in the transmission occurring at an incorrect time and an increased probability of a failed message delivery.

Maintaining frequency synchronization is critical for both receive and transmit operations on the data transceiver. Algorithms deployed in the data transceiver firmware use received ReFLEX frames for frequency correction. Following the absence of ReFLEX frames, should the tuned frequency of the receiver drift too far from the target, messages directed to the data transceiver will not be received. Moreover, the network will not receive messages transmitted by the data transceiver if the frequency of the data transceiver transmitter has drifted out of tolerance.

For a data transceiver in a constant ambient temperature environment, timing and frequency errors are very small and can be largely ignored. However, in a dynamic temperature environment, temperature variation of component tolerances can cause synchronization to be lost. Algorithms in the data transceiver firmware have been developed to track, predict, and correct both timing and frequency errors within certain design limits.

A data transceiver in an open air environment (i.e. not in a housing) can maintain timing and frequency synchronization with the network in the presence of a temperature gradient not exceeding 1°C/minute. The addition of a housing around the data transceiver provides an insulating layer which reduces the gradient of the temperature change experienced by the components on the data transceiver PCB. It is up to the integrator to select appropriate housing material and thickness, and/

or provide another means of insulating the data transceiver sufficiently to achieve a temperature gradient at the board level not exceeding 1°C/minute.

General Precautions

Failure to provide adequate protection will void the device warranty.

Take the following general precautions to prevent damage to the data transceiver:

- Handle the data transceiver as little as possible.
- Wear a grounded antistatic wrist strap while you handle the data transceiver.
- Do not bend or stress the data transceiver.
- Insert connectors straight and evenly to avoid bending pins.

ESD Precautions

This data transceiver contains components that are sensitive to ESD. People typically experience up to 35 kV ESD while walking on a carpet in low humidity environments. Many electronic components can be damaged by fewer than 1000V of ESD. Observe handling precautions when you service this equipment:

- Eliminate static generators (plastics, styrofoam, etc.) in the work area.
- Remove nylon or double knit polyester jackets, roll up long sleeves, and remove or tie back loose-hanging neckties.
- Store and transport all static-sensitive components in ESD protective containers.
- Disconnect all power from the unit before ESD sensitive components are removed or inserted, unless otherwise noted.
- Use a static safeguarded workstation. Such safeguards includes a conductive wrist strap, ground cords, and static control table mat.

When antistatic facilities are not available, use the following technique to minimize the chance of ESD damage to equipment:

- Place the static-sensitive components on a conductive surface when not in use.
- Make skin contact and maintain the contact with a conductive work surface before you handle the static-sensitive component.
- Maintain relative humidity at 70%–75% in development labs and service centers.

To eliminate electrostatic discharge to the 22-pin connector on CreataLink2 XT within the customer's product/application, it is recommended that the customer's product does not place components within an extended keep out envelope of 15 mm around the 22-pin connector.

Regulatory Requirements

This chapter provides guidance on how to obtain regulatory approval of products that integrate the CreataLink2 XT data transceiver.

Overview

Worldwide, government regulatory agencies for communications have established standards and requirements for products that incorporate fixed, mobile, and portable radio transmitters. To this end, SmartSynch, Inc. must certify the CreataLink2 XT device in specific regional markets to levels of compliance appropriate for an integrated device. Approvals are required for two interrelated reasons: to guard public safety and to ensure electrical noninterference.

The nonintegrated data transceiver meets the following FCC regulatory requirements:

- FCC Part 90—Radio Performance
- FCC Part 15—Conducted and Emitted Radiation Class B
- FCC Part 24—NBPCS-Narrow Band PCS Transceivers

SmartSynch, Inc. is responsible for testing and verifying that the CreataLink2 XT device complies with all of the above FCC requirements. The process includes extensive measurements such as conducted power-out, emission limits, spurious emissions (conducted and radiated), RF hazard, and frequency stability over temperature. The test data are compiled as a formal report and submitted to the FCC for Type Acceptance certification. Once approved, all production CreataLink2 XT units are cleared for sale in the U.S., with the required product labeling.

The FCC requires the OEM host product to be labeled as follows:

At the time of this printing, this product contains a type-accepted transmitter approved under FCC ID: E9698109. Contact SmartSynch at www.smartsynch.com to get the latest FCC ID for current releases of hardware.

Refer to FCC CFR 47, Part 2, Subpart J, for information on how to obtain an FCC grantee code, FCC identifier requirements, label requirements, and other equipment authorization procedures.

The FCC does not permit use of an FCC identifier until a Grant of Equipment Authorization is issued. If you display a device at a trade show before the FCC has issued a grant, you must display the following statement prominently:

This device has not been approved by the Federal Communications Commission. This device is not, and may not be, offered for sale or lease, sold or leased until the approval of the FCC has been obtained.

Compliance

Many countries in which the final products are sold require approval from the local governmental regulatory bodies. In the U.S., the FCC requires that the following two individual requirements are met before it certifies the final product:

- Test 1 is the familiar CFR 47, Part 15 qualification requiring proof that the product electronics hardware does not yield local radiation that can affect other equipment, such as TVs and computer monitors.

- Test 2 (CFR 47, Part 24 and 90) proves that the data transceiver remains in its allocated channel spacing when it transmits, and does not produce spikes or splatter in other frequencies. SmartSynch, Inc. undergoes FCC testing with the data transceiver integrated into a dummy OEM host to ensure conformance with these requirements.

According to the equipment authorization rules (CFR 47, Part 2), SmartSynch, Inc. is allowed to authorize a second party to integrate the CreataLink2 XT into another product, provided that the CreataLink2 XT device is unmodified and used as intended. It is your responsibility to determine whether or not the integrator's electronics are subject to further FCC equipment authorization. Consult an appropriate regulatory consultant or agency to determine your exact circumstances. Once this determination is made, make the appropriate implementation:

- Integrator's electronics ARE NOT subject to FCC equipment authorization: Display the CreataLink2 XT device FCC ID, "FCC ID: E9698109", on the common enclosure that houses the CreataLink2 XT device and integrator's electronics. NOTE: Contact SmartSynch at www.smartsynch.com for the latest FCC ID on current CreataLink2 XT hardware.

Or

- Integrator's electronics ARE subject to FCC equipment authorization: Obtain FCC approval for integrator's electronics through all applicable FCC requirements, in which case a unique FCC ID shall be assigned to the electronics. Display the CreataLink2 XT device FCC ID, "FCC ID: E9698109" and the integrator's FCC ID on the common enclosure that houses the CreataLink2 XT device and integrator's electronics. NOTE: Contact SmartSynch at www.smartsynch.com for the latest FCC ID on current CreataLink2 XT hardware.

Smart Synch™

Hardware Integration

Contents

Power Supply **4-1**
Line-Powered Implementation 4-1
Battery-Powered Implementation 4-2
Host Interface **4-3**
Power/Serial/Parallel I/O 4-3
I/O Pin Interface 4-4
RX_Active and TX_Active Signal Behaviors 4-11
Power Connection 4-16
Power Management **4-17**
States of Operation 4-17
Power Profile 4-17
Backup Battery Power/Transmitter Power 4-18
Power Supply Circuit Details 4-19
Shutdown Procedures 4-19
Resetting the Data Transceiver 4-20
Antenna Systems **4-20**
Antenna Safety 4-20
Antenna Selection Criteria 4-20
Antenna Mounting 4-21
Antenna Location 4-21
Antenna Test Methods 4-21
Hardware Recommendations **4-23**
Antenna Connector 4-23
Antenna Cable Assemblies 4-23
Antenna Assemblies 4-23
Antenna Dealers 4-24
Battery Selection Criteria **4-25**
Available Technologies 4-25
Applying Battery Technologies 4-27

Power Supply

SmartSynch, Inc. recommends a 2A power supply in the lab. This ensures sufficient power to transmit. However, if the two driven output ports (pins 21 and 22 of the 22-pin connector) are utilized at their maximum rating of 350 mA sink/source current and the six open collector I/Os are utilized at their maximum rating of 25 mA sink current, it will result in up to 850 mA of additional current consumed. A power supply of 3A would be required. A detailed overview of the interface board is shown in Figure 4-1.

A rise time of 500 us is required on the 2A power supply when you power up the transmitter. The supply voltage can sag to 5V at this time, without impact to transmitter operation.

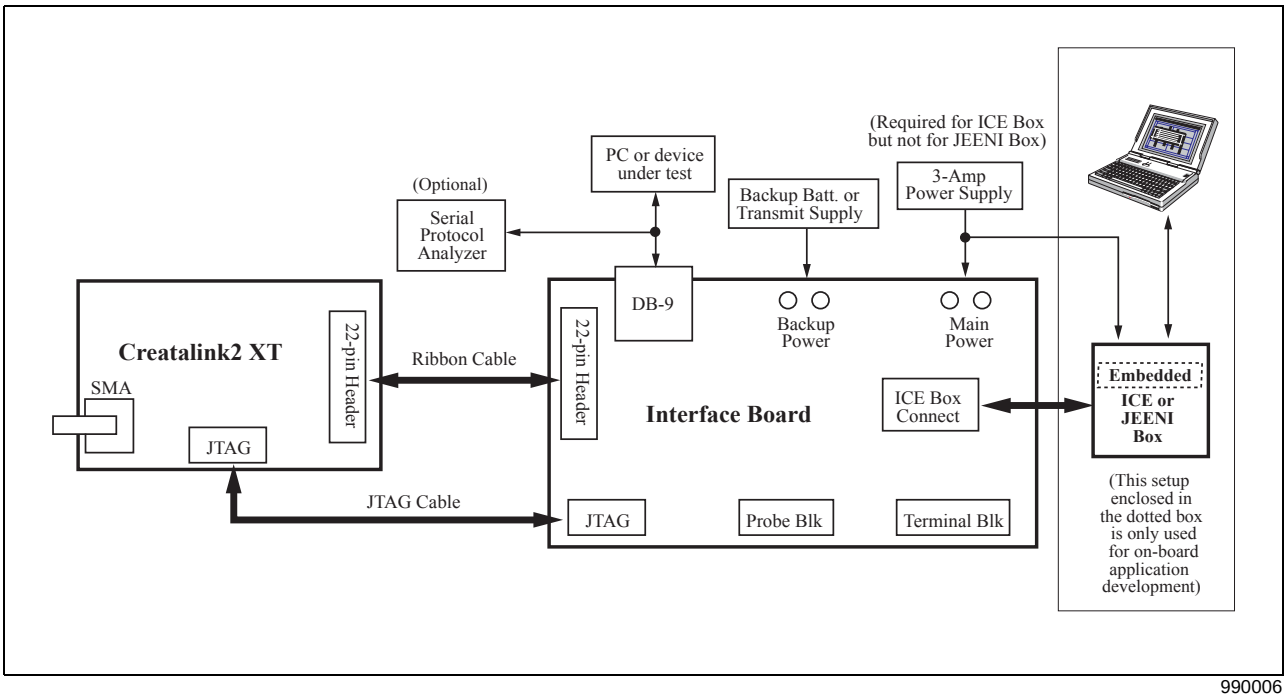

990006

Figure 4-1. Interface Board for Off-Board Host Configuration or Software Development of Third Party Embedded Application

Line-Powered Implementation

Line-powered configurations typically imply fixed-mount applications. A key design consideration is the need to filter 60-Hz noise from the ac supply line, which has a negative impact on data transceiver performance.

The following design considerations are important when you install a fixed-mount application:

- The dc power noise levels on the host interface to the 22-pin connector

- Minimum operating voltage levels
- Shutdown procedures
- Device internal ambient temperature
- Antenna gain and proximity to user
- Repair and reprogramming facilities (pass-through mode of operation)
- Power outage and recovery issues, including the use of a backup battery

Battery-Powered Implementation

The CreataLink2 XT device can use battery power in three distinct ways.

Primary Power

Where there is no convenient access to ac line power, the data transceiver must be powered by a battery. In addition to the design considerations noted previously, you must also select an appropriate battery based on technology, capacity, and operating limits.

The power supply voltage range is 5-12 Vdc for NUF3902 and 5-16 Vdc for NUF8006. The power supply must be capable of supplying 1400 mA for transmitter operation.

If no backup battery is connected or the backup battery lacks sufficient capacity, AND the backup battery is used for transmitting, the following conditions will result:

NUF8006: the unit will reset.
NUF3902: the unit will not transmit and will not reset.

RAM Backup Only

In this mode, a battery may be placed across pins 5 and 6 of the 22-pin connector. When power on pins 1 and 2 fail, the CreataLink2 XT device automatically backs up the contents of the RAM. This data will be available when primary power is restored.

The battery voltage must be between 3 and 9 Vdc, and capable of supplying 1 mA.

RAM Backup and Transmitter/Receiver Supply

The NUF3902 CreataLink2 XT device can be configured via software to use the main supply (pins 1 and 2 of the 22-pin connector) or the battery/secondary supply (pins 5 and 6) for power. If the secondary supply is chosen, it will be used during RF transmissions and while receiving. In addition, this voltage will be used to back up the RAM contents in the event of a power failure.

The battery requirements in this case are the same as those listed in Tables 2-1 and 2-3.

With this method of using the additional battery/alternate power besides the main supply, the requirements of the primary supply change. The primary supply would be required to provide 65-90 mA for normal operation. If required, I/O sourcing and sinking currents would have to be added. As a result, this current could reach as high as 1A.

The NUF8006 CreataLink2 XT is powered from the battery during RF transmissions only when the Battery Transmit Option is used. With this configuration, the main supply powers the CreataLink2 XT during Sleep and Receive modes. The battery requirements are the same as those listed in Tables 2-1 and 2-3.

Host Interface

The CreataLink2 XT device has two connectors that interface with the host:

- Power/Serial/Parallel I/O
- I/O Pin Interface

Power/Serial/Parallel I/O

The 22-pin connector provides electrical power, serial communications, and I/O capability to the data transceiver.

8- and 22-pin part numbers are listed in "Parts Information".

22-pin vertical head connector pin signals are shown in Table 4-1.

Table 4-1. 22-Pin Vertical Header Connector Pin Signals

Pin Number	Signal Name	Description
1	**Supply**	Power Supply Connection
2	**GND**	Ground
3	**TXDO**	3.3V TTL Serial Data from CreataLink2 XT
4	**RS232_TXDO**	+/- 5V RS-232 Serial Data from CreataLink2 XT
5	**BATT**	Backup Battery / Alternate Transmit Power Supply
6	**BATT_GND**	Ground
7	**RXDI**	TTL Serial Data Received by CreataLink2 XT
8	**RS232_RXDI**	RS-232 Serial Data Received by CreataLink2 XT
9	**RESET_ENABLE**	3.3V active-high input used to enable external reset capability (no connect if not used)
10	**EXT_RESET**	3.3V active-low input used to reset CreataLink2 XT (no connect if not used)
11	**RX_ACTIVE**	3.3V when CreataLink2 XT is receiving a page
12	**TX_ACTIVE**	3.3V when CreataLink2 XT is transmitting a page
13	**A/D_EXT1**	Externally supplied analog input
14	**A/D_EXT2**	Externally supplied analog input
15	**HVIO_0**	Open collector output/High voltage input
16	**HVIO_1**	Open collector output/High voltage input
17	**HVIO_2**	Open collector output/High voltage input
18	**HVIO_3**	Open collector output/High voltage input NUF8006 only: Input Capture 2

Table 4-1. 22-Pin Vertical Header Connector Pin Signals (Continued)

Pin Number	Signal Name	Description
19	**HVIO_4**	Open collector output/High voltage input
20	**HVIO_5**	Open collector output/High voltage input
21	**HVIO_6**	Open collector output/High voltage input NUF8006 only: Input Capture 1
22	**HVIO_7**	Driven output/High voltage input

I/O Pin Interface

The CreataLink2 XT device provides many features that you can configure to suit the desired application. Such a configurable feature is the 8-bit parallel I/O port. Six of the eight bits of this port are individually configurable as an open collector output, or as an input. You can configure the remaining two bits as high current driven outputs, or inputs. The desired configuration of this port is stored in nonvolatile memory and is set upon power-up.

Maximum input voltage is specified as 12V for NUF3902 and 16V for NUF8006. Maximum pull-up voltage is specified as 12V for NUF3902 and 16V for NUF8006. The open collector outputs are capable of sinking 25 mA, and the driven outputs are capable of sourcing/sinking up to 350 mA.

Table 4-1 shows a cross reference from signal name to corresponding pin number on the 22-pin connector and each I/O pin's potential functions.

High Voltage Input/Open Collector Output

Figure 4-2 is a view of the circuit and the relevant signals. The block on the right reveals the necessary connections if the circuit is used as an open collector output. If used as an input, there are no external component requirements.

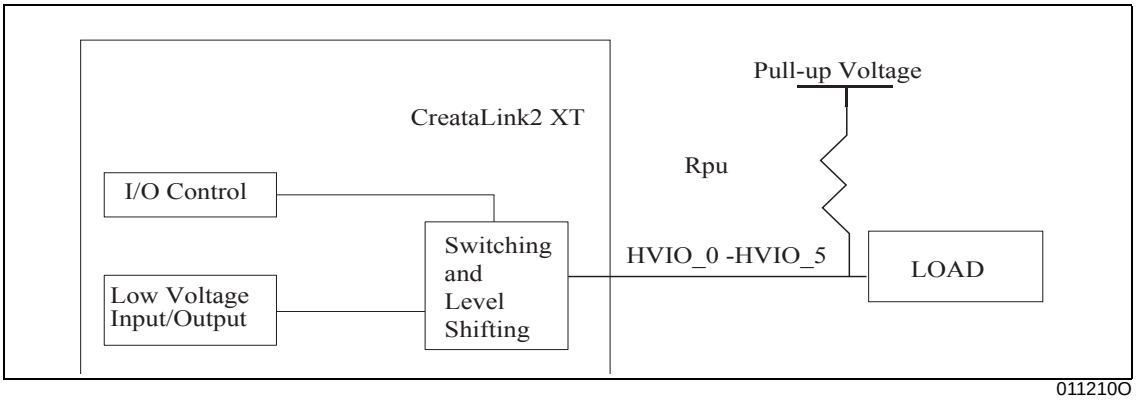

Figure 4-2. High Voltage Input/Open Collector Output Circuit

High Voltage Input Circuit

There are no requirements for external components, unless the input voltage is to be higher than 12V for NUF3902 and 16V for NUF8006. If this is the case, perform external signal conditioning that will limit the voltage to a maximum of 12V for NUF3902 and 16V for NUF8006. Logic ones on the input pin are read as logic ones by the host processor, i.e. normal logic convention.

Over-voltage protection is not provided. ESD/transient protection is provided; however, exceeding the specified maximum input voltages for long durations will render the circuit nonfunctional.

The input voltage must be equal to or less than the supply voltage provided to pin 1 of the 22-pin connector.

Open Collector Output Circuit

A pull-up resistor must be placed between the pull-up voltage and the connection to the CreataLink2 XT device. Otherwise, the circuit will fail.

To size the pullup resistor, follow the steps detailed in"Resistor Sizing Example" on page 4-9. The maximum pull-up voltage for this circuit is specified as 12V for NUF3902 and 16V for NUF8006.

Circuit Specifications/Limitations

The open collector circuit enables the CreataLink2 XT device to interface to systems with higher voltages than it can support itself. This feature alone provides great flexibility in interface circuit design. However, this circuit has some limitations that you must recognize when you design. For example, the pull-up resistor must be sized according to load size and desired output high voltage.

Current Sink Limitations

The CreataLink2 XT device has a maximum current sink capability of 25 mA when the output is in the low state. To exceed this current could cause the circuit to break down, thus causing a potential failure. In addition, this could cause damage to the host processor, rendering the product non-functional. There is no sink current in the high state.

To ensure that this maximum sink current is not exceeded, you must know the circuit pull-up voltage, V_{PU}, specification for the circuit. The pull-up voltage determines the lower-bound for the pull-up resistor, according to the following relation:

$R_{PUmin} = (V_{PU})/(.025)$

Thus, for a system with V_{PU} = 12V, the minimum value for R_{Pumin} would be 480 ohms; for a system with V_{PU} = 16V, the minimum value for R_{Pumin} would be 640 ohms.

Effect of Load Size on Pull-up Resistor

Figures 4-3 through 4-5 are plots that show the effect of pull-up and load resistances on the output high voltage. The output low voltage is guaranteed to be less than 0.5V as long as no more than 25 mA is being sunk.

If a varying load is expected, select pull-up resistors to compensate for the range of this variance. The figures depict simulation data that reflects how the output high voltage is affected by a change in load resistance. Pull-up voltages for these plots are:

- 12V: Figures 4-3, 4-4, and 4-5 for NUF3902
- 16V: Figures 4-6, 4-7, and 4-8 for NUF8006

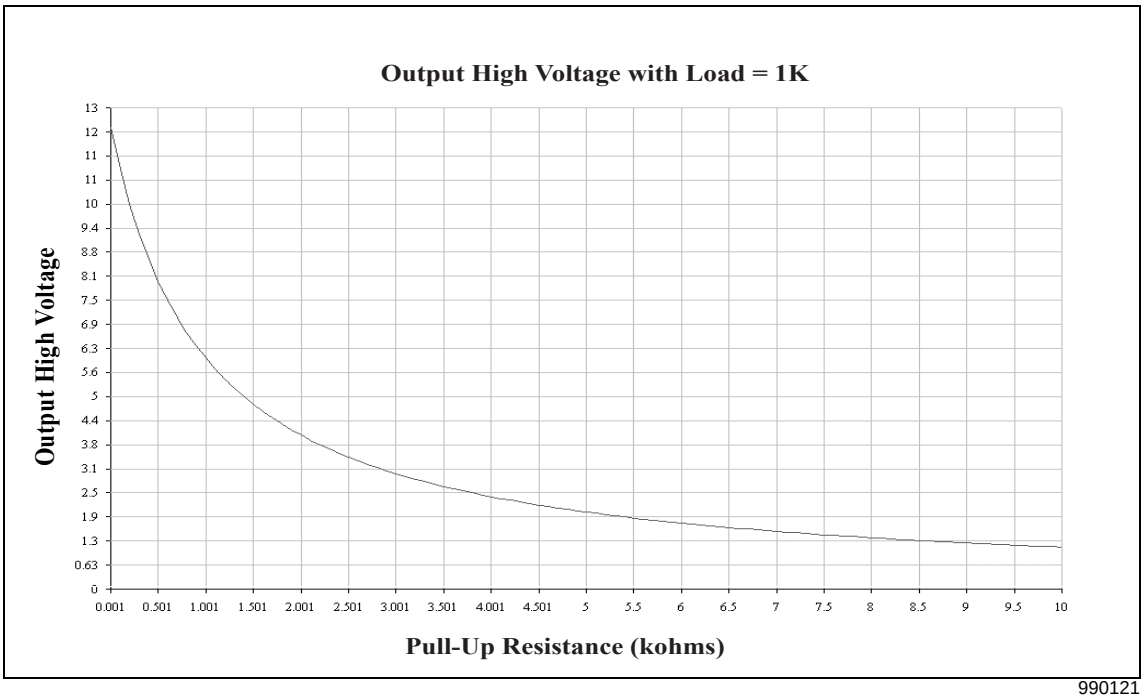

Figure 4-3. NUF3902: Output High Voltage versus Pull-up Resistance

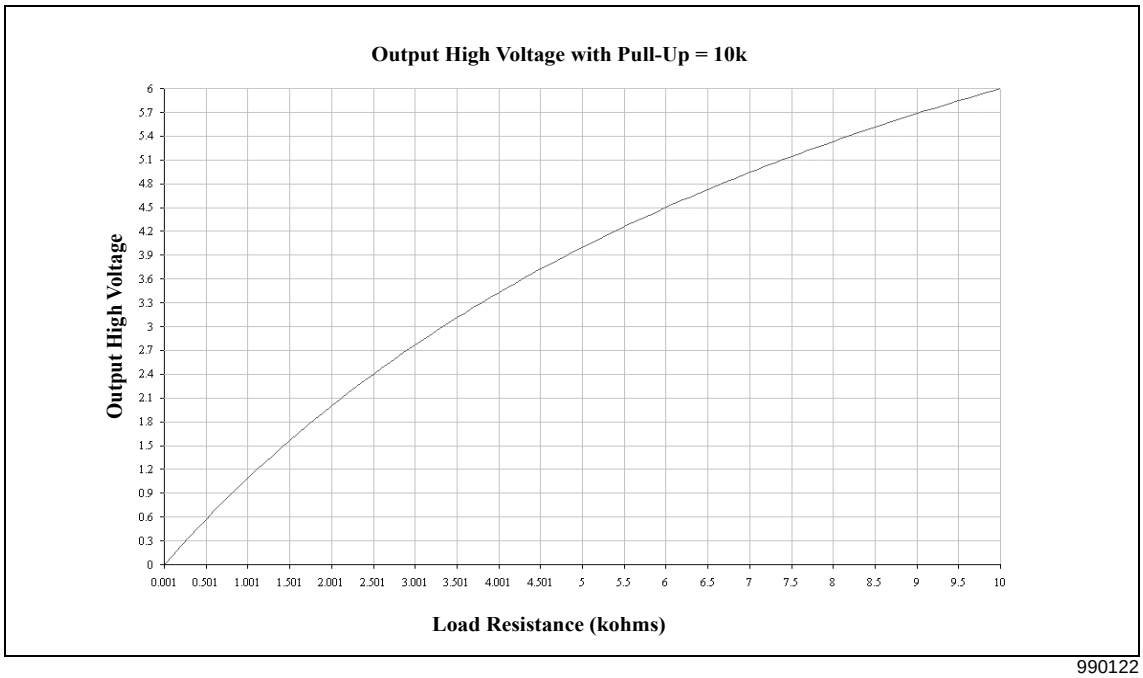

990122

Figure 4-4. NUF3902: Output High Voltage versus Load Resistance

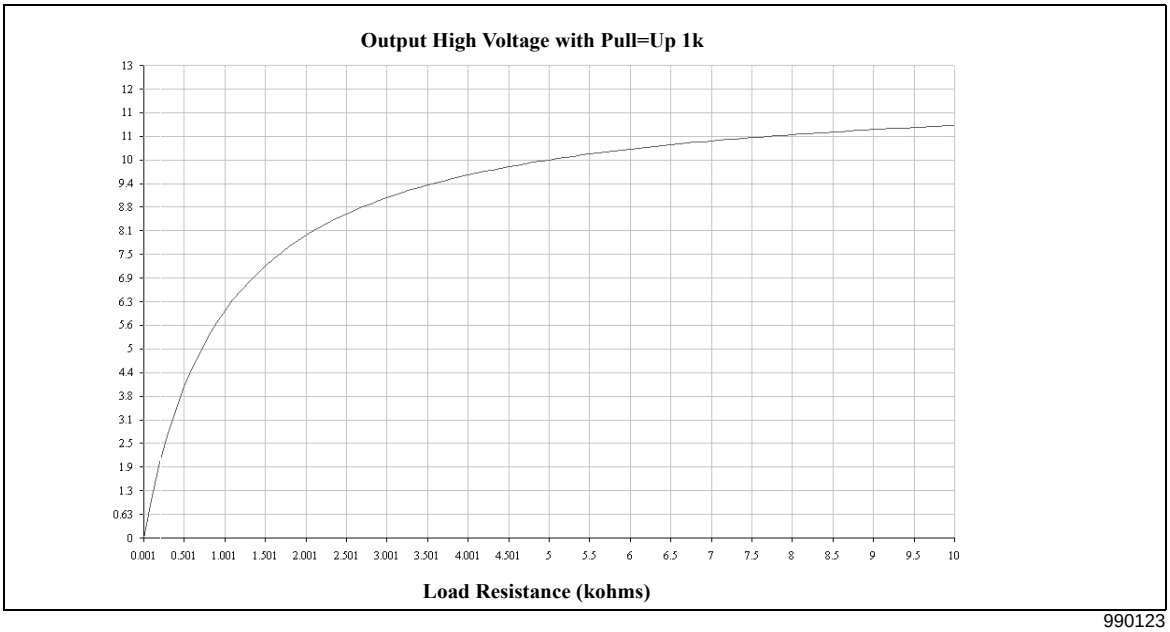

990123

Figure 4-5. NUF3902: Output High Voltage versus Load Resistance

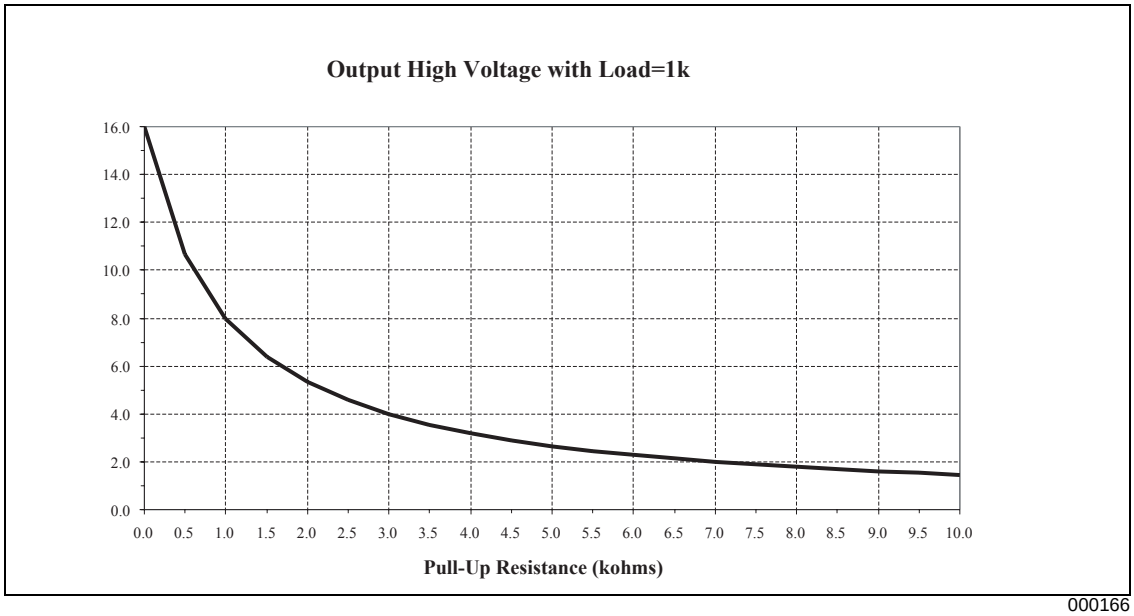

000166

Figure 4-6. NUF8006: Output High Voltage versus Pull-up Resistance

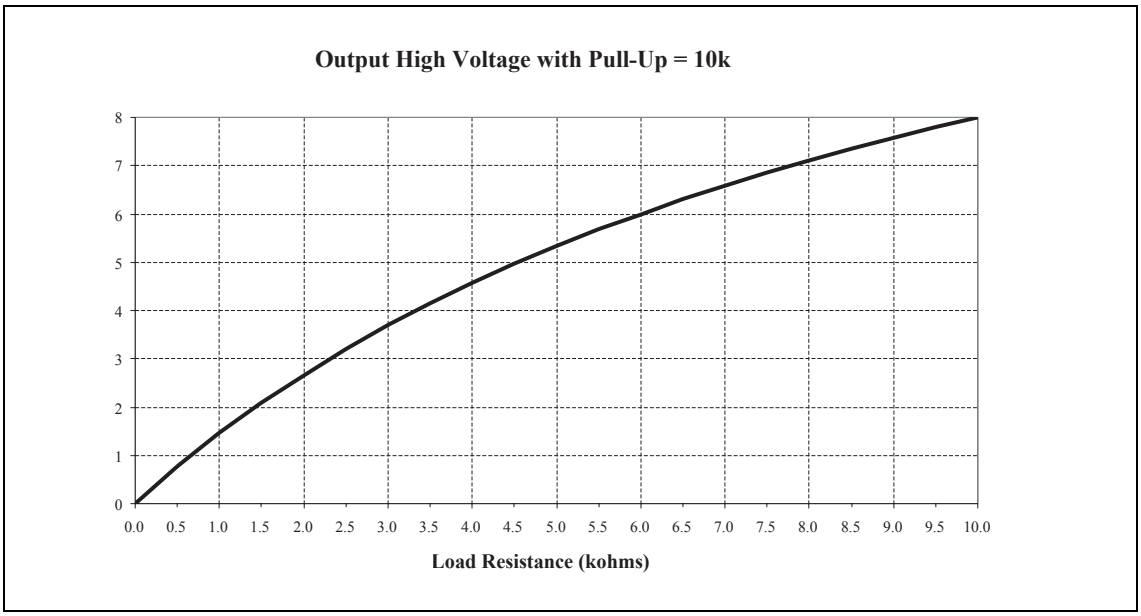

000167

Figure 4-7. NUF8006: Output High Voltage versus Load Resistance

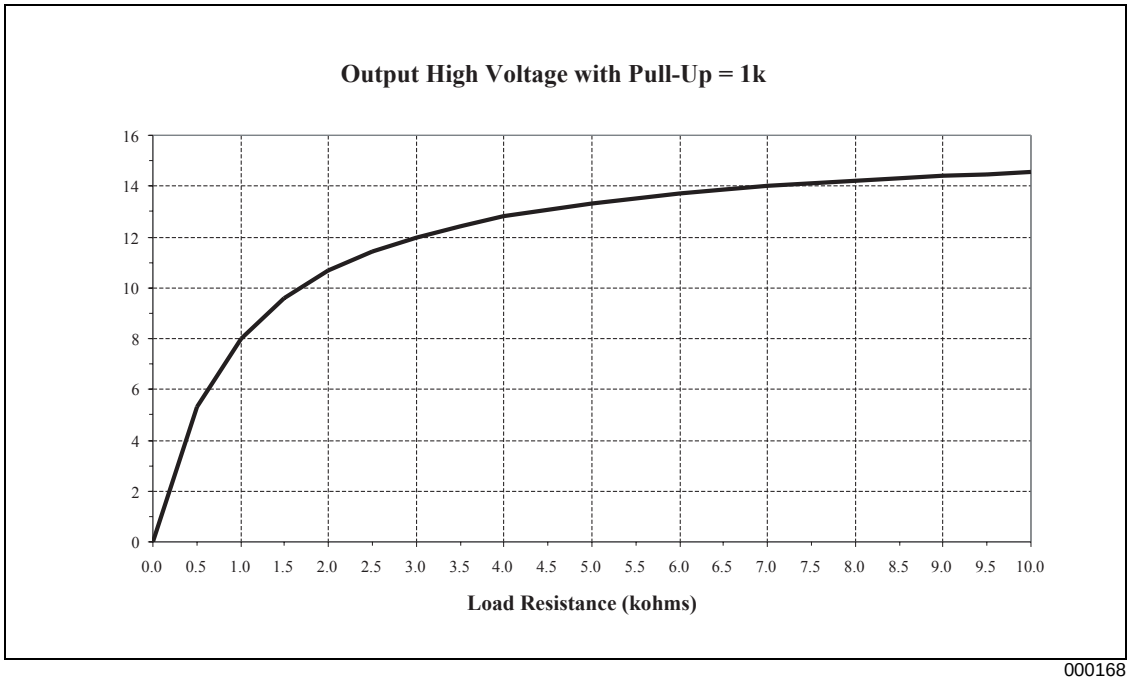

000168

Figure 4-8. NUF8006: Output High Voltage versus Load Resistance

Resistor Sizing Example

In order to size the pull-up resistor properly, you must know the above parameters. The following example demonstrates a suitable procedure for sizing the resistor.

System specifications:

V_{PU}+ = 12V

V_{OHmin} * = 10V

R_L = 10 kohms

+ V_{PU} = pull-up voltage.

*V_{OHmin} = Minimum voltage allowed on the output in the high state.

First, you must determine the current required by the supply voltage in the high state. The minimum load current in the high state, I_{Lmin}, is given by:

ILmin = VOHmin / RL = 1 mA

From this, determine the value of the pull-up resistor. Use the worst case condition of 10V along with the value of I_L determined above.

RPU = (12V - 10V)/ ILmin = 2000 ohms

This is well above the absolute minimum of 480 ohms determined above, thus you will not encounter current sink problems. If better V_{Ohmin} performance is desired, this value can be lowered, with a lower bound given by the equation above.

This value for R_{PU} can be cross checked to see if the system specifications can be met. From the graph in Figure 4-3, with a pull-up of 2000 ohms, the V_{OHmin} will be approximately 10V, thus the specification is met.

Now that you have determined the value of the pull-up resistor, you must determine the required power rating of the pull-up resistor. This is governed by the pull-up voltage and the current passing through this resistor when the output is in the low state.

$P = (V_{PU}) * (V_{PU} / R_{PU}) = 72$ mW

From the above values, it would be recommended to use a maximum value resistor of 2000 ohms with a 125 mW minimum power rating.

High Voltage Input/Driven Output Circuit

You can configure two of the programmable I/O lines, **HVIO_6** and **HVIO_7**, as high voltage inputs or high current source driven outputs.

Figure 4-9 diagrams the High Voltage Input/Driven Output circuit. All relevant signals are depicted.

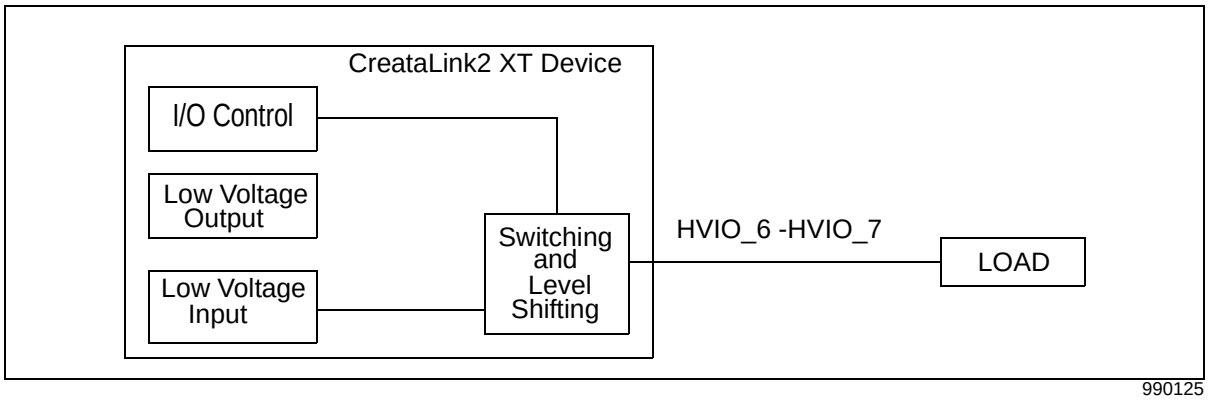

Figure 4-9. High Voltage Input/Driven Output Circuit

Current Source Limitations

The driven output signals are capable of sourcing and sinking significant current to their corresponding loads. Each of these two signals are capable of sourcing/sinking up to 350 mA. Currents higher than this could cause permanent damage to the circuit. The output high voltage provided by these two pins is approximately equal to the voltage provided to pin 1 of the data transceiver's 22-pin connector. Thus, any unwanted noise on this line must be filtered before it is connected to the CreataLink2 XT device, or on each individual output pin. When you design the power supply for the CreataLink2 XT device, take into account these two I/O pins' output current.

Effect of I/O on Operating Current

The specification for the CreataLink2 XT device transmit current is 1400 mA. However, if an application is to use the parallel I/O capabilities, this number could nearly double. As a result, you should take into account the I/O when you design the system power supply.

Open Collector I/O

As noted earlier, the open collector lines are capable of sinking 25 mA each. This current comes from the pull-up voltage, which may or may not be the same supply voltage as that applied to pin 1 of the 22-pin connector. If this is the same supply voltage as the primary supply voltage applied to the CreataLink2 XT device, then you must account for this current.

Worst case occurs when all six open collector outputs are driven low and are sinking the maximum allowable current of 25 mA. This could result in as much as 150 mA additional to the 1400 mA transmit current.

Driven I/O

If the driven outputs are each sourcing their maximum current of 350 mA each, then 700 mA must be added to the 1400 mA transmit current.

In the worst case, the CreataLink2 XT device is transmitting, while sinking the maximum allowable for the open collector outputs, and sourcing the maximum allowable with the driven output. This could bring the maximum peak current to 1400 + 6*25 + 2*350 = 2250 mA. SmartSynch, Inc. recommends at least a 2.5A supply in this case.

The I/O current is a constant current and does not go down when the CreataLink2 XT device is placed in the sleep mode. In this case, the worst case sleep current would be 5 + 6*25 + 2*350 = 855 mA, with no valid RS-232 voltages present.

RX_Active and TX_Active Signal Behaviors

ReFLEX is a half-duplex, TDMA signalling protocol which means that the data transceiver can either receive or transmit but not simultaneously. The TDMA aspect means that the system uses time slots for synchronization in a manner similar to a GSM system. In a ReFLEX system, the base timeslot is a 1.875 second time slice, referred to as a frame. The data transceiver will wake up at the beginning of a frame to listen to the channel and determine if there is a message in that frame intended for that data transceiver.

In order to provide a lower average current, a method has been developed which allows the receiver to be powered off for portions of time. A parameter named Battery Save Cycle or Frame Collapse is provided which determines how often the data transceiver has its receiver powered up. The data transceiver will power up its receiver every $(1.875 * (2^{Collapse}))$ seconds. For example, if the collapse is set to 3, then the data transceiver will power up its receiver every 8 frames or 15 seconds to look for a message. Each time the receiver is powered up, the RX_Active signal is activated. When the receiver is subsequently powered down, the RX_Active signal is correspondingly deactivated.

There are two scenarios resulting from the use of the battery save cycle. See Figure 4-10 illustrating the state of the RX_Active signal and receiver powerup state.

Scenario 1:

The data transceiver powers up its receiver and there is no message being delivered. In this case, the receiver will only be powered up for a small part of the entire frame.

Scenario 2:

The data transceiver powers up its receiver and a message is being delivered. In this case, the receiver is left powered up long enough to receive the message.

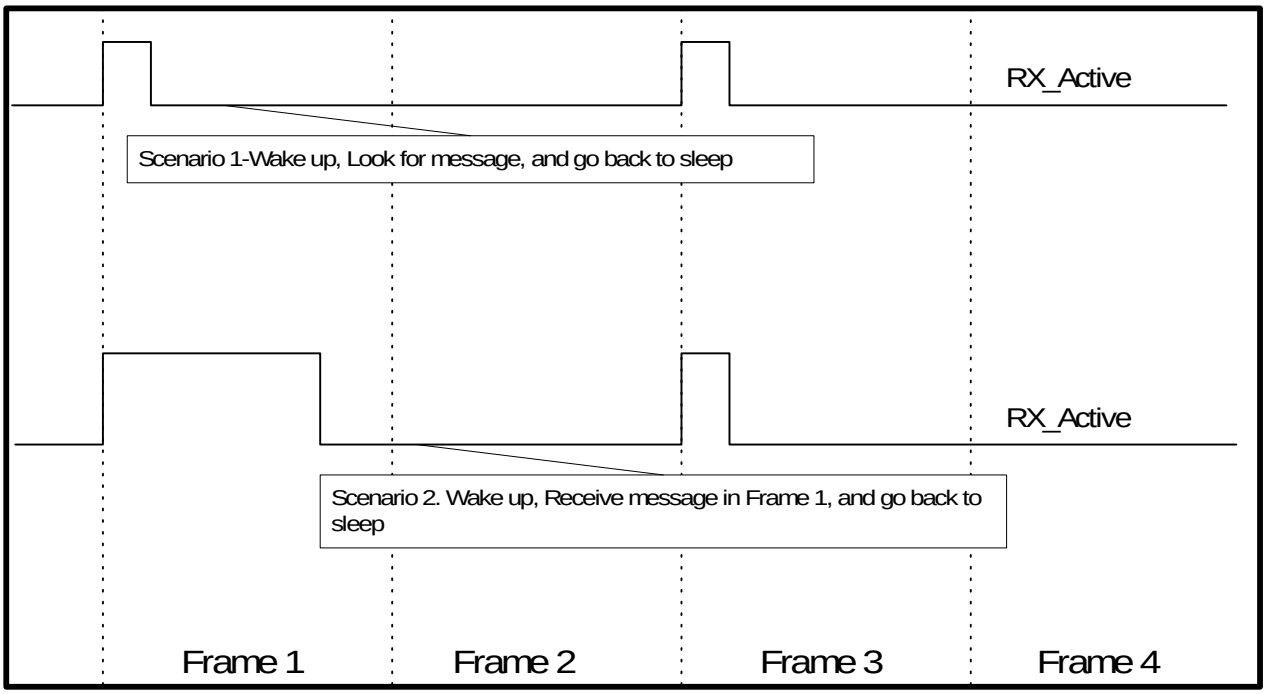

Figure 4-10. Behavior of Receiver Active Line. Assumes collapse is 1 (Wake up every other frame)

A third, but unrelated, scenario which causes the receiver to be powered up is the initiation of a transmission. The ReFLEX protocol requires that the data transceiver be receiving at the start of the frame where a transmission will occur to ensure synchronization to the system before it transmits. In this case, even if the data transceiver is operating with a collapse of 3 where the data transceiver only wakes up every 8 frames, the receiver will be powered up before a transmission.

The behavior of the TX_ACTIVE line is similar. When the data transceiver is actively transmitting a message, the TX_Active signal is activated. When the transmission subsequently completes, the TX_Active signal is deactivated.

Since the data transceiver must power up the receiver to synchronize before a transmission, in all cases where a message is either received (and must be acknowledged) or transmitted (and an acknowledgement will be received), there will be a pairing of RX_Active and TX_Active signal activations. The amount of time that the signals are active is dependent upon the amount of data transmitted. It is possible for the data transceiver to both receive a message and transmit within the same frame.

For most transmissions, the data transceiver must first transmit a system message indicating a need to transmit to the system. The system will return a system message to the data transceiver indicating in what frame and timing to begin its transmission. Therefore, there will be a series of RX_Active and TX_Active activations and deactivations when a message is being transmitted by the data transceiver.

For messages transmitted using the TransmitShort CLP command or Transmit Aloha Packet API call, the data transceiver is not required to obtain transmission timing information from the system and can schedule its own transmission. In this case, there will be a single RX_Active and TX_Active activation and deactivation.

Some possible combination RX_Active/TX_Active scenarios are shown in Figure 4-11.

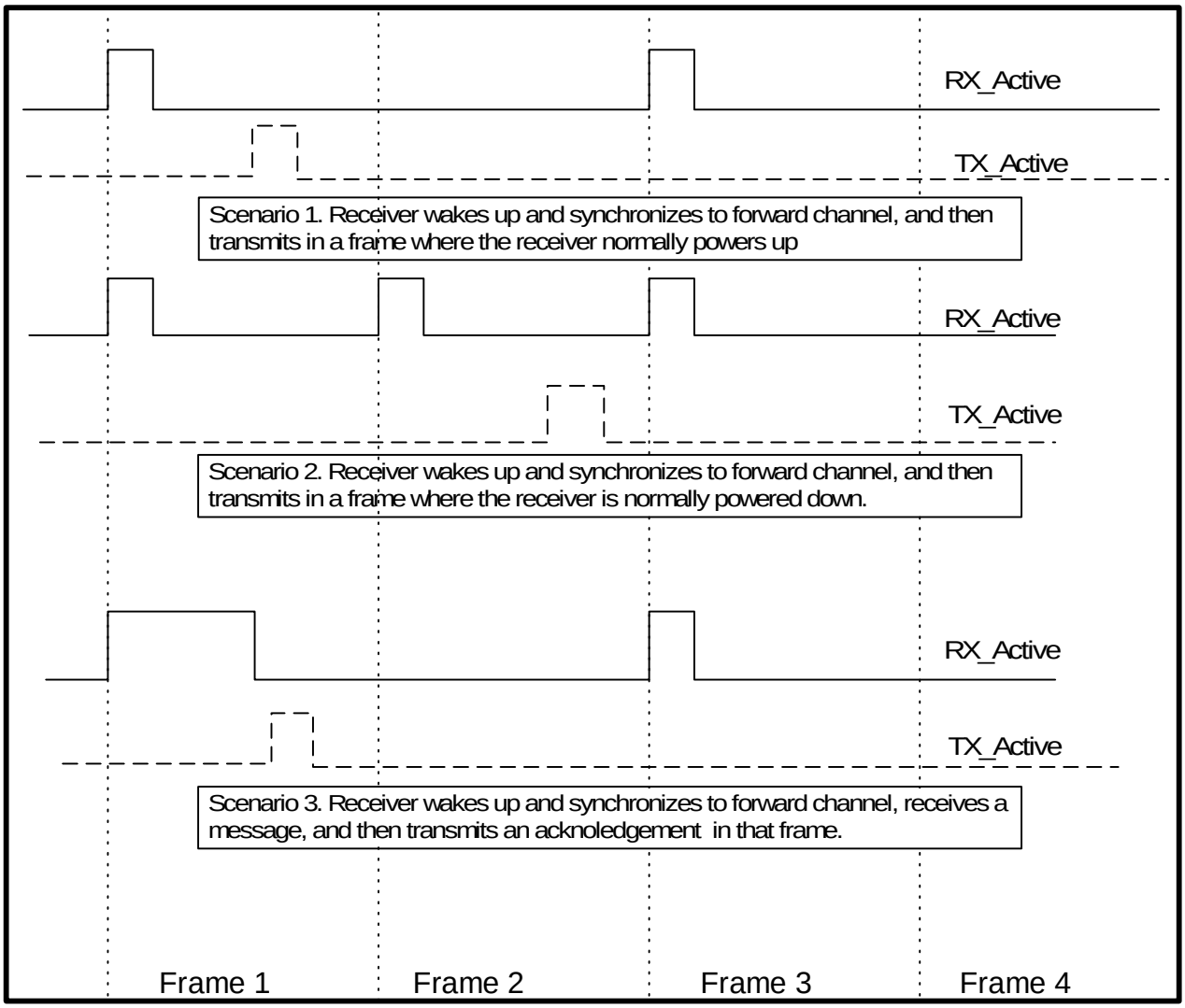

Figure 4-11. Assumes collapse is 1 (Wake up every other frame)

JTAG Communication Port

Table 4-2 shows a cross-reference between the signal names and the corresponding pin numbers on the data transceiver's 8-pin JTAG connector.

Table 4-2. 8-Pin Vertical Header Connector Pin Signals

Pin Number	Signal Name	Description
1	**B++**	ICE power source
2	**TMP1**	Mode select
3	**ARM_TDI**	JTAG Data in
4	**ARM_TRST**	JTAG reset
5	**ARM_TCK**	JTAG clock
6	**GND3**	Ground
7	**ARM_TDO**	JTAG Data out
8	**ARM_TMS**	JTAG I/O

8- and 22-pin mating connector part numbers are listed in "Part Numbers".

Power Connection

The host must provide power to the data transceiver as follows.

NUF3902: 5 Vdc to 12 Vdc

NUF8006: 5 Vdc to 16 Vdc. For NUF8006 current usage, see Table 2-3 and Figures 2-3 through 2-5.

All values in Tables 4-3 and 4-4 are approximate.

Table 4-3. NUF3902 Current Usage[a]

Current	Transmit	Receive	Sleep
Typical	1150 mA	65 mA	3-4 mA
Maximum	1400 mA	90 mA	5 mA

a. CreataLink2 XT device operating currents only. I/O and RS-232 currents must be added in to determine worst case values.

Table 4-4. NUF3902 Transmit Output versus Supply Current

TX Power	0.5 W	0.75W	1.0W	1.5W	2.0W
Supply Current	0.61A	0.71A	0.81A	1.01A	1.17A

The numbers above reflect only the normal operating currents for the NUF3902 and NUF8006 CreataLink2 XT devices. If the parallel I/O port and RS-232 port are to be used, the current draw due to these circuits must be included.

- The I/O port consists of six input/open collector outputs, and two input/driven output lines. Worst case current occurs when the open collector lines are configured as outputs and are driven low, while the driven outputs are driven high. Each open collector output is capable of sinking 25 mA. Each driven output is capable of sourcing 350 mA. Assuming these worst case values, an additional (6 * 25) + (2 * 350) = 850 mA is possible.
- RS-232 communication requires 3-4 mA of supply current when valid RS-232 signal levels are present. There are two methods to eliminate this current.

  1. Use TTL voltage levels, and connect to pin 3 and pin 7 of the 22-pin connector.
  2. Or, if RS-232 communication is a requirement, disable the host system's RS-232 transmitter when serial communication is inactive.

You must consider these specifications when you design the power supply. The above scenario is a worst-case. Current usage varies based on operating modes and I/O configuration.

You can adjust average current by selecting a custom battery save cycle option.

Power Management

Make power and ground electrical connections via the 22-pin connector. Minimize cable length to limit the voltage drop across the cable during RF transmissions.

The host must provide continuous dc power to the data transceiver. It resets if the power source is interrupted. The data transceiver uses the built-in power-saving capability of the ReFLEX protocol that enables it to spend the majority of the time in the sleep mode.

States of Operation

The host power supply provides source current to the data transceiver. There are four data transceiver power consumption states:

- Off—The data transceiver is off, or the host-supplied power has failed.
- Sleep—The processor is sleeping and wakes up to an interrupt, but the RF section is off.
- Receive— The processor is actively processing information. The RF sections are on and demodulating data.
- Transmit—The processor is actively processing information. The RF sections are on and transmitting data.

The data transceiver automatically powers up and enters the sleep or receive state when supply voltage is applied.

Power Profile

Network Configuration System/Data Transceiver Battery-Save Cycle

Both the network configuration and the data transceiver configuration affect the percentage of time the CreataLink2 XT device spends in the sleep and receive states. In a two-way paging network, the battery-save cycle is a configuration parameter stored in the data transceiver and defined for the overall system.

Assume the system battery-save cycle parameter is 'n' and the data transceiver battery-save cycle parameter is 'm'. The data transceiver typically wakes up to receive messages every 2^m frames, where a frame takes place every 1.875 seconds, and the network schedules transmissions to the data transceiver at the times when it is awake to receive.

In situations where the outbound network loading is such that data transceivers are required to be awake more often, the system can dynamically modify data transceiver behavior. It can broadcast a system battery-save cycle that causes all data transceivers to wake up for the lesser of every 2^n frames or every 2^m frames.

For example, if the mode battery-save cycle parameter is 3 and the system battery-save cycle parameter is 7, then the data transceiver would wake up every 2^3, or 8 frames, and then revert to a sleep state. If the network determines that all data transceivers on the network need to be awake more often, the network could broadcast a system battery-save cycle parameter of 1. All pagers would respond by waking up every 2^1, or 2, frames to receive data. Once the system loading was reduced, the network could broadcast a system battery-save cycle parameter of 7, and the data transceivers would react by falling back to their own internal battery-

save cycle parameter. Consult your network provider to determine current network parameters.

During frames when the CreataLink2 XT device is in receive mode, the receiver only stays powered through part of the frame, unless the frame contains a message for the CreataLink2 XT device.

Message Traffic Model

The message traffic model defines the number of messages transmitted and received, and the average length of the messages sent and received in a given work day. A dispatch application might have a message traffic model as follows:

- Messages transmitted in 8-hour day = 5
- Average length of transmission = 1 kbytes to 2 kbytes
- Messages received in 8-hour day = 10
- Average length of received message = 100 bytes to 200 bytes

This analysis of message traffic provides the power consumption profile assessment in terms of percentage of total time spent transmitting, receiving, and sleeping.

Use of Information Services

Some applications, such as a stock quotation broadcast service, require the use of information services carried to the data transceiver via additional addresses (IDs). Each active service address, in addition to the data transceiver factory-loaded personal address, increases the percentage of time the data transceiver stays in the receive state, and increases the overall current consumption. However, this addressing type provides a method by which to address a group of CreataLink2 XT devices.

Backup Battery Power/Transmitter Power

The undervoltage reset circuit of CreataLink2 XT device senses a low voltage condition almost instantaneously. In an undervoltage condition, the data transceiver is reset, and all information in RAM is lost, including any unread messages or pending message transmissions. A backup battery connected across pins 5 and 6 of the 22-pin connector can prevent this loss. For RAM backup only, this voltage is required to be at least 3 Vdc and a maximum of 9 Vdc.

In addition, you can connect pins 5 and 6 to a power source for use during RF transmissions and while receiving. If these pins are to be used for this purpose, then the requirements for the voltage on this pin change. For RF transmissions to occur reliably, a voltage in the range of 5 Vdc minimum to 9 Vdc maximum must be applied. This power source will be required to source as much as 1.4A during RF transmissions.

Power Supply Circuit Details

You are responsible for supplying power to the data transceiver. Certain specifications must be met to ensure proper operation.

The data transceiver accepts the following range of power supply voltages applied to pin 1 (Supply) of the 22-pin connector:

NUF3902: 5 Vdc to 12 Vdc
NUF8006: 5 Vdc to 16 Vdc

The following additional specifications must also be met (see Table 4-5, Figure 4-1, and Figure 4-2).

Table 4-5. Power Supply Specifications

Item	NUF3902	NUF8006
Supply ripple–Vpp	100 mV peak-to-peak maximum up to 5 MHz	
Open circuit voltage–Voc	12 Vdc maximum	16 Vdc maximum
Rise time	500 µs or less (from 80 mA to 1400 mA)	
Minimum voltage and current	5Vdc at 1.4A (without driven output current)	

The voltage range described in Table 4-5 is available in the integrator's host system in most applications. If the voltage is not available, use a regulator to ensure that the supply voltage is 5 Vdc. Select the regulator based on the input voltage and current-sourcing capabilities.

Switching regulators are efficient, but they introduce unwanted noise into the system. If you use a switching regulator, the filtered output should meet the supply ripple specification.

Linear regulators supply a clean dc voltage but are inefficient. It is your choice whether to use a linear or switching regulator.

A linear regulator is easier to integrate because of the quiet output.

Shutdown Procedures

If the host application turns the data transceiver off for any period of time, SmartSynch, Inc. recommends that you send a reverse path message to the application host or server indicating that the data transceiver is no longer available. This prevents a failed message from being sent to a data transceiver that is powered down. At power-up, send a message to the application server indicating that the data transceiver is ready to receive messages.

Resetting the Data Transceiver

There are three ways to reset the data transceiver:

- Remove and reapply power
- Issue the Set Power CLP command to the ON state. This results in a software-generated reset (see *Communication Linking Protocol Reference Manual*) or use the equivalent API call for on-board/embedded applications.
- Use the **RESET_ENABLE** and **EXT_RESET** pins on the 22-pin connector (first set **RESET_ENABLE**/pin 9 high, then set **EXT_RESET**/pin10 low). After reset, set the pins back to their original state, or the device will remain in reset.

Antenna Systems

This chapter describes how to select an antenna and incorporate it into a product package. It is not within the scope of this document to include answers to questions for every possible application. SmartSynch, Inc. recommends that you consult an antenna design engineer to address individual application concerns.

Antenna Safety

When you design the antenna for a product that integrates the CreataLink2 XT device, adhere to the following American National Standards Institute (ANSI) safety criterion:

The design of the integrated product must be such that the location used and other particulars of the antenna comply with the then current American National Standards Institute (ANSI) Guidelines concerning radio frequency energy exposure and with any other nationally recognized radio frequency standards that may be applicable thereto.

Antenna Selection Criteria

Be aware of the fact that antenna selection, mounting, and location has a major impact on communication performance. Bad antenna selection, mounting, or location can result in very poor system communication performance.

The following are guidelines for good antenna selection:

Frequency range	896 MHz to 942 MHz band minimum
Polarization	Vertical
Gain	0 dBi to +3 dBi
Normal Impedance	50 ohm
VSWR	1.75:1 maximum in the specified frequency range

It is recommended to use an antenna with a ground plane.

It is not recommended to use a high gain antenna for two reasons:

1. The Base Station transmitter and Base Station receiver are not collocated. They may be in opposite directions.
2. By using a high gain antenna, you may be exceeding the FCC radiated emissions limits.

Antenna Mounting

1. It is not recommended to connect the antenna directly to the CreataLink2 XT.
2. Connect the antenna to the CreataLink2 XT using RG58/U coax cable (or equivalent) of at least 3 feet in length.
3. Do not mount the antenna in close proximity to other antennas. Try to stay as far away as practically possible. Separation of antennas must be at least three feet. It is recommended to mount different antennas one above the other rather than one besides the other. Coupling between vertically polarized antennas is minimal in the vertical direction.
4. For fixed wireless outdoor applications, mount the antenna as high as practically possible. Stay away from objects, especially metal objects.
5. For fixed wireless indoor applications, you must search for the best location. As a general rule of thumb, mount the antenna four feet above the floor. Stay away from walls, and try to mount the antenna in front of an external window.
6. For vehicular applications, you must purchase an antenna that is designed to be mounted in vehicles and meet the specific requirements listed in the Antenna Selection Criteria. Follow the antenna manufacturer's instructions for antenna mounting.

Antenna Location

Finding the best location for the antenna is critical for overall system success. It is especially critical in indoor application. You must search and find the best antenna location that will result in successful communication.

Antenna Test Methods

The antenna performance must meet the impedance and match the criteria of the data transceiver specification, and have the gain to meet the network ERP requirements.

Perform the following two antenna tests to ensure the antenna meets requirements. Integrate the antenna in its final form for both tests:

Impedance Match Test

Measure and verify that the nominal impedance and resulting VSWR, or return loss, are within specifications (See Table 2-6).

Gain Test

Measure the gain with a test facility to ensure the ERP and pattern ripple are acceptable. Pattern ripple is the gain deviation measured in a 360 degree polar plot. A typical polar plot is shown (see Figure 4-12). The antenna could have 3 dB gain in one direction and zero gain in another. If the average gain is 1.5 dB, the ripple is +/- 1.5 dB. Ripple is the measure of uniformity of gain. Most networks specify a nominal gain and an allowable ripple.

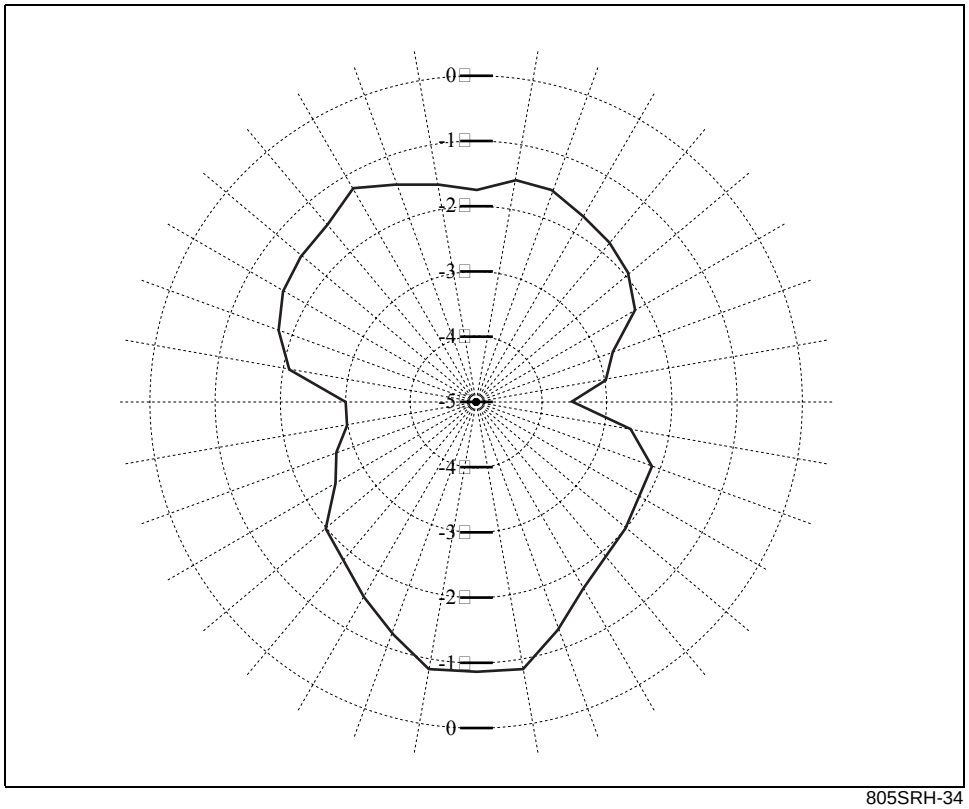

805SRH-34

Figure 4-12. Polar Plot Graphic

Hardware Recommendations

An optional external antenna is available from SmartSynch, Inc. (see Table 6-1), or the customer can supply the external antenna. The specifications for this SmartSynch external antenna are listed in Table 4-6.

Table 4-6. External Antenna Specifications

Property	Description
Type	Low profile with radome
Transmit frequency	896–902 MHz
Receive frequency	929–941 MHz
Impedance	50 ohms nominal
VSWR	1.5:1 maximum
Polarization	Linear, vertical
Gain	0 dBi
Maximum power	5 watts continuous
Coaxial cable	6-foot long RG58/U, with SMA male connector

Antenna Connector

The data transceiver connector is a standard female SMA connector. The mating connector should be a standard male SMA connector.

Antenna Cable Assemblies

A variety of coaxial cable types can be used with standard male SMA connectors. Use a double-shielded coaxial cable in noisy RF environments to provide the necessary isolation from interference. In applications that require more than six feet of coaxial cable, use a low loss coaxial cable.

Antenna Assemblies

The SmartSynch, Inc. external antenna assembly is a low-profile, omnidirectional antenna that has six feet of double-shielded coaxial cable and a male SMA connector. The antenna performs best with an additional ground plane approximately eight inches in diameter, with the antenna centered.

Antenna Dealers

Recommended antenna dealers are listed in Table 4-7.

Table 4-7. Antenna Dealers

Dealer	Phone Number
Micro Pulse, Inc	(805) 389-3446
Northpoint Communication Products, Inc.	(919) 403-8598
Larsen Electronics, Inc.	(800) 426-1656
Centurion International, Inc.	(800) 228-4563

Battery Selection Criteria

This chapter provides an overview of the current state of available battery technologies, and some considerations for applying battery technology to a packet data product. Use batteries only if line power is unavailable.

Select a battery, based on the following factors:

- Cell size
- Internal impedance
- Charging requirements
- Susceptibility to common battery phenomena, such as memory effect or overcharging

Available Technologies

The four prevailing battery technologies are:

- Nickel-Cadmium (NiCd)
- Nickel-Metal-Hydride (NiMH)
- Lithium Ion (Li-ion)
- Lead-Acid

Nickel-Cadmium

NiCd characteristics are as follows:

- Most mature technology
- Lower energy density (energy/volume) than NiMH or Li-ion
- Available in all cell sizes, including AA, 2/3A, 4/5A, A, 4/3A. This represents the largest number of packaging options.
- Exhibits a memory effect when not discharged below the lower extent of its operating voltage. The memory effect reduces the usable capacity of each battery cell.
- Internal impedance of 25-30 mΩ for each 1.2V cell
- Cell voltages are 1.2V, with multiple cells used to obtain higher operating voltages.
- Can withstand high current pulses that are characteristic of packet data applications
- Typical charge method is -ΔV (known as negative delta voltage). Negative delta voltage means charging the battery while waiting for the battery voltage to peak and enter a slight overcharge condition, where the voltage actually begins to decrease prior to terminating battery charging. NiCd is the most robust battery technology available today for non-vehicular applications. NiCd withstands overcharging, over-discharging, and harsh environments with reasonable resilience.
- Raw battery cells or battery packs can be purchased from suppliers.
- Typical operating temperature range is –20° C to +50° C

Nickel-Metal-Hydride

NiMH characteristics are as follows:

- Reasonably mature technology with potential for improvements in battery chemistry and energy density during the next five years
- Higher energy density than NiCd, but lower than Li-ion
- Available in standard sizes AA, 2/3A, 4/5A, A and 4/3A and some prismatic (rectangular) configurations

- Exhibits the memory effect in a manner similar to NiCd technology, but at a less pronounced level
- Internal impedance of 35–49 mΩ for each 1.2V cell
- Typical cell voltages are 1.2V, with multiple cells used to obtain higher operating voltages.
- Earlier NiMH battery chemistry was damaged by high current discharge pulses. This problem has been eliminated in recent battery chemistry. When purchasing batteries of this type, determine if high current pulse discharging is a concern.
- Typical charge method is dT/dt, where T is temperature. As the battery reaches full charge, any further energy dissipates as heat. A temperature threshold terminates the charge cycle in conjunction with voltage monitoring. NiMH is more sensitive to overcharging that NiCD and exhibits decreased capacity if repeatedly overcharged.
- Raw battery cells or battery packs can be purchased from suppliers.
- Typical operating temperature range is –10° C to +50° C.

Lithium-Ion

Li-ion characteristics are as follows:

- Less mature technology
- Higher energy density than either NiCd or NiMH
- Most suppliers do not sell cells, but force customers into particular solutions through their battery pack designs. Due to cell lead times, purchasing cells to design a battery pack could be a problem.
- Li-ion does not exhibit the memory effect and is not affected by partial discharging charging cycles.
- Internal impedance of 100–150 mΩ for each 3.6V cell. Li-ion batteries are susceptible to damage due to over-discharge and high current pulses. Manufacturers recommend adding a protection circuit to battery pack designs. The resultant internal impedance of a battery pack with protection circuitry can reach the 500 mΩ level.
- Typical cell voltages are 3.6V with multiple cells used to obtain higher operating voltages.
- Li-ion batteries are very sensitive to over discharge and represent a hazard if not properly designed with protection circuitry.
- Typical charge method is constant voltage, constant current.
- Typical operating temperature range is –10° C to +50° C

Lead-Acid

Lead-Acid characteristics are as follows:

- Very mature technology
- Low energy density
- Standard cells are available, but not in flashlight sizes
- No memory effect
- Internal impedance of 10-20 mΩ per 2V cell
- Typical cell voltages are 2.0 Vdc with multiple cells used to obtain higher operating voltages.
- Typical charge method is to use a C/100 current source continuously on.
- Raw battery cells or packs are available.
- Typical operating temperature range is –30° C to +60° C.

Applying Battery Technologies

Review the following characteristics of packet data products when you consider different battery technologies:

Inconsistent Current Drain

When battery manufacturers specify the battery discharge profiles, they assume a constant current drain model. In a packet data system, the constant current drain model no longer applies. There are three levels of current drain states: sleep, receive, and transmit. The data transceiver cycles through these different states when powered and in contact with the network.

To determine the realistic battery life or capacity for the product, contact the battery manufacturer or experiment by transmitting for different lengths of time.

Peak Currents During Transmissions

Because transmissions are short, view the resulting current drain during transmissions as current pulses. Consider these pulses when you select the appropriate battery technology.

Consider the internal impedance of the battery at the peak currents during transmissions. This is when the largest voltage drop occurs across the battery terminals. Design an adequate supply guard band to ensure that the data transceiver and other circuitry in the final product are not reset during transmissions.

Messaging Model

To determine the product battery capacity, define the messaging model for the target market:

- Optimal number of hours by day, weeks, or months of use prior to recharge
- Number of messages transmitted per hour
- Number of messages received per hour
- Average length of transmitted messages

Use the information and the current drains of the data transceiver and other circuitry to define the requirements for battery supply voltage and capacity.

Smart Synch™

TESTING

Contents

Hardware Integration **5-1**
Equipment 5-1
Enabler Functions 5-1
Specific Tests 5-1
Desense and EMI 5-2
Application Software **5-3**
Software Driver Configuration 5-3
Network Configuration 5-3
Final Assembly **5-4**
Installation **5-5**
Installation Overview 5-5
Required Tools and Equipment 5-5
Installation Procedures 5-6
Troubleshooting **5-9**
End User Problem Resolution **5-10**
Service Depot Repair **5-11**
Screening 5-11

Hardware Integration

Follow relevant engineering standards, requirements, and specifications to ensure a proper integration effort. Functional tests performed during development validate that the integrated product performs as designed.

Equipment

Table 5-1 shows the equipment needed to test the data transceiver.

Table 5-1. Recommended Test Equipment

Item	Part Number/Description	Source
Communication analyzer	HP 8920A or HP 8921A with option 01 (high stability time-base oscillator) for taking test measurements	Commercial Item
Spectrum analyzer	2.9 GHz capability	Commercial Item
Protocol analyzer	HP 4959 or equivalent	Commercial Item
PC	486DX66 or equivalent with 9-pin serial port	Commercial Item
Power supply	HP E3610A	Commercial Item
Oscilloscope	500 MHz, digital storage	Commercial Item
Digital multimeter	Standard range	Commercial Item

Enabler Functions

To test the interaction between the data transceiver and host, include the following features:

- The capability to turn on and off the various host hardware components. This capability helps to isolate possible desense and other emissions problems.
- The capability to pass information through the host between the data transceiver and the test platform. This enables external programming and configuration software to communicate with the data transceiver while integrated with the host. For microprocessor-based products, accomplish pass-through mode via software emulation that involves the host processor, and passes full-duplex serial port information to and from the integrated data transceiver.

Specific Tests

In addition to various tests that exercise your own circuitry (such as power-on self-test), you must design tests that ensure proper interaction between the data transceiver and the host. The following require evaluation:

- RF immunity—Ensure the RF transmissions of the data transceiver do not interfere with operation of the host.
- Electrical signaling—Ensure the power sources and interface are functionally compatible between the host and the data transceiver.
- Physical parameters—Ensure the physical configuration of the data transceiver provides adequate ventilation, mounting, shielding, and grounding.

- Antenna performance—Ensure the integrated antenna system meets the required ERP specifications, VSWR specifications, and antenna propagation patterns.
- ESD requirements—Ensure the host design protects the data transceiver from electrostatic discharge.
- RF Re-radiation—Ensure the host does not allow spurious emissions in excess of 60 dBc, caused by carrier re-radiation.

Desense and EMI

Any device with which the data transceiver integrates can generate enough EMI to reduce the ability of the data transceiver to receive at certain frequencies.

The ability to turn on and turn off various circuits in the data receiving device provides identification and analysis of the components that cause desense. This approach to desense troubleshooting can shorten the integration effort. It is critical that you consider the data transceiver shielding early in the design phase.

Application Software

The data transceiver resides between the application and the network. Tests need to verify the communications links between an external host and the data transceiver and between the data transceiver and the network.

Software Driver Configuration

This test verifies that the driver software and configuration are such that the external host and data transceiver serial port can communicate with each other.

Network Configuration

Determine if the application can use the data transceiver to communicate with a two-way paging network. This test uses existing network software to communicate with a specific network.

To ensure that the final application is able to respond correctly under all adverse network conditions, the application software needs systematic testing against all possible failure and exception conditions. Low battery, out of range, host down, unexpected data, maximum message size, and maximum peak/sustained throughput must not cause the host application to fail. Each condition must have a specific remedial action.

Final Assembly

Before any product is shipped, a final assembly test should be performed to ensure that all components are working properly and have been checked for loose connections and proper software load. In this test, the data transceiver sends and receives messages to itself or another data transceiver or two-way pager of the size used in the application. Successful return of the message demonstrates that the product is able to transmit and receive correctly.

Installation

This chapter describes how to install the CreataLink2 XT device. Procedures are for basic external antenna installation.

Installation Overview

The data transceiver is a small, easy-to-operate product that requires comparatively little space. Installation requires common tools and equipment (see Table 5-2). A dimensional drawing is provided (see Figure 5-1).

Follow the installation procedure and guidelines as specified. Failure to follow directions could cause the unit to function improperly and/or cause the unit to become non-compliant with FCC regulations.

- Mount the unit in an area that is as free of EMI as possible; away from noisy digital supplies and controllers. Do not mount the unit near metallic objects, or where it would be subjected to constant vibration.
- Ensure that the voltage supply is well-regulated; free from excessive ripple and voltage spikes. The ripple specification is 100 mV peak-to-peak up to 5 MHz. The voltage supply should not drop below 5V for transmit/receive capability.
- Mount the external antenna in such a way as to prevent people coming within twelve inches of it, per FCC RF hazard regulations.

Required Tools and Equipment

The tools and equipment required for installation are listed in Table 5-2.

Table 5-2. Tools and Equipment List

Item	Type	Purpose/Use
Drill and Bit	Drill with .138-inch (#28) drill bit	To drill holes in mounting surface for data transceiver.
	1/2-inch drill bit	To drill holes for external antenna (PTAF1001A).
Mounting Standoffs	4 Richco Standoffs p/n SCBSM-3-01 and nuts p/n HN6-32-01 (or some other standoff to mount in 0.128- inch PCB holes).	To connect data transceiver to mounting surface. End-user can design a different mounting scheme for integrating PCB assembly into the end product.
Wrench	3/4-inch open-end	To tighten optional external antenna mounting nut to antenna.
Template	Provided	To mark mounting surface for data transceiver locating holes (see Figure 5-1).

Installation Procedures

Ensure that there is no door opening and closing interference before you mount the CreataLink2 XT device, if applicable.

Mounting

Mount the data transceiver to a rigid, flat surface using 4 standoffs or customer-developed enclosure appropriate for environment (i.e. maintaining temperature around the board assembly to -40 deg. C to +85 deg. C and ensuring that condensation, and water/dust/salt fog intrusion does not occur).

External Antenna Assembly

1. Select a mounting surface that is as high as possible, flat, clean, and at least eight inches in diameter. For optimal antenna performance, the mounting surface should be metal.
2. Drill a 1/2-inch hole in the center of the mounting surface.

Drill the mounting surface hole close enough to the data transceiver location so that the cable can reach it.

Do not cut coaxial cable. Changing the length could degrade antenna performance.

Insert coaxial cable through the mounting surface hole until the external antenna lies flush on the mounting surface.

3. Install the lockwasher and mounting nut. Tighten to a snug fit with a 3/4-inch wrench. Do not overtighten.

CreataLink2 XT Data Transceiver Installation

Mount the CreataLink2 XT device using the following steps or develop your own enclosure appropriate for the end-use environment.

1. Use the dimensions given in Figure 5-1 (1.457 inches and 3.464 inches) to mark the mounting location. All the dimensions in Figure 5-1 are in inches.
2. Drill four 0.138-inch (#28 drill bit) mounting holes.
3. Position the CreataLink2 XT data transceiver and install the Richco Standoffs (or other equivalent standoffs to be inserted into the 0.128-inch PCB holes). Do not overtighten the hex nuts.

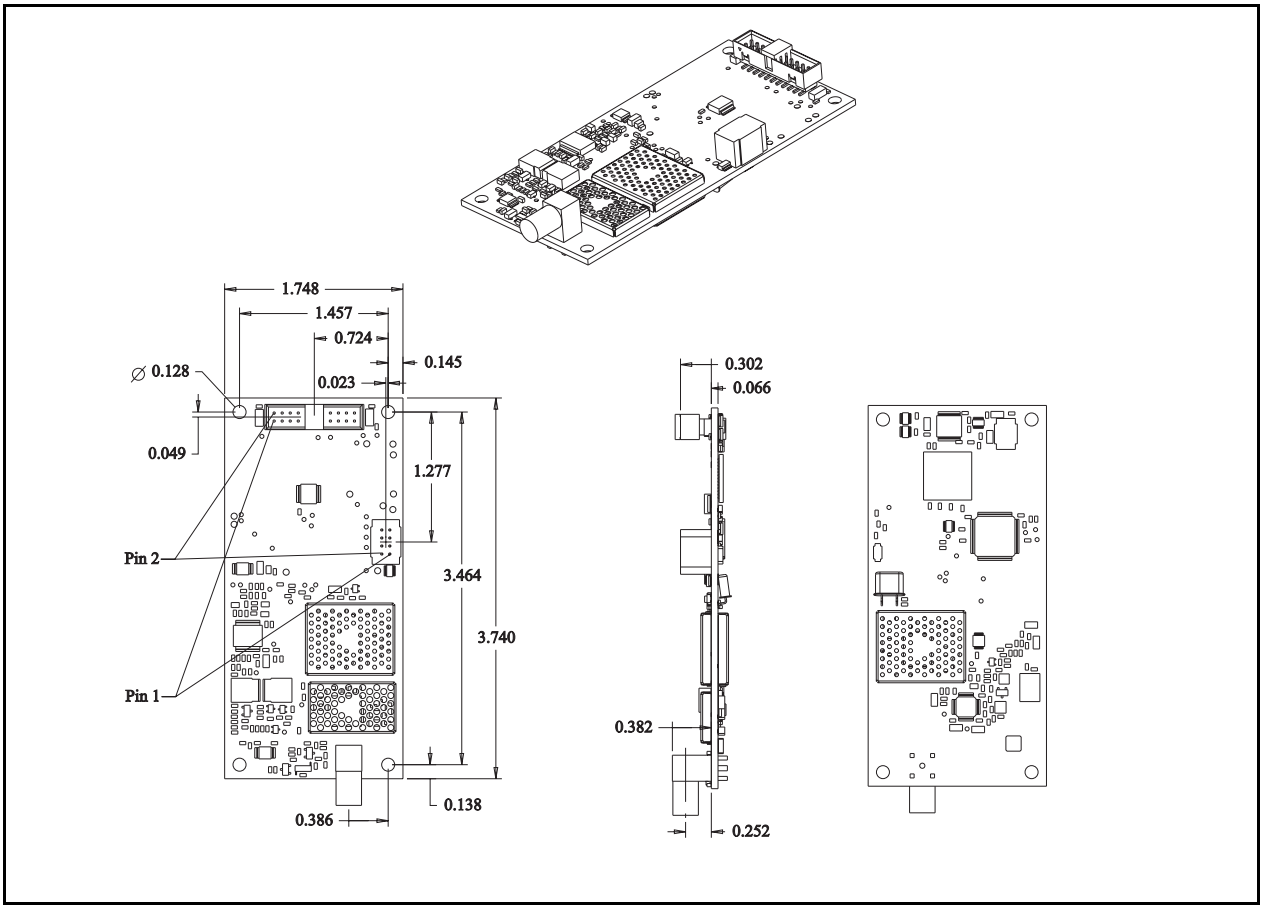

000162-O

Figure 5-1. Dimensional Drawing

Seat the SMA mating connector properly. Overtightening the connector could cause permanent damage to the data transceiver.

4. Connect the coaxial antenna cable to the data transceiver SMA connector. Tighten the cable connector at 4-8 in-lbs. of torque (i.e. finger-tight only) (see Figure 2-6).

Power, and Serial Cable Connection

5. Connect the cables and the power supply to the CreataLink2 XT board assembly for end-use (see Top of Figure 2-6).

Use a common ground between the CreataLink2 XT data transceiver power ground and the host machine.

Verifying the Installation

To verify that the data transceiver can receive and initiate messages, use the host system built-in test mode if available. If a built-in test mode is not available, use a palmtop or laptop computer with a test application to prompt the data transceiver to initiate and read messages. Use the following protocols:

- The host system initiates a message directed to another two-way communicator to verify network operation.
- The data transceiver initiates multiple messages to itself to verify the capability to send and receive messages.
- Initiate messages from the internet, e-mail, or another two-way communicator to the data transceiver.

Troubleshooting

Before you perform detailed troubleshooting, check for faults in the external power source, including fuses, circuit breakers, and interlocking safety switches (see Table 5-3).

Table 5-3. Troubleshooting

Problem	Fault Isolation	
No power up	1.	Check all interface cables for secure connections. Repair or replace as required.
	2.	Check 22-pin connector pin 1 for Supply voltage (NUF3902: 5-12 Vdc and NUF8006: 5-16 Vdc).
No serial I/O	1.	Check continuity of 22-pin connector at data transceiver connection.
	2.	Verify that the proper pins are being used for communication (pins 3 and 7 for TTL and 4 and 8 for RS232)
	3.	Check to see that a null modem type connection is being used for Rx/Tx serial communication
No transceiver over the air (OTA) communications	1.	Check registration status using proper CLP protocol command.[a]
	2.	If not registered, check out-of-range status using proper CLP protocol command.[a]
	3.	Check connection at antenna and connection at the CreataLink2 XT data transceiver SMA connector.
	4.	Make sure LED is blinking, indicating power
	5.	Check backup battery voltage/alternate power if used as transmit supply
	6.	Verify that your TX_SUPPLY in the codeplug is configured as desired

a. Refer to the *Communication Linking Protocol Reference Manual* listed in "Related Publications"

End User Problem Resolution

It is time-consuming and expensive to have a unit returned to the service depot when a temporary network or host outage may have caused the problem. Is the problem caused by the host application, data transceiver, network, configuration, or user error? Design the application to identify the source of end-user problems. This function can be designed with the guidance of SmartSynch, Inc. or the network operator.

Tests need to provide a systematic, positive acknowledgment from each of the network components:

- Data transceiver must be able to communicate with the external application device. If so, it will respond to a properly formatted Get Configuration CLP command.
- Data transceiver must be able to detect the network.

Issue a Get Status CLP command. If the status information indicates the unit is in range, the data transceiver is detecting the system. For on-board applications, a method of extracting service information must be provided.

At initial start-up, the data transceiver assumes that it is within range. It takes approximately four minutes to determine that it is not within range.

- Data transceiver must be registered and allowed to operate on the network.

Auto-Registration is disabled (default). Transmit a short message to another pager. Issue a Get Status CLP command and track the message progress until the message is delivered or fails to be delivered.

Auto-Registration is enabled. Issue a Get Status CLP command. If the status information indicates unit registration, the data transceiver can operate on the network.

- The host application must be up and running.

Identify the cause of the problem in the field. This avoids having to send the device to the service depot when the problem was not caused by the device. Design the application so that the end user can identify the most likely cause of the problem, and refer to a help desk for a quick solution.

Service Depot Repair

This chapter describes tests that you can perform on a unit that is sent to you for service. These tests were designed to help you determine the specific problem and decide whether to send them to SmartSynch, Inc. for repair. An end-to-end or loop-back test involves all elements of the network and the data transceiver.

Screening

Screening requires the following operational items:

- RS-232 cable/power supply
- PC or other device that supports the CLP
- A protocol analyzer to view communications between the data transceiver and the external device

The objective is to test the suspect unit in a known, stable environment in which all other components are known to be operational:

1. Connect the data transceiver to a PC or other device that supports the CLP, and apply power.
2. Determine if there is a serial problem with the data transceiver:
   - Issue the CLP Get Configuration command (see *Communication Linking Protocol Reference Manual* for more information).
   - The data transceiver responds to the command by sending a block of configuration information.
   - If the data transceiver does not respond, check cable connections, baud (configurable), and word format (must be 8-bit, no parity).
   - If not successful, the unit has a problem with the serial port.
3. Determine if the data transceiver detects the network:
   - Wait approximately six minutes to allow the device time to acknowledge the system and then issue the Get Status command (see *Communication Linking Protocol Reference Manual* for more information).
   - The data transceiver responds with a block of status information. The fourth byte of the status information is the out-of-range indicator. If this location contains an ASCII 1, the unit is not detecting the system and is out of range. This implies a problem with the receiver.
4. If the data transceiver detects the network, determine if the network detects the data transceiver:
   - The 17th byte of the status information is the registration information. If this byte contains an ASCII 0, the unit is not registered. This indicates a problem with the address programmed in the unit, the transmitter, or the configuration of the unit information in the network database.
5. If the data transceiver and the network acknowledge each other it should be possible to transmit and receive messages:
   - Issue the Transmit Message CLP command, (see *Communication Linking Protocol Reference Manual* for more information), with the addressing information configured to send the message to the CreataLink2 XT data transceiver initiating the message.
   - Repeatedly issue the Get Status command, (see *Communication Linking Protocol Reference Manual* for more information), until byte 2 of the status information returned by the data transceiver indicates success (bit3-bit1 = 100), or failure (bit3-bit1 = 010).

- If the message was successfully sent, the data transceiver should receive the message. Bytes 13 and 14 of the status information returned by the data transceiver is the number of non-downloaded messages. This number increments as messages are received by the unit.
- Repeat this test several times to ensure messages are being sent and received correctly. If the unit is successfully sending the messages, but the messages are not received until the unit transmits another message or resets, then there is a battery-save configuration problem.
- To retrieve the messages, issue the Download Delete CLP command (see *Communication Linking Protocol Reference Manual* for more information).

Smart Synch™

Parts Information

Contents

Accessories and Options **6-1**
Connectors 6-2

Accessories and Options

Refer to the description and option number to obtain accessories information (see Table 6-1). To order, please visit our website at www.smartsynch.com.

Table 6-1. Accessories and Options

Description	Accessory Kit Number
External antenna	PTAF1001A
Interface Board Assembly Kit	MKLN4400A

The CreataLink2 XT model numbers and configuration are shown in Table 6-2.

Table 6-2. Model Numbers

Model Number	Kit Number	Description
J12GWS0552AE	NUF3902	ReFLEX 50 CreataLink2 XT
J11GWS0552AE	NUF8006	ReFLEX 25 CreataLink2 XT

Connectors

Part numbers and specifications for mating connectors are listed in Table 6-3 and Table 6-4.

Table 6-3. 8 and 22-Pin Part Numbers and Specifications

Part Number	Electrical Specifications
Molex P/N 87332-0806	Max rated @ 2A per contact
Molex P/N 87332-6022	Max rated @ 2A per contact

Table 6-4. 8 and 22-Pin Mating Connector Part Numbers

Part Number	Electrical Specifications
Molex P/N 51110-0860 (Polarized 8-pin receptacle)	Max rated @ 2A with 26 AWG wire
Molex P/N 51110-2251 (Polarized 22-pin receptacle)	

Smart Synch™

Abbreviations and Acronyms

APPENDIX A

Abbreviations and Acronyms

A	Ampere(s)
ac	Alternating Current
ACK	Acknowledgment
ANSI	American National Standards Institute
API	Application Programmer Interface
ARM	Advanced RISC Machine
BMO	Basic Message Output
BMT	Basic Message Transmit
bps	Bits per second
C	Celsius
CLP	Communication Linking Protocol
CMOS	Complementary Metal-Oxide Semiconductor
CPU	Central Processing Unit
dB	Decibel
dBc	Decibels relative to carrier
dBd	Decibels relative to dipole
dBi	Decibels relative to isontropic antenna
dBm	Decibels mean; levels relative to 1 mW
dc	Direct Current
DCE	Data Communications Equipment
Desense	Loss of sensitivity due to high ambient noise
DTE	Data Terminal Equipment
DVM	Digital Volt Meter
EEPROM	Electrically Erasable, Programmable Read-Only Memory
EIRP	Effective radiated power relative to isotropic
EMI	Electromagnetic Interference
ERP	Effective Radiated Power
ESD	Electrostatic Discharge
ESN	Electronic Serial Number
FCC	Federal Communications Commission (US)
FSK	Frequency Shift Keying
FWA	Fixed Wireless Application
GHz	Gigahertz
GND	Ground
GPS	Global Positioning System
Host	The computer platform
HP	Hewlett-Packard
Hz	Hertz
JTAG	Joint Test Action Group
IC	Integrated Circuit
ID	Identification
I/O	Input/Output
ICN	Inventory Control Number
kbyte	Kilobyte
kHz	Kilohertz
kV	Kilovolt
LAN	Local Area Network
LCD	Liquid Crystal Display
Li-ion	Lithium Ion (battery technology)
LQ	Location Query
mA	milliampere(s)
MHz	Megahertz

Abbreviations and Acronyms

NAK	Negative Acknowledgment
NBPCS	Narrow Band Personal Communications System
NiCad / NiCd	Nickel-Cadmium (battery technology)
NiMH	Nickel-Metal-Hydride (battery technology)
NRZ	Non-Return-to-Zero
OEM	Original Equipment Manufacturer
PCB	Printed Circuit Board
PIN	Personal Identification Number
PPS	Pager Programming Software
PC	Personal Computer
RAM	Random Access Memory
RF	Radio Frequency
RFI	Radio Frequency Interference
RGxxx	Cabling designation number
RS-232	The EIA standard for a serial data interface
Rx	Receive
SMA	Sub-miniature connector
TTL	Transistor-transistor logic
Tx	Transmit
UAR	Universal Asynchronous Receiver
UART	Universal Asynchronous Receiver/Transmitter
Vdc	Volts, direct current
VSWR	Voltage Standing-Wave Ratio
WAN	Wide Area Network

Desense Overview

APPENDIX B

Desense Overview

The CreataLink2 XT device is a board-level product. This discussion of desense is included to ensure that integrators are aware of its effects.

This section details the following aspects of desense:

- Desense Defined
- Noise Sources
- Receiver Susceptibilities
- Measurement Techniques
- Preparing the Device under Test
- Performance Goals
- Radio Performance Capabilities
- FCC Part 15 Level Comparison
- Determining Emission Level Goals
- Prediction of Sources
- Desense Scenarios
- Methods of Controlling Emissions
- Shielding Approach
- Alternate EMI Reduction Methods
- Antenna
    - Field Strengths from the Antenna
    - Antenna Interactions
- Summary

Desense Defined

Receiver desensitization occurs when an unwanted signal is present in the receiver at a frequency that causes interference (see Figure B-1). The sources can be difficult to locate and difficult to correct. This noise desensitizes or lowers the sensitivity threshold of the receiver.

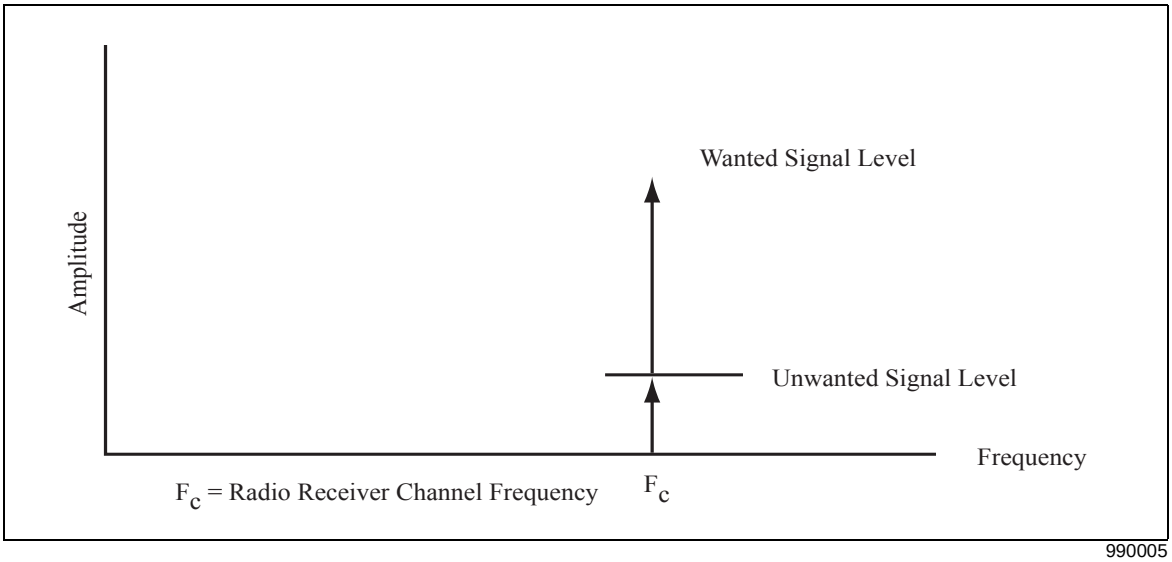

Figure B-1. Wanted and Unwanted Signal Levels

The radio cannot differentiate between wanted and unwanted signals. In frequency-modulated systems, the radio captures the strongest signal that the receiver detects. If both a wanted and an unwanted signal are present, and there is no significant difference in level, the unwanted signal can overtake the receiver, and block the wanted signal.

Reliable reception occurs when you maintain a safety margin via co-channel rejection. A typical co-channel rejection is 10 dB. That is, an interference signal greater than 10 dB below the wanted signal would have little impact on the data receiver data recovery.

Calculate the level of interference that creates desensitization as follows:

Desense Threshold = Radio receiver sensitivity [dBm] - Co-channel rejection [dB] + Antenna Factor [dB]

The antenna factor is the ability of the antenna to convert free space electromagnetic wave energy to power at the characteristic input impedance of the receiver.

Any interference above this level can create desense, which reduces the radio sensitivity for reception. Every 1 dB above the threshold level creates 1 dB of desense.

A worst case scenario is a noise source at the same frequency as the channel center frequency. This noise source is for any signal that falls within the channel bandwidth of the radio receiver. Desense also occurs at IF down-conversion frequencies.

For the CreataLink2 data transceiver, the receiver bandwidth is 10 kHz; the first IF is at 45.1 MHz, and the second IF is at 455 kHz. Oscillator frequencies are 16.8 MHz, 45.555 MHz, and at the channel frequency minus 45.1 MHz.

Noise Sources

CPU clocks, address and data buses, user displays, switching power supplies, and peripheral drivers are sources of EMI. The frequency of these emissions is unstable because high stability clock sources are not required in host computer designs. The frequency of sources drifts as a function of temperature, time, and aging. The edges of clock signals create detectable harmonics in the 1-GHz band and move in the frequency spectrum as a function of time. To measure the effects of these emissions, determine where the emissions exist in the frequency spectrum.

Noise from the host is conducted through the electrical/mechanical interface or radiates electromagnetic fields received by the data transceiver antenna. Smart-Synch, Inc. data transceivers are designed to minimize conducted noise.

Radiated electromagnetic fields from internal circuitry are incident on the data transceiver antenna. These fields are converted to noise power via the antenna and are incident on the receiver. Physical interface signaling has less impact on receiver performance and can be electrically decoupled via passive components.

Receiver Susceptibilities

The receiver is susceptible to desense within the channel bandwidth and at intermediate frequencies used for down-conversion. Excessive noise on power supply pins can also create sensitivity problems.

Desense Measurement Techniques

To measure desense indirectly, record the emission level from the host and then calculate the effect on the data transceiver. To measure desense directly, use packet error rate testing off the air. The direct method is similar to a system test. The test should be non-intrusive, with no peripheral test cables connected to the unit under test. Cables have a significant effect on receiver sensitivity results.

Indirect testing is FCC Part 15 EMI testing. Some assumptions are made to extrapolate the results and convert them to desense figures. The best way to measure desense is to use a spectrum analyzer to measure the signal the receive port detects (see Figure B-2).

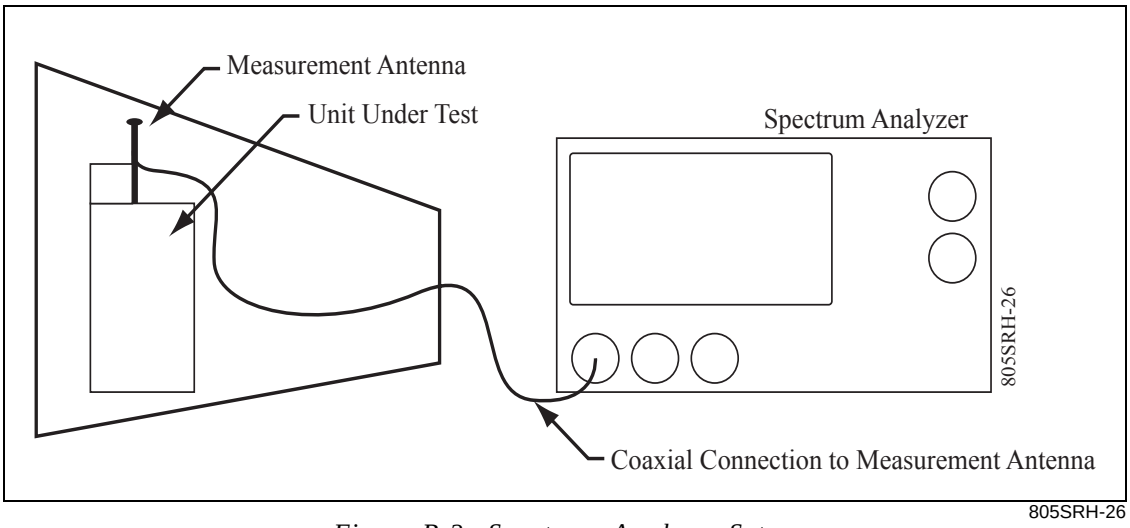

Figure B-2. Spectrum Analyzer Setup

Connect the product antenna to a spectrum analyzer that has an input impedance of 50 ohms. If the antenna is not available, use a portable dipole antenna as a measurement antenna.

This measurement method determines the amount of RF energy that the host device emits. The measurement does not account for any noise that is transmitted through a conductive pathway.

With the input impedance of the analyzer and the antenna the same as the radio receiver, the analyzer measures the actual receiver noise. Use the following calculation to determine the level at which desense occurs:

Desense Threshold = Radio Receiver sensitivity [dBm] - Co-channel rejection [dB] + Antenna Factor [dB]

Depending on its frequency, any noise source above this level can create desense.

The indirect method is less effective than the direct method because it does not account for the characteristics of the data protocol. The bandwidth of the noise source is important. If the source is narrowband, it may cause more problems than a wideband source. There are only a limited number of channels available. Therefore, a noise source that desenses a single channel can cause the data transceiver to fail.

Even if a narrowband noise source is separated in frequency from a receive channel, it might move around due to temperature, load conditions, power supply variations, and other factors. The indirect method is not an effective way to determine desensitization at IF frequencies or from mixed product sources.

The measurement equipment should measure signals as low as –120 dBm. Use a preamplifier to enable the spectrum analyzer to achieve these levels. Use the smallest resolution bandwidth that the analyzer supports, typically 1 kHz, to improve the dynamic range of the measurement.

Preparing the Device Under Test

If the host device contains multiple sections that power up and down independently, make provisions to control the power to different sections during testing. This serves to isolate each section and enables you to locate the source of any emissions.

The host device must remain powered during the entire test cycle. Typical circuit blocks to power-on and exercise include:

- User displays
- Interface drivers and power supplies
- Peripheral silicon
- Mass storage devices and controllers

Performance Goals

Network coverage is the goal of emissions control. Allowable emissions levels are a function of radio sensitivity and the required network coverage.

Radio Performance Capabilities

Every radio technology demands certain sensitivity requirements. Wide area networks (WANs) require the subscriber device to be very sensitive, whereas local area networks (LANs) operate with higher receiver signal levels.

Highly sensitive radios are more susceptible to noise from the host platform. For example, assuming a 10 dB co-channel rejection, a less sensitive receiver tolerates a higher level of noise.

FCC Part 15 Level Comparison

The FCC emissions limits for unintentional radiators are as follows:

- 200 µV/M between 216 MHz and 960 MHz
- 500 µV/M above 960 MHz

These limits are for measurements conducted three meters away from the device.

Compare these numbers with the receiver sensitivity. Note that even if a host is Part 15 certified, there is still the possibility that the data transceiver will not work. This could happen when the host has a 180 µV/M spur at a receive channel. This would meet the FCC limit but would be 10 dB above sensitivity. If the desired channel is at sensitivity, this would cause the data transceiver to miss pages. As a general rule, if you provide 40 dB of margin to the FCC rules, there should be no desense problems.

Determining Emission Level Goals

To determine the allowable emissions levels from the host device, consider the following:

- The sensitivity of the data transceiver
- The targeted network coverage requirements
- The expected proximity of the data transceiver to the host platform noise sources

Achieving zero desense is not a realistic goal with a cost-sensitive commercial product. The following set of subjective levels is based on industry experience:

- Channels desensitized by less than 5 dB are acceptable.
- Channels desensitized by more than 10 dB create a noticeable problem within the network.
- Channels desensitized by more than 20 dB are unacceptable.

Each case is different. Each air protocol reacts uniquely, and each network performs differently under the same levels of unwanted ambient noise. Noise from the host higher than the desense threshold level degrades performance.

Because of the restricted number of channels used for paging, narrowband interference can cause more problems if the interference falls on a channel used by your carrier.

Prediction of Sources

Typically, there are two sources of noise in a circuit, narrowband and wideband. Narrowband interference is usually caused by a mixing product among several sources.

If the system runs a 16.8 MHz-clock, and a 1.23 MHz-clock and a strong narrowband emission is found at 865.2000 MHz, the emission comes from the 16.8 MHz-clock as a product of:

865.2/16.8 = 51.5, the 51st harmonic plus a subharmonic of 8.4 MHz

The wideband emissions usually come from a switching power supply created by the low frequency of the switcher modulating on a higher harmonic of another source. Switching power supplies creates magnetic energy from inductive coils. Any circuit that uses non-toroidal inductors is a source of noise.

Some emissions result from multiple order mixing of any number of sources. One way to find the emissions is to shut down sources one by one, and see if the emission disappears. Near-field probing provides a geographical fix on the emission when the source circuitry is found. Noise floor problems, which desense the entire receive band, prevent tracking individual sources by any method.

Use a loop probe to confirm emission sources. This probe must be small enough to pinpoint the area from which the emission radiates, yet large enough to provide adequate sensitivity.

Desense Scenarios

The target of 40 dB below FCC Class B guarantees no desensitization. Some typical scenarios that work in favor of the system are as follows:

- The host unit is in a power management state, completely asleep or in a reduced functional state. This state reduces EMI and enables improved wireless communications.
- The system functions even with interference reducing coverage range. This interference is not a problem if the data transceiver is not in a fringe area.
- Two-way protocols can retry unsent messages.

Each platform, network operating model, and user profile is different with each application, and requires a unique level of EMI reduction effort.

Methods of Controlling Emissions

The preferred means of control is to contain emissions to a level 40 dB less than the FCC Part 15 requirements. For WAN products, shielding achieves this control.

Standard techniques to achieve FCC certification are insufficient for wireless communications. Decoupling, partial shielding, and PCB layout methods produce only incremental improvements. Hybrid methods of shielding and source reduction are more effective approaches.

Source reduction efforts can increase the product direct materials cost unless the host platform is close to the emission goals. Standard EMI techniques are valuable when the target levels are not the goal.

Shielding Approach

The mechanical design of the host product must allow for EMC engineers to create a Faraday Box shield design. This box is an electrically continuous shielded enclosure that easily attenuates radiated signals from the host device. See *Electromagnetic Compatibility: Principles and Applications* by David A. Weston for information on shielded enclosure design. The shield minimizes the possible redesign required of the host PCB platform and circuitry.

Components of the Shield Design

Effective shield design incorporates:

- A highly conductive shielded enclosure that encapsulates all of the active circuitry, and is constructed of sheet metal or plated/sprayed plastic
- Decoupling on all signals exiting the enclosure
- Control of aperture sizes in the shield to less than $\lambda/10$ of the frequency of interest. This size applies to keyboard and display apertures in the enclosure. Aperture radiation testing at the frequencies of interest might prove that larger apertures are acceptable to the particular scenario.

Benefits of the Shielding Approach

Emissions reduction uses shielding source reduction techniques, such as decoupling, PCB layout and grounding, or a combination of the two. With a shield in place, any changes to product circuitry have no effect on emissions levels. If a circuit-level approach controls the emissions, a change in the circuitry can change emissions performance.

Alternate EMI Reduction Methods

Methods other than shielding to reduce emission levels are as follows:

- PCB layout modification using ground layers adjacent to high speed layers
- Capacitive or filter decoupling
- Redistribution of module interconnects

Antenna

The CreataLink2 XT transceiver is configured for use with an external antenna kit. You can purchase the antenna from SmartSynch, Inc., or it can be supplied by the customer.

Field Strengths from the Antenna

Field strengths from the wireless data transceiver transmitter can reach as high as 100 V/m 2 in. away. Field strength levels vary as a function of $1/R^2$; doubling the distance, R, decreases the strength level by a factor of 4. The host device must be capable of withstanding these levels. LCD displays and switching power supplies are susceptible to RF. Reference voltage points on power supplies, reset lines on processors, and keyboard scanning circuitry require decoupling.

Antenna Interactions

The following two interactions affect antenna performance:

- Placing a hand near the antenna can detune the antenna and absorb energy. Position the antenna so as to minimize interaction.
- The host device can interact with the antenna, especially WAN data transceivers that have high output power. Cabling for other peripherals must not interfere with this region. Provide a clear space around the antenna of 12 to 18 inches. This clear space should be free of cabling and metallic objects other than a ground plane. For fixed units, consider the antenna mounting location when you determine antenna position.

Summary

Consider these two basic interactions when you use a wireless device and computer as a system:

- The impact of the computer EMI on the system performance
- The impact the of the RF fields from the wireless device transmitter on the operation of the computer

The impact the RF fields from the wireless device transmitter is not a significant problem. It can be corrected with minimal effort and cost.

Because of the need for system coverage, the host EMI interaction with the radio receiver is difficult to identify and correct. Computer speed includes high frequency radiators that interfere with the radio reception of the wireless data transceiver.

This manual identifies the theoretical noise levels that affect the receiver. The goals are derived from system coverage requirements and the sensitivity of the radio. They are not arbitrarily decided to improve product performance, but to maintain the performance of the RF networks and the radios. The target level and methods to achieve these goals are the choice of the product integrator. The preferred methods mentioned are the result of experiments and past product experiences. Each product is unique; measure the product in an early engineering phase.

FLEX Application Protocol Licensing

APPENDIX C

FLEX Application Protocol Licensing

This chapter presents an overview of the FLEXsuite Protocols, associated licensing guidelines, and a licensee form. Actual terms and conditions of licensing agreements may vary.

Technology Overview

The FLEXsuite™ of Enabling Protocols included in this release are:

- The Route to Alternate Host protocol is used to route messages to predetermined wireline or wireless alternate host application destinations.
- The Uniform Addressing and Routing protocol is used to deliver application data of any format wireline or wireless devices by specifying an explicit or tokenized TO address, FROM address, and/or data content type.
- The Generic Over-the-Air Programming protocol is used to change wireless device parameters over the air. This protocol does not depend on wireless device make, model or version.
- The Token Text Compression protocol is used to send compressed text messages over the air to wireless devices.
- The FLEXinfo™ Information Service protocol is used to send information service messages on specific topics and uses data reduction techniques to update only the parts of the message that change.
- The Data Security Identifier protocol is used to identify the method and parameters used to secure other FLEXsuite™ messages (end-to-end or over-the-air).
- The Binary Message Transfer protocol is used to send reverse channel binary messages using common addressing schemes such as e-mail, two-way messaging PIN, or paging PIN.
- The Simple Packet Transport protocol is used to send very long reverse channel messages by breaking them down into smaller packets.
- The Multiple Choice Reply protocol is used to send reverse channel multiple choice replies using FLEX™ Family Message Sequence Number addressing.
- The Basic Message Reply protocol is used to send reverse channel text or binary replies to messages using FLEX™ Family Message Sequence Number addressing.
- The Basic Message Origination protocol is used to send text or binary messages using common addressing schemes such as e-mail, fax, telephone, two-way messaging **PIN**, or paging **PIN**.
- The Key Management Request data protocol is used to create and maintain encryption keys.
- The Application Data Security Identifier data protocol is used to identify the method and parameters used to secure application messages.
- The Wireless Email Messaging data protocol is used to carry wireless Email or messages, as well as information about those messages, between wireline or wireless providers and wireline or wireline recipients.
- The Canned Messaging Protocol is used to send short codes and data parameters in place of common words and phrases, and to send messages with embedded multiple choice responses.
- The Communication Linking Protocol is used to allow wireless applications to communicate with wireless devices over a serial communication interface.

Licensing

Motorola, Inc. intends to license the FLEXsuite™ of Enabling Protocols (hereinafter FLEXsuite technology) to entities that wish to use the protocols in their product(s). These licensed entities generally include, but are not limited to, information service data center providers, infrastructure manufacturers, and subscriber unit manufacturers, just to mention a few.

When licensed, your company's implementation of the FLEXsuite technology must conform to the FLEXsuite technology specification to assure that the protocol is implemented in a standard and consistent manner by all licensees and to assure that the FLEXsuite protocols are used only with the family of FLEX™ communication transport protocols. The FLEXsuite technology specification document will only be distributed to companies who have signed an appropriate Non-Disclosure Agreement with Motorola, Inc. or who have signed a FLEXsuite of Enabling Protocols Cross License Agreement. As Motorola, Inc. releases updates to the FLEXsuite technology, Motorola, Inc. will notify and distribute to your company and other licensees information pertaining to such updates.

When applicable, the FLEXsuite technology agreement provides for cross-licensing of certain intellectual property rights of both Motorola, Inc. and your company. The purpose of the cross-license is to provide your company a license to certain Motorola, Inc. intellectual properties necessary to practice the FLEXsuite technology. The agreement also requires that your company provide to Motorola, Inc. a license to certain of your company's intellectual property(ies) that might be necessary to practice the FLEXsuite technology. In order to maintain a world-wide standard of the FLEXsuite technology, this license also gives Motorola, Inc. the right to sublicense the relevant intellectual property(ies) of your company to present and future FLEXsuite licensees, thereby giving them freedom of action with regard to such intellectual property(ies). Note that the license provided by your company is limited to only those intellectual property(ies) necessary for the practice of the FLEXsuite technology--not other unrelated intellectual property rights of your company.

It should be noted that the foregoing overview is not intended to be incorporated, nor to represent all the terms and conditions in the FLEXsuite of Enabling Protocols Cross License Agreement. For this reason, we urge you to carefully read each of the sections of the agreement. Please do not hesitate to call us if you have questions regarding any section of the agreement.

The FLEXsuite Protocols Licensee Information Form and instructions for submitting it are provided on the following pages.

FLEXsuite™ Protocols Licensee Form

Company Name:

Address:

FAX: ( ) **Phone:** ( )

Your company has executed the following FLEXsuite licenses with Motorola, Inc. (please circle all that apply):

FLEX™ ReFLEX™ InFLEXion™ N/A

Type of business (please circle all that apply):

Manufacturer Design House Carrier Other (please explain)

Please describe your company's intended application that will implement the FLEXsuite protocols. For example, will your company provide content, manufacture infrastructure equipment, manufacture test equipment, develop data publishing software to license to others, or develop application software to license to others? Please describe the exact nature of your intended implementation.

Will your company perform all of the product development itself? **Yes** **No**

If not, what part of the development will be contracted to a third-party developer?

If development is done outside of your company, do you expect that your company will modify the product or change how it uses the FLEX™ Suite application protocols? If so, please explain.

If development is completed outside of your company, do you want the developer to be able to sell and distribute the product to third parties external to your company? **Yes** **No**

Who will be responsible for maintaining and updating the software used in your FLEX™ Suite application, your company or a third party? If a third party, please state company name and address.

Has your company (or your third party developer, if applicable) created other technology in the field of paging and messaging services? If yes, briefly describe. **Yes** **No**

This form continues on the next page.

The applicant agrees and understands that Motorola, Inc. may rely on the information contained above in processing the application and that any approval of the application and/or the effectiveness of any subsequent agreement between Motorola, Inc., and the applicant is expressly conditioned upon the completeness and truthfulness of the application and its contents. It is agreed and understood by the applicant that omission or misstatement of any material fact or circumstance shall serve as full grounds for the rejection of the application by Motorola, Inc. and/or immediate termination by Motorola, Inc. of any agreement between Motorola, Inc. and the applicant now or hereafter in effect.

Applicant further agrees to notify Motorola, Inc. promptly in writing of any change whatsoever in the facts set forth or circumstances described in the application. Failure to notify Motorola, Inc. of any material changes shall be and shall serve as full grounds for the rejection of the application and/or immediate termination by Motorola, Inc. and the applicant now or hereafter in effect.

Applicant, by affixing of the signature of its authorized representative does certify to the accuracy and completeness of all of the above.

UNDERSTOOD AND ACCEPTED:

Company:

Signature:

Print Name:

Title:

Date:

Please return this form directly to:

Licensing Manager
Motorola, Inc.
1500 Gateway Blvd.
MS99
Boynton Beach, Florida 33426

SMARTSYNCH INTEGRATOR'S KIT SOFTWARE MATERIALS LICENSE

IMPORTANT – READ CAREFULLY

READ CAREFULLY THE TERMS AND CONDITIONS OF THIS AGREEMENT BEFORE USING THE INTEGRATOR'S KIT. INSTALLATION OF INTEGRATOR'S KIT SOFTWARE AND DOCUMENTATION INDICATES YOUR ACCEPTANCE OF THESE TERMS AND CONDITIONS. IF YOU DO NOT AGREE WITH THE TERMS AND CONDITIONS OF THIS AGREEMENT, PROMPTLY RETURN THE INTEGRATOR'S KIT UNUSED TO THE PROVIDER.

THIS IS A LEGAL AGREEMENT BETWEEN YOU ("LICENSEE") and SMARTSYNCH, INC., a Delaware corporation having an office at 4400 Old Canton Road, Ste 300, Jackson, MS 39211 U.S.A., (hereinafter "SMARTSYNCH").

SMARTSYNCH has created an INTEGRATOR'S KIT for generating APPLICATION(s) that operate with a FLEX™ Kernel Operating System embedded within CreataLink™2 XT transceivers to transmit and receive messages according to specific message types that are compatible with the FLEXsuite™ set of protocols.

1) **Definitions.**

   a) INTEGRATOR'S KIT includes hardware and INTEGRATOR'S KIT SOFTWARE MATERIALS.

   b) INTEGRATOR'S KIT SOFTWARE MATERIALS includes: INTEGRATOR'S KIT SOFTWARE, all documentation included with the INTEGRATOR'S KIT SOFTWARE, and any floppy disk, CD, or other media on which the INTEGRATOR'S KIT SOFTWARE and the documentation reside.

   c) INTEGRATOR'S KIT SOFTWARE shall mean: (1) a Communications Linking Protocol (CLP™) interface library, and (2) CreataLink2 XT FLEX Kernel Application Programming Interfaces (APIs), setup files, and object libraries.

   d) APPLICATION shall mean original code, intended to reside outside a CreataLink2 XT transceiver, generated to perform a specific function utilizing the CLP interface library to communicate serially to a CreataLink2 XT transceiver; or original code, intended to be embedded within a CreataLink2 XT transceiver, generated to perform a specific function utilizing the FLEX Kernel APIs, setup files, or object libraries.

2) **Ownership.** Ownership of the INTEGRATOR'S KIT SOFTWARE MATERIALS shall remain with SMARTSYNCH.

3) **License.**

   a) *Rights granted under SMARTSYNCH's copyright and other intellectual property rights in the INTEGRATOR'S KIT SOFTWARE MATERIAL.*
   SMARTSYNCH grants to LICENSEE a nonexclusive, non-assignable, non-transferable, license, without the right to sublicense, to:

      i) use the INTEGRATOR'S KIT SOFTWARE MATERIALS to create APPLICATION(s) for use in CreataLink2 XT transceivers, except for uses in hazardous environments or uses requiring fail safe performance,

      ii) copy, including copy and modify, portions, pre-designated by SMARTSYNCH, of the INTEGRATOR'S KIT SOFTWARE and include the portions in the APPLICATION(s), and

      iii) distribute the APPLICATION(s) in object code form.

   b) *Restrictions.*

      i) LICENSEE is granted no rights to the INTEGRATOR'S KIT SOFTWARE MATERIALS except those rights itemized under section 3) *a)*.

      ii) LICENSEE agrees to include a copyright notice in the form "Portions of Software © Copyright 2002 SmartSynch, Inc. All rights reserved", on any physical media containing the portions of the INTEGRATOR'S KIT SOFTWARE authorized in clause 3) *a)* (ii), and in human-readable form, e.g., in ASCII format, at the beginning of the executable-code form of any API containing the authorized portions.

4) **Disclaimer and Limitation of Remedies. LICENSEE UNDERSTANDS AND AGREES AS FOLLOWS:**

   a) LICENSEE EXPRESSLY ACKNOWLEDGES AND AGREES THAT USE OF THE INTEGRATOR'S KIT SOFTWARE MATERIALS IS AT LICENSEE'S SOLE RISK. THE INTEGRATOR'S KIT SOFTWARE MATERIALS IS PROVIDED "**AS IS**" AND WITHOUT WARRANTY OF ANY KIND. SMARTSYNCH DISCLAIMS ALL WARRANTIES, EXPRESS OR IMPLIED, INCLUDING ANY WARRANTIES OF MERCHANTABILITY OR FITNESS FOR A PARTICULAR PURPOSE. IN NO EVENT WILL SMARTSYNCH'S LIABILITY OF ANY KIND INCLUDE ANY SPECIAL, INCIDENTAL, OR CONSEQUENTIAL DAMAGES, INCLUDING LOST PROFITS, EVEN IF SMARTSYNCH HAS KNOWLEDGE OF THE POTENTIAL LOSS OR DAMAGE.

   b) SMARTSYNCH will not be liable in contract, in tort or otherwise for damages or loss of property or equipment, loss of profits, or revenue, loss of use of equipment or power system, cost of capital, cost of purchased or replacement power or temporary equipment.

   c) SMARTSYNCH does not provide any indemnification of any kind (including patent indemnification) for the INTEGRATOR'S KIT SOFTWARE MATERIALS.

   d) Some states do not allow the exclusion of implied warranties so the above exclusion may not apply to LICENSEE. This warranty gives LICENSEE specific legal rights, and LICENSEE may also have other rights which vary from state to state.

5) **Termination.** This agreement is effective until terminated. LICENSEE may terminate it at any time by destroying the INTEGRATOR'S KIT SOFTWARE MATERIALS, including all computer programs and documentation, and erasing any copies residing on computer equipment. The license shall automatically terminate if LICENSEE attempts to transfer the INTEGRATOR'S KIT SOFTWARE MATERIALS, or any portion thereof. This agreement shall terminate if LICENSEE does not comply with any terms or conditions of this agreement. Upon such termination, LICENSEE agrees to destroy the INTEGRATOR'S KIT SOFTWARE MATERIALS and erase all copies residing on computer equipment.

6) **U.S. Government Restricted Rights**. The INTEGRATOR'S KIT SOFTWARE MATERIALS is provided to the Government only with restricted rights and limited rights. Use, duplication, or disclosure by the Government is subject to restrictions set forth in FAR Sections 52-227-14 and 52.221-19 or DFARS Section 52-227-7013(c)(1)(ii), as applicable. Manufacturer is Motorola, Inc., 1500 Gateway Boulevard, Boynton Beach, Florida 33426-8292.

7) **Export.** LICENSEE shall not export or re-export the INTEGRATOR'S KIT SOFTWARE MATERIALS to any country, person, entity, or end users subject to U.S. export restrictions. LICENSEE warrants that LICENSEE's export privileges have not been suspended, revoked, or denied by the U.S. Bureau of Export Administration or any other federal agency.