EN

NeoBeat

Newborn Heart Rate Meter

User Guide

NeoBeat 532-00033

NeoBeat Mini 531-00033

www.laerdalglobalhealth.com

Laerdal
helping save lives

Contents

Important Information	4
Intended Use	5
Overview	6
Setup	8
Charging	14
Use	16
Reprocessing	22
Connectivity	24
Service and Warranty	25
Troubleshooting	26
Specifications	29
Technical Description	32

Important Information

The information in this User Guide applies to both NeoBeat and NeoBeat Mini.

Prior to first use, read the User Guide completely to become familiar with the operation and maintenance of NeoBeat. Read all Cautions and Warnings before using NeoBeat.

⚠ Warnings and Cautions

A Warning states a condition, hazard, or unsafe practice that can result in serious personal injury or death.
A Caution states a condition, hazard, or unsafe practice that can result in minor personal injury or damage to the product.

Notes

A Note states important information about the product or its operation.

Rx Only (USA)

Caution: Federal law restricts this device to sale by or on the order of a licensed healthcare practitioner.

Intended medical indication:
NeoBeat and NeoBeat Mini are intended to measure the heart rate of a newborn within the first few hours after delivery.

NeoBeat is intended for use on newborns approximately 1.5 – 5 kg (3.3 – 11 lb) and NeoBeat Mini for newborns 0.8 – 2 kg (1.7 – 4.4 lb).

NeoBeat and NeoBeat Mini are intended to be in contact with the intact skin of the newborn's torso.

Intended users:
Healthcare professionals trained in newborn resuscitation.

Operating principle:
A battery powered monitor placed on the torso of a newborn to measure and present the heart rate. Dry electrodes on each arm of the device are placed on opposite sides of the patient's torso to pick up an ECG based signal. The signal is analyzed by a QRS detection algorithm, and heart rate is displayed.

Overview

NeoBeat *

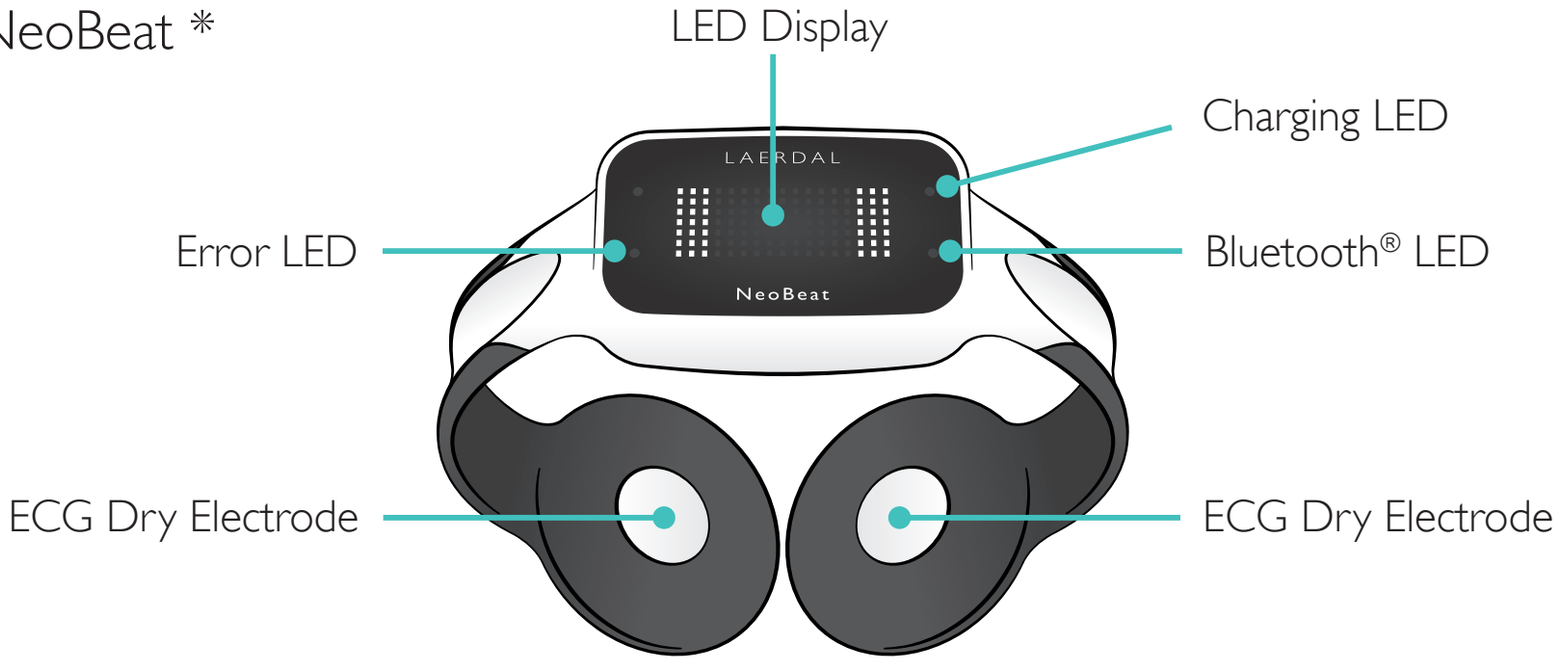

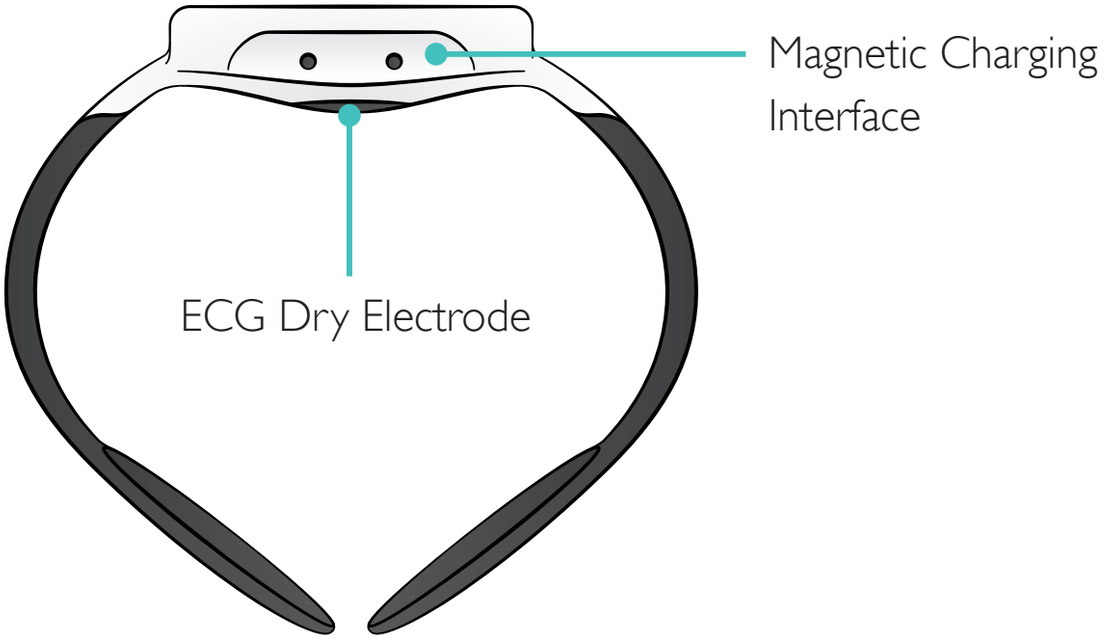

* Patient Applied Part

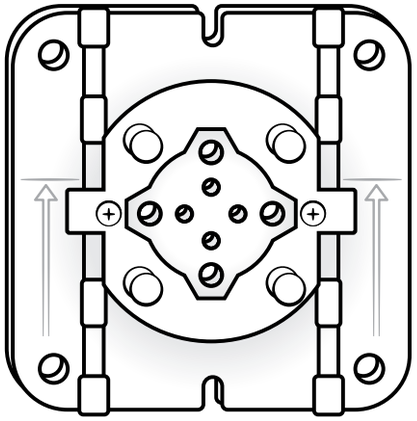

Mounting Bracket

Charging Stand

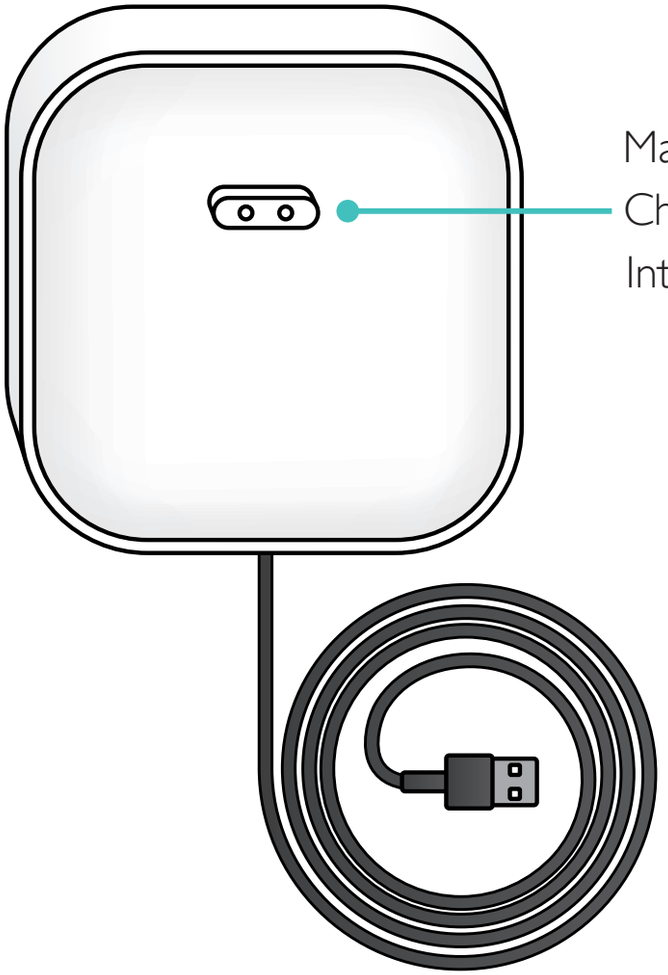

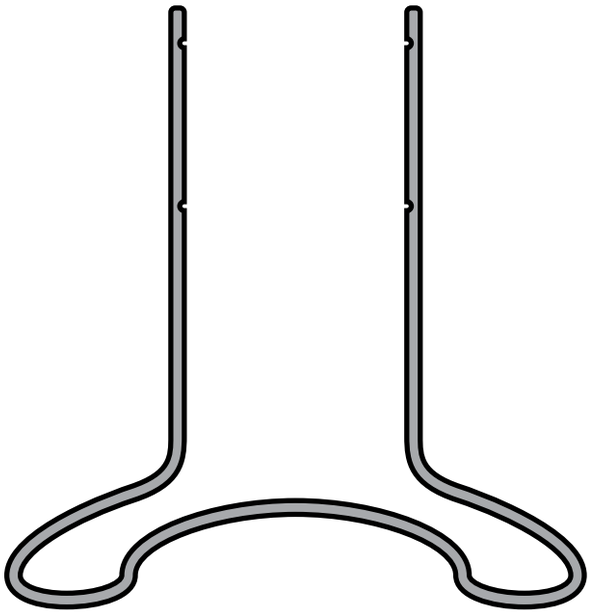

Newborn Bag-Mask Holder

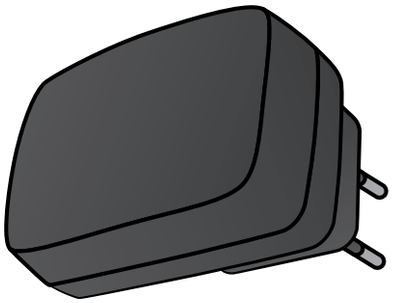

Power Adapter with
interchangeable plugs

Setup

NeoBeat Charging Stand can be mounted vertically to a wall, rail or post, or placed on a tabletop. When mounted vertically, the Newborn Bag-Mask Holder is optional. When used on a tabletop, the Newborn Bag-Mask Holder functions as a stand.

⚠ Caution

Do not mount the Charging Stand in close proximity to heat sources (e.g. directly below an infant warmer heat lamp).

Vertical Mount

- Multiple mounting screw hole patterns:
  9 x 9 mm, 21 x 21 mm, 75 x 75 mm.
- Use screws or double sided foam tape (not included) to mount the Mounting Bracket.

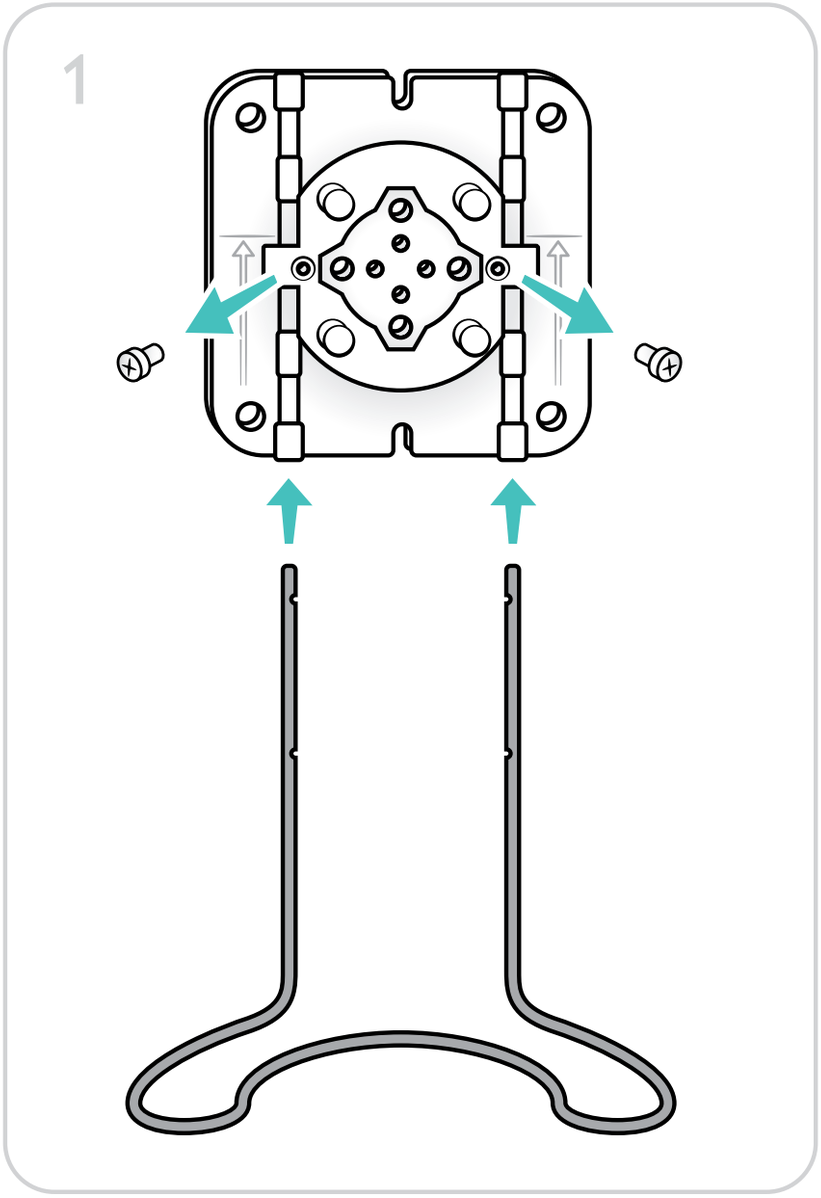

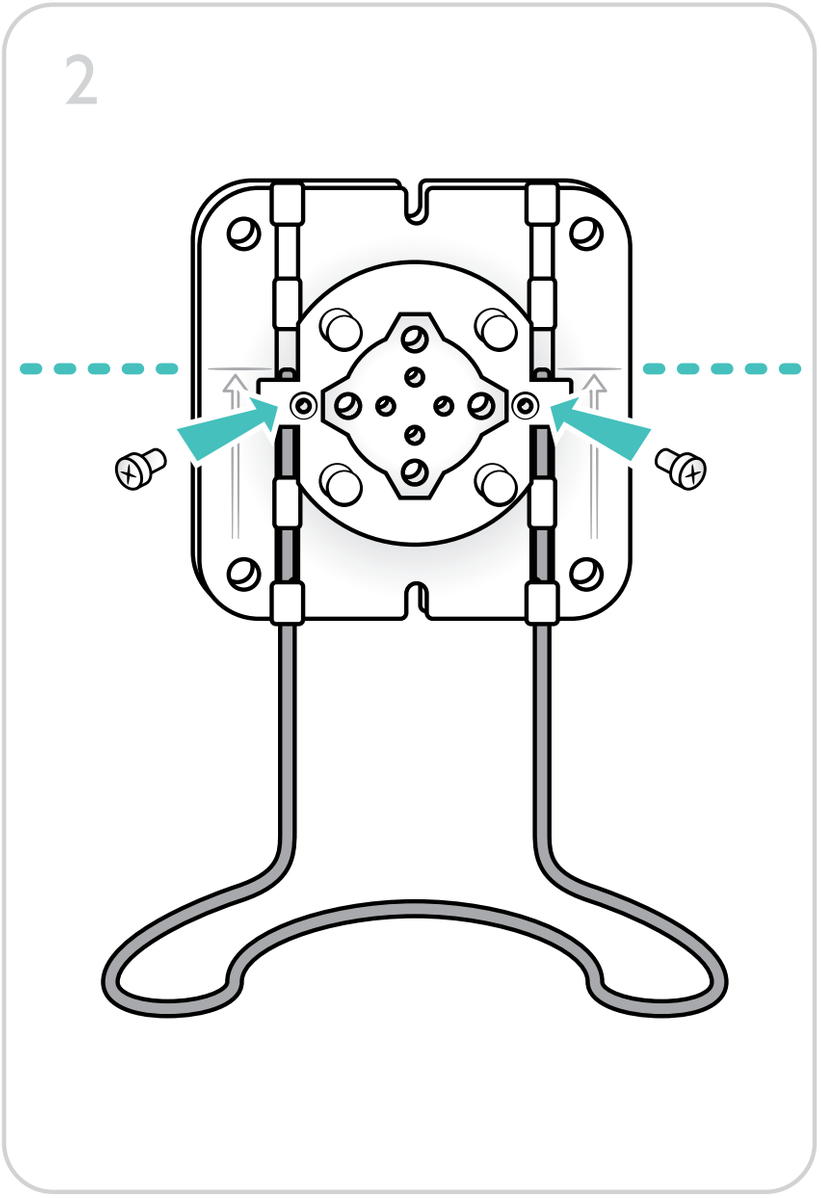

3

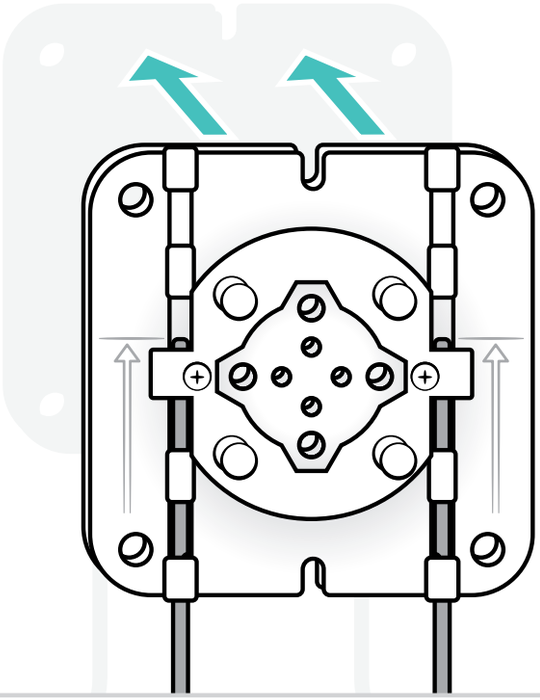

4

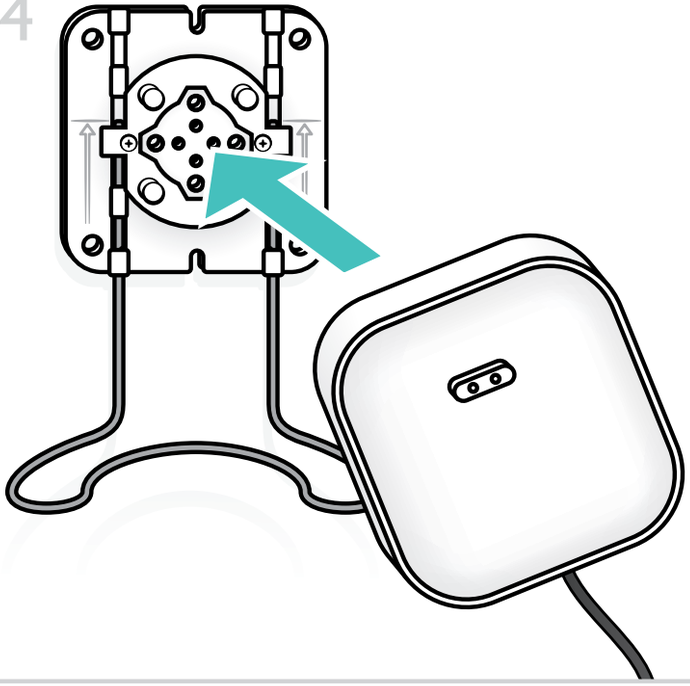

5

6

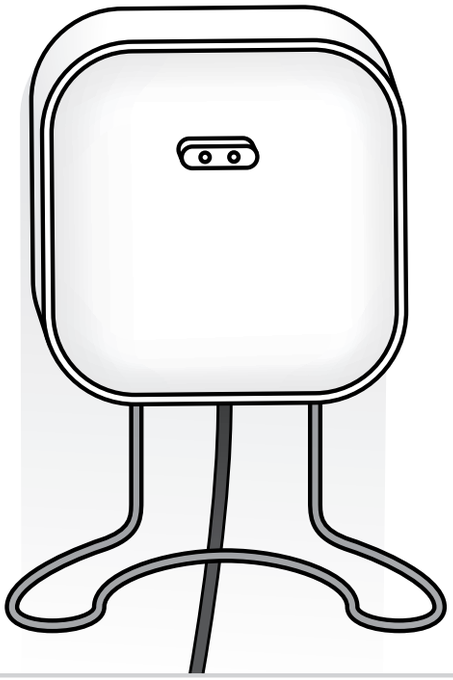

7

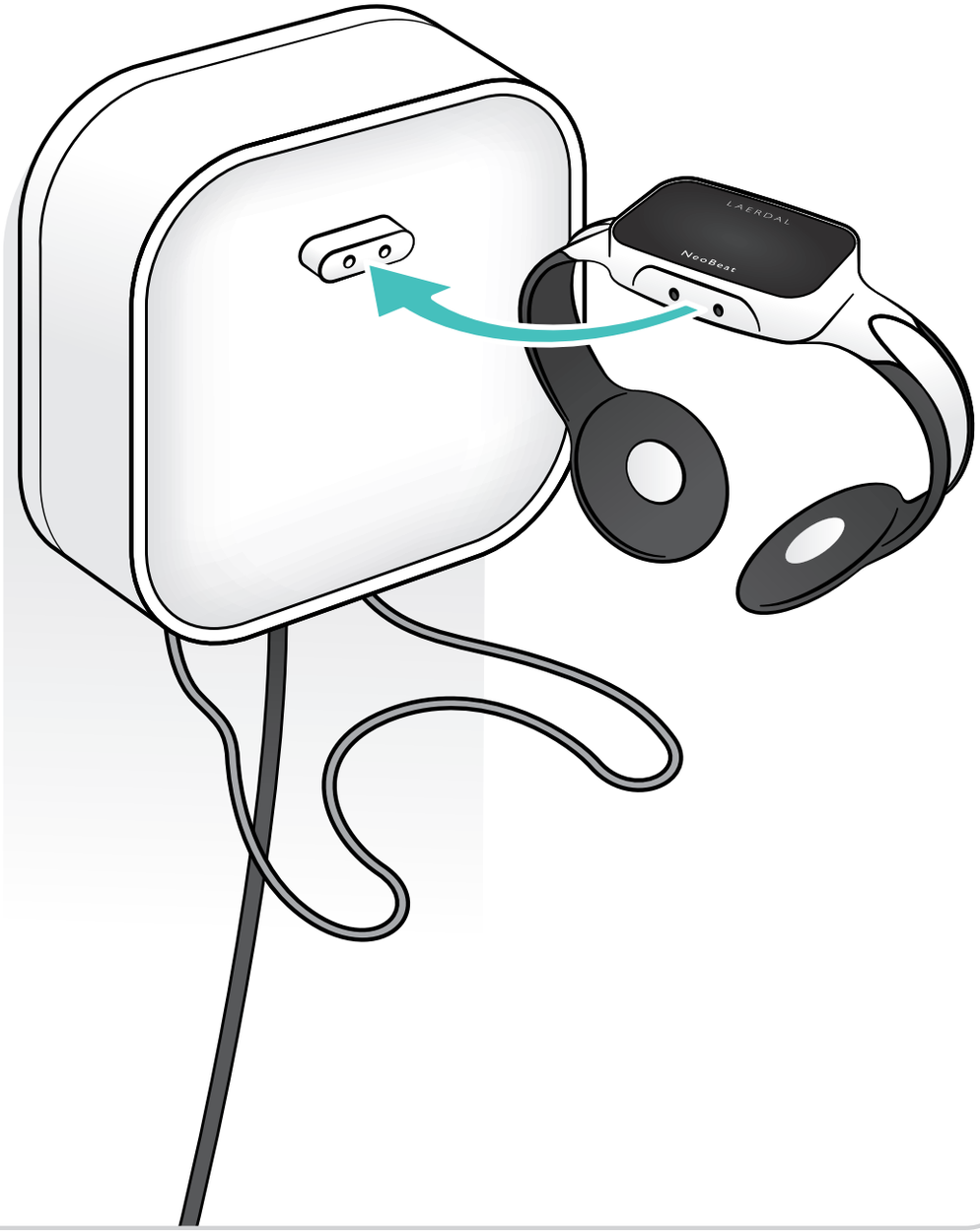

8

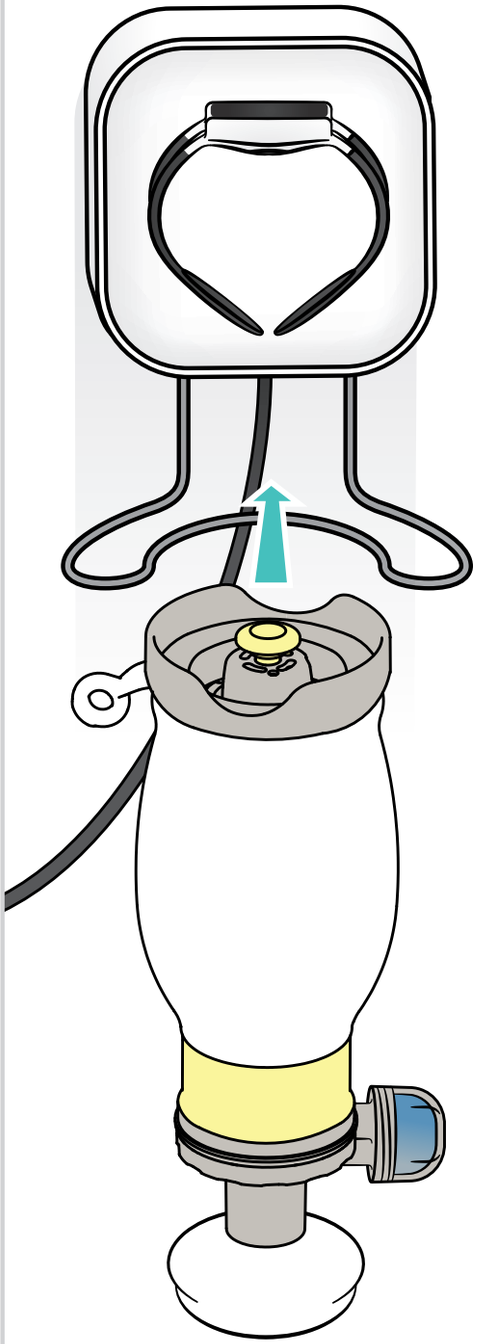

Tabletop Use

1

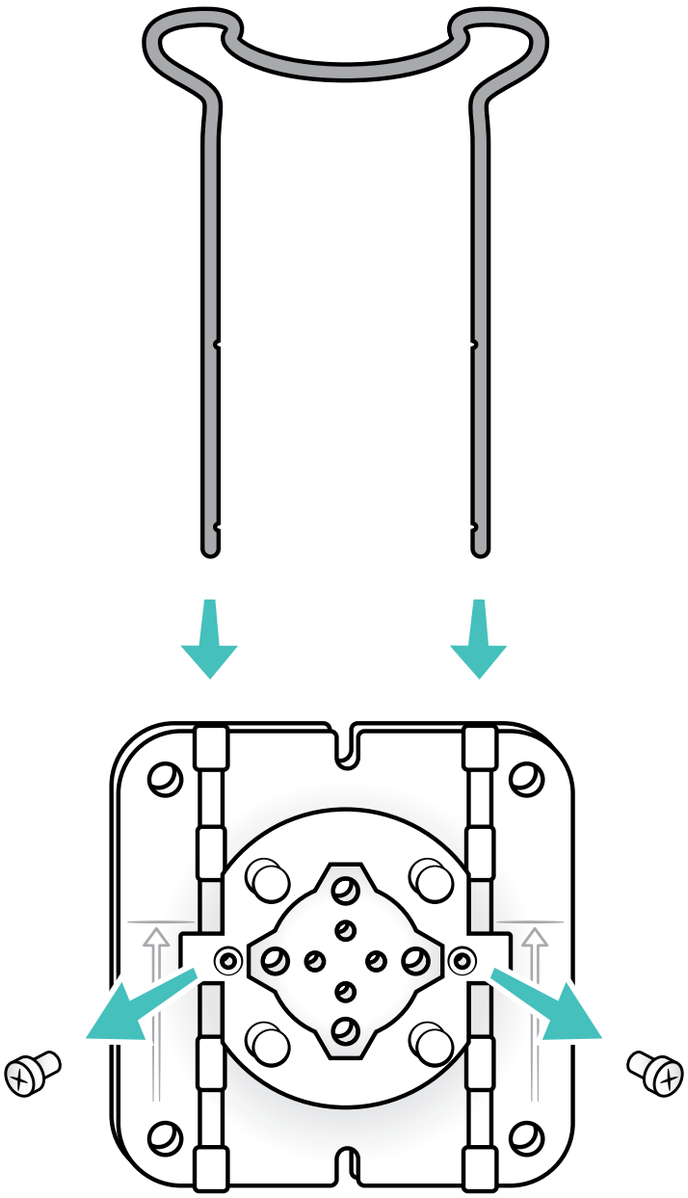

2

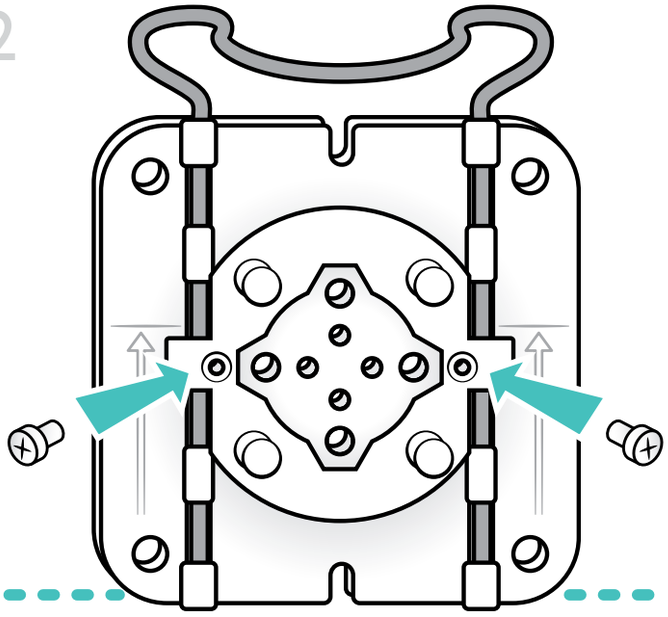

3

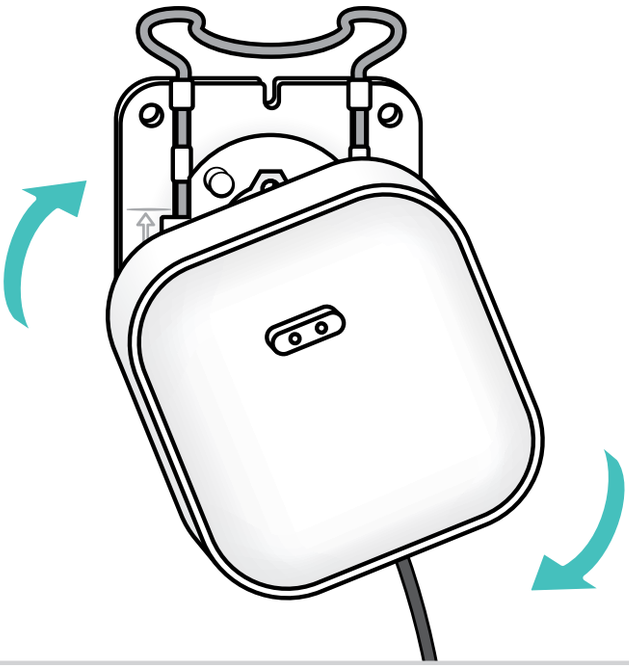

4

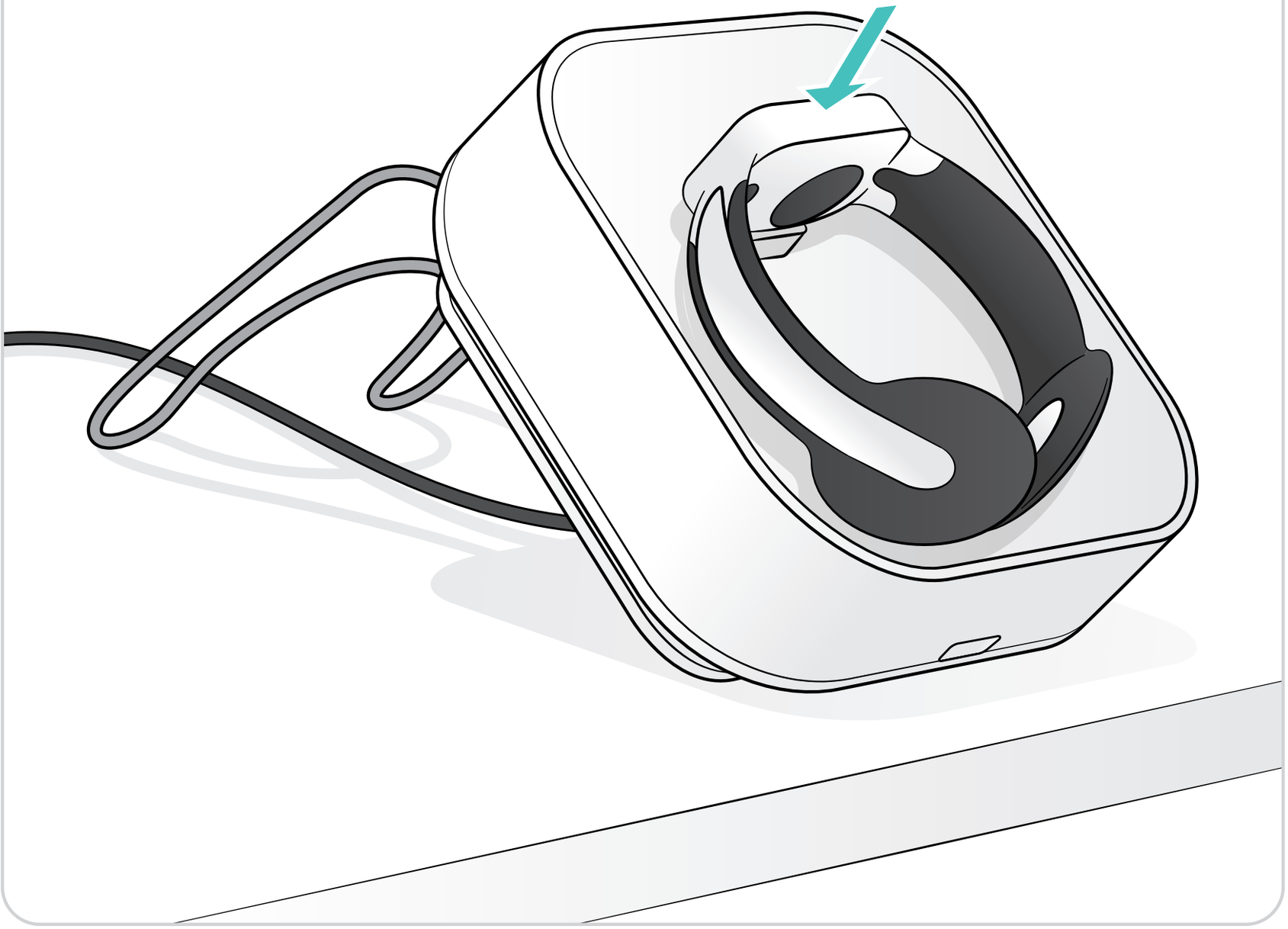

Charging

To initiate the device, NeoBeat must be charged for up to 3 hours before first use. Place it on the Charging Stand to charge the battery.

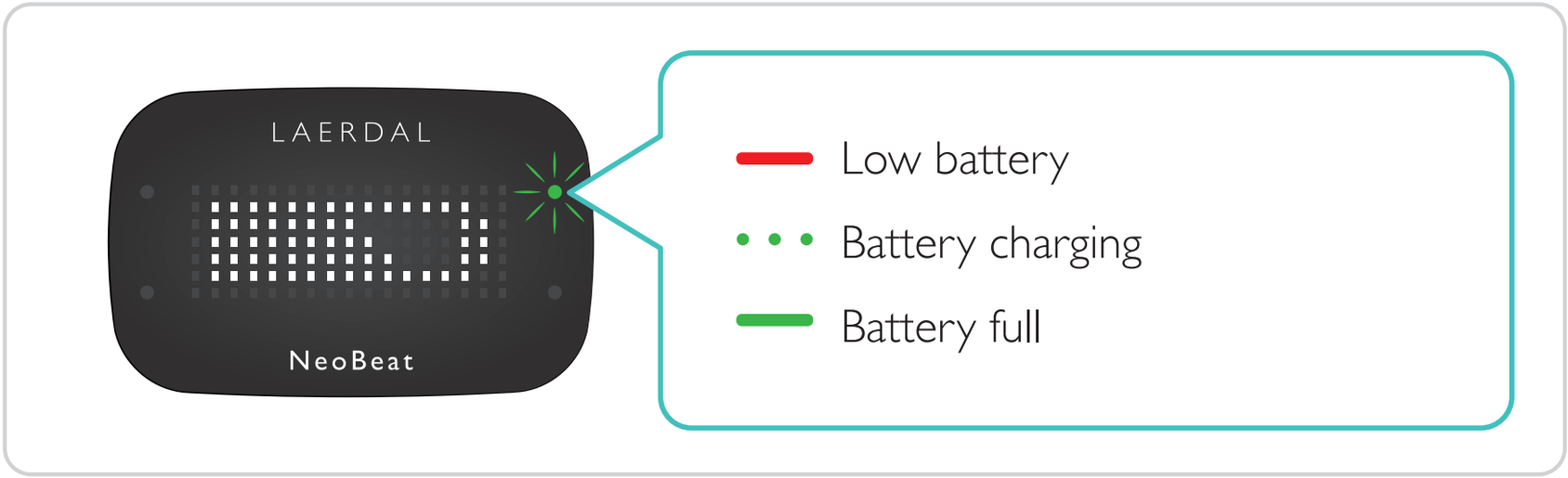

Maintenance Charging

Recharge NeoBeat monthly if not stored on the Charging Stand.

Notes

- *NeoBeat is activated by motion, which in turn uses battery life. When not in use, store it on the Charging Stand to avoid unnecessary battery use.*
- *The USB port on the Charging Stand can be used to connect one (and only one) additional Charging Stand.*

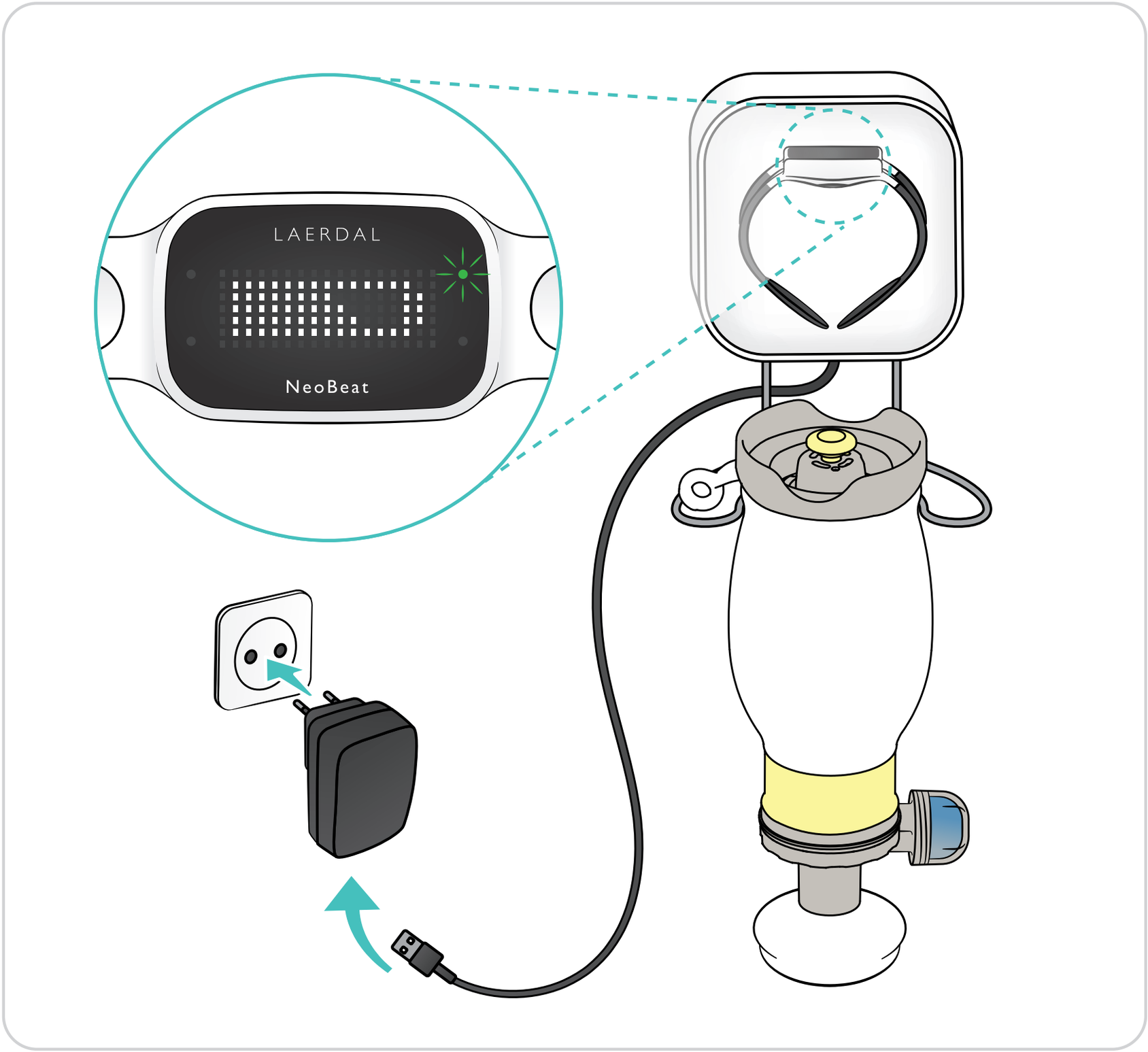
LAERDAL
NeoBeat

Remove NeoBeat from the Charging Stand. NeoBeat automatically turns on when it detects motion.

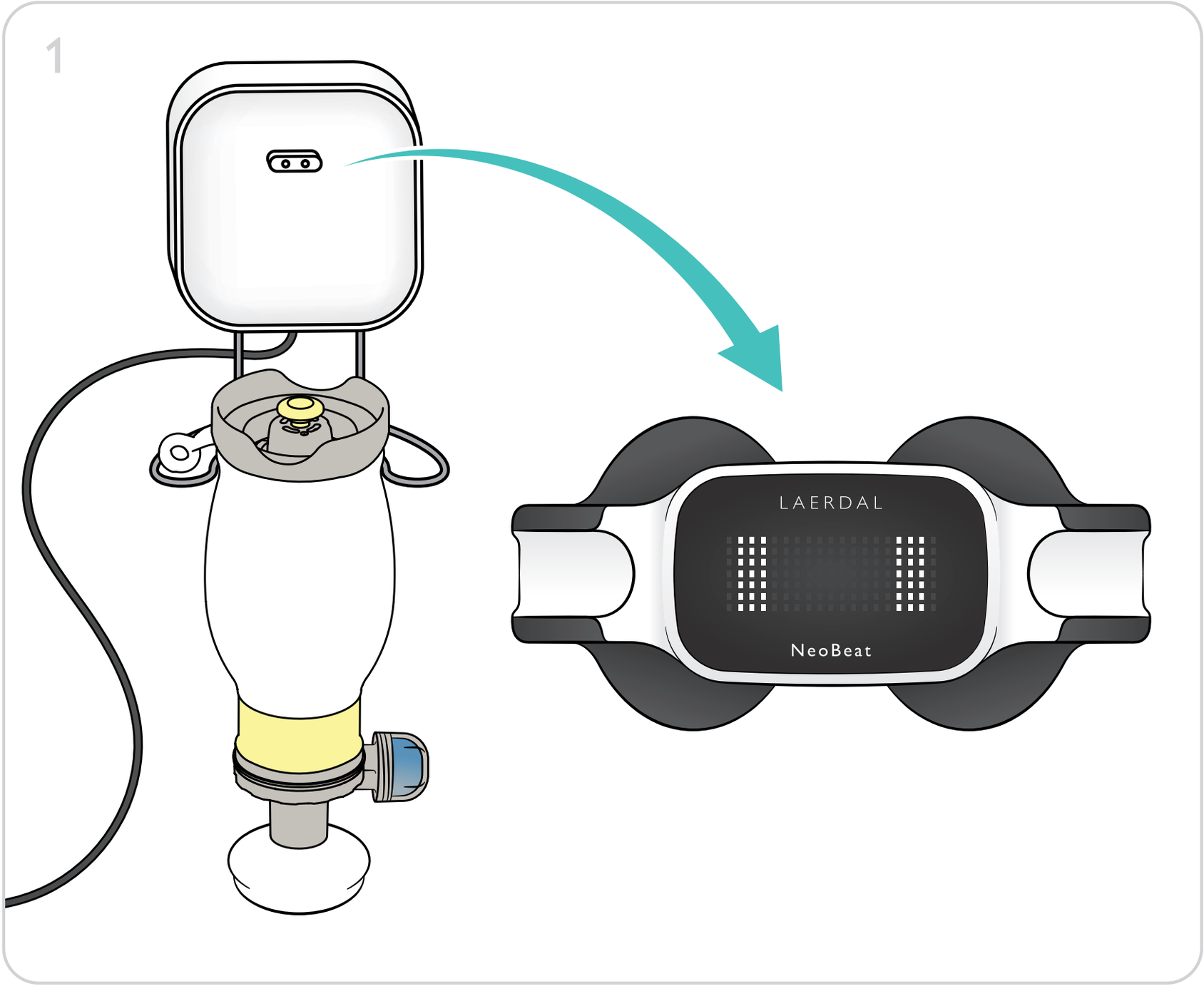

Place NeoBeat around the newborn's torso.

2

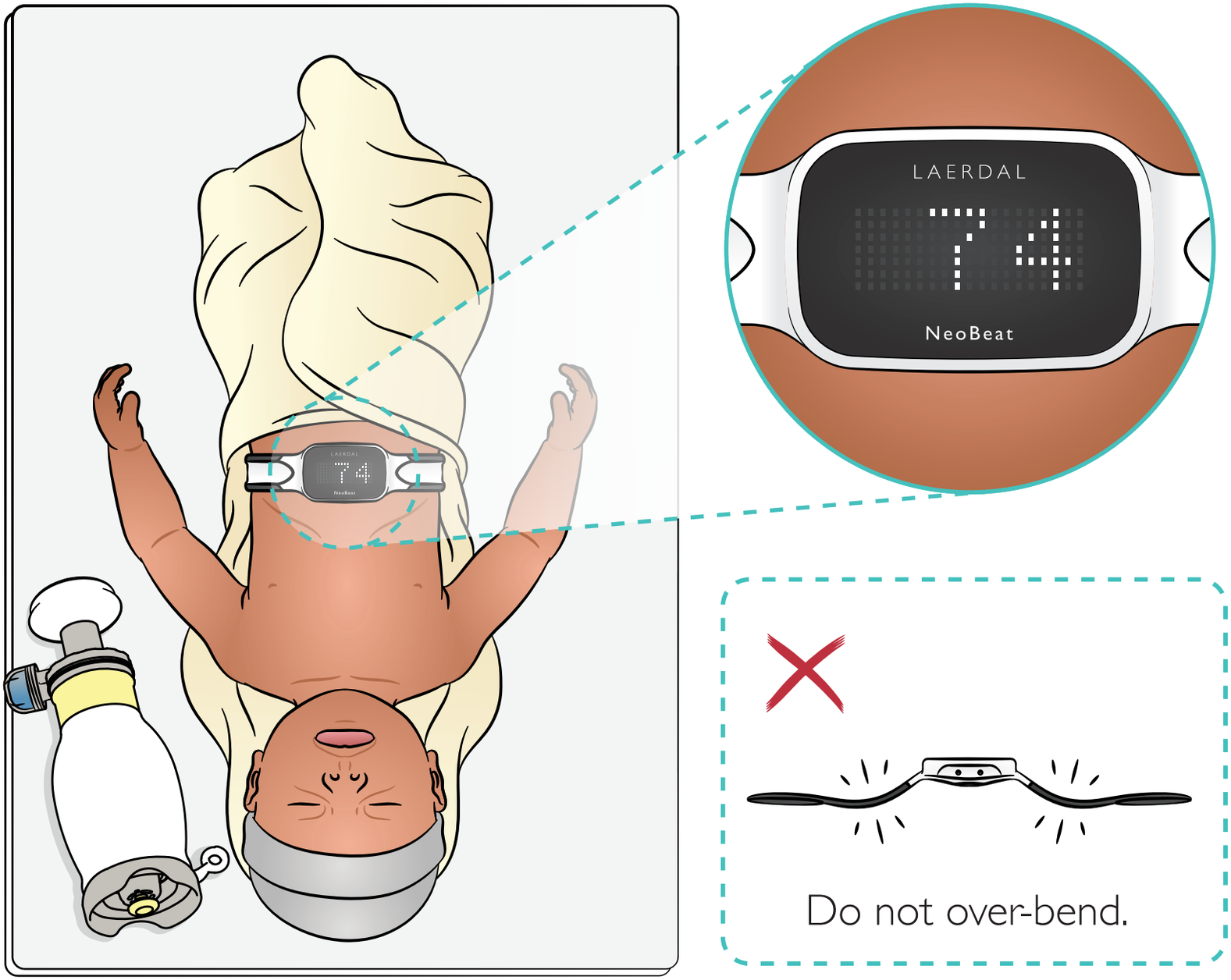

Displays

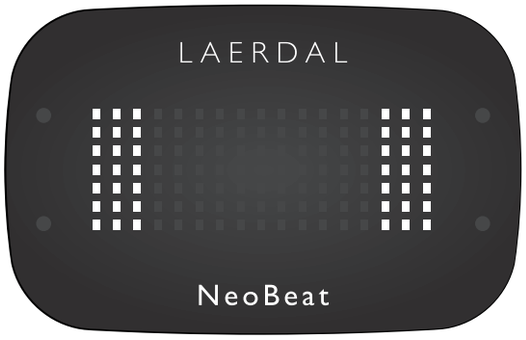

Activated

NeoBeat is activated, but there is no or inadequate patient contact. If no patient contact, the device will return to standby automatically after 10 seconds.

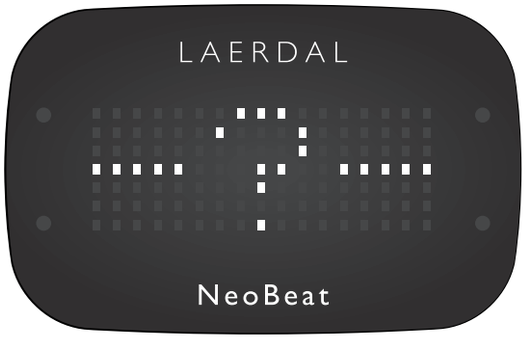

Heart rate unknown

Heart rate cannot be detected. This can be due to poor positioning of the ECG electrodes, or lack of detectable heart rate despite having good contact.

Clear detection

Heart rate is detected and there is good signal quality.

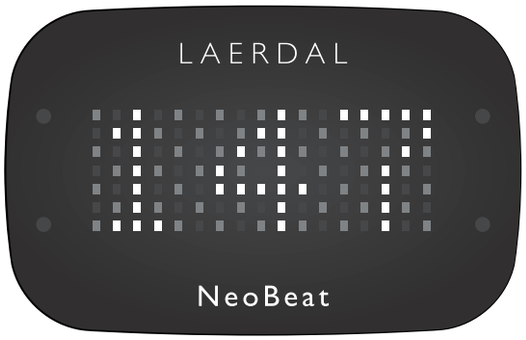

Questionable detection

Heart rate is detected, but there is questionable signal quality. This may be due to poor positioning of the device, skin is too dry or motion.

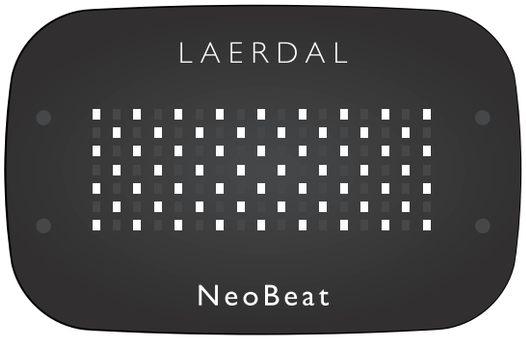

Undetectable due to motion

There is too much motion to detect heart rate.

Low battery

Battery level is low and the device should be recharged before next use. When low battery is indicated, the device will have approximately 30-60 minutes remaining run time.

⚠ Warnings

- *Decisions on when to start or end resuscitation efforts should not be made based on the output of this device alone.*
- *If an error has occurred, if the device provides no heart rate or if you do not trust the output, continue therapy without device.*
- *Handling of the newborn may cause false heart rate readings even when the patient has no heart rate (asystole). The device alone should not be used to confirm asystole/stillbirth.*

⚠ Cautions

- *Excessive patient handling and movement may cause lost or erroneous heart rate readings.*
- *Heart rate may not be detected correctly in the case of severe arrhythmia.*
- *Use of NeoBeat in a moving environment may reduce the device accuracy.*
- *Do not bend the device more than necessary for application to the newborn. Excessive bending may cause the device to become permanently deformed and damaged.*
- *Do not misuse the device; e.g. using it on adults or children, or exposing the device to hard surface impacts.*
- *Do not use the product if it is damaged or cracked.*

Notes

- *Skin contact is necessary to measure heart rate.*
- *If the patient skin is not moist (i.e. too dry), add a drop of water under the electrodes to improve performance of the device.*
- *Reposition device if no heart rate can be obtained. Moving the device closer to the heart may give a stronger signal.*
- *When excessive movement (e.g. stimulation) is detected, the device will not show a heart rate.*
- *The device detects and displays the electrical heart rate, which in some conditions (e.g. pulseless electrical activity), may not reflect presence of circulatory pulse.*
- *Another person touching the electrodes simultaneously with the patient may interfere with the heart rate measurement.*
- *The device may indicate patient contact if one of the charging pins is touched while holding one ECG electrode.*
- *If the device is placed on a conductive surface, e.g. a metal tray, it may not go to standby, thus draining the battery.*
- *The dry electrodes are intended for use on moist newborn skin, and may reduce the heart rate accuracy when used with the thicker and drier skin of e.g. an adult's fingers.*

Reprocessing

Clean and disinfect NeoBeat after each patient use to minimize the risk of cross-contamination.

⚠ Warning

Do not place a used NeoBeat back onto the charging stand before it has been cleaned and disinfected.

Cleaning

1. Clean all surfaces of NeoBeat using a cloth dampened with soapy water. To remove difficult soil, use a toothbrush dipped in lukewarm soapy water. Clean for a minimum of 2 minutes, ensuring that all soil has been removed.
2. Wipe NeoBeat with a clean cloth dampened with clean water.
3. Dry NeoBeat using a clean cloth or by air drying.

Disinfection

1. Wipe all surfaces of NeoBeat with a clean cloth soaked with 70% ethanol.
2. Spray 70% ethanol on all surfaces of NeoBeat. Ensure it remains wet for 10 minutes. Repeat spraying as necessary to account for evaporation.
3. Wipe NeoBeat with a clean cloth dampened with clean water.
4. Allow to dry completely.

⚠ Cautions

- *Effective disinfection is not possible without first performing a thorough cleaning.*
- *Care should be taken while handling the product between cleaning and disinfection.*
- *Do not submerge any of the product components in liquid (including ethanol).*
- *Do not use sodium hypochlorite (bleach) to disinfect*

Inspection

After reprocessing, inspect NeoBeat for cracks and damage with particular attention to the highlighted areas.

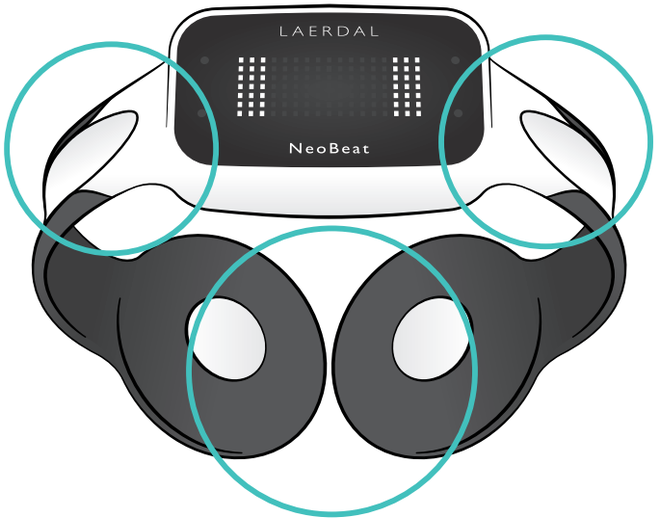

If there is any damage, remove the device from service. Otherwise, put the device back onto the Charging Stand.

Charging Stand

When needed, the Charging Stand can be cleaned and disinfected using the same method as above.

Connectivity

NeoBeat allows wireless connectivity using a Bluetooth® Low Energy wireless technology.

Possible uses are:

- Device configuration (e.g. storage mode, internal date and time).
- Firmware upgrade.
- Transfer of stored data episodes.
- Live streaming of heart rate data during clinical use. Disabled by default.

Data transfer, device configuration and firmware upgrade is only available during charging, using a tablet app. Refer to company website for more information.

NeoBeat does not have any replaceable or serviceable parts.

NeoBeat has a one-year limited warranty. Refer to company website for terms and conditions.

Troubleshooting

Symptom	Possible cause	Possible solution
Patient contact is not detected. 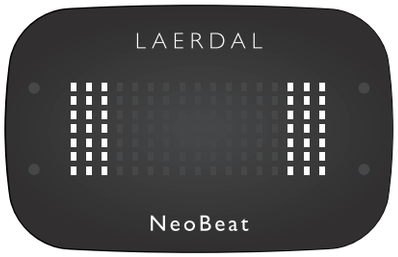	The skin is too dry for NeoBeat to detect patient contact.	Wet the electrodes with water and/or reposition the device.
Heart rate is not detected. 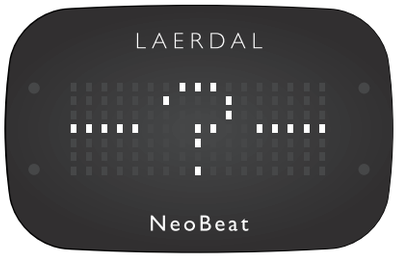	The device is misplaced or not in direct contact with patient. Or Stimulation/movement/ handling of patient temporarily generating too much noise. Or Heart rate is below 20 bpm.	Reposition the device. Moving the device closer to the heart may give a stronger signal. If the problem continues, use alternative means of measuring newborn heart rate, e.g. a stethoscope.

Symptom	Error codes	Possible solution
Critical technical error. Error code is shown in the display and error light activated. 	x01 - Program memory x02 - Calibration memory x04 - Data memory x08 - RTC crystal x10 - Display driver communication x20 - Accelerometer communication x40 - Light sensor communication x80 - ECG analog signal chain	Continue standard procedure without use of the device. Use alternative means of measuring newborn heart rate, e.g. a stethoscope. Place the device on the charging stand. If the problem persists, remove device from service.

Troubleshooting

Symptom	Possible cause	Possible solution
NeoBeat does not turn on or it turns off during use.	Battery depleted.	Continue standard procedure without use of the device. After the procedure, reprocess and charge the device. Note: it may take up to 10 minutes before the device indicates charging if the battery is very depleted. If the problem persists, remove the device from service.
Nonfunctional or damaged device detected during equipment inspection.		Remove the device from service.

Environmental	
Temperature	Operating: 0 – 40 °C (32 – 104 °F) Storage / shipping: -40 – 70 °C (-40 – 158 °F)
Atmospheric Pressure	Operating: 620 – 1060 hPa (up to 4000 meters above sea level) Storage / shipping: 550 – 1060 hPa
Relative Humidity	Up to 90%, non-condensing
Time to cool down from the maximum storage temperature until device is ready for operation	<5 minutes. (Given ambient temperature of 20 °C (68 °F))
Time to warm up from the minimum storage temperature until device is ready for operation	<5 minutes. (Given ambient temperature of 20 °C (68 °F))

Heart Rate Meter	
Dimensions	NeoBeat: 83 x 87 x 40 mm (3.2 x 3.4 x 1.6 inches) NeoBeat Mini: 70 x 70 x 40 mm (2.8 x 2.8 x 1.6 inches)
Weight:	NeoBeat: 31 g (1.1 oz) NeoBeat Mini: 27 g (1 oz)
Materials	PC, TPU, stainless steel

Specifications

Power	
Battery	Internal rechargeable lithium-ion button cell, 3.7 V, 120 mAh Typical service life of battery: 3 – 6 years depending on use
Run time	>4 hours (full charge on new battery) >3 hours (full charge at expected end of battery service life)
Charge time	Maximum 3 hours (full charge of empty battery) Note: device cannot be used clinically while charging
Battery charger	Input 100 – 240 V AC, 50 – 60 Hz, 0.3 A Output 5 V DC, 1 A

⚠ Caution

Only use provided power supply, PSAI05R-050QL6-R, or an alternative 5 W USB power supply, 5 V DC, 1 A, that is IEC 60950-1, IEC 62368-1 or IEC 60601-1 certified.

Heart Rate Measurement	
Display range	20 – 250 bpm; unknown or outside range displayed as "-?-"
Accuracy	Short term average ±10% or ±5 bpm, whichever is greater

IP Classification	
Ingress Protection	Heart rate meter: IP55 All other components: IPX0

Data recording	
Parameterized data (always on)	Heart rate, signal quality, acceleration (three axes), acceleration energy; sampled at 1 Hz
Research storage mode (optional)	Raw ECG (not diagnostic quality; sampling rate 250 Hz) and acceleration waves (sampling rate 50 Hz)
Internal data storage size	8 MB (Up to 160 hours of parameterized data; or, if research storage mode is enabled, up to 2.5 hours of parameterized data and waves.)

⚠ Warning

Do not modify this equipment without authorization of the manufacturer.

⚠ Caution

Changes or modifications not expressly approved by Laerdal Medical could void the user's authority to operate the equipment.

Federal Communications Commission (FCC) and Industry Canada (IC) Statement

This device complies with part 15 of the FCC Rules and Industry Canada's licence-exempt RSSs. Operation is subject to the following two conditions:

1. This device may not cause harmful interference, and
2. this device must accept any interference received, including interference that may cause undesired operation.

Le présent appareil est conforme aux CNR d'Industrie Canada applicables aux appareils radio exempts de licence. L'exploitation est autorisée aux deux conditions suivantes:

1. L'appareil ne doit pas produire de brouillage, et
2. L'appareil doit accepter tout brouillage radioélectrique subi, même si le brouillage est susceptible d'en compromettre le fonctionnement.

FCC ID: QHQ-20-09917

IC: 20263-2009917

Symbol Glossary	
CE 2460	The product is in compliance with the essential requirements of Council Directive 93/42/EEC as amended by Council Directive 2007/47/EC, Council Directive 2014/53/EU on Radio Equipment (RED) and Council Directive 2011/65/EU on restriction of the use of certain hazardous substances (RoHS).
	This appliance is marked according to the European directive 2012/19/EU on Waste Electrical and Electronic Equipment (WEEE).
Rx Only	Caution: Federal law restricts this device to sale by or on the order of a licensed healthcare practitioner.
IP55	Protected against ingress from dust and water jet spraying
IPX0	Not protected against liquid ingress
	Meets IEC type BF applied part leakage current requirements
	Manufacturer
	Consult User Guide
CSA US	The products is eligible to bear the CSA Mark with adjacent indicator US for US

Symbol Glossary	
	Temperature limitation
	Atmospheric pressure limitation
	Humidity limitation

Waste Handling

This appliance is marked according to the European directive 2012/19/EC on Waste Electrical and Electronic Equipment (WEEE). By ensuring this product is disposed of correctly, you will help prevent potential negative consequences for the environment and human health, which could otherwise be caused by inappropriate waste handling of this product. The symbol on the product, or on the documents accompanying the product, indicates that this appliance may not be treated as household waste. Instead it shall be handed over to the applicable collection point for the recycling of electrical and electronic equipment. Disposal must be carried out in accordance with local environmental regulations for waste disposal.
For more detailed information about treatment, recovery and recycling of this product, please contact your local city office, your household waste disposal service or Laerdal representative.

Electromagnetic Conformity

NeoBeat is intended for use in the following environments: Health care facilities except for near HF surgical equipment and the RF shielded room for magnetic resonance imaging.

No particular actions are required to maintain safety and performance with regard to electromagnetic disturbances for the expected service life.

⚠ Warnings

- *Use of this equipment adjacent to or stacked with other equipment should be avoided because it could result in improper operation. If such use is necessary, this equipment and the other equipment should be observed to verify that they are operating normally.*
- *Use of accessories, transducers and cables other than those specified or provided by the manufacturer of this equipment could result in increased electromagnetic emissions or decreased electromagnetic immunity of this equipment and result in improper operation.*
- *Portable RF communications equipment (including peripherals such as antenna cables and external antennas) should be used no closer than 30 cm (12 inches) to any part of the NeoBeat, including cables specified by the manufacturer. Otherwise, degradation of the performance of this equipment could result.*

Electromagnetic Emissions Tests

Emissions Test	Standard or test method	Compliance
RF emissions	CISPR 11	Group 1 Class B
Harmonic emissions	IEC 61000-3-2	Class A
Voltage fluctuations/ flicker emissions	IEC 61000-3-3	Complies

Electromagnetic Immunity Tests

Immunity Test	Standard or test method	Compliance Level and Immunity Test Level
Electrostatic discharge	IEC 61000-4-2	± 8 kV contact ± 2 kV, ± 4 kV, ± 8 kV, ± 15 kV air
Radiated RF EM fields	IEC 61000-4-3	3 V/m 80 MHz – 2.7 GHz 80% AM at 2 Hz
Proximity fields from RF wireless communications equipment	IEC 61000-4-3	380-390 MHz: 27 V/m 430-470 MHz: 28 V/m 704-787 MHz: 9 V/m 800-960 MHz: 28 V/m 1700-1990 MHz: 28 V/m 2400-2470 MHz: 28 V/m 5100-5800 MHz: 9 V/m
Rated power frequency magnetic fields	IEC 61000-4-8	30 A/m 50 Hz or 60 Hz

Immunity Test	Standard or test method	Compliance Level and Immunity Test Level
Electrical fast transients / bursts	IEC 61000-4-4	± 2 kV 100 kHz repetition frequency
Surges: Line-to-line	IEC 61000-4-5	± 0.5 kV, ± 1 kV
Surges: Line-to-ground	IEC 61000-4-5	± 0.5 kV, ± 1 kV, ± 2 kV
Conducted disturbances induced by RF fields	IEC 61000-4-6	3 V; 0.15 MHz – 80 MHz 6 V in ISM bands between 0.15 MHz and 80 MHz 80% AM at 1 kHz
Voltage dips	IEC 61000-4-11	0% U_T; 0.5 cycle At 0°, 45°, 90°, 135°, 180°, 225°, 270° and 315° 0% U_T; 1 cycle and 70% U_T; 25/30 cycles Single phase: at 0°
Voltage interruptions,	IEC 61000-4-11	0% U_T; 250/300 cycle
U_T is the a.c. mains voltage prior to application of the test level.		

Bluetooth® Low Energy transmitter

Frequency band: 2.400 – 2.4835 GHz
Modulation: Gaussian frequency shift modulation
Maximum radio-frequency power transmitted: 1 mW
Effective radiated power: 0 dBm

Information Available Electronically

Hold NeoBeat upside down and double tap firmly on the charging pin side to display the unique device identification (UDI), FCC ID, IC certification number and software version.

Machine Readable UDI

The GS1 DataMatrix located on the outside of the electrode arm of NeoBeat contains the UDI of the device. This barcode can be read using apps on a smart phone or tablet.

© 2018 Laerdal Medical AS. All rights reserved.

US and International patents pending.
US and international design registration pending.
Laerdal® and Neobeat® are registered trademarks of Laerdal Medical AS.

Manufactured by: Laerdal Medical AS,
P.O. Box 377
Tanke Svilandsgate 30, 4002 Stavanger,
Norway

Printed in Norway

00042374 Rev D

www.laerdalglobalhealth.com

Laerdal
helping save lives