Code		

7-AS-TW0020-GEPH61-000

Date : 2015/ 11/ 13

Approval Sheet

Description : **WIFI, I-PEX +OD1.13+110mm(含頭)**

Model No : **GEPH-057**

Part No :

Received & Approved by

ON_____date_____month_____year

新禾航電股份有限公司
SAN JOSE TECHNOLOGY, INC.

11F., No.2, Sec. 4, Jhongyang Rd., Tucheng Dist., New Taipei City, Taiwan (R.O.C), 236

Tel : +886-2-2269-4456 **Fax : +886-2-2269-4451**

E-mail : sanav@sanav.com http://www.sanav.com

Approved by	Checked by	Issued by	
Jacky	Sky	Lily Chen	

表單編號：FM-RD-012 A1

Document Amendments (Change History)

Revision	Date	Change Cause	Change Page/ Contents
1.0	2015/11/13	Initial Release	

SPECIFICATION	
1.Description	WIFI Antenna
2.Model	GEPH-057
3.Mechanical Characteristics	
Connector Type	I-PEX
Cable	OD1.13(Black)
Length	110mm±3mm
RoHS Compliant	Yes
4.Electrical Characteristics	
Operating Frequency	2400~2500MHz/5150~5850MHz
Antenna Type	Dipole
Impedance	50ohm
Polarization	Linear
Gain	See Fig-2
5.Operating Temperature	-40℃~80℃
6.Storage Temperature	-40℃~85℃
7.Humidity	Non-condensing 65°C 95% RH

ELECTRICAL CHARACTERISTICS 電氣特性			
ITEM 項目		**TEST CONDITION** 測試環境	**SPECIFICATION** 規格
1	**RETURN LOSS** 反射損耗	Using Anritsu Network Analyzer MS-4624B to Measure Antenna S11 Return loss Characteristics 使用 Anritsu 網路分析儀 MS-4624B 測量天線 S11 之返回損耗參數	See Fig-1
2	**VSWR** 電壓駐波比	Using Anritsu Network Analyzer MS-4624B to Measure Antenna S11 VSWR Characteristics 使用 Anritsu 網路分析儀 MS-4624B 測量天線 S11 之電壓駐波參數	

	發行日期:	A1.0
	修正日期:	
	受控日期	
品名: WIFI Antenna	客戶:NEXCOM	規格

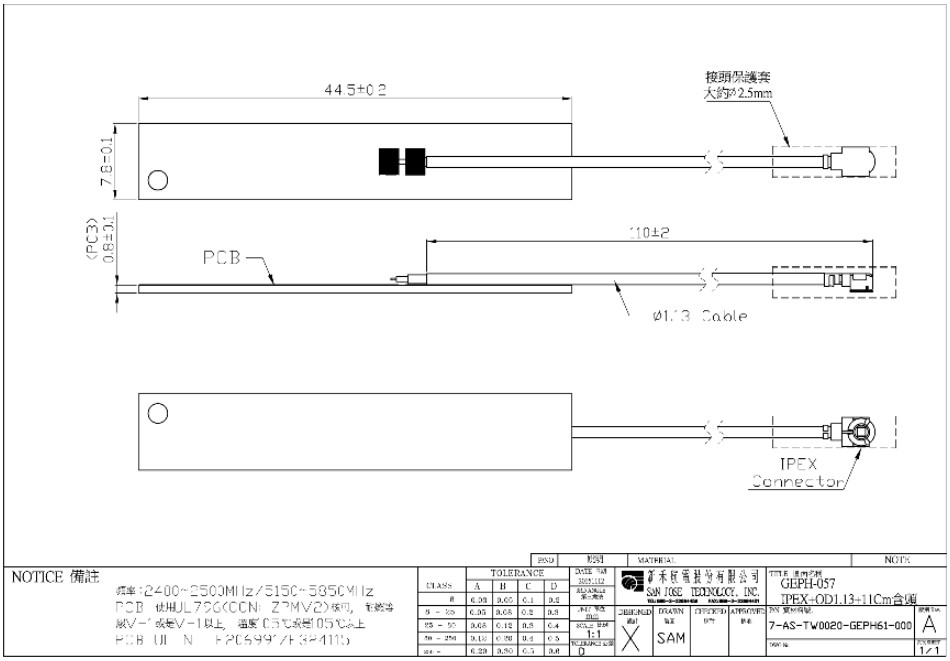

Operating Frequency :
2400MHz~2500MHz
5150MHz~5850MHz

Impedance:50ohm

Connector: I-PEX

檢驗項目	品質要求	檢驗方式	檢驗標準
外觀	不可有明顯刮傷、破損	目視(亮度100Lux，正常視力，視距30cm，視角30°-80°)	參照樣品
尺寸	尺寸如示意圖:長度 44.5mm X 寬 7.8mm X 高 0.8mm 線材部份: 長 110mm +/-2mm	1. 游標卡尺 2. 捲尺	承認書
機械性能		1. 拉力計 2. 高斯計	承認書
電氣性能	Transmission	1. 網路分析儀	承認書

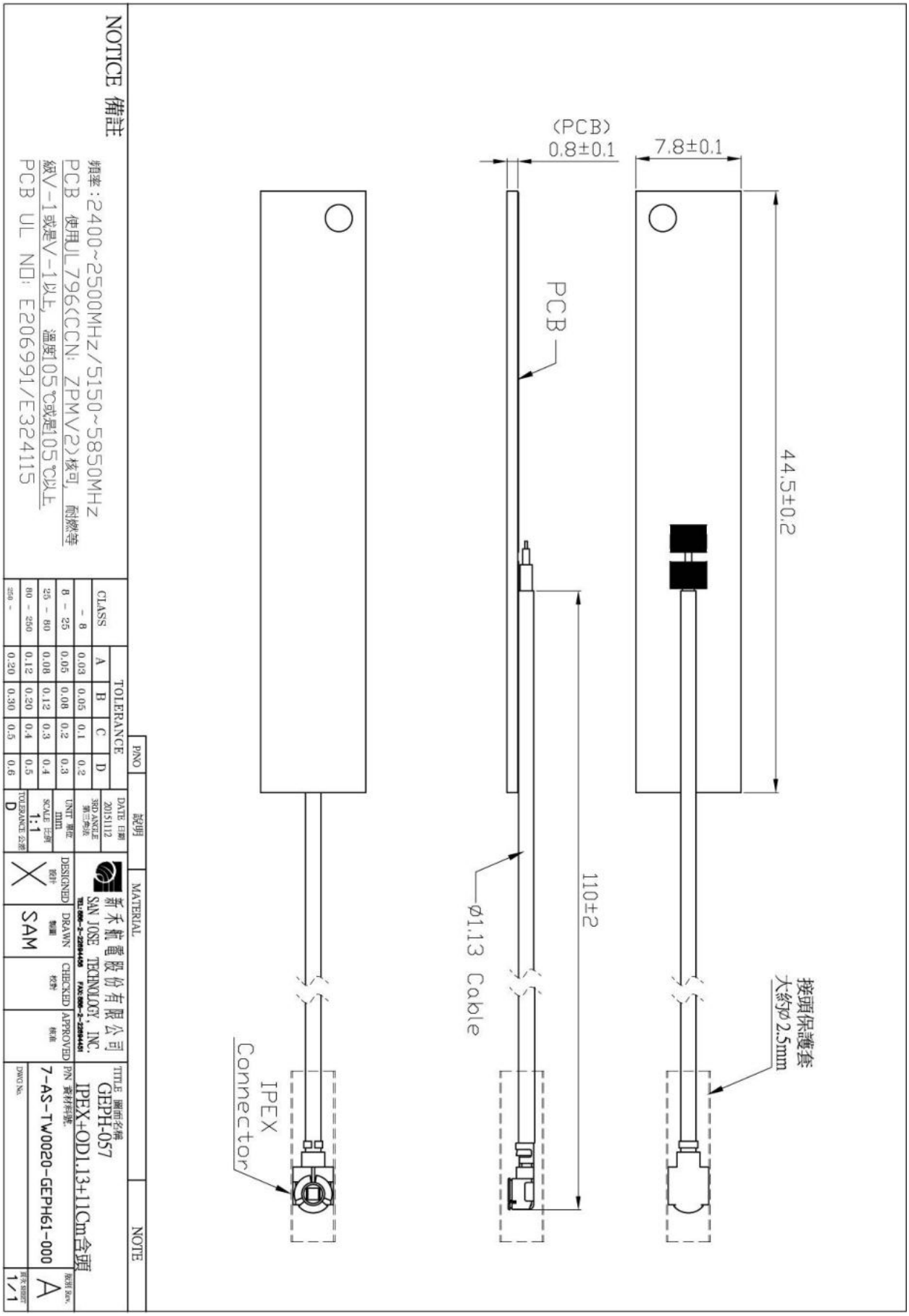
(PCB)
0.8±0.1
7.8±0.1
44.5±0.2
PCB
110±2
ø1.13 Cable
接頭保護套
大約ø2.5mm
IPEX
Connector
NOTICE 備註
頻率:2400~2500MHz/5150~5850MHz
PCB 使用UL796(CCN: ZPMV2)核可, 耐燃等
級V-1或是V-1以上, 溫度105℃或是105℃以上
PCB UL NO: E206991/E324115
CLASS
TOLERANCE
A
B
C
D
- 8
0.03
0.05
0.1
0.2
8 - 25
0.05
0.08
0.2
0.3
25 - 80
0.08
0.12
0.3
0.4
80 - 250
0.12
0.20
0.4
0.5
250 -
0.20
0.30
0.5
0.6
P/NO
說明
MATERIAL
NOTE
DATE 日期
20151112
3RD ANGLE
第三角法
UNIT 單位
mm
SCALE 比例
1:1
TOLERANCE 公差
D
DESIGNED 設計
DRAWN 繪圖
SAM
CHECKED 校對
APPROVED 核准
新禾航電股份有限公司
SAN JOSE TECHNOLOGY, INC.
TITLE 圖面名稱
GEPH-057
IPEX+OD1.13+11Cm含頭
P/N 資材料號
7-AS-TW0020-GEPH61-000
版次 Rev.
A
DWG No.
張次 SHEET
1/1

Antenna Return Loss:

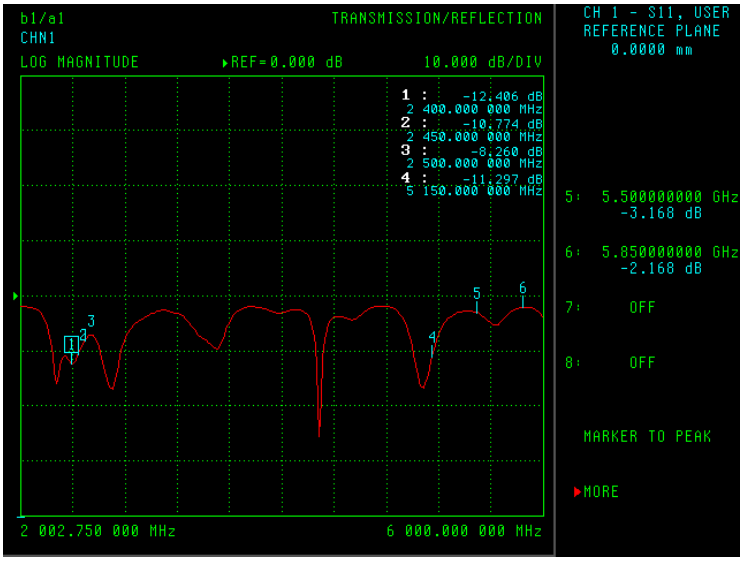

Fig-1

Antenna 3D Gain:

3D Gain and Efficiency Report are scanned in SANAV 3D chamber, under CTIA regulation.

Frequency (MHz)	2400	2450	2485	5150	5550	5850
Efficiency (%)	40.82	53.87	45.01	26.18	16.27	16.85
Gain (dBi)	1.59	3.96	3.43	1.78	-1.59	-0.37
Average Gain (dB)	-3.89	-2.69	-3.47	-5.82	-7.89	-7.74

Fig-2

SPECIFICATION

Style	UL 1979 105℃ 30V	Document No : WT11300B00	
Size	32AWG	Established Date : 2006/01/09	
Standard :			
Conductor	Size	AWG	32
	Material	----	Silver-Coated Copper
	Conductors No.	----	7
	Construction Size	mm	0.080
	Stranded Diameter	mm	0.240
Insulation	Material	----	FEP
	Color	----	Clear
	Average Thickness	mm	0.22
	Diameter	mm	0.68 ± 0.02
Braid Shield	Material	----	Tinned-Coated Copper
	Construction	mm	16 / 4 / 0.050
	Coverage	%	90
	Diameter	mm	0.90 ±0.03
Jacket	Material	----	FEP
	Color	----	Black
	Average Thickness	mm	0.13
	Overall Diameter	mm	1.13 ±0.05
Marking	Non		
Drawing	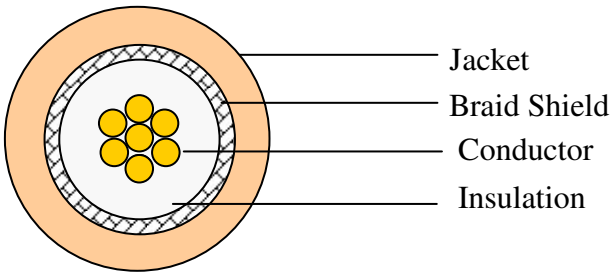		

Approval : Kenneth Ho Confirm : Keep Wu Maker : Liang Chen

SPECIFICATION

Electrical & Physical Properties			
Item			32AWG
Rating Temp Voltage			105℃ 30V
Conductor Resistance			545 OHM / KM / 20℃ MAX.
Insulation Resistance			1000 MEGA OHM/KM MIN.
Dielectric Strength			AC 1.0KV/Minute
Spark Test			2.5 KV
Insulation	Unaged	Tensile Strength	2500 PSI MIN. (1.76 Kg / ㎟)
		Elongation	200% MIN.
	Aged	Tensile Strength	UNAGED MIN. 75% (168HRS×232℃)
		Elongation	UNAGED MIN. 75% (168HRS×232℃)
Jacket	Unaged	Tensile Strength	2500 PSI MIN. (1.76 Kg / ㎟)
		Elongation	200% MIN.
	Aged	Tensile Strength	UNAGED MIN. 75% (168HRS×232℃)
		Elongation	UNAGED MIN. 75% (168HRS×232℃)
Nom. Impedance			50 ± 3 Ohms
Nom. Capacitance			96 ± 3 pF/m
Nom. Vel. of Prop.			69%
VSWR Test (0 – 6 GHZ)			Less 1.3
Flame Test			VW-1 OK

Attenuation (dB/1m)	1GHZ	2GHZ	2.4GHZ	3GHZ	5GHZ	6GHZ
	2.00	3.02	3.35	3.81	5.02	5.22

Approval : Kenneth Ho Confirm : Keep Wu Maker : Liang Chen

I-PEX Plug 20278插拔力測試

Model Name		I-PEXPlug 20278									
插拔力(N MIN)		**Initial 5 N MIN以上, after 30 cycles 3N MIN以上**									
		Sample1	Sample2	Sample3	Sample4	Sample5					
Raw data	Test 1	5.30	5.30	5.2	5.2	5.30					
	Test 2	5.30	5.20	5.2	5.2	5.30					
	Test 3	5.30	5.20	5.2	5.1	5.10					
	Test 4	5.30	5.10	5.1	5.1	5.10					
	Test 5	5.30	5.10	5.1	5.1	5.10					
	Test 6	5.20	5.00	5.0	5.0	5.00					
	Test 7	5.20	5.00	5.0	5.0	5.00					
	Test 8	5.00	5.00	5.0	5.0	5.00					
	Test 9	5.00	5.00	5.0	4.9	4.90					
	Test 10	4.80	5.00	5.0	4.8	4.90					
	Test 11	4.90	4.80	5.0	4.8	4.80					
	Test 12	4.80	4.80	4.7	4.7	4.80					
	Test 13	4.70	4.70	4.7	4.7	4.70					
	Test 14	4.70	4.70	4.7	4.7	4.70					
	Test 15	4.60	4.70	4.6	4.6	4.60					
	Test 16	4.50	4.50	4.6	4.5	4.50					
	Test 17	4.50	4.50	4.5	4.4	4.40					
	Test 18	4.50	4.50	4.5	4.4	4.40					
	Test 19	4.30	4.50	4.5	4.2	4.10					
	Test 20	4.20	4.30	4.2	4.2	4.10					
	Test 21	4.20	4.20	4.2	4.0	4.10					
	Test 22	4.20	4.20	4.2	4.0	4.10					
	Test 23	4.10	4.00	4.2	4.0	3.90					
	Test 24	4.10	4.00	4.1	3.9	3.90					
	Test 25	4.00	3.90	4.1	3.9	3.80					
	Test 26	4.00	3.70	4.0	3.8	3.70					
	Test 27	4.00	3.70	3.9	3.8	3.70					
	Test 28	3.80	3.60	3.7	3.7	3.70					
	Test 29	3.80	3.60	3.6	3.6	3.60					
	Test 30	3.60	3.50	3.5	3.5	3.60					

PRODUCT SPECIFICATION
製 品 規 格

No. PRS-1176

MHF series micro coaxial connector
(Product No. Plug 20278, Rec. 20279)

Qualification Test Report No. TR-1021, TR-08020

8	S08038	K.O	Feb/29/'08	E.K	Prepared by	Reviewed by	Approved by
7	S3008	K.O	MAR/24/'03	K.K	K.Ohbayashi	E,Kawabe	K.Katabuchi
6	S2084	K.O	DEC/19/'02	K.K			
REV.	ECN	BY	DATE	APP.	JUN / 25 / 01	Jun / 25 / 01	Jun / 29 / 01
REVISION RECORD							

DOCUMENT CLASSIFICATION	TITLE	No.
Product Specification 製品規格	MHF series micro coaxial connector	PRS-1176

1. Scope ／ 序言

MHF series micro coaxial connector is a wire to board connector for AWG#36,32,30 coaxial cable .
MHF series micro coaxial connector は、AWG＃36,32,30同軸ケーブルの基板対ワイヤーコネクタである。

2. Objectives ／ 目的

This specification covers the requirements for product performance and test methods of MHF series microcoaxial connector
本規格は、MHF series micro coaxial connector の性能と試験条件について規定する。

3. Part No. , construction , material and finish ／ 構成、材料及び仕上げ

(1) Part No. Plug : 20278-＊＊＊R-08,-13,-32,-18 , Receptacle : 20279-001E-01
(2) Construction, material and finish of the connector are covered as each drawings.
構成、材料及び仕上げは、各図面に指定されている通りとする。

4. Applicable cable ／ 適合ケーブル

4-1 Part No. 20278-101R-08, 20278-111R-08, 20278-102R-08, 20278-112R-08

(1) Description

Inner conductor : AWG#36(7/0.05)
Silver plating annealed copper wire or silver plating tin-copper alloy
Dielectric core : Fluoro-plastics ,diameter 0.4(+0.04,-0.02)mm , nominal thickness 0.125mm
Outer conductor : 8/5/0.05 , nominal diameter 0.65mm , silver plating annealed copper wire
Jacket : Fluoro-plastics , diameter 0.81(+0.04,-0.02)mm , nominal thickness 0.08mm

(2) Requirements

Characteristic impedance : 50(+2,-2)ohm by TDR method
Nominal capacitance(Reference value): 96 pF/m
Conductor resistance of inner conductor at 293K (20℃)(Reference value) : 1400 ohm/km
Insulation resistance : 1000 mega-ohm.km MIN.
Dielectric withstand voltage : no breakdown at AC1000V for 1 minutes.

(1) 構成

中心導体 ： AWG＃36(7／0. 05),銀メッキ軟銅線または銀メッキすず入り銅線
誘電体 ： フッ素樹脂,外径0. 4(＋0. 04,－0. 02),標準厚さ0. 125mm
外部導体 ： 8／5／0. 05,標準外径0. 65mm, 銀メッキ軟銅線
ジャケット ： フッ素樹脂,外径0. 81(＋0. 04,－0. 02)mm, 標準厚さ0. 08mm

(2) 仕様

特性インピーダンス ： 50±2Ω (TDR)
標準静電容量(参考値) ： 96pF／m
293K(20℃)時の中心導体導体抵抗(参考値) ： 1400Ω ／km
絶縁抵抗 ： 1000MΩ ・km以上
耐電圧 ： AC1000V・1分間にて絶縁破壊の無い事

4-2 Part No. 20278-101R-13, 20278-111R-13, 20278-102R-13, 20278-112R-13

(1) Description

Inner conductor : AWG#32(7/0.08)
Silver plating annealed copper wire or silver plating tin-copper alloy
Dielectric core : Fluoro-plastics , diameter 0.68(+0.04,-0.02)mm , nominal thickness 0.22mm
Outer conductor : 16/4/0.05 , nominal diameter 0.93mm , silver plating annealed copper wire
Jacket : Fluoro-plastics , diameter 1.13(+0.08,-0.05)mm , nominal thickness 0.1mm

DOCUMENT CLASSIFICATION	TITLE	No.
Product Specification 製品規格	MHF series micro coaxial connector	PRS-1176

(2) Requirements
Characteristic impedance : 50(+2,-2)ohm by TDR method
Nominal capacitance(Reference value): 97 pF/m
Conductor resistance of inner conductor at 293K (20℃)(Reference value) : 520 ohm/km
Insulation resistance : 1500 mega-ohm.km MIN.
Dielectric withstand voltage : no breakdown at AC1000V for 1 minutes.

(1) 構成
中心導体 ： AWG＃32(7／0. 08),銀メッキ軟銅線または銀メッキすず入り銅線
誘電体 ： フッ素樹脂,外径0. 68(＋0. 04,－0. 02),標準厚さ0. 22mm
外部導体 ： 16／4／0. 05,標準外径0. 93mm, 銀メッキ軟銅線
ジャケット ： フッ素樹脂,外径1. 13(＋0. 08,－0. 05)mm, 標準厚さ0. 1mm

(2) 仕様
特性インピーダンス ： 50±2Ω (TDR)
標準静電容量(参考値) ： 97pF／m
293K(20℃)時の中心導体導体抵抗(参考値) ： 520Ω ／km
絶縁抵抗 ： 1500MΩ ・km以上
耐電圧 ： AC1000V・1分間にて絶縁破壊の無い事

4-3 Part No. 20278-101R-32, 20278-111R-32, 20278-102R-32, 20278-112R-32

(1) Description
Inner conductor : AWG#32(7/0.08)
Silver plating annealed copper wire or silver plating tin-copper alloy
Dielectric core : Fluoro-plastics , diameter 0.66(+0.05,-0.05)mm , nominal thickness 0.21mm
First outer conductor : 16/5/0.05, tin plating annealed copper wire
Second outer conductor :16/6/0.05, nominal diameter 1.12mm , tin plating annealed copper wire
Jacket : Fluoro-plastics , diameter 1.32(+0.1,-0.1)mm , nominal thickness 0.1mm

(2) Requirements
Characteristic impedance : 50(+2,-2)ohm by TDR method
Nominal capacitance(Reference value): 95 pF/m
Conductor resistance of inner conductor at 293K (20℃) (Reference value) : 520 ohm/km
Insulation resistance : 1500 mega-ohm.km MIN.
Dielectric withstand voltage : no breakdown at AC1000V for 1 minutes.

(1) 構成
中心導体 ： AWG＃32(7／0. 08),銀メッキ軟銅線または銀メッキすず入り銅線
誘電体 ： フッ素樹脂,外径0. 66(＋0. 05,－0. 05),標準厚さ0. 21mm
外部導体(内側) ： 16／5／0. 05,すずメッキ軟銅線
外部導体(外側) ： 16／6／0. 05,標準外径1. 12mm, すずメッキ軟銅線
ジャケット ： フッ素樹脂,外径1. 32(＋0. 1,－0. 1)mm, 標準厚さ0. 1mm

(2) 仕様
特性インピーダンス ： 50±2Ω (TDR)
標準静電容量(参考値) ： 95pF／m
293K(20℃)時の中心導体導体抵抗(参考値) ： 520Ω ／km
絶縁抵抗 ： 1500MΩ ・km以上
耐電圧 ： AC1000V・1分間にて絶縁破壊の無い事

DOCUMENT CLASSIFICATION	TITLE	No.
Product Specification 製品規格	MHF series micro coaxial connector	PRS-1176

4-4 Part No. 20278-101R-18, 20278-111R-18, 20278-102R-18, 20278-112R-18
RG178 B/U

(1) Description

Inner conductor : AWG#30(7/0.102) , silver plating copper clad steel wire
Dielectric core : Fluoro-plastics , diameter 0.84(+0.03,-0.03)mm , nominal thickness 0.268mm
Outer conductor : 16/3/0.1 , nominal diameter 1.35mm , silver plating copper wire
Jacket : Fluoro-plastics , diameter 1.8(+0.1,-0.1)mm , nominal thickness 0.23mm

(2) Requirements

Characteristic impedance : 50(+2,-2)ohm by TDR method
Nominal capacitance(Reference value): 95 pF/m
Conductor resistance of inner conductor at 293K (20℃) (Reference value) : 805 ohm/km
Insulation resistance : 1500 mega-ohm.km MIN.
Dielectric withstand voltage : no breakdown at AC2000V for 1 minutes.

(1) 構成

中心導体 ： AWG＃30(7／0. 102),銀メッキ銅被鋼線
誘電体 ： フッ素樹脂,外径0. 84(±0. 03),標準厚さ0. 268mm
外部導体 ： 16／3／0. 1,標準外径1. 35mm, 銀メッキ軟銅線
ジャケット ： フッ素樹脂,外径1. 8(±0. 1)mm, 標準厚さ0. 23mm

(2) 仕様

特性インピーダンス ： 50±2Ω (TDR)
標準静電容量(参考値) ： 95pF／m
293K(20℃)時の中心導体導体抵抗(参考値)： 805Ω ／km
絶縁抵抗 ： 1500MΩ ・km以上
耐電圧 ： AC2000V・1分間にて絶縁破壊の無い事

5. Ratings ／ 定格

(1) Rated voltage / 電圧 ： AC60Vrms
(2) Nominal characteristic impedance／公称特性インピーダンス ： 50Ω
(3) Frequency / 周波数 ： DC～6GHz
(4) VSWR : Plug1.3 MAX at 0.1~3GHz 1.5 MAX at 3~6GHz
Receptacle 1.3 MAX at 0.1~3GHz. 1.4 MAX at 3~6GHz
(5) Service Temperature / 使用温度範囲 ： 233～363K(－40～＋90℃)

6. Test methods and performance ／ 試験及び性能

6-1 Test condition / 試験条件

Unless otherwise specified, all tests and measurements shall be performed under the following conditions in accordance with MIL-STD-202
全ての測定と試験は、MIL-STD-202 に基づき以下の条件で行う。

Temperature / 温度 ： 288～308K (15～35℃)
Humidity / 湿度 ： 45～75%RH

DOCUMENT CLASSIFICATION	TITLE	No.
Product Specification 製品規格	MHF series micro coaxial connector	PRS-1176

6-2-1 Electrical / 電気的性能

(1) Contact Resistance / 接触抵抗

A.Testing:Solder the receptacle connector to the test board and mate the plug connector together, then measure the contact resistance as shown in Fig.1 by the four terminal method. Apply the low level condition in accordance with MIL-STD-202, Method 307.

Open circuit voltage : 20mV MAX
Circuit current : 10mA MAX. (DC or AC1kHz)
Contact resistance of inner contact : <resistance of A-E> - <resistance of B-E>
Contact resistance of ground contact : <resistance of A-D> - <resistance of B-D>

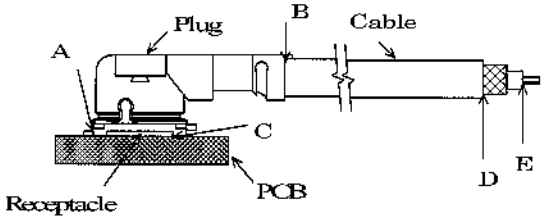

Fig.1

B.Requirements :

Contact resistance of inner contact initial 20 milli-ohm MAX. after testing 25milli-ohm MAX.
Contact resistance of ground contact initial 10 milli-ohm MAX. after testing 15milli-ohm MAX.

A.試験法:テスト基板にリセプタクルコネクタを半田付けし、プラグコネクタと嵌合させ、Fig. 1のように4端子法にて下記の条件で測定する。 MIL-STD-202 試験法 307 に準拠。

開回路電圧: 20mV以下
試験電流 : 10mA(DCもしくはAC1kHz)
中心導体 : ＜A－E間の電気抵抗＞－＜B－E間の電気抵抗＞
外部導体 : ＜A－D間の電気抵抗＞－＜B－D間の電気抵抗＞

B.必要条件: 中心導体 初期 20mΩ 以下, 試験後 25mΩ 以下
外部導体 初期 10mΩ 以下, 試験後 15mΩ 以下

(2) Insulation resistance / 絶縁抵抗

A. Testing : Mate the plug and receptacle connector together, then apply DC 100 V between the inner contact and the ground contact in accordance with MIL-STD-202, Method 302.

B.Requirements : Initial 500 Mohm MIN. after testing 100 Mohm MIN.

A.試験法: リセプタクル及びプラグコネクタを互いに嵌合させ、中心導体と外部導体の間に DC 100Vを印加し、測定する。MIL-STD-202 試験法 302 に準拠。

B.必要条件: 初期 500MΩ 以上 試験後 100MΩ 以上

(3) Dielectric withstanding voltage / 耐電圧

A. Testing : Mate the receptacle and plug connector together, then apply AC 200 Vrms between the inner contact and the ground contact for a minute in accordance with MIL-STD-202, Method 301.

B.Requirements : No creeping discharge, flashover, nor insulator breakdown shall occur.

A.試験法: リセプタクル及びプラグコネクタを互いに嵌合させ、中心導体と外部導体の間にAC200V(実効値)を一分間印加する。 MIL-STD-202 試験法 301 に準拠。

B.必要条件: 沿面放電、空中放電、絶縁破壊等の異常のないこと。

DOCUMENT CLASSIFICATION	TITLE	No.
Product Specification 製品規格	MHF series micro coaxial connector	PRS-1176

(4) VSWR

A. Testing : Measure the VSWR as shown in Fig.3 by the network analyzer.
Frequency :100M~6GHz

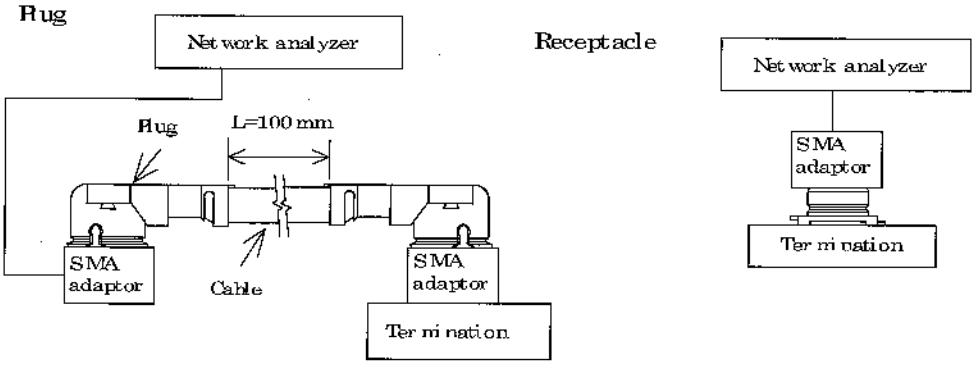

Fig 3

B.Requirements : Plug1.3 MAX at 0.1~3GHz 1.5 MAX at 3~6GHz
Receptacle 1.3 MAX at 0.1~3GHz. 1.4 MAX at 3~6GHz

A.試験法: ネットワークアナライザーにて Fig.3 のようにVSWRを測定する。
周波数 : 100M～6GHz

B.必要条件: Plug 1. 3以下 0. 1～3GHz 1. 5以下 3～6GHz
Receptacle 1. 3以下 0. 1～3GHz 1. 4以下 3～6GHz

6-2-2 Mechanical / 機械的性能

(1) Unmating force / 抜去力

A. Testing : Unmate the receptacle connector (soldered to the test board) and plug at a speed 25±3mm/minutes along the mating by the push-on/pull-off machine .

B.Requirements :
Total unmating force : Initial 5N MIN. after 30 cycles 3N MIN.
Unmating force of inner contact : Initial 0.15N MIN. after 30 cycles 0.1N MIN

A.試験法:挿抜試験機を用いて、基板に半田付けしたリセプタクルとプラグを嵌合軸と平行に毎分25±3mmの速度で挿抜する。

B.必要条件:
総合抜去力:初回抜去力 5N以上 ,30回後抜去力 3N以上
中心導体 :初回抜去力 0. 15N以上 ,30回後抜去力 0. 1N以上

(2) Crimp strength / 引張強度

A.Testing : Pull the cable as shown in Fig.5 at a speed 25±3mm/minutes by tensile strength machine.

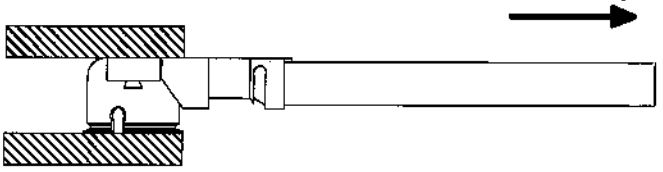

Fig.5

B.Requirements : 20278-1＊＊R-08,13,32 : 10N MIN, 20278-1＊＊R-18 : 15N MIN,

A.試験法:引張試験機を用いて、毎分25±3mmの速度でケーブルを引張り、強度を測定する。

B.必要条件: 20278-1＊＊R-08,13,32 : 10N以上, 20278-1＊＊R-18 : 15N以上

DOCUMENT CLASSIFICATION	TITLE	No.
Product Specification 製品規格	MHF series micro coaxial connector	PRS-1176

(3) Durability / 耐久性

A. Testing : Mate and umate the receptacle connector (soldered to the test board) and plug 30 cycles at a speed 25±3mm/minutes along the mating by the push-on/pull-off machine .

B.Requirements :

Contact resistance of inner contact initial 20 milli-ohm MAX. after testing 25milli-ohm MAX.
Contact resistance of ground contact initial 10 milli-ohm MAX. after testing 15milli-ohm MAX.

A.試験法:挿抜試験機を用いて、基板に半田付けしたリセプタクルとプラグを嵌合軸と平行に毎分25±3mmの速度で30回挿抜する。

B.必要条件 中心導体接触抵抗 ： 初期 20mΩ 以下，試験後 25mΩ 以下
外部導体接触抵抗 ： 初期 10mΩ 以下，試験後 15mΩ 以下

(4) Contact resistance with force on the cable / ケーブルに荷重を加えた後の接触抵抗

A. Testing : Apply force on the cable as shown in Fig.2.
During the testing, run 100mA DC to check electrical discontinuity.

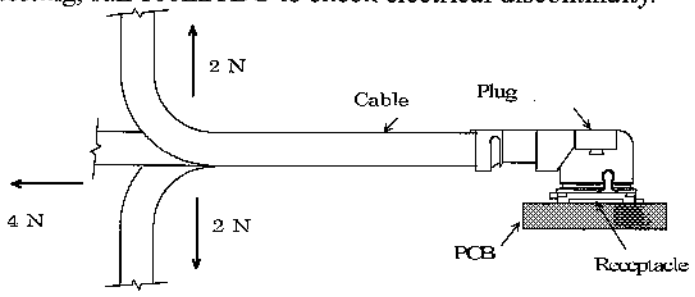

Fig.2

B.Requirements

Appearance : Looseness between the parts, chipping, breakage or other abnormality shall not occur.
Electrical discontinuity : No electrical discontinuity grater than 1 micro-sec. shall occur.
Contact resistance of inner contact initial 20 milli-ohm MAX. after testing 25milli-ohm MAX.
Contact resistance of ground contact initial 10 milli-ohm MAX. after testing 15milli-ohm MAX.

A.試験法:Fig. 2のようにケーブルに力を加える。尚、試験中にDC100mAの電流を流して電気的瞬断を確認する。

B.必要条件 外観 ： 部品のゆるみ、欠け、割れ、その他外観上の異常の無いこと。
電流瞬断 ： 試験中、1マイクロ秒を超える電気的瞬断の無いこと。
中心導体接触抵抗 ： 初期 20mΩ 以下，試験後 25mΩ 以下
外部導体接触抵抗 ： 初期 10mΩ 以下，試験後 15mΩ 以下

(5) Vibration / 振動

A. Testing : Apply the following vibration to the mating connector .
During the testing, run 100mA DC to check electrical discontinuity.
Frequency : 10Hz → 100Hz → 10Hz / approx 15 minutes.
Half amplitude ,Peak value of acceleration: 1.5mm or 59m/s^2 (6G)
Directions , cycle : 3 mutually perpendicular direction ,
5 cycles(approx 75min)about each direction

B.Requirements

Appearance : Looseness between the parts, chipping, breakage or other abnormality shall not occur.
Electrical discontinuity : No electrical discontinuity grater than 1micro-sec. shall occur.
Contact resistance of inner contact initial 20 milli-ohm MAX. after testing 25milli-ohm MAX.
Contact resistance of ground contact initial 10 milli-ohm MAX. after testing 15milli-ohm MAX.

DOCUMENT CLASSIFICATION	TITLE	No.
Product Specification 製品規格	MHF series micro coaxial connector	PRS-1176

A.試験法：嵌合状態のコネクタを、下記の振動を加える。尚、試験中にDC100mAの電流を流して電気的瞬断を確認する。

周波数 ：10Hz→100Hz→10Hz ／ 約15分間
片振幅,加速度：1. 5mm or 59m／s^2 (6G)
方向,サイクル：3 つの互いに直角な方向について各5サイクル(約75分)実施

B.必要条件 外観 ： 部品のゆるみ、欠け、割れ、その他外観上の異常の無いこと。
電流瞬断 ： 試験中、1 マイクロ秒を超える電気的瞬断の無いこと。
中心導体接触抵抗 ： 初期 20mΩ 以下, 試験後 25mΩ 以下
外部導体接触抵抗 ： 初期 10mΩ 以下, 試験後 15mΩ 以下

(6) Shock / 衝撃

A. Testing : Apply the following vibration to the mating connector in accordance with MIL-STD-202, Method 213, Condition B. During the testing, run 100mA DC to check electrical discontinuity.

Peak value of acceleration: 735m/s^2 (75G)
Duration : 11msec
Wave Form : half sinusoidal
Directions , cycle : 6 mutually perpendicular direction , 3 cycles about each direction

B.Requirements

Appearance : Looseness between the parts, chipping, breakage or other abnormality shall not occur.
Electrical discontinuity : No electrical discontinuity grater than 1 micro-sec. shall occur.
Contact resistance of inner contact initial 20 milli-ohm MAX. after testing 25milli-ohm MAX.
Contact resistance of ground contact initial 10 milli-ohm MAX. after testing 15milli-ohm MAX.

A.試験法：嵌合状態のコネクタを、衝撃試験機に取り付け、下記の衝撃を加える。尚、試験中にDC100mAの電流を流して電気的瞬断を確認する。MIN-STD-202 試験法 213 試験条件 B に準拠。

最大加速度：735m／s^2(75G)
標準持続時間：11msec.
波形： 半波正弦波
方向：直交する6方向、各3回

B.必要条件 外観 ： 部品のゆるみ、欠け、割れ、その他外観上の異常の無いこと。
電流瞬断 ： 試験中、1 マイクロ秒を超える電気的瞬断の無いこと。
中心導体接触抵抗 ： 初期 20mΩ 以下, 試験後 25mΩ 以下
外部導体接触抵抗 ： 初期 10mΩ 以下, 試験後 15mΩ 以下

6-2-3 Environmental / 耐環境性

(1) Thermal shock/ 温度サイクル

A. Testing : Apply the following environment to the mating connector .

Temperature ,duration
:233K/30minutes→278~308K/5minutes MAX.→363K/30minutes→278~308K/5minutes MAX.
(-40℃) (5~35℃) (90℃) (5~35℃)
No. of cycles : 5 cycles

B.Requirements

Appearance : Looseness between the parts, chipping, breakage or other abnormality shall not occur.
Contact resistance of inner contact initial 20 milli-ohm MAX. after testing 25milli-ohm MAX.
Contact resistance of ground contact initial 10 milli-ohm MAX. after testing 15milli-ohm MAX.
Insulation resistance : initial 500 mega-ohm MIN. after testing 100 mega-ohm MIN.

DOCUMENT CLASSIFICATION	TITLE	No.
Product Specification 製品規格	MHF series micro coaxial connector	PRS-1176

A.試験法：嵌合状態のコネクタを、下記の雰囲気に放置する。
1サイクルの条件
：233K／30分→278～308K／5分以下→363K／30分→278～308K／5分以下
（－40℃） （5～35℃） （90℃） （5～35℃）
実施サイクル ：5サイクル
B.必要条件 外観 ： 部品のゆるみ、欠け、割れ、その他外観上の異常の無いこと。
中心導体接触抵抗 ： 初期 20mΩ 以下，試験後 25mΩ 以下
外部導体接触抵抗 ： 初期 10mΩ 以下，試験後 15mΩ 以下
絶縁抵抗 ： 初期 500MΩ 以上 試験後 100MΩ 以上

(2) Humidity / 湿度
A. Testing : Apply the following environment to the mating connector in accordance with MIL-STD-202, Method 103, Condition B .
Temperature : 313±2 K (40±2℃)
Humidity : 90～95%RH
Duration : 96 hours
B.Requirements
Appearance : Looseness between the parts, chipping, breakage or other abnormality shall not occur.
Contact resistance of inner contact initial 20 milli-ohm MAX. after testing 25milli-ohm MAX.
Contact resistance of ground contact initial 10 milli-ohm MAX. after testing 15milli-ohm MAX.
Insulation resistance : initial 500 mega-ohm MIN. after testing 100 mega-ohm MIN.
A.試験法：嵌合状態のコネクタを、下記の雰囲気に放置する。MIL-STD-202 試験法 103 条件 B に準拠。
温度：313±2K（40±2℃）
湿度：90～95%RH
時間：96時間
B.必要条件 外観 ： 部品のゆるみ、欠け、割れ、その他外観上の異常の無いこと。
中心導体接触抵抗 ： 初期 20mΩ 以下，試験後 25mΩ 以下
外部導体接触抵抗 ： 初期 10mΩ 以下，試験後 15mΩ 以下
絶縁抵抗 ： 初期 500MΩ 以上 試験後 100MΩ 以上

(3) Salt water spray / 塩水噴霧
A. Testing : Apply the following environment to the mating connector in accordance with MIL-STD-202, Method 101, Condition B.
Temperature : 308±2 K (35±2℃)
Salt water density by weight : 5±1%
Duration : 48 hours
B.Requirements : Appearance no abnormality adversely affecting the performance shall occur.

A.試験法：嵌合状態のコネクタを、下記の雰囲気に放置する。
温度 ：308±2K（35±2℃）
塩水濃度：5±1%（重量比）
時間 ：48時間
B.必要条件 ： 外観 著しい腐食の無い事。

DOCUMENT CLASSIFICATION	TITLE	No.
Product Specification 製品規格	MHF series micro coaxial connector	PRS-1176

(4) High temperature life / 高温

A. Testing : Apply the following environment to the mating connector.
Temperature : 363±2 K (90±2℃) Duration : 96 hours

B.Requirements

Appearance : Looseness between the parts, chipping, breakage or other abnormality shall not occur.
Contact resistance of inner contact initial 20 milli-ohm MAX. after testing 25milli-ohm MAX.
Contact resistance of ground contact initial 10 milli-ohm MAX. after testing 15milli-ohm MAX.

A.試験法:嵌合状態のコネクタを、下記の雰囲気に放置する。
温度:363±2K (90±2℃) 時間:96時間

B.必要条件 外観 : 部品のゆるみ、欠け、割れ、その他外観上の異常の無いこと。
中心導体接触抵抗 : 初期 20mΩ 以下, 試験後 25mΩ 以下
外部導体接触抵抗 : 初期 10mΩ 以下, 試験後 15mΩ 以下

6-2-4 Solder / 半田付け関連

(1) Solderability / 半田付け性

A. Testing : Dip the solder tine of the contact in the solder bath at 518±5(245±5℃) for 5±0.5 sec. After immersing the tine in the flux of RMA or R type for 5 to 10 seconds in accordance with MIL-STD-202, Method 208.

B.Requirements : More than 95% of the dipped surface shall be evenly wet.

A.試験法:コンタクトの半田付け部を518±5K(245±5℃)の半田漕内に5±0.5秒浸す。フラックスは、RMA又はR型を使用し5～10秒間浸すものとする。MIL-STD-202, 試験法208に準拠。

B.必要条件:浸した面積の95%以上に半田がむらなく付着すること。

(2) Reflow soldering heat resistance / 半田耐熱性

A. Testing : Put on the receptacle connector to PCB , apply the heat 2 cycles as shown in Fig. 4

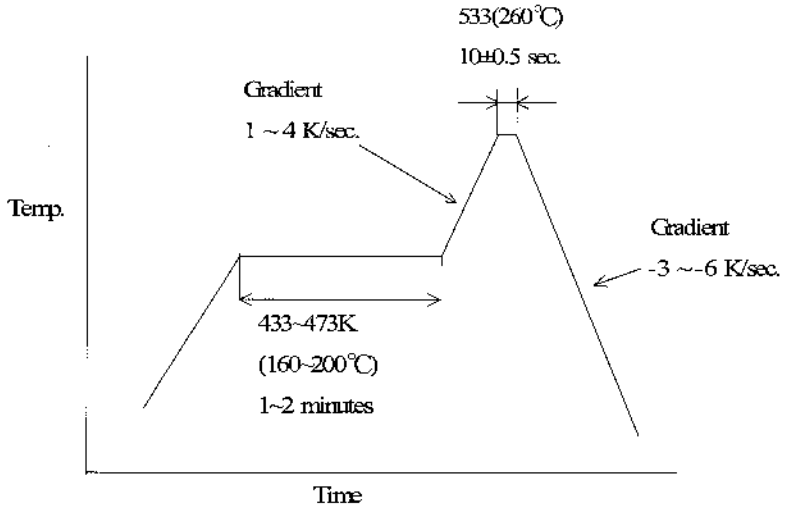

Fig.4

B.Requirements : Appearance no abnormality adversely affecting the performance shall occur.

A.試験法:基板にリセプタクルコネクタを置き、Fig. 4の条件で2回リフローを行う。

B.必要条件:機能を損なう変形及び欠陥の無い事。

DOCUMENT CLASSIFICATION	TITLE	No.
Product Specification 製品規格	MHF series micro coaxial connector	PRS-1176

6-2-5 試験順序と試料数 / Test Sequence and Sample Quantity

Test Item 試験項目		Group / グループ													
		A	B	C	D	E	F	G	H	I	L	M	N	O	P
(1)	Contact Resistance 接触抵抗					1 3	1 3	1 3	1 3	1 4	1 4		1 3		
(2)	Insulation resistance 絶縁抵抗									2 5	2 5				
(3)	Dielectric withstanding voltage 耐電圧	1													
(4)	VSWR		1												
(5)	Crimp strength 引張強度			1											
(6)	Unmating force 抜去力				1										
(7)	Durability 耐久性					2									
(8)	Contact resistance with force on the cable ケーブルに荷重を加えた後の接触抵抗						2								
(9)	Vibration 振動							2							
(10)	Shock 衝撃								2						
(11)	Thermal shock 温度サイクル									3					
(12)	Humidity 湿度										3				
(13)	Salt water spray 塩水噴霧											1			
(14)	High temperature life 高温												2		
(15)	Solderability 半田付け性													1	
(16)	Reflow soldering heat resistance 半田耐熱性														1
Sample QTY pcs. 試料数	Plug プラグ	10	5	10	10	10	10	10	10	10	10	10	10	----	----
	Receptacle リセプタクル	10	5	----	10	10	10	10	10	10	10	10	10	10	10
Test Board pcs. 基板数		10	5	----	10	10	10	10	10	10	10	10	10	----	10

PART NO.
20278-•••R-••

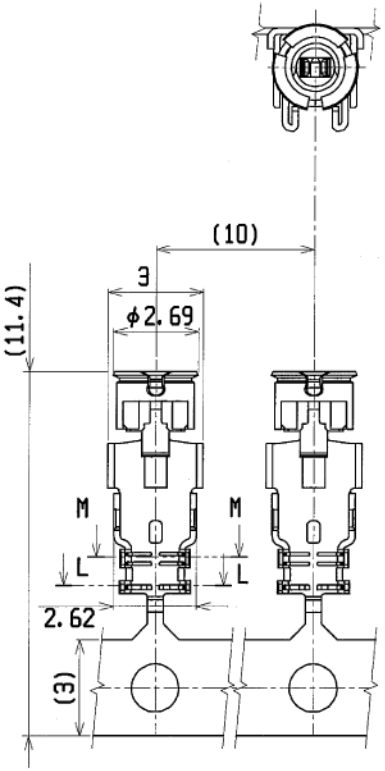

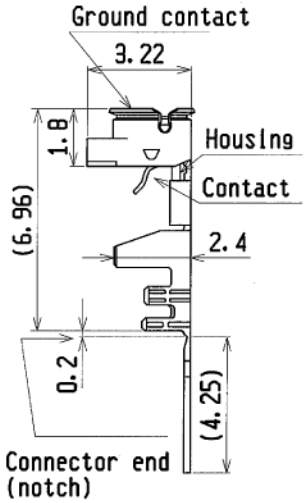

Part No. 20278-101R-08
20278-102R-08
20278-101R-13
20278-102R-13
20278-101R-32
20278-102R-32
For hand tool
(with notch)

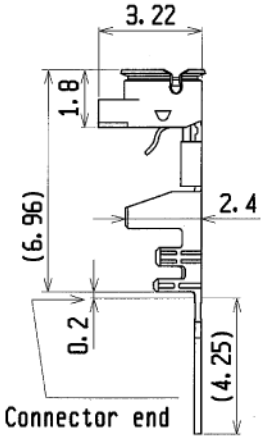

Part No. 20278-111R-08
20278-112R-08
20278-111R-13
20278-112R-13
20278-111R-32
20278-112R-32
For semi auto
termination machine
(without notch)

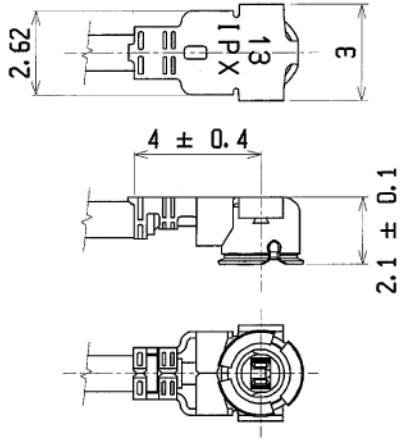

Cable Ass'y

Plug
P/N 20278-1••R-08
P/N 20278-1••R-13
P/N 20278-1••R-32

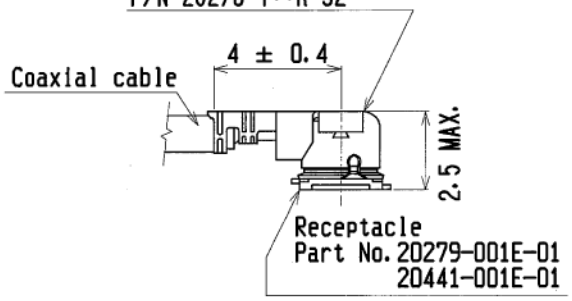

MATING

GENERAL TOLERANCE	
6 MAX.	±0.2
6 OVER MAX. 30	±0.3
30 OVER MAX. 120	±0.5
ANGLE	±2°

REV	ECN	BY	DATE	APP
19C	Z08056	K.O	Feb/04/'08	EK
18C	207346	K.O	Jul/10/'08	E.K
17C	205233	K.O	May/18/'05	T.H
16C	205024	K.O	Jan/20/'05	T.H
15C	204398	K.O	Nov/12/'04	T.H

REV. RECORD
SERIES No. 2814

DESIGN'D BY	K.Ohbayashi	DATE JUN/13/01
CHK'D BY		DATE
APP'D BY	K.Katabuchi	DATE JUN/13/01

CUSTOMER COPY

PROJECTION

I-PEX Interconnect and Packaging Electronics TOKYO, JAPAN

TITLE
MHF series micro coaxial connector plug vertical (ground contact : gold plating)

General

SCALE	UNIT	DWG. No.	SHEET	REV.
6/1	mm	20278	1/4	19C

FORM REV. 4

WAS T

To I-PEX Co.,Ltd

MATERIAL SAFETY DATA SHEET

MSDS FILE No. (KURAMI WORKS) : 05−1225 (based on Form OSHA-174)

IDENTITY (AS Used on Label and List)

Product Class : Phosphor Bronze Strip
Trade Name : JIS H3130 C5210R (Equivalent to ASTM B103 C52100)
CAS No. : Copper: 7440-50-8, Tin: 7440-31-5, Phosphor: 7723-14-0

Chemical Composition

	Content(wt-%)	CAS No.
Tin(Sn)	7.0~9.0	7440−31−5
Phosphor(P)	0.03~0.35	7723−14−0
Copper(Cu)	Balance	7440−50−8
Sn+P+Cu	99.7≦	−

Section I

Manufacturer's Name
NIKKO METAL MANUFACTURING CO., LTD.
KURAMI WORKS

Address
3 Kurami Samukawa-cho
Kouza-gun Kanagawa prefecture
253-0101 JAPAN

Telephone Number for Information (Quality Assurance)
+81-467-75-7285

Facsimile Number for Information (Quality Assurance)
+81-467-74-6971

Date Prepared
May 24th, 2005

Signature of Person in Charge
Chihiro Izumi
IZUMI, Chihiro
Senior Technical Supervisor, Quality Assurance

Signature of Person Responsible
Hiroaki Watanabe
WATANABE, Hiroaki
Manager, Quality Assurance Section

Section II Hazardous Ingredients / Identity Information

Hazardous Components (Specific Chemical Identity : Names OSHA Pel ACGIH TLV

Nothing for ordinary service condition

Section III Physical / Chemical Characteristics

Boiling Point	2630 ℃ for Copper 2275 ℃ for Tin	Specific Gravity (H20 = 1)	8.80
Vapor Pressure (mmHg)	N/A	Melting Point	1025 deg. centi. for C5210 Phosphor Bronze
Vapor Density (Air = 1)	N/A	Evaporation Rate (Butyl Acetate = 1)	N/A

Solubility in Water
N/A

Appearance and Odor
Brown − Red (solid) : Odor − None

Section IV Fire and Explosion Hazard Data

Flash Point (Method Used)	Flammable Limits	LEL	UEL
N/A	N/A	N/A	N/A

Extinguishing Media
N/A (stable , nonflammable substance)

Special Fire Fighting Procedures
Not specified

Unusual Fire and Explosion Hazards
Metal products do not present fire or explosion hazards under normal conditions.

Section V Reactivity Data

Stability	Unstable		Conditions to Avoid
	Stable	×	

Incompatibility (Materials to Avoid)

Nothing

Hazardous Decomposition or Byproducts

Nothing

Hazardous Polymerization	May Occur		Conditions to Avoid
	Will Not Occur	×	

Section VI Health Hazard Data

Route(s) of Entry : Inhalation ? N/A Skin ? N/A Ingestion ? N/A

Health Hazardous (Acute and Chronic)

N/A

Carcinogenicitry : NTP ? N/A IARC Monographs ? N/A OSHA Regulated ? N/A

Signs and Symptoms of Exposure

N/A

Medical Conditions
Generally Aggravated by Exposure N/A

Emergency and First Aid Procedures

N/A

Section VII Precautions for State Handling and Use

Steps to Be Taken in Case Material Is Released or Spilled

N/A

Waste Disposal Method

Collect scrap for remelting.

Precautions to Be Taken in Handling and storing

For Handling

- Put safety gloves on to protect your hands from edges of coils which might cut your hands.
- Wear safety glasses when metal powders or chips are expected to be generated in the work.
- Put safety shoes on when handling heavy coils.

For Storing

- The environment of stocking area should be free from acid, alkali, chloride, sulfide and other corrosive chemicals to prevent from rusting or corrosion.

Other Precautions

No special requirements

Section VIII Control Measures

Respiratory Protection (Specify Type)

Wearing a mask be recommended in the work such as abrasion and buffing which generates metal powders or chips.

Ventilation	Local Exhaust	Special
	None	None
	Mechanical (General)	Other
	None	None

Protective Gloves

Put safety gloves on to protect your hands from edges of coils which might cut your hands.

Eye Protection

Wear safety glasses when metal powder is expected to be generated in the work.

Other Protective Clothing or Equipment

Put safety shoes on when handling heavy coils.

Work / Hygienic Practices

None

Influence to environments

Fish on toxicity : TLm 48 hr. on $CuSO_4$
Salmogairdeneri : 0.038 ~ 0.8 ppm
Oryzias Latipes : 2.1 ~ 24ppm

2005 . 2 .27

Material Safety Data Sheet

1. Manufacturer

・Company HARADA Metal Industry Co., Ltd.

・Address 10−18 Sasamekitamati, Toda, Saitama 335−0033, Japan

TEL 048−422−1588

FAX 048−449−6303

・Counter The domestic business department business primary and second section

TEL 048−441−5115

FAX 048−444−9104

The domestic business department OSAKA service office

TEL 06−531−8094

FAX 06−531−8096

The domestic business department NAGOYA service office

TEL 052−821−9778

FAX 052−822−7500

The overseas business department export section

TEL 048−441−5115

FAX 048−444−9104

・Urgent place to contact

The quality assurance department

TEL 048−422−1588

FAX 048−449−6303

2. Products

・Phosphor bronze plates and strips for springs

・Phosphor bronze plates and strips

3. Specification of the material

- The division of mixture or single product : Single product
- The chemical name : Copper alloy
- Chemical composition and content rate(wt.%)

Element	Percent					CAS No.
	C5210	C5212	C5191	C5102	C5111	
Copper	rem.	rem.	rem.	rem.	rem.	7440-50-8
Tin	7.0~9.0	7.0~9.0	5.5~7.0	4.5~5.5	3.5~4.5	7440-31-5
Phosphorus	0.03~0.35	0.03~0.35	0.03~0.35	0.03~0.35	0.03~0.35	7723-14-0
Lead	0.05 max	0.05 max	0.05 max	0.05 max	0.05 max	7439-92-1
Iron	0.1 max	0.1 max	0.1 max	0.1 max	0.1 max	7439-89-6
Zinc	0.2 max	0.2 max	0.2 max	0.2 max	0.2 max	7440-66-6

4. Classification of harmfulness

- The name of classification : Not classified into the dangerous harmfulness material.
- The danger : No knowledge
- The harmfulness : No knowledge
- The effect for the environment : No knowledge

5. First aid

- Eyes : Flush the water. Consult the doctor, when the simulation of the eye continues.
- Skin : Flush the water.
- Inhalation : Consult the doctor, when it was large inhaled.

6. The treatment in the fire

- Nonflammable.

7. Leakage

- Not applied (because of solid)

8. Attention in handling and storage

- Stored at the ordinary—temperature and usual humidity.
- Prohibition of the rapid temperature and humidity change.

9. Treatment on the exposure prevention

- Standard control concentration : Not regulated.
- Allowable temperature : Not regulated.
- Facility countermeasure : The whole ventilation is desirable.
- Protector : For lung ,the wear of protection mask is desirable for the power handling.
  For hand ,the wear of protective glove is desirable.
  For eyes ,the wear of safety goggles is desirable for the power handling.
  For body , the wear of protective clothing is desirable.

10. Physical and chemical characteristic

- Appearance and smell : The solid with the metallic luster. Odoless.
- Boiling point : The indistinctness.
- Solubility : Dissolves in the inorganic acid.

	C5210	C5212	C5191	C5102	C5111
Specific gravity	8.82	8.82	8.85	8.88	8.90
Melting point	1020℃	1020℃	1045℃	1050℃	1060℃

11. Information for danger

- Fire point : The indistinctness.
- Stability : Show the stability at room temperature and in the air.
- The situation to be avoided : —

12. Information for harmfulness

- The powder stimulates eyes , skin and bronchi.
- Produce the ulcer and the hepatic disorder rarely.

13. Information for environment

- No knowledge.

14. Attention for scrapping

- Possible to deal with ,as an industrial waste.

15. Attention for transportation

- No damage transportation is desirable.

16. Applying act

- —

File E308587
Project 06CA50326

November 30, 2006

REPORT

On

COMPONENT - APPLIANCE WIRING MATERIAL

Weiyang Technology Co., Ltd.
Taipei Hsien 236, Taiwan

Copyright © 2006 Underwriters Laboratories Inc.

Underwriters Laboratories Inc. authorizes the above-named company to reproduce this Report provided it is reproduced in its entirety.

DESCRIPTION

PRODUCT COVERED:

Appliance Wiring Material, Styles 1330, 1331, 1332, 1333, 1354, 1745, 1835, 1979, 10064, 10231, 20079, 20145, 20262, 20308, 20476 and 21071.

TEST RECORD NO. 1

SAMPLES:

Samples of Appliance Wiring Material as indicated below and constructed as described herein, were submitted by the manufacturer for examination and test.

Material	Construction	Temp, °C	Voltage, V	Thickness	
				Average, mils	Minimum at any point, mils
FEP	Non-Integral Jacket Cable	200	600	9.8	7.4
FEP	Insulated Single	200	600	6.3	6.0
FEP	Insulated Single	200	30	2.0	1.7

The above samples were tested to be representative of Styles 1330, 1331, 1332, 1333, 1354, 1745, 1835, 1979, 10064, 10231, 20079, 20145, 20262, 20308, 20476 and 21071.

GENERAL:

Test results relate only to the items tested.

The following tests were conducted.

For FEP Non-Integral Jacket Cable -

Test	Section
Thickness, Insulation	13.3
Physical Properties	14
Flexibility Test After Air Oven Conditioning	20
Heat Shock Test	21
Cold Bend Test	22
Cable Flame Test	40
VW-1 Flame Test	41
FT-2 Flame Test	43

The test methods and results of the above tests have been reviewed and found in accordance with the requirements in Underwriters Laboratories Inc. Standard UL 758, Second Edition, for Appliance Wiring Material, containing revisions through and including October 6, 2006.

UL 758 Standard Test / Section	Represented UL 758 Standard Test / Section
FT-2 Flame Test / 43	Horizontal Flame Test for Internal Wiring / 39

The above test conducted in accordance with Standard UL 758 was considered representative of another test required by Standard UL 758.

FEP Insulated Single (30 V) -

Test	Section
Thickness, Insulation	7.3
Physical Properties, Unaged and Air Oven Aged	14
Conductor Corrosion Test	18
Flexibility Test After Air Oven Conditioning	20
Heat Shock Test	21
Cold Bend Test	22
Crush Resistance Test	27
Dielectric Test, Method I	28
Dielectric Test, Method II	29
Dielectric Test, Method III	30
VW-1 Flame Test	41
FT-2 Flame Test	43

The test methods and results of the above tests have been reviewed and found in accordance with the requirements in Underwriters Laboratories Inc. Standard UL 758, Second Edition, for Appliance Wiring Material, containing revisions through and including October 6, 2006.

UL 758 Standard Test / Section	Represented UL 758 Standard Test / Section
FT-2 Flame Test / 43	Horizontal Flame Test for Internal Wiring / 39

The above test conducted in accordance with Standard UL 758 was considered representative of another test required by Standard UL 758.

FEP Insulated Single (600 V)

Test	Section
Thickness, Insulation	7.3
Physical Properties, Unaged and Air Oven Aged	14
Cold Bend Test	22
Crush Resistance Test	27
Dielectric Test, Method I	28
Dielectric Test, Method II	29
Dielectric Test, Method III	30

The test methods and results of the above tests have been reviewed and found in accordance with the requirements in Underwriters Laboratories Inc. Standard UL 758, Second Edition, for Appliance Wiring Material, containing revisions through and including October 6, 2006.

Test Record Summary:

The results of this investigation, including construction review and testing, indicate that the products evaluated comply with the applicable requirements in Underwriters Laboratories Inc. Standard UL 758, Second Edition, for Appliance Wiring Material, containing revisions through and including October 6, 2006, therefore, such products are judged eligible to bear UL's Mark as described on the Conclusion Page of this Report.

CONCLUSION

Samples of the components covered by this Report have been found to comply with the requirements covering the category and the components are judged to be eligible for Component Recognition and Follow-Up Service. Under the service, the manufacturer is authorized to use the Recognized Marking described in the Follow-Up Service Procedure on such components which comply with said Procedure and any other applicable requirements of Underwriters Laboratories Inc. Only those components which properly bear the Recognized Marking are considered as Recognized Components by Underwriters Laboratories Inc.

Report by:
LAURA CHANG
Engineer

Reviewed by:
RAYMOND LIANG
Associate Project Engineer

TINA CHEN
Conformity Assessment Specialist

Any information and documentation provided to you involving UL Mark services are provided on behalf of Underwriters Laboratories Inc.

ZPMV2.E206991
Wiring, Printed - Component

Enhanced searching capability for this category can be found in UL's iQ Family of Databases (i .ul.com).

Page Bottom

Wiring, Printed - Component

See General Information for Wiring, Printed - Component

NEW-HEART TECHNOLOGY CO LTD E206991
11 MIN U RD
DAYUAN TOWNSHIP
TAOYUAN HSIEN, 337 TAIWAN

	Cond Width				Max			Max			
		Min	Cond		Area	Solder		Oper		Meets	C
	Min	Edge	Thk	SS/	Diam	Limits		Temp	Flame	UL796	T
Type	mm(in)	mm(in)	mic(mil)	DS	mm(in)	C	sec	C	Class	DSR	I
Multilayer printed wiring boards.											
2M	0.10 (0.004)	0.21 (0.008)	17 (0.67) Int:68	DS	76.2 (3.0)	260	10	105	-0	All	-
3M	0.14 (0.006)	0.24 (0.009)	17 (0.67) Int:32	DS	76.2 (3.0)	260	20	130	-0	All	-
3M1	0.14 (0.006)	0.24 (0.009)	17 (0.67) Int:34	DS	50.8 (2.0)	260	20	130	-0	All	
4M	0.10 (0.004)	0.21 (0.008)	17 (0.67) Int:34	DS	76.2 (3.0)	260	20	140	-0	All	-
Single layer printed wiring boards.											
1S	0.10 (0.004)	0.21 (0.008)	17 (0.67)	DS	76.2 (3.0)	260	10	130	-0	All	-
1S-1	0.10 (0.004)	0.21 (0.008)	17 (0.67)	DS	76.2 (3.0)	260	10	105	-0	All	-

- CTI Rating is marked on individual board.

Marking: Company name or trademark NH and type designation. May be followed by a suffix to denote factory identification.
Last Updated on 2009-06-20

Questions? Notice of Disclaimer Page Top

Copyright ?2009 Underwriters Laboratories Inc.

The appearance of a company's name or product in this database does not in itself assure that products so identified have been manufactured under UL's Follow-Up Service. Only those products bearing the UL Mark should be considered to be Listed and covered under UL's Follow-Up Service. Always look for the Mark on the product.

UL permits the reproduction of the material contained in the Online Certification Directory subject to the following conditions: 1. The Guide Information, Designs and/or Listings (files) must be presented in their entirety and in a non-misleading manner, without any manipulation of the data (or drawings). 2. The statement "Reprinted from the Online Certifications Directory with permission from Underwriters Laboratories Inc." must appear adjacent to the extracted material. In addition, the reprinted material must include a copyright notice in the following format: "Copyright © 2009 Underwriters Laboratories Inc. "

An independent organization working for a safer world with integrity, precision and knowledge.

ZPMV2.E324115
Wiring, Printed - Component

Enhanced searching capability for this category can be found in UL's iQ Family of Databases (iq.ul.com).

Page Bottom

Wiring, Printed - Component

See General Information for Wiring, Printed - Component

SYU YUAN ELECTRONIC CO LTD E324115
261 SEC 2 GUANGMING RD
LUZHU SHIANG
TAOYUAN HSIEN, 338 TAIWAN

	Cond Width				Max			Max			
		Min	Cond		Area	Solder		Oper		Meets	C
	Min	Edge	Thk	SS/	Diam	Limits		Temp	Flame	UL796	T
Type	mm(in)	mm(in)	mic(mil)	DS	mm(in)	C	sec	C	Class	DSR	I
Multilayer printed wiring boards.											
M	0.11 (0.004)	0.33 (0.013)	17 (0.67) Int:68	DS	25.4 (1.0)	288	10	130	V-0	All	-
M1	0.11 (0.004)	0.12 (0.005)	17 (0.67) Int:68	DS	25.4 (1.0)	288	10	140	V-0	All	-
Single layer printed wiring boards.											
D1	0.11 (0.004)	0.12 (0.005)	17 (0.67)	DS	25.4 (1.0)	288	10	140	V-0	All	-
Single layer printed wiring boards, flammability only Recognition.											
D	0.11 (0.004)	0.33 (0.013)	17 (0.67)	DS	25.4 (1.0)	288	10	130	V-0	All	-

Marking: Company name or trademark and type designation. May be followed by a suffix to denote factory identification.

Last Updated on 2008-09-17

Questions? Notice of Disclaimer Page Top

Copyright ?2009 Underwriters Laboratories Inc.®

The appearance of a company's name or product in this database does not in itself assure that products so identified have been manufactured under UL's Follow-Up Service. Only those products bearing the UL Mark should be considered to be Listed and covered under UL's Follow-Up Service. Always look for the Mark on the product.

UL permits the reproduction of the material contained in the Online Certification Directory subject to the following conditions: 1. The Guide Information, Designs and/or Listings (files) must be presented in their entirety and in a non-misleading manner, without any manipulation of the data (or drawings). 2. The statement "Reprinted from the Online Certifications Directory with permission from Underwriters Laboratories Inc." must appear adjacent to the extracted material. In addition, the reprinted material must include a copyright notice in the following format: "Copyright © 2009 Underwriters Laboratories Inc.®"

PFW2.E352498
Wiring Harnesses - Component

Page Bottom

Wiring Harnesses - Component

See General Information for Wiring Harnesses - Component

SAN JOSE TECHNOLOGY INC
11FL NO 2 SEC 4
JHONGYANG RD
TUCHENG
NEW TAIPEI, 236 TAIWAN

E352498

Last Updated on 2012-02-17

© 2015 UL LLC

The appearance of a company's name or product in this database does not in itself assure that products so identified have been manufactured under UL's Follow-Up Service. Only those products bearing the UL Mark should be considered to be Certified and covered under UL's Follow-Up Service. Always look for the Mark on the product.

UL permits the reproduction of the material contained in the Online Certification Directory subject to the following conditions: 1. The Guide Information, Assemblies, Constructions, Designs, Systems, and/or Certifications (files) must be presented in their entirety and in a non-misleading manner, without any manipulation of the data (or drawings). 2. The statement "Reprinted from the Online Certifications Directory with permission from UL" must appear adjacent to the extracted material. In addition, the reprinted material must include a copyright notice in the following format: "© 2015 UL LLC".

SANAV 新禾航電股份有限公司
SAN JOSE TECHNOLOGY, INC.
11F., No.2, Sec. 4, Jhongyang Rd., Tucheng Dist.,
New Taipei City 236, Taiwan (R.O.C.)
Tel: +886-2-2269-4456 Fax: +886-2-2269-4451
E-mail: sanav@sanav.com htttp://www.savav.com

To whom it may concern

Nov. 11, 2015

Certificate of RoHS Compliance

I do declare that the following product:

Wlan 2.4/5G Antenna GEPH-056 and GEPH-057

Produced by San Jose Technology, Inc. conforms to the safety, and reliability norms of the following regulations:

RoHS Directive (2011/65/EU): The Restriction of Hazardous Substances in Electrical and Electronic Equipment Directive, passed into law by the European Union (E.U.)

We agree to take the whole responsibility in this respect.

Signed by: Terry Lu

Terry Lu
QA Deputy Manager