COMMSCOPE®

OneCell®

Hardware Installation Guide

Release 4.5

Document Number: **M0303A2**

Document Revision: **4.5.01**

Date: **September 2020**

DRAFT

Copyright © 2020 CommScope, All rights reserved.

THIS DOCUMENT HAS BEEN DEVELOPED BY COMMSCOPE, AND IS INTENDED FOR THE USE OF ITS CUSTOMERS AND CUSTOMER SUPPORT PERSONNEL.

THE SPECIFICATIONS AND INFORMATION REGARDING THE PRODUCTS IN THIS MANUAL ARE SUBJECT TO CHANGE WITHOUT NOTICE. ALL STATEMENTS, INFORMATION, AND RECOMMENDATIONS IN THIS MANUAL ARE BELIEVED TO BE ACCURATE BUT ARE PRESENTED WITHOUT WARRANTY OF ANY KIND, EXPRESS OR IMPLIED. USERS MUST TAKE FULL RESPONSIBILITY FOR THEIR APPLICATION OF ANY PRODUCTS.

THE SOFTWARE LICENSE AND LIMITED WARRANTY FOR THE ACCOMPANYING PRODUCT ARE SET FORTH IN THE INFORMATION PACKET THAT SHIPPED WITH THE PRODUCT AND ARE INCORPORATED HEREIN BY REFERENCE. IF YOU ARE UNABLE TO LOCATE THE SOFTWARE LICENSE OR LIMITED WARRANTY, CONTACT YOUR COMMSCOPE SALES REPRESENTATIVE FOR A COPY.

DRAFT

Contents

Document revision history

About this document

Audience xiii
Purpose xiii
What you need to know xiii
Customer documentation xiii
Conventions xiv
Notes, cautions, and warnings xvi

PART 1 OVERVIEW AND PREPARATION

Chapter 1
CommScope OneCell® overview

Overview 1-2
CommScope OneCell system 1-2
OneCell hardware components 1-3
Baseband Controller physical ports 1-3

Chapter 2
Preparing to install the OneCell system

Overview 2-2
Before installing the OneCell components 2-2
Commissioning the OneCell network 2-2

PART 2 ONECELL COMPONENT INSTALLATION

Chapter 3
Baseband Controller installation

Preparing for Baseband Controller installation 3-2
Installing the Baseband Controller into a rack 3-2

Chapter 4
RP5100i installation

RP5100i installation overview 4-2
Ceiling mount 4-3

DRAFT

Mounting the Radio Point on the ceiling tile 4-5
Mounting the Radio Point above the ceiling tile 4-15
Flown mount 4-22
Flown mount installation 4-24
Pole mount 4-31
Pole mount installation 4-31

Chapter 5
RP5100r installation

Rugged Radio Point installation overview 5-2
Pole mount installation 5-4
Vertical pole mount 5-4
Wall mount installation 5-10

Chapter 6
RP2000 Installation

Indoor Radio Point (RP2000) installation overview 6-2
Ceiling mount 6-3
Mounting the Radio Point on the ceiling tile 6-5
Mounting the Radio Point above the ceiling tile 6-13
Flown mount 6-17
Flown mount installation 6-18
Pole mount 6-23
Pole mount installation 6-23

Chapter 7
RP2100 Installation

Rugged Radio Point (RP2100) installation overview 7-2
Pole mount installation 7-4
Vertical pole mount 7-4
Horizontal pole mount 7-10
Wall mount installation 7-17

PART 3 APPENDICES

Appendix A
Safety

Radiation Exposure Statement A-2
FCC Part 15 ..... A-2

DRAFT

EN55032 ..... A-2
Human exposure limits for OneCell deployments A-2
Reference documents A-4

Appendix B
Installation troubleshooting

Baseband Controller LED patterns B-2
Radio Point LED patterns B-4
RP5100i LED patterns B-4
RP5100r LED patterns B-6
RP2000 series LED patterns B-7

Appendix C
Specifications

Environmental and physical specifications C-2
SPF/SPF+ specifications C-3

Appendix D
Field Replaceable Units

FRU overview D-2
Replacing Baseband Controller modules D-2
Prerequisites D-2
Off-site activities D-3
On-site activities D-7
Post-Install Verification D-11
Replacing Radio Points prerequisites and on-site activities D-13
Prerequisites D-13
On-site activities D-14
Replacing RP5100 series Radio Points D-16
Replacing a ceiling RP5100i (above tile) D-17
Replacing a flown mounted RP5100i D-32
Replacing a pole mounted RP5100i D-42
Replacing RP5100i RF modules D-47
Replacing RP2000 series Radio Points D-52
Replacing a ceiling Indoor RP (above tile) D-52
Replacing a flown mounted Indoor RP D-62
Replacing a pole mounted Indoor RP D-66
Replacing a vertical pole mounted Rugged RP D-69
Replacing a horizontal pole mounted Rugged RP D-76
Replacing a wall mounted Rugged RP D-81

DRAFT

RP post-replacement verification D-85

Appendix E
Cable installation and power separation guidelines

Overview E-2
Cable handling E-2
Cable termination E-3
Cable splicing E-4
Cable termination E-5
Cable grounding E-10
Lightning protection E-12
Important guidelines E-12
Indoor box E-12
Outdoor protection E-13
Ceiling connector E-15
Patch panel E-17
Power separation guidelines E-17

DRAFT

DRAFT

List of figures

Figure 1-1 OneCell solution 1-3
Figure 1-2 Baseband Controller ports 1-4
Figure 4-1 CommScope ceiling mount kit contents 4-3
Figure 4-2 Drop rail, system integrator-provided 4-4
Figure 4-3 CommScope flown mount kit contents 4-23
Figure 4-4 Mounting bracket kit contents 4-31
Figure 5-1 Hardware provided by CommScope 5-2
Figure 5-2 Hardware provided by the systems integrator 5-3
Figure 5-3 RJ45, IP67 connector assembly 5-4
Figure 6-1 CommScope ceiling mount kit contents 6-3
Figure 6-2 Drop rail, system integrator-provided 6-4
Figure 6-3 CommScope supplied kit contents 6-17
Figure 6-4 Mounting bracket kit contents 6-23
Figure E-1 Unreel cable E-2
Figure E-2 Cable with sock attached using tie wrap E-3
Figure E-3 RJ45, IP67 connector E-3
Figure E-4 Assembling the connector on the RP end E-4
Figure E-5 CAT6-A lightning protector E-13
Figure E-6 Remote equipment protection for outdoor devices E-14
Figure E-7 Protector box mounted to pole E-15

DRAFT

List of tables

Table 1 Customer documentation xiv
Table 2 Conventions xiv
Table 1-1 Baseband Controller physical port assignments 1-4
Table A-1 RF exposure for OneCell at maximum power internal antennas for RP5000 series A-3
Table A-2 RF exposure for OneCell at maximum power internal antennas for RP2000 series A-4
Table C-1 Environmental and Physical specifications C-2
Table E-1 CAT-6A protection equipment parts list E-13

DRAFT

DRAFT

Document revision history

The following section lists documentation changes in *OneCell® Installation Guide, v4.5* (M0303A2).

Revision 4.5.01 (September 14, 2020)

- Initial document release
- Added Band 5 (RPM-A5A11-B05) and Band 30 (RPM-A5A11-B30) RF exposure data to Table A-1 on page A-3

DRAFT

DRAFT

About this document

This document provides the procedures for installing and configuring the Baseband Controller and Radio Points.

Audience

This document is written for computer hardware installers and administrators, network architects and business planners who are responsible for the planning and design of the CommScope OneCell deployment environment.

Purpose

This guide provides the information necessary for installing the OneCell hardware in the operator's network.

What you need to know

The reader should have a basic understanding of:

- Data networks
- LTE technology
- General telecommunications practices

Customer documentation

The following table lists available documents in the OneCell documentation suite.

DRAFT

Table 1. Customer documentation

Title	Contents
OneCell® Feature Guide, v4.5 (M0303A0)	Contains a description of anchor features for the current release, and a system overview, including CommScope provided components and required components from other vendors.
OneCell® Network Planning Guide, v4.5 (M0303A1)	Describes main components of the OneCell system, high-level view of hardware components, how do you engineer an in-building system, how do you determine Radio Points locations, and how to design in-building systems. Contains best practices for deployment, including when to use clustering, and how to manage capacity.
OneCell® Installation Guide, v4.5 (M0303A2)	Includes detailed installation instructions for Baseband Controller and Radio Points hardware.
OM and KPI Reference for OneCell® Devices, v4.5 (M0303A3)	Describes the operational measurements and key performance indicators for OneCell devices.
OneCell® Troubleshooting, v4.5 (M0303A4)	Covers common troubleshooting scenarios in deployed devices and troubleshooting methods.
OneCell® Administration, v4.5 (M0303A5)	Describes how to operate, maintain and manage OneCell devices using the Baseband Controller's Web UI.
OneCell® Device Alarm Reference (M0301A7)	Includes OneCell device alarm information.

DRAFT

Conventions

This guide uses the following text conventions, as applicable.

Table 2. Conventions

Convention	Description
Syntax symbols	
< >	Enclose a required parameter or set of parameters. For example: **>band-class <class>** ***<class>*** is a required parameter.
[ ]	Enclose an optional parameter or set of parameters. For example: **>activate image *<version>* [reboot]** **[reboot]** is an optional parameter.
|	Separates items on a list of parameters, only one of which can be used. For example: **>channel-included <yes|no>** A valid command is: **>channel-included yes**
Font usage	
Bold input font	Indicates text that must be entered exactly as shown. For example: Enter **ping 192.23.10.12**.
Italic input font	Indicates a variable parameter for which you must provide an actual value. For example: **>authentication key *<aukey>*** ***<aukey>*** is a variable parameter. A valid command is: **>authentication key 9782503000**
Plain output font	Indicates system output in a command line or system-generated file. For example: IP address 192.23.10.12 is alive.
Italic output font	Indicates a variable in system output in a command line or system-generated file. For example: Installation of release *<release>* is complete.

DRAFT

Table 2. Conventions

Convention	Description
Plain italic font	Indicates file names, directory paths, book titles, chapter titles, and user accounts.
Bold font	Indicates text that appears on screen exactly as shown, for example, names of screens, names of buttons, items on menus, and items on pull down lists.
blue text	Indicates a hypertext link.
Other conventions	
>	Indicates graphical user interface (GUI) menu path. For example: Select **Edit > Add Network** to open the Add Network screen.

Notes, cautions, and warnings

NOTE

Notes provide additional information about the subject text.

CAUTION

Cautions indicate that procedures, if performed incorrectly, can cause equipment damage or data loss.

WARNING

Warnings indicate that procedures, if performed incorrectly, can harm you.

DRAFT

Part I: Overview and preparation

Chapter 1 **CommScope OneCell® overview**

Chapter 2 **Preparing to install the OneCell system**

DRAFT

DRAFT

Chapter 1

CommScope OneCell® overview

This chapter contains a high level overview of the OneCell deployment and the OneCell components installed in the OneCell system.

Overview	1-2
CommScope OneCell system	1-2
OneCell hardware components	1-3

DRAFT

Overview

OneCell is a revolutionary wireless system that can deliver the ultimate in wireless performance.

- It eliminates cell borders and handovers
- It can cover a large area with consistent user experience without any significant interference
- It can take advantage of multiple distributed radio points to deliver a stronger signal on both the downlink and the uplink
- It can deliver greater capacity through distributed (multi-user and single-user) MIMO and Coordinated Multipoint (CoMP)
- It has the flexibility to neutralize macro interference in co-channel small cell deployments
- It can be used to deliver unprecedented levels of capacity to hot spot areas by deploying radio points with overlapping coverage and enabling multi- user MIMO

In addition to these important benefits in user experience and data capacity, OneCell provides superior economics and investment protection, ease of deployment, support for multi-operator deployments.

CommScope OneCell system

OneCell is an in-building, enterprise solution for LTE that provides an in-building consistent signal. It operates as a wireless network with a single cell, called a Baseband Controller, over distributed Radio Points. Network operators benefit from the OneCell because they reduce the load on their infrastructure.

DRAFT

Figure 1-1. OneCell solution

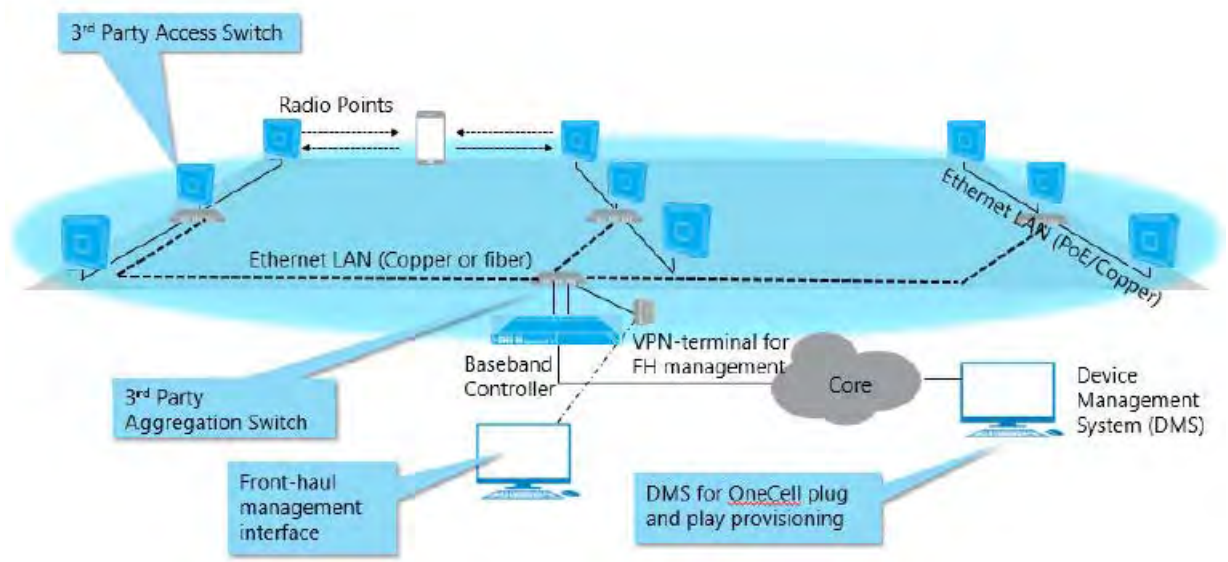

OneCell hardware components

The OneCell hardware consists of the following components:

- Baseband Controller
  - — Baseband Controller Chassis
  - — Baseband Controller Module
  - — Power/Fan Unit (PFU)

Baseband Controller physical ports

The following ports are on the front panel of the Baseband Controller Module. Table 1-1 shows the port assignments. In addition, there is a connector used for the GPS antenna cable.

NOTE

For more detailed BC port information, see *OneCell® Network Planning Guide, v4.5* (M0303A1).

DRAFT

Table 1-1. Baseband Controller physical port assignments

Port Assignment	Network	Port Speed	Media Type	Description
MGMT	Local Management	1 Gbps	RJ45	**External Interface** to access the WebGUI on the Baseband Controller.
0	Not used	1 Gbps	RJ45	Not used
1-6	IQ Data	1 Gbps	RJ45	**Fronthaul IQ Data Traffic** between the Baseband Controller and Radio Points via an Ethernet switch on copper (RJ45) port.
7	Boundary Clock	1 Gbps	Dual Media RJ45 or SFP	**Boundary Clock Input** of IEEE 1588 PTP Timing signal via dual media port.
8	IPsec	1 Gbps	Dual Media RJ45 or SFP	**Backhaul Traffic** (S1 and OAM Interfaces) via dual media port. VLAN tags are configurable in Dual IPsec mode to separate different traffic streams on the same port.
9	X2 and Redundancy	1 Gbps	Dual Media RJ45 or SFP	**Fronthaul Traffic** for X2 and Redundancy Cluster data via dual media port.
10	RP Management and Timing	1 Gbps	Dual Media RJ45 or SFP	**Fronthaul Traffic** for IEEE 1588 PTP timing and SOAP/XML control data via dual media port. Timing and OAM data traffic between Baseband Controller and Radio Points through an Ethernet switch(s)
11	IQ Data	10 Gbps	SFP+	**Fronthaul IQ Data Traffic** between the Baseband Controller and Radio Points via Ethernet switch on Fiber (SFP) port.
12	Not used	10 Gbps	SFP+	Not used

DRAFT

Figure 1-2. Baseband Controller ports

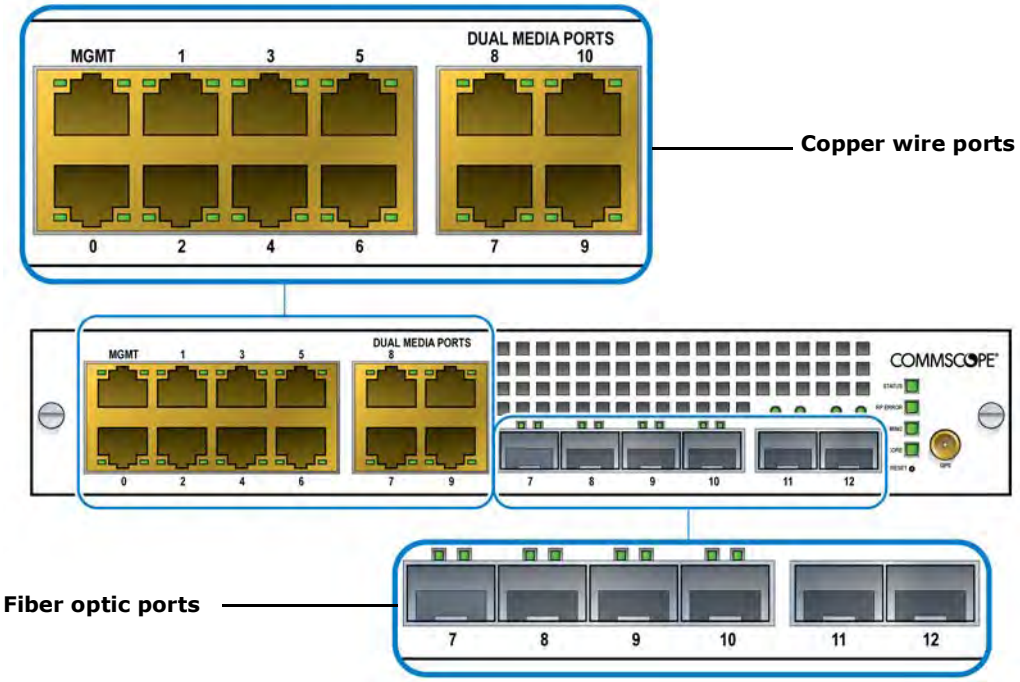

DRAFT

DRAFT

Chapter 2

Preparing to install the OneCell system

This section has the steps to complete before starting the OneCell installation.

Overview	2-2
Before installing the OneCell components	2-2

DRAFT

Overview

This document describes the OneCell installation and includes:

- Chapter 3, Baseband Controller installation
- Chapter 4, RP5100i installation
- Chapter 5, RP5100r installation
- Chapter 6, RP2000 Installation
- Chapter 7, RP2100 Installation

Before installing the OneCell components

Before installing the OneCell components, the system integrator must plan the network for the topology that will be deployed. See *OneCell Network Planning Guide* (913023).

CommScope recommends that cables and switches be in place before installing the OneCell components. See Appendix E, Cable installation and power separation guidelines for more information.

Commissioning the OneCell network

To bring your OneCell system up, you'll need to commission the system by configuring it. The commissioning procedures are dependent on the site installation. Contact your CommScope representative for your commissioning procedures.

DRAFT

Part II: OneCell component installation

Chapter 3 **Baseband Controller installation**

Chapter 4 **RP5100i installation**

Chapter 5 **RP5100r installation**

Chapter 6 **RP2000 Installation**

Chapter 7 **RP2100 Installation**

DRAFT

DRAFT

Chapter 3

Baseband Controller installation

This chapter contains the Baseband Controller installation procedures, including chassis installation into a rack, Baseband Controller Module and Power/Fan Unit installation into the Baseband Controller Chassis and the cables required for a basic installation.

Preparing for Baseband Controller installation	3-2
Installing the Baseband Controller into a rack	3-2

DRAFT

Preparing for Baseband Controller installation

Open the shipping box. It should have the components for one complete Baseband Controller Module:

- Baseband Controller Chassis – including four mounting screws
- Baseband Controller Module
- Power/Fan Unit (PFU)

The Baseband Controller is 1U high. Be sure there is enough room for the Baseband Controller in the rack.

NOTE

If you are installing a OneCell system with GPS timing, you will need a coaxial cable with an SMA-type male connector to the Baseband Controller. For information on RF gain requirements, see *OneCell® Network Planning Guide, v4.5* (M0303A1).

Installing the Baseband Controller into a rack

The Baseband Controller can be installed in a 19-inch or 600mm rack. The Baseband Controller Chassis package contains two kits: one with 19-inch brackets and one with 600mm brackets.

CAUTION

The Baseband Controller, when mounted, must be in the horizontal position. No other orientations are allowed.

NOTE

The chassis requires four screws to secure it into the rack.

1. Select the 19-inch or 600mm bracket kit according to the size of the rack. Attach the brackets to the Baseband Controller Chassis

DRAFT

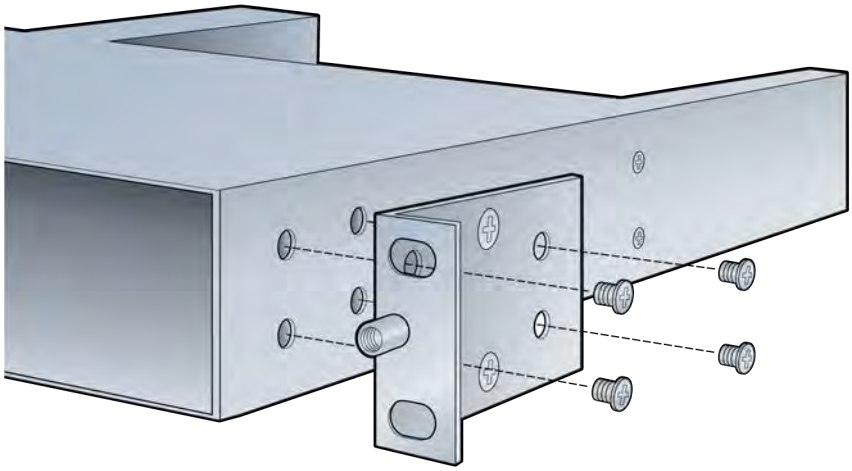

2 Slide the chassis into the rack.

3 Line up the holes in the chassis ears to the holes in the rack.

4 Secure the chassis with the screws.

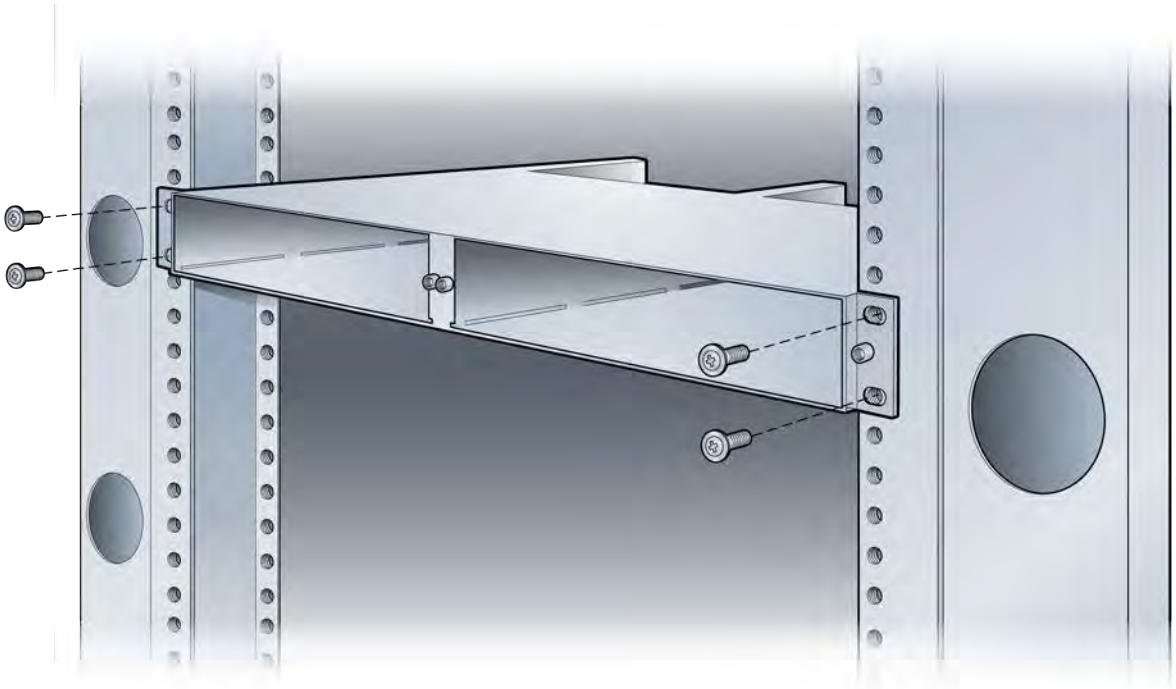

DRAFT

5 Carefully slide the BC into the front of the chassis.

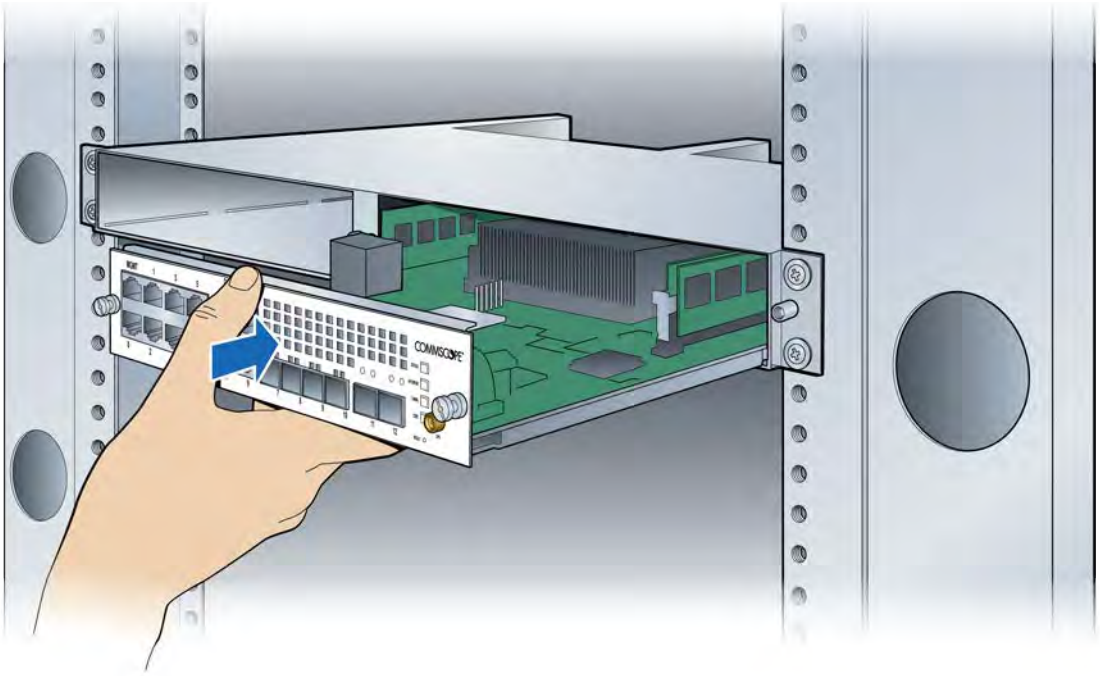

6 Secure the BC by tightening the front panel screws.

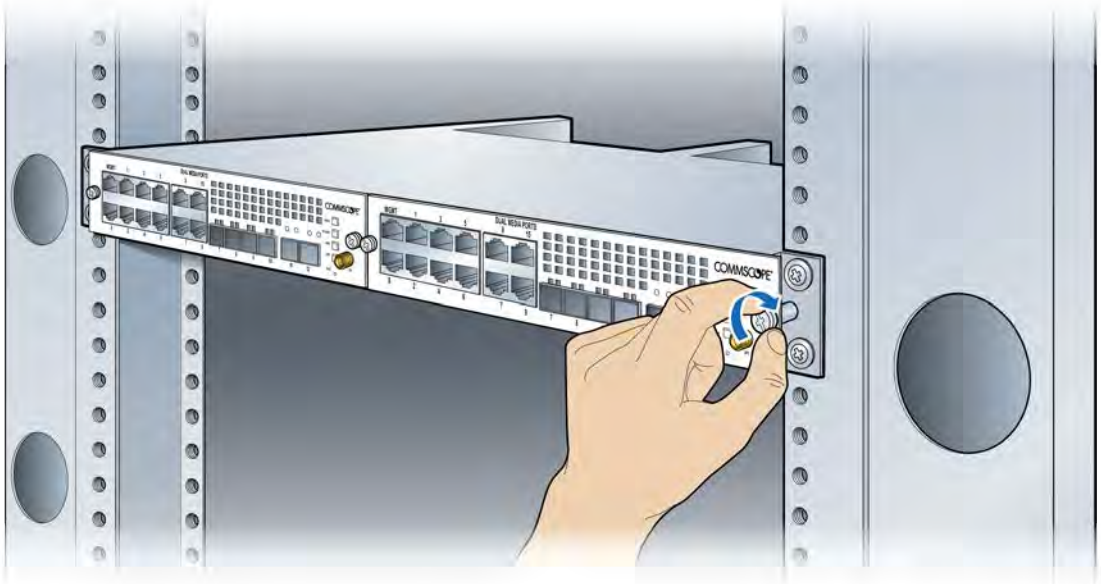

DRAFT

7 In the back of the rack, carefully slide the PFU into the back of the chassis.

CAUTION

The PFU has a fan hazard. A label is affixed to the top of the PFU indicating the hazard.

NOTE: The connectors on the PFU should fit easily into the connector on the BC. Do not force the PFU into the chassis.

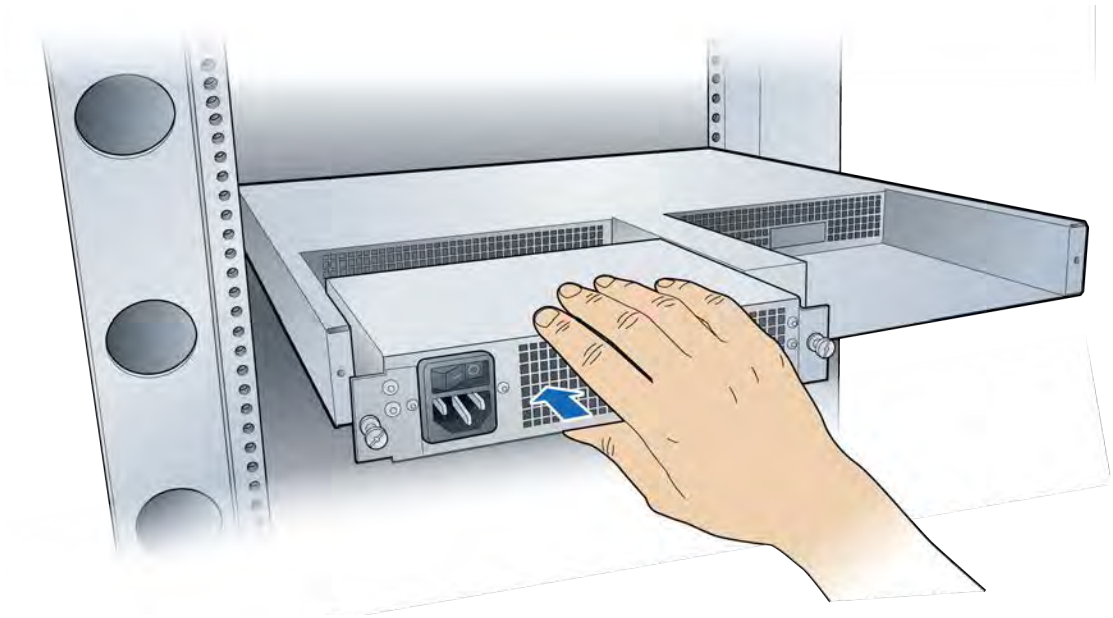

DRAFT

8 Secure the PFU by tightening the thumb screws.

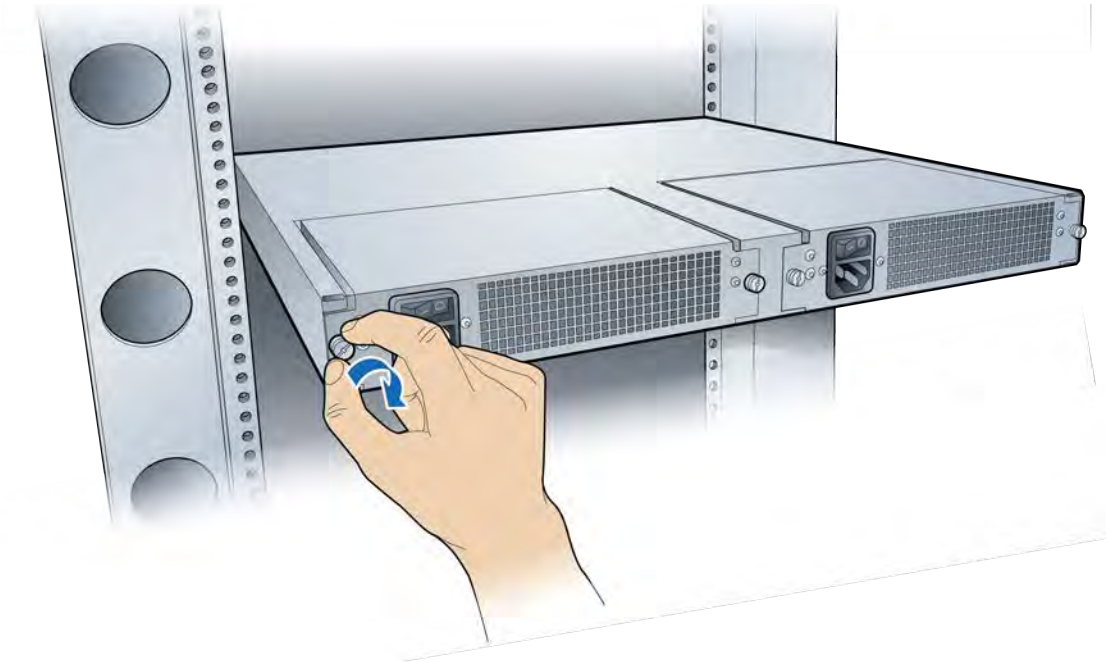

9 Connect the power cord to the PFU.

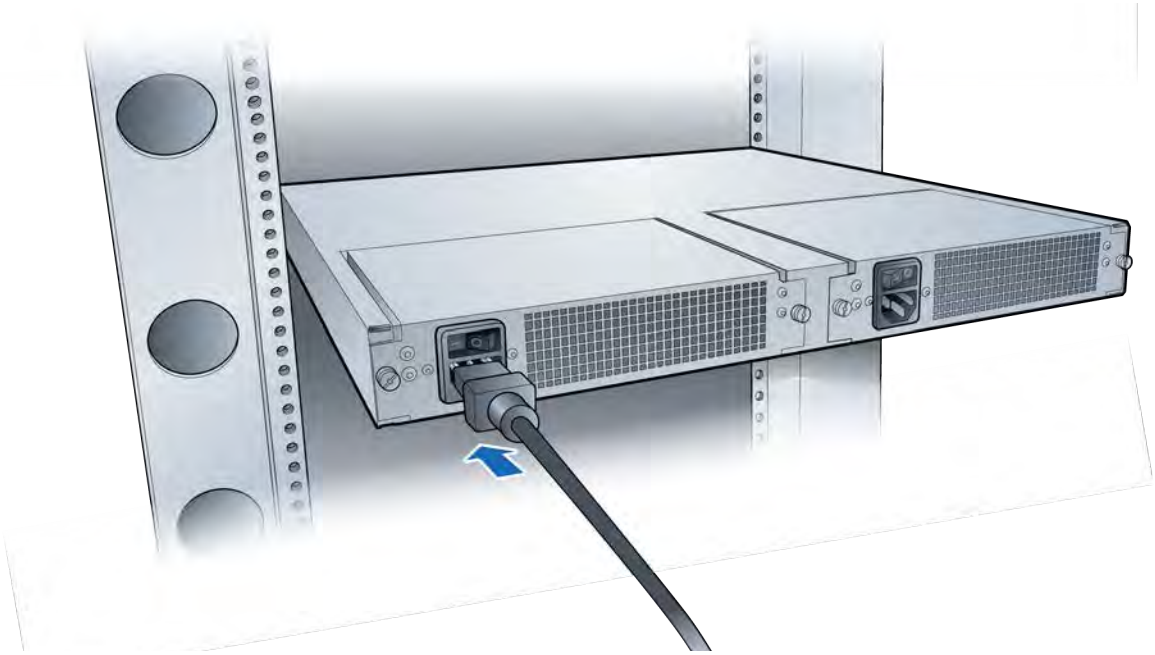

DRAFT

10 On the Baseband Controller Module's front panel, connect the GPS antenna cable.

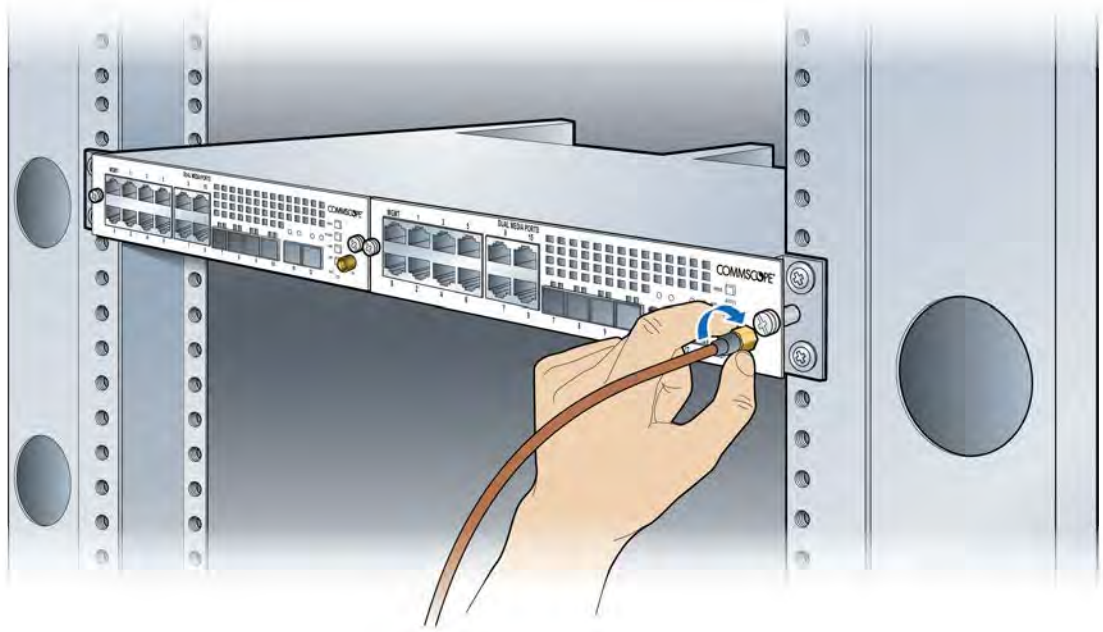

11 Connect the Ethernet or fiber optic cable to the appropriate port.

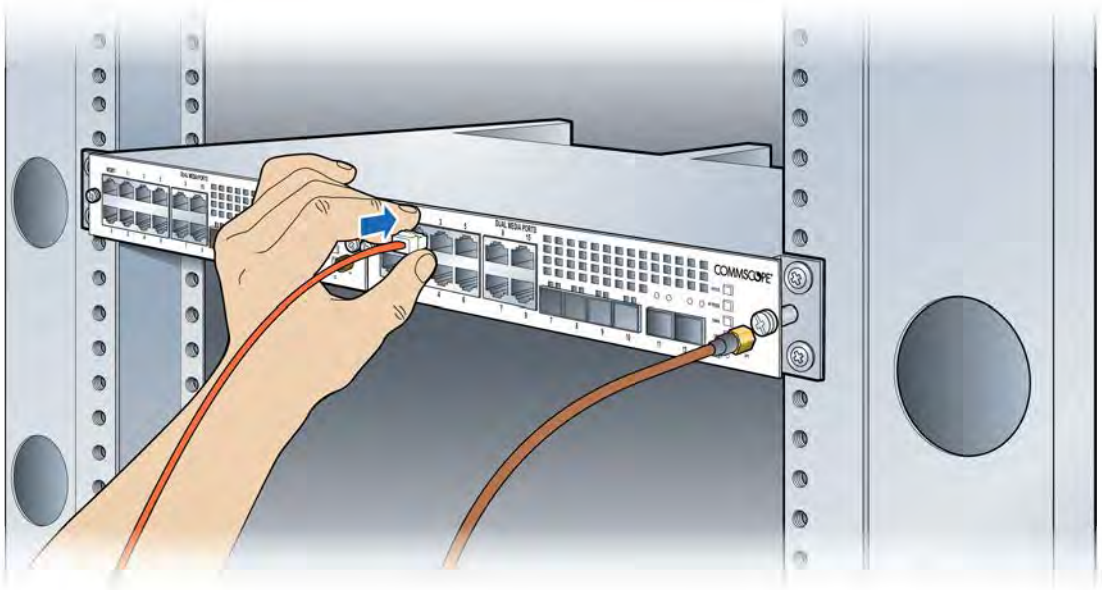

DRAFT

12 On the back of the Baseband Controller, turn on the power.

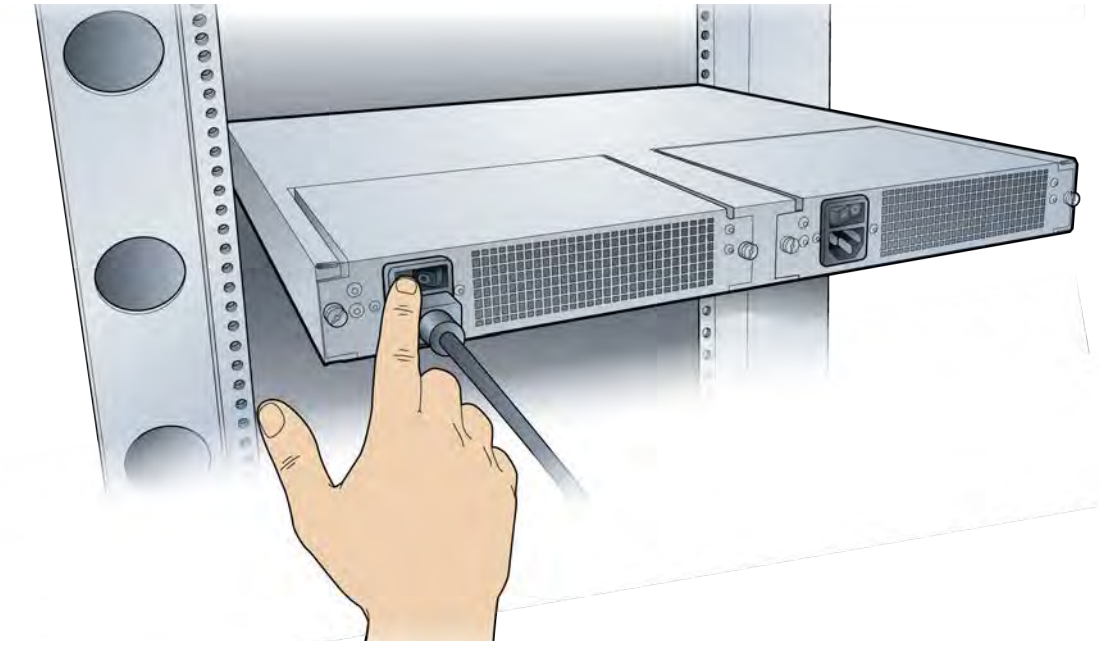

The LEDs on the front panel will be solid green, when the power is on. If none are on, check your power connection. If the LED pattern is other than all green, see Baseband Controller LED patterns on page B-2.

DRAFT

Chapter 4

RP5100i installation

This chapter describes installing indoor Radio Points on ceiling tiles, above ceiling tiles, on poles and in a flown configuration.

RP5100i installation overview	4-2
Ceiling mount	4-3
Flown mount	4-22
Pole mount	4-31

DRAFT

RP5100i installation overview

The RP5100i is the Radio Point for indoor solutions.

There are four configurations for installing the RP5100i, which are dependent on the ceiling type.

- Ceiling mount, on tile
- Ceiling mount, above tile
- Flown mount
- Pole mount

NOTE

Once the Radio Point is installed and powered on, it may take up to 20 minutes for the frequency to stabilize and lock.

NOTE

If the MR port is connected to a switch that does not provide IEEE802.3bt, type-4 PoE power, the SR port can be used to provide power with a PoE++ injector. For more information, see *OneCell® Network Planning Guide, v4.5* (M0303A1).

DRAFT

Ceiling mount

Mounting the Radio Point (RP) above or on the ceiling tile requires the following hardware provided by CommScope:

- Radio Point plate and screws
- 4" octagon box, 1-1/2" deep with 1/2" side cutouts
- Clamp and screw

Figure 4-1. CommScope ceiling mount kit contents

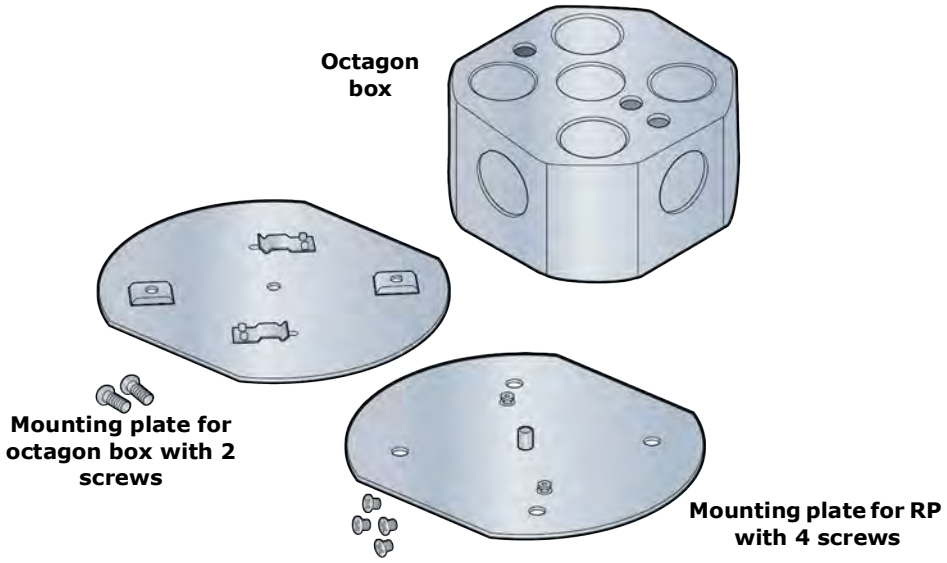

DRAFT

Mounting the Radio Point (RP) above or on the ceiling tile requires the following hardware provided by the system integrator:

- Drop rail – Eaton B-line BA50A or equivalent, with a static load capacity of at least 25 lbs without a drop wire, recommended

Figure 4-2. Drop rail, system integrator-provided

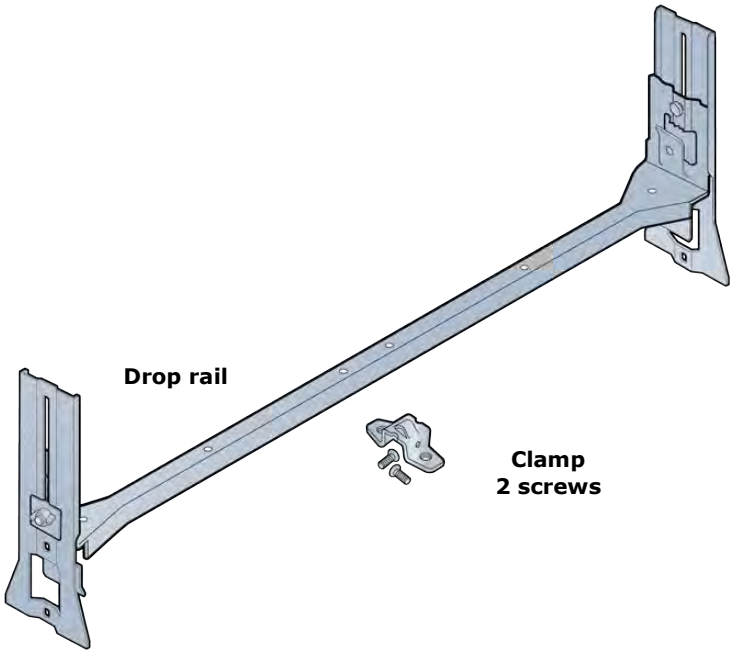

DRAFT

Mounting the Radio Point on the ceiling tile

1 Remove two ceiling tiles from the overhead.

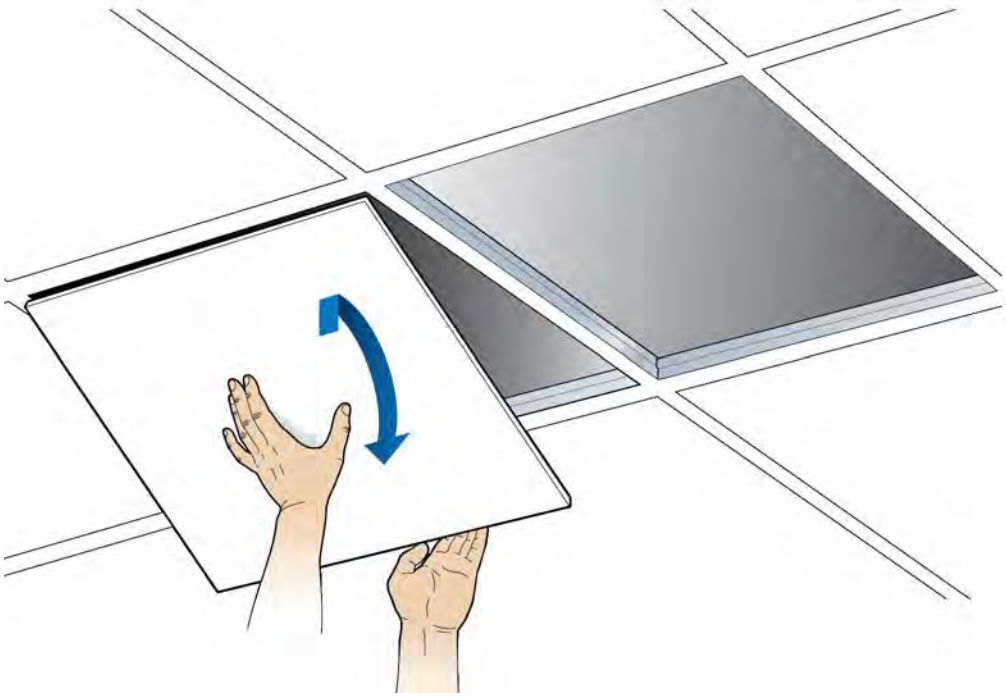

2 Place the octagon box on the tile and trace the outline. Cut the opening.

3 Drill a 1/2-inch diameter hole for the Ethernet cable pass-through.

NOTE: Use a 1-1/2 deep RACO 8125 or equivalent.

DRAFT

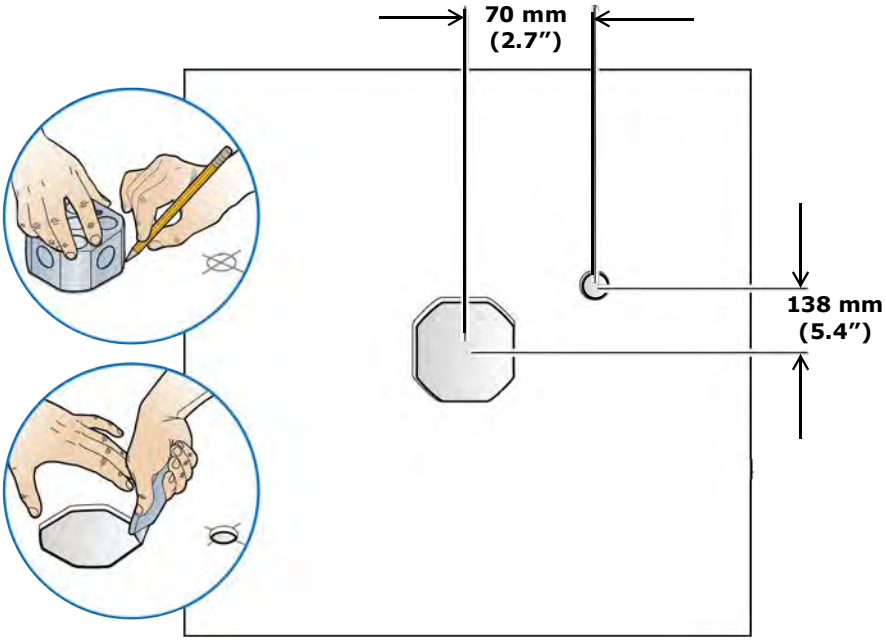

4 Attach the octagon box to the ceiling bracket using a clamp and screw.

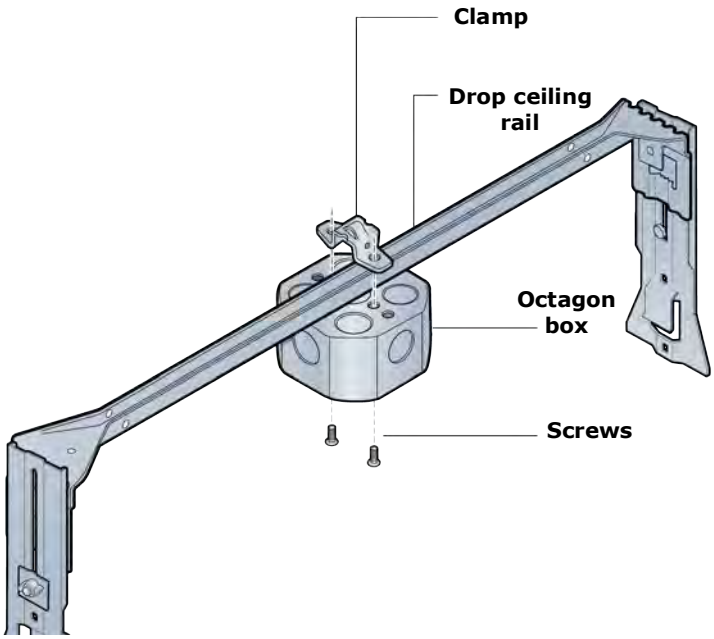

DRAFT

5 Replace the ceiling tile with the cutouts.

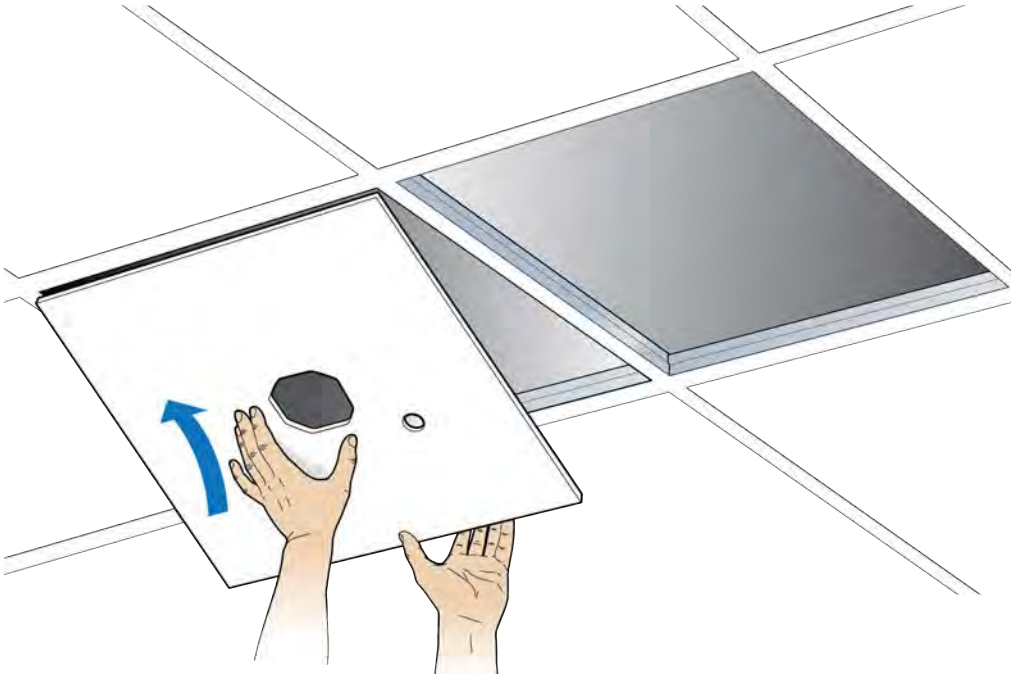

DRAFT

6 Install the drop rail/octagon box assembly over the modified tile.

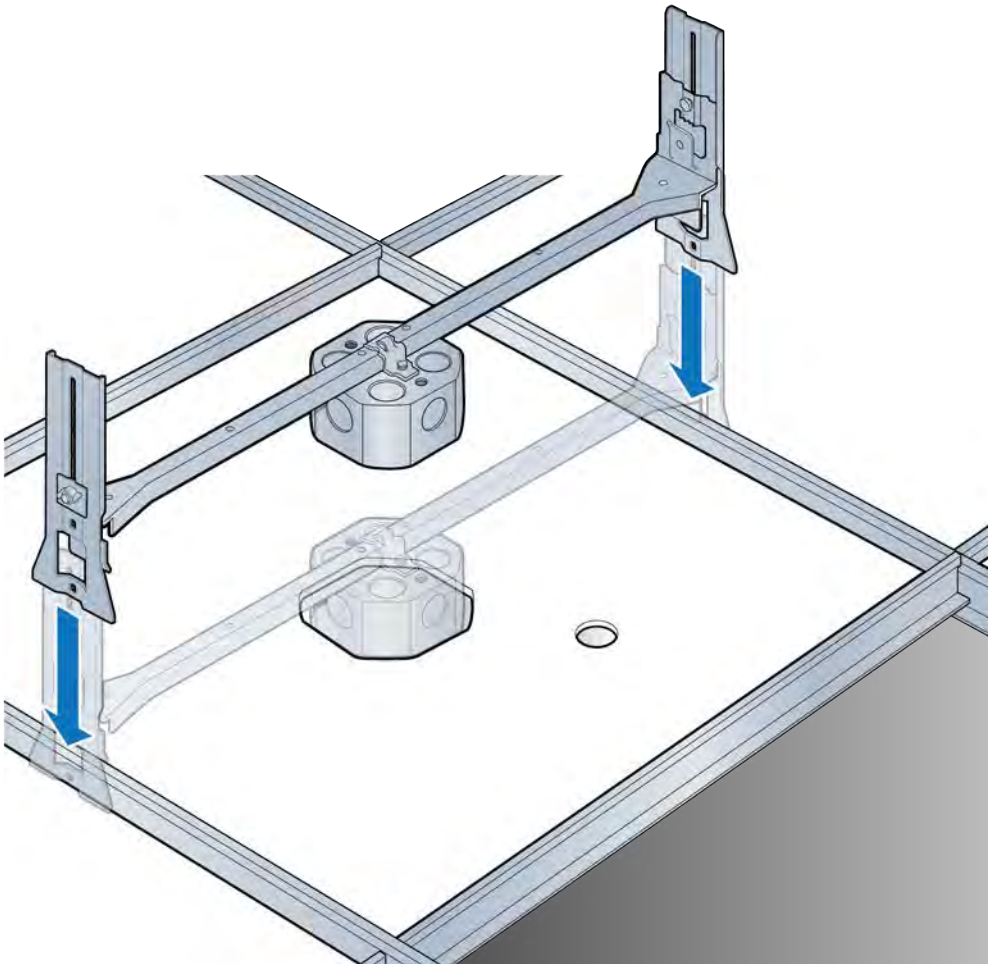

DRAFT

7 Attach the mounting plate onto the octagon box and feed the Ethernet cable through the small hole in the ceiling tile.

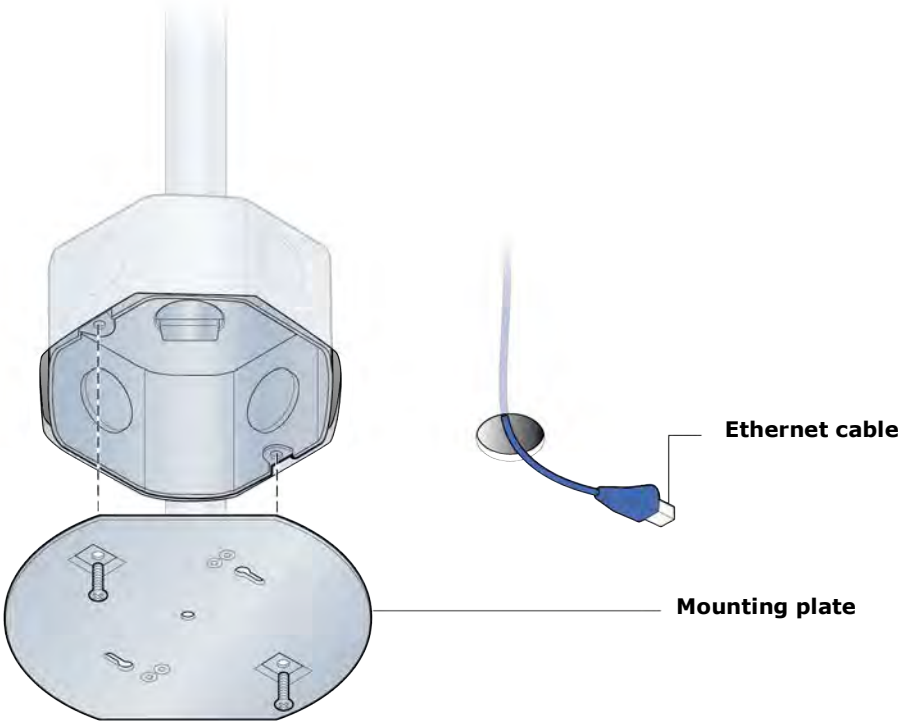

DRAFT

8 Attach base plate to the Radio Point.

NOTE: Apply thread locking compound to screws prior to installation.

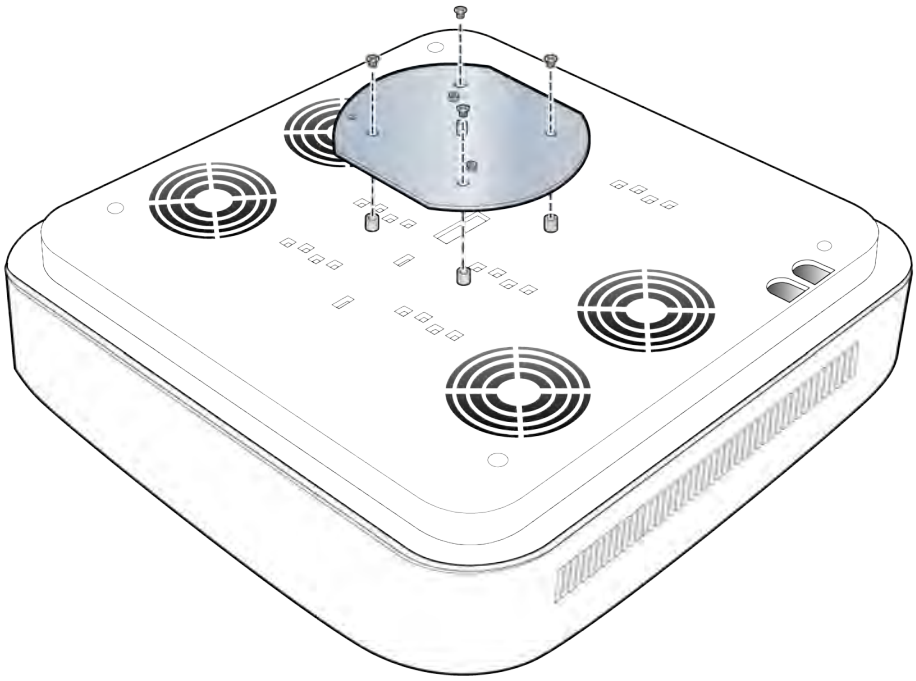

9 Mount the Radio Point on the octagon box plate.

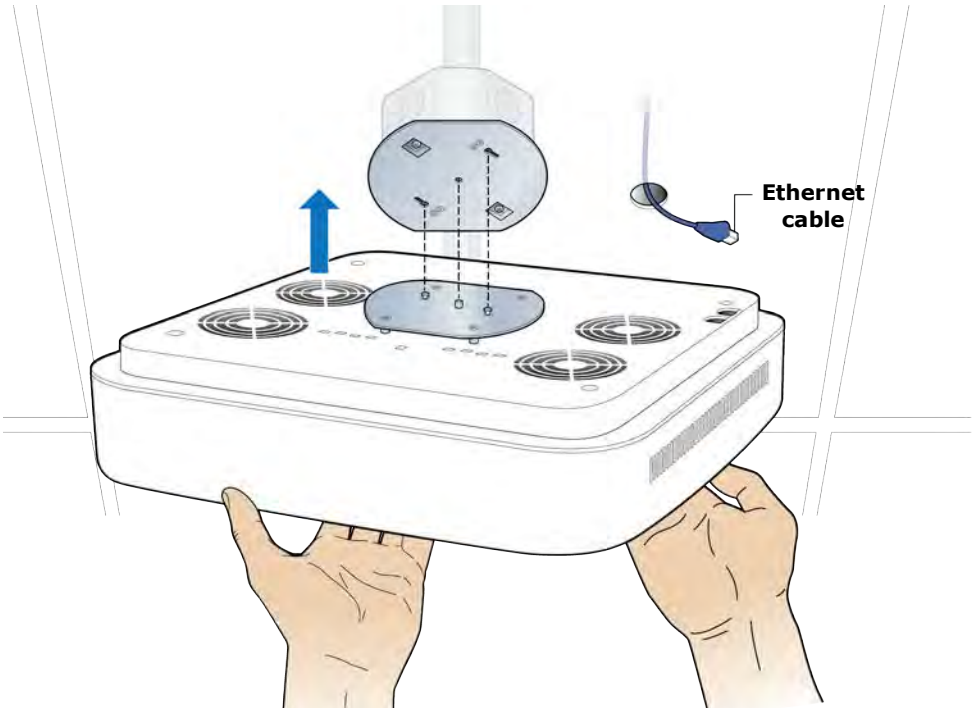

DRAFT

10 Secure Radio Point to the octagon plate.

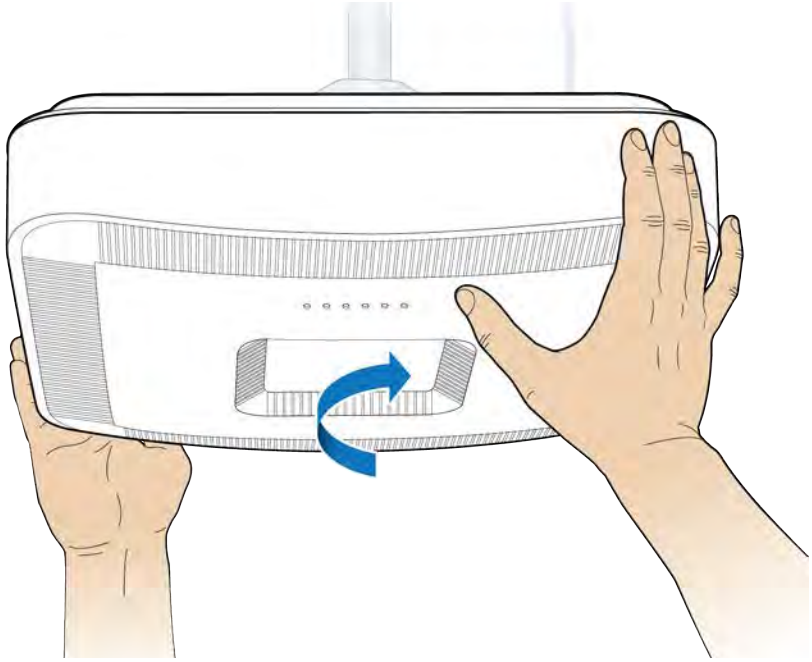

DRAFT

11 Remove the cover from the RP.

NOTE: The cover is attached to the RP with two lanyards.

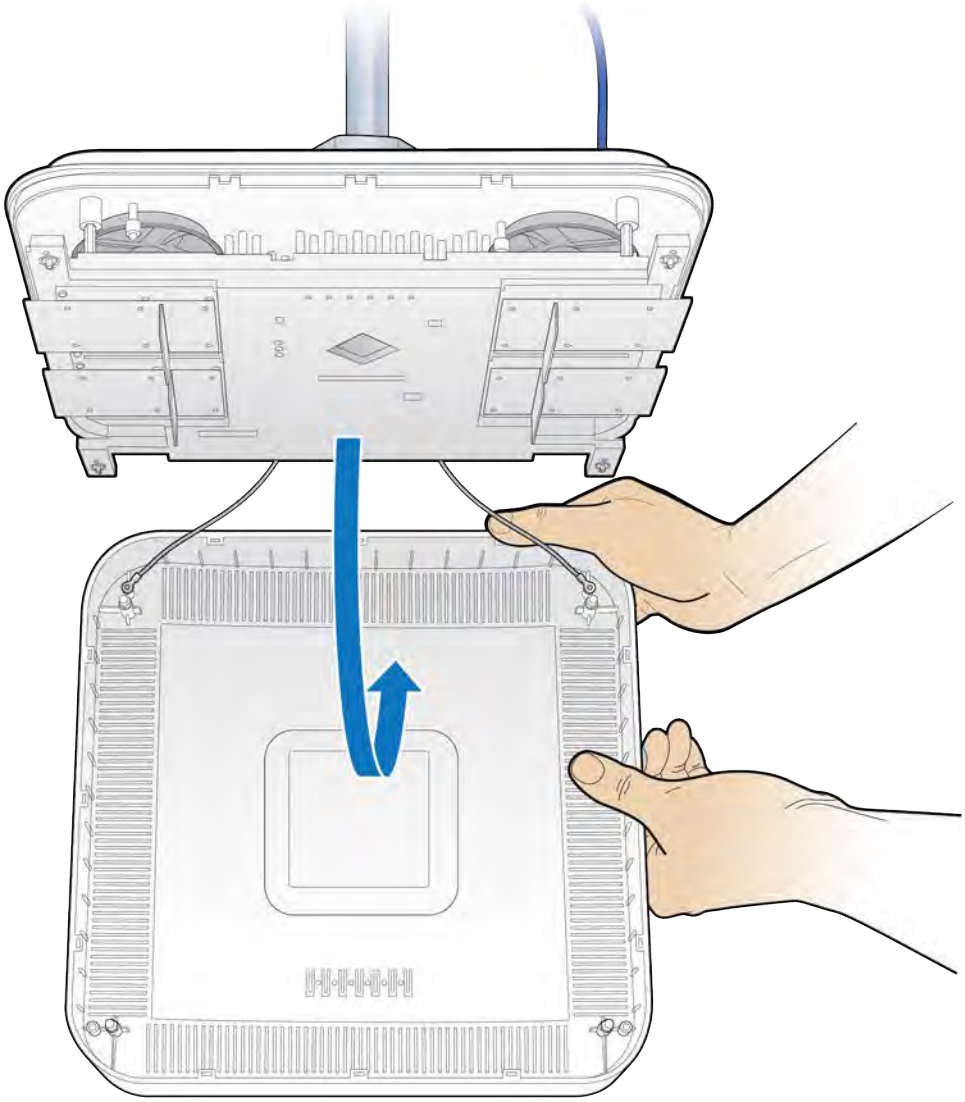

DRAFT

12 Connect Ethernet cable to the MR port on the Radio Point.

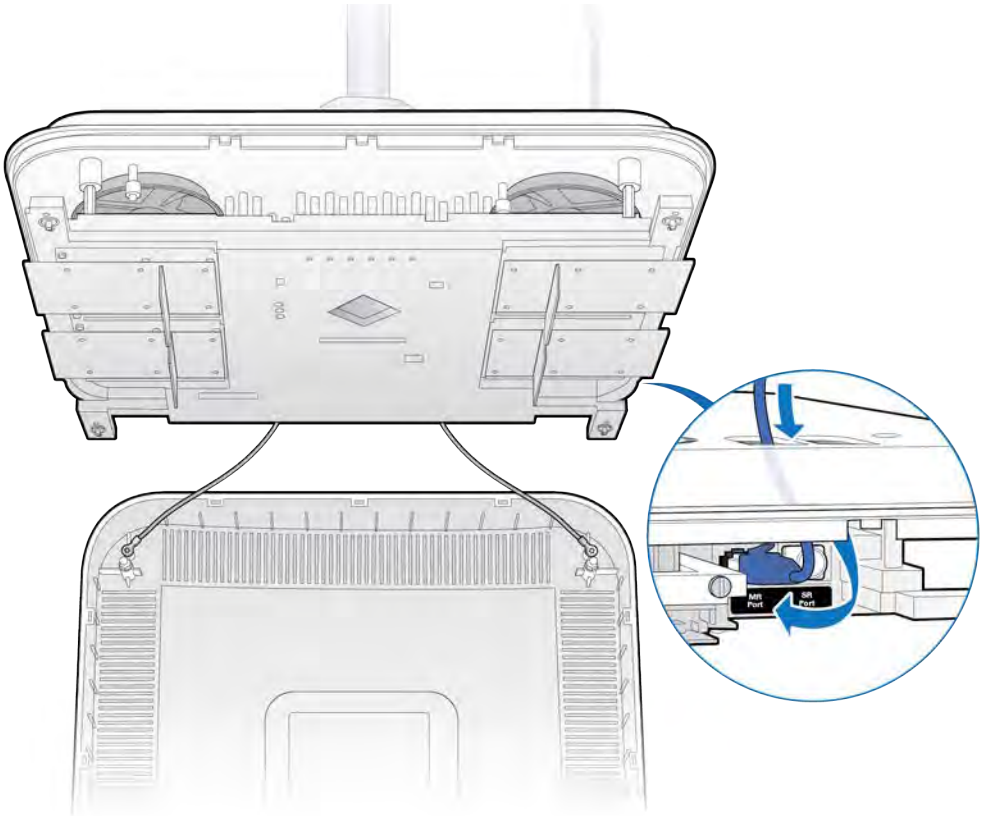

DRAFT

13 Replace plastic cover on the Radio Point.

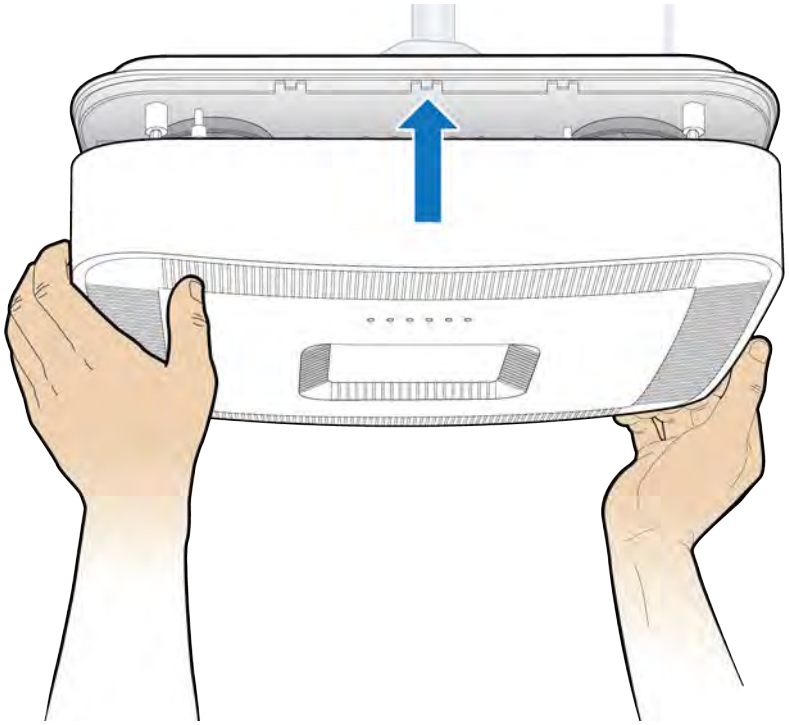

14 Replace the ceiling tile next to the Radio Point.

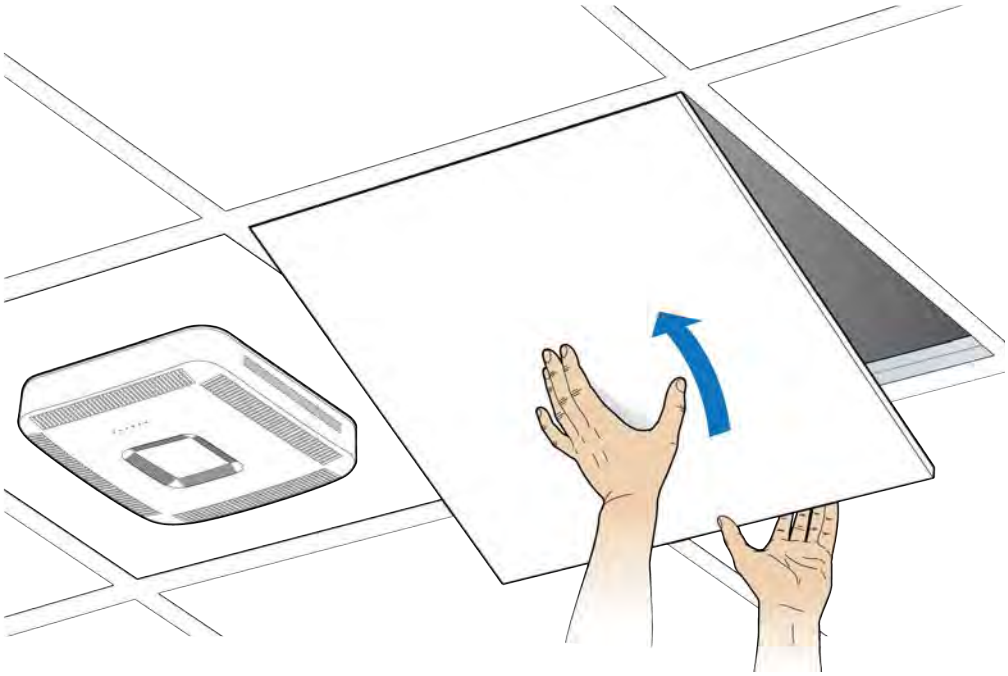

DRAFT

Mounting the Radio Point above the ceiling tile

1 Remove ceiling tile from the overhead.

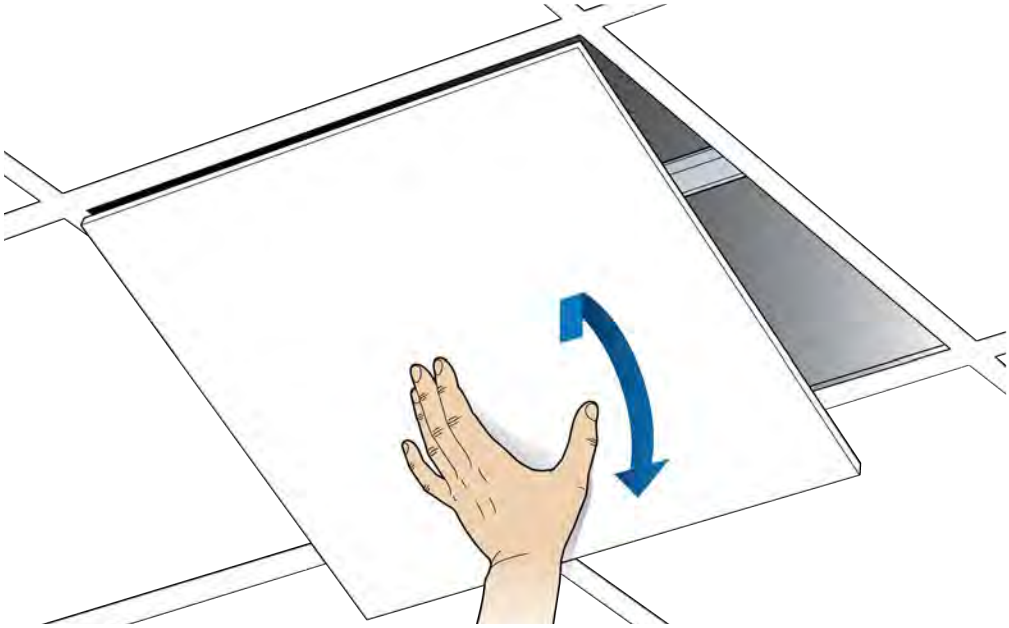

DRAFT

2 Attach the octagon box to the bracket.

NOTE: CommScope recommends an Eaton B-line – BA50A adjustable bracket.

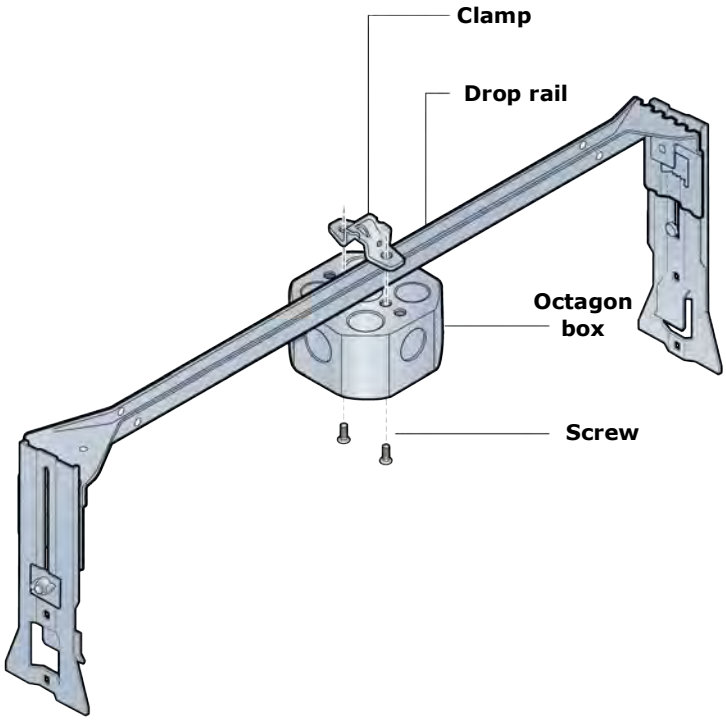

DRAFT

3 Attach the bracket to the mounting plate to the octagon box.

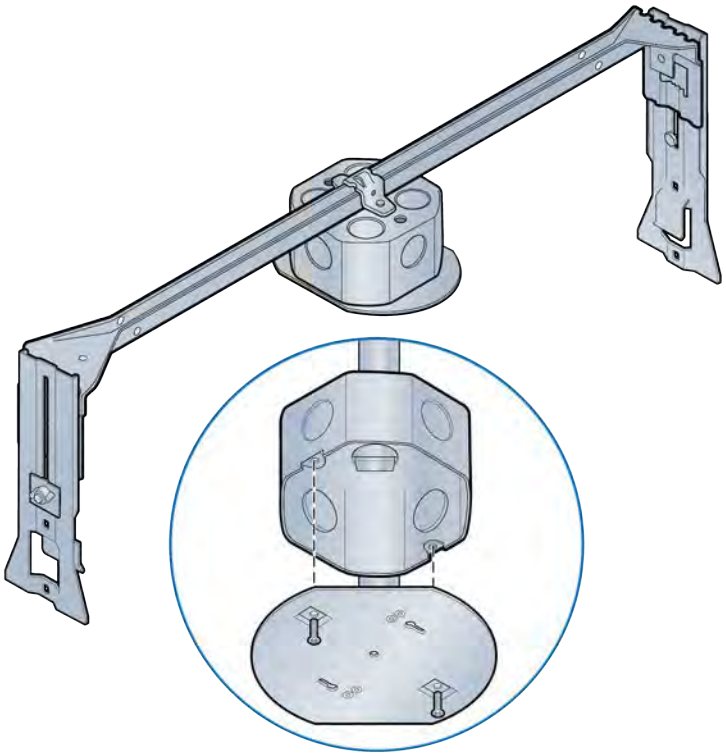

4 Attach plate to the Radio Point.

NOTE: Apply thread locking compound to screws prior to installation.

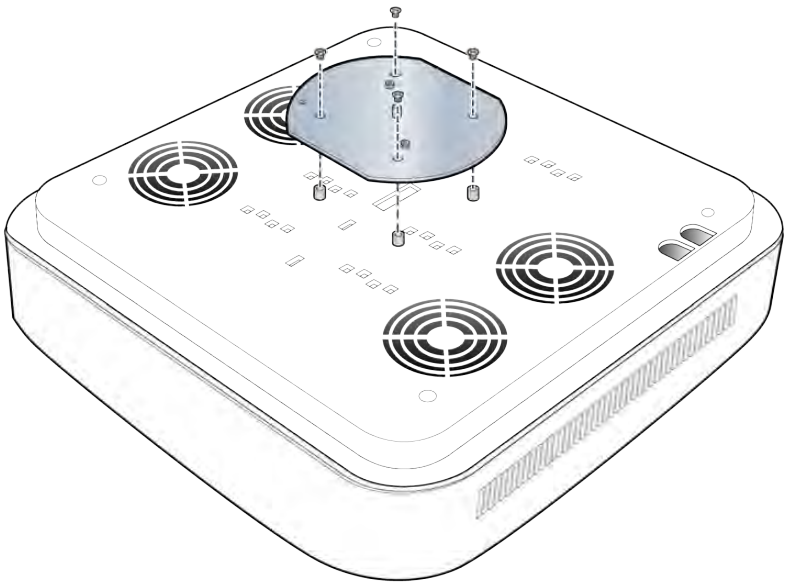

DRAFT

5 Attach the Radio Point to the octagon box mounting plate.

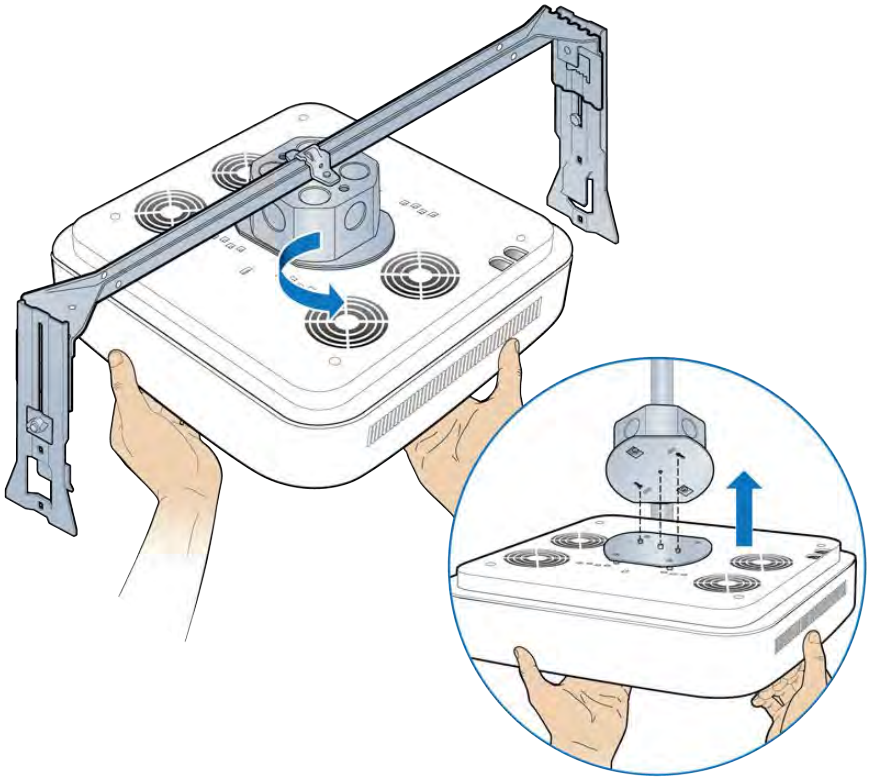

DRAFT

6 Install drop rail above the ceiling tile.

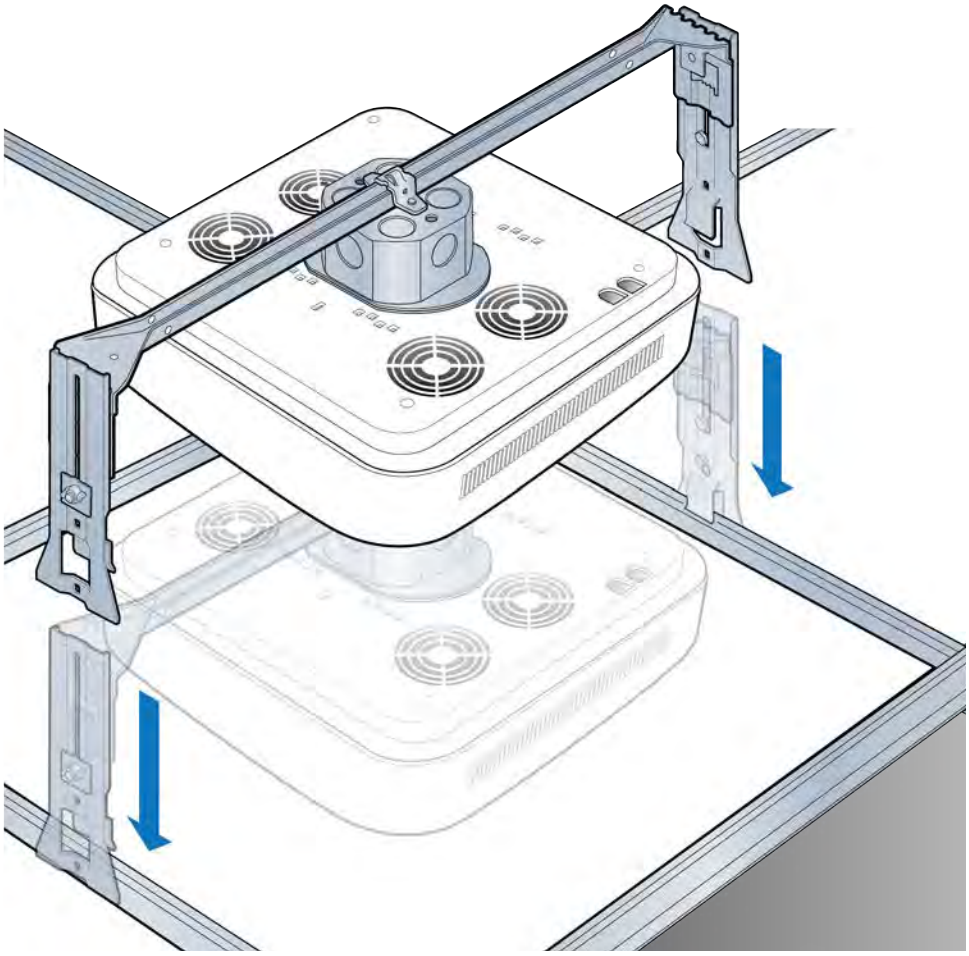

DRAFT

7 Remove the cover from the RP.

NOTE: The cover is attached to the RP with two lanyards.

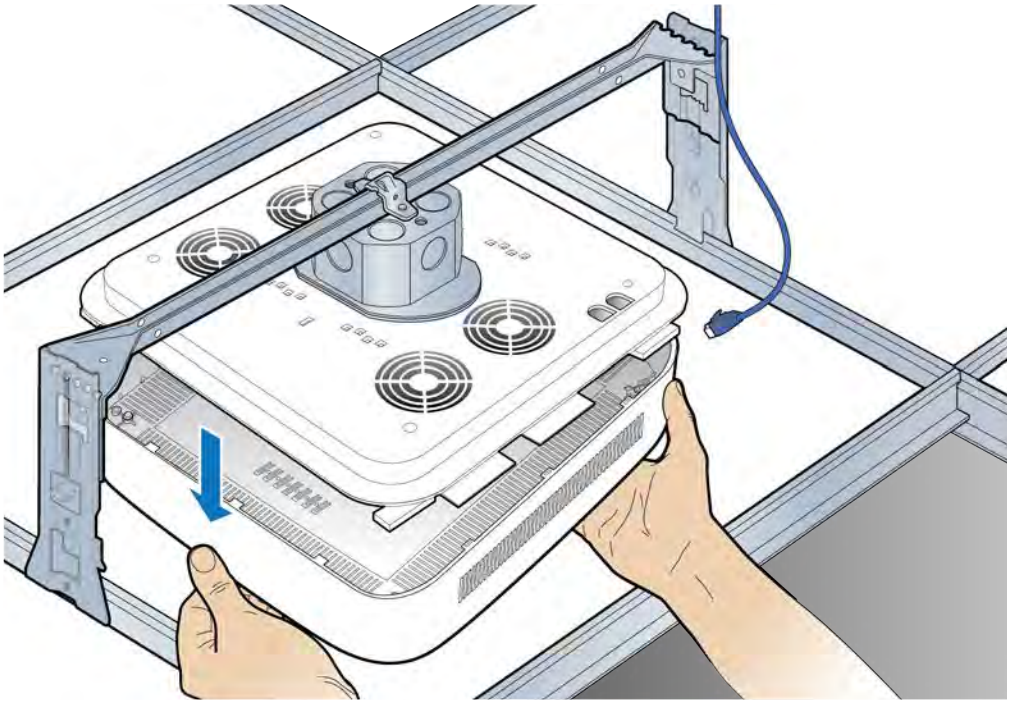

8 Connect the Ethernet cables to the Radio Point MR port.

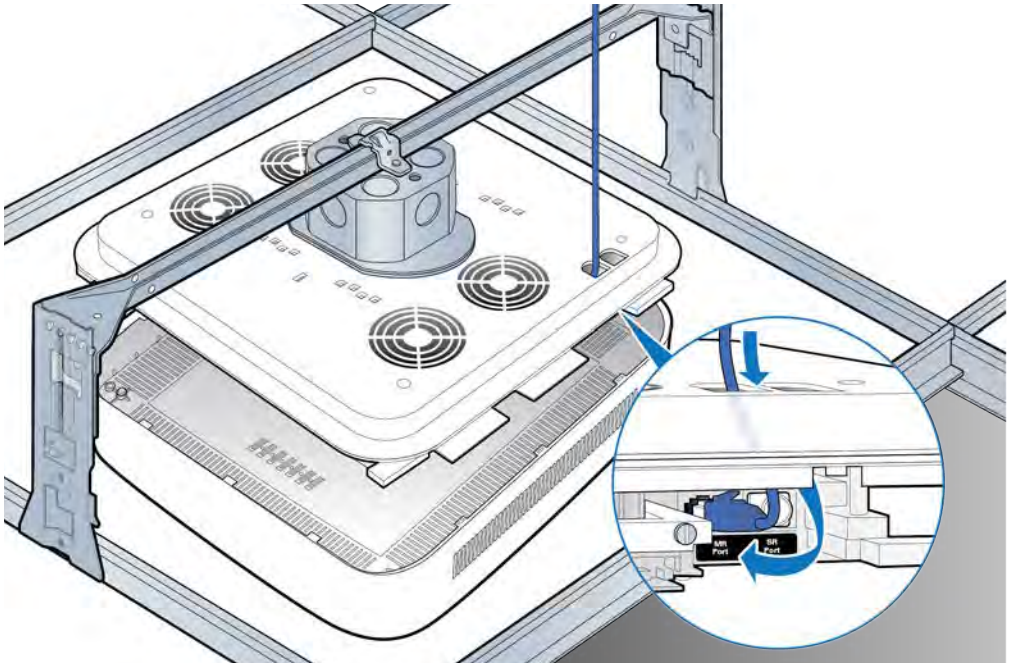

DRAFT

9 Replace the cover on the Radio Point.

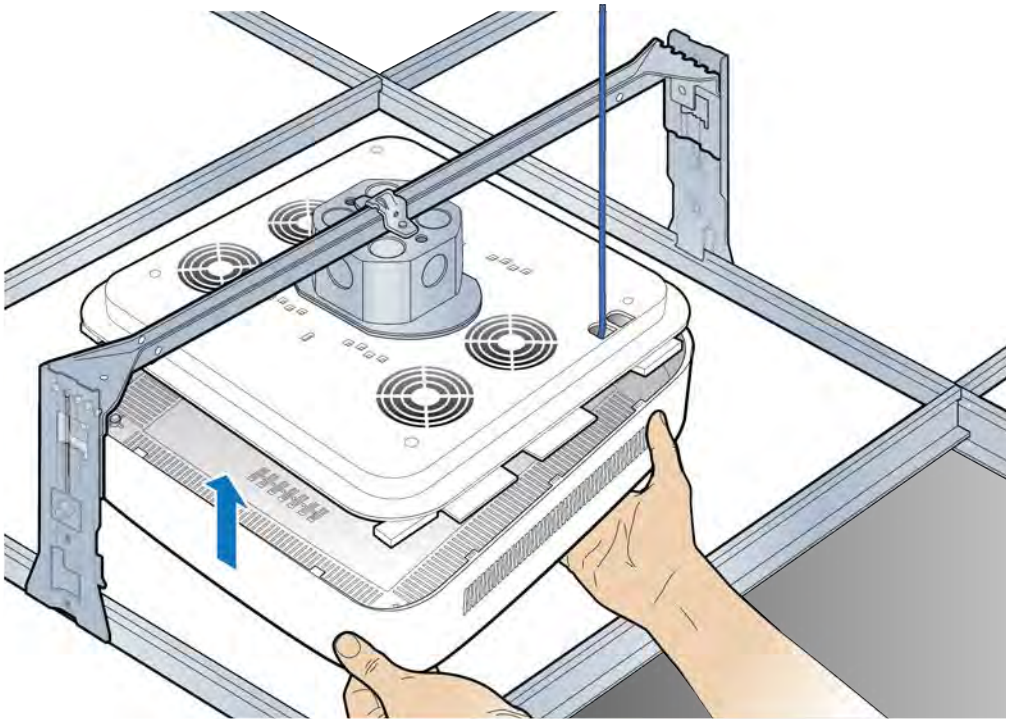

NOTE: The minimum clearance for cooling is 3 inches.

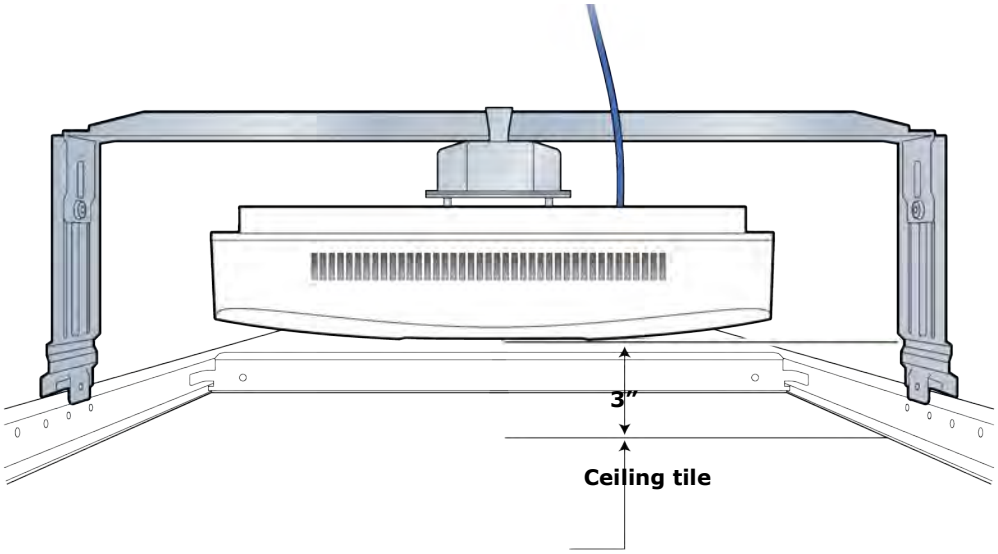

DRAFT

10 Replace the ceiling tile.

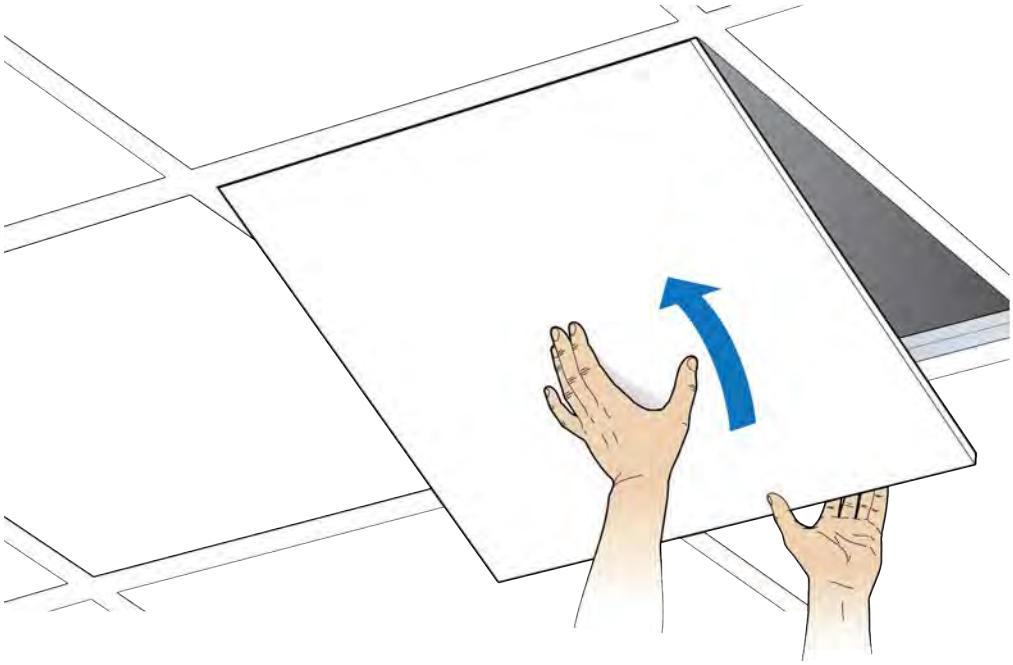

Flown mount

The Radio Point can be flown mounted on the end of a rod. This configuration is used for building where there are no drop ceilings.

Mounting the Radio Point (RP) in the flown configuration requires the following hardware provided by CommScope in the mounting kit:

- Radio Point plate and screws
- 4" octagon box, 1-1/2" deep with 1/2" side cutouts

  NOTE: Remove the top, middle cutout.

- Clamp and screw – this hardware is not required for the flown mount option

DRAFT

Figure 4-3. CommScope flown mount kit contents

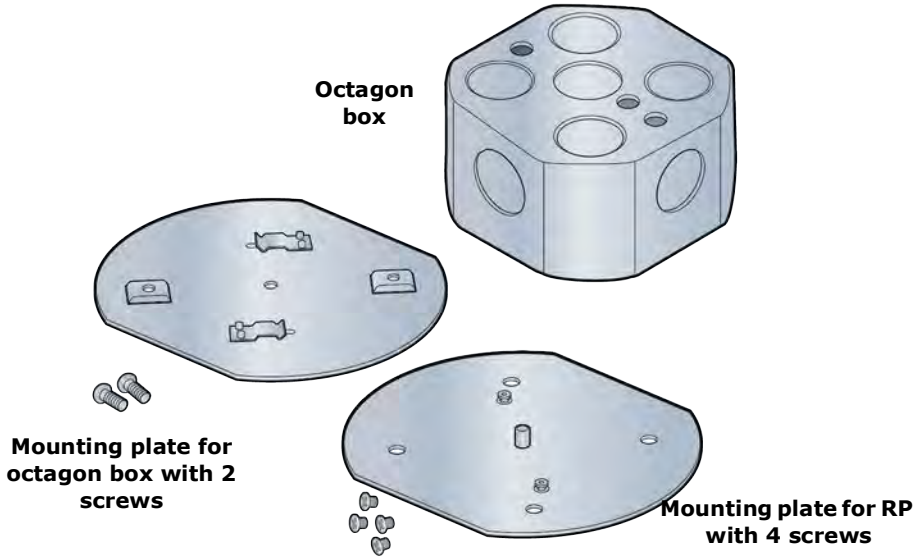

Mounting the Radio Point (RP) in the flown configuration requires the following hardware provided by the system integrator:

- Rod, 3/8-inch threaded
- Nut
- Lock nut, nylon
- Flat washers

DRAFT

Flown mount installation

1. Attach the threaded, 3/8-inch rod, cut to the required length, to the ceiling.
2. Install the nut and a flat washer on the rod.
3. Slide the octagon box on the rod and install a flat washer and the nylon lock nut.

   NOTE: Be sure the bracket is tight between the nuts and there is enough clearance at the end of the rod to attach the bracket to the Radio Point.

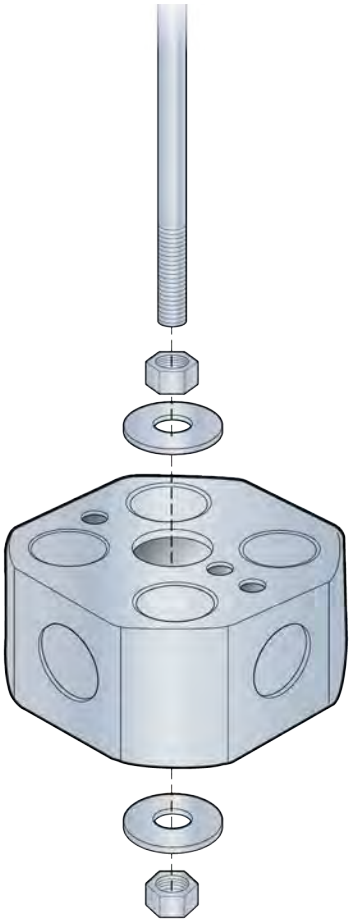

DRAFT

4 Attach plate to octagon box.

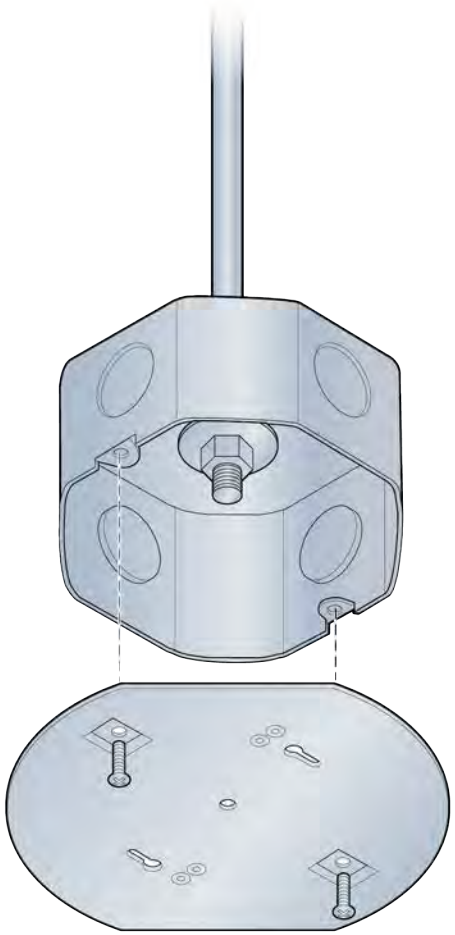

DRAFT

5 Attach the mounting plate to the Radio Point.

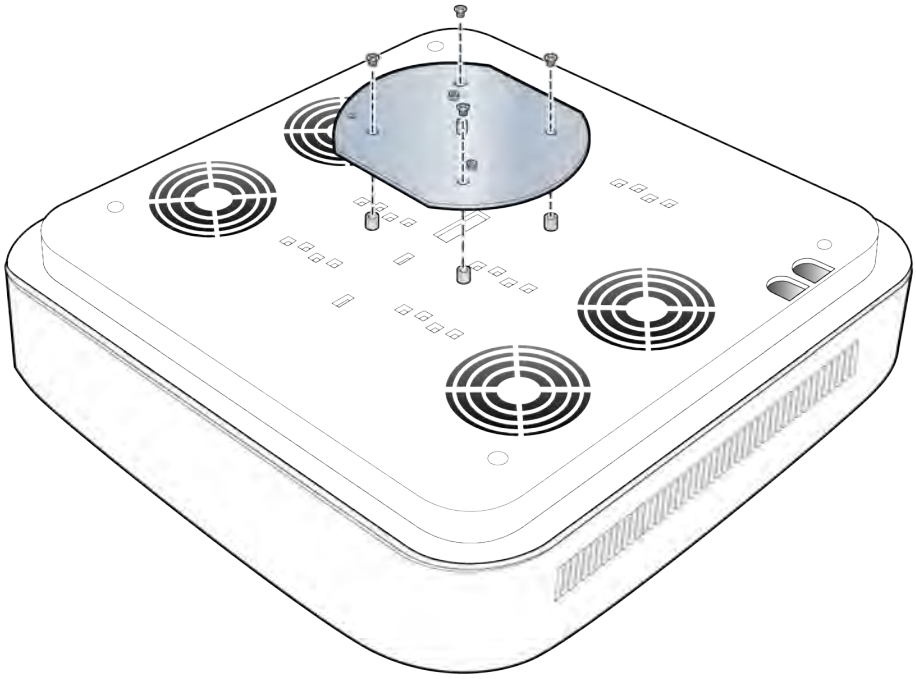

DRAFT

6 Attach the Radio Point to the octagon box.

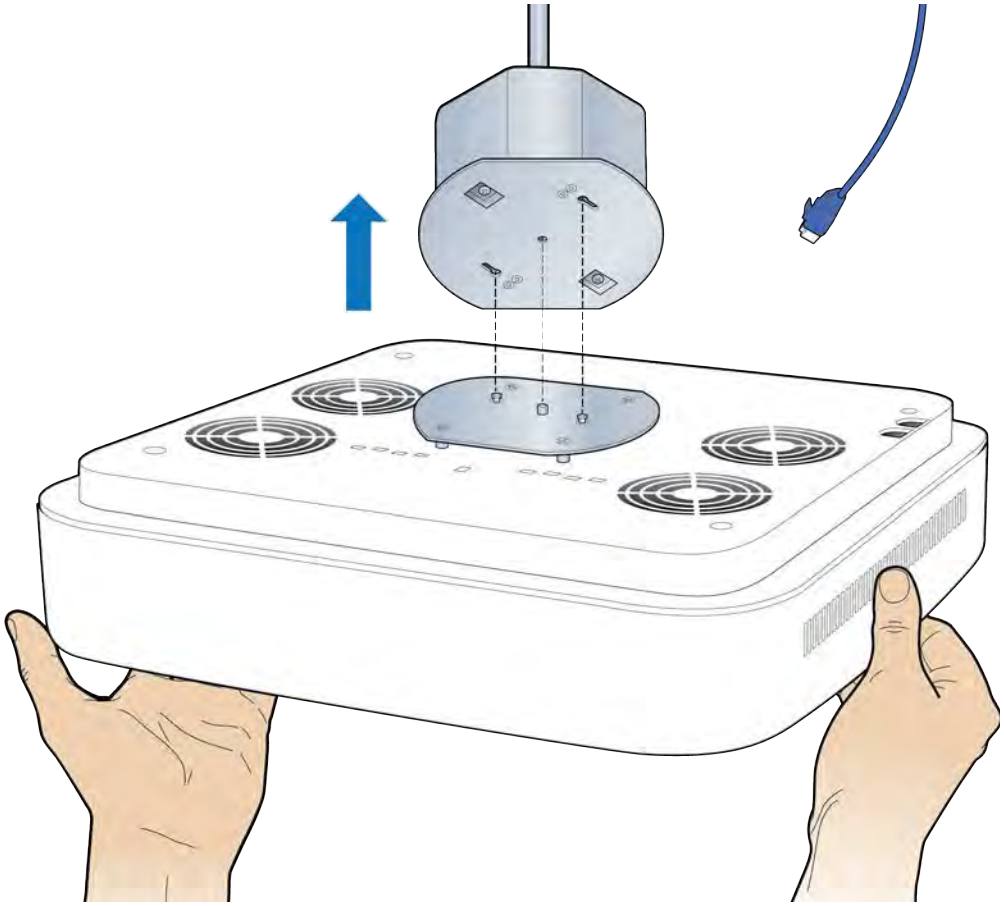

DRAFT

7 Remove the cover from the RP.

NOTE: The cover is attached to the RP with two lanyards.

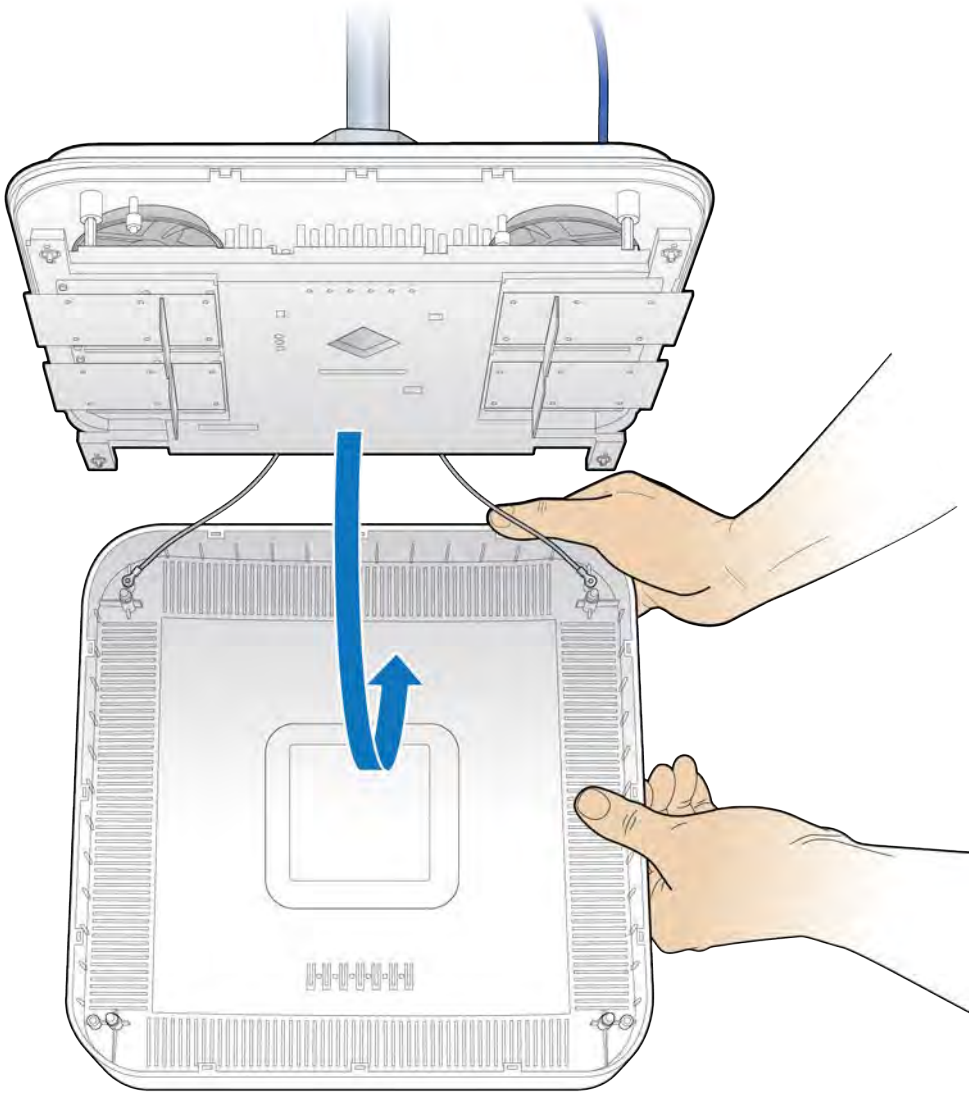

DRAFT

8 Connect the Ethernet cable to the Radio Point MR port.

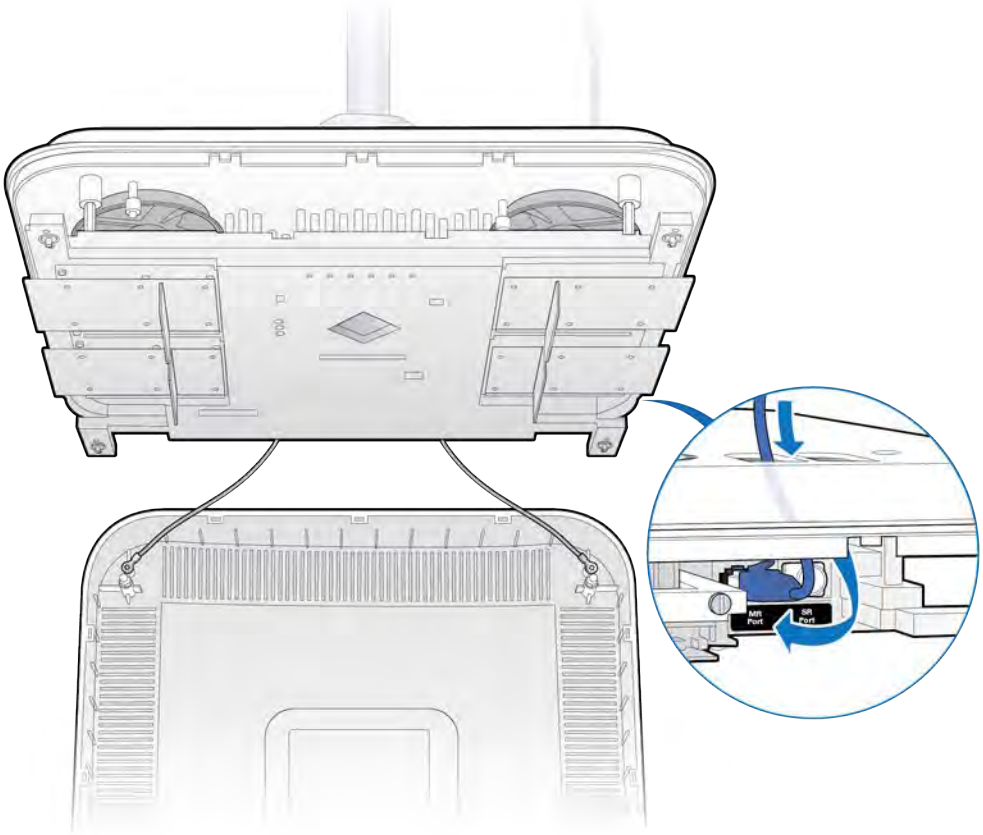

DRAFT

9 Attach the plastic cover to the Radio Point.

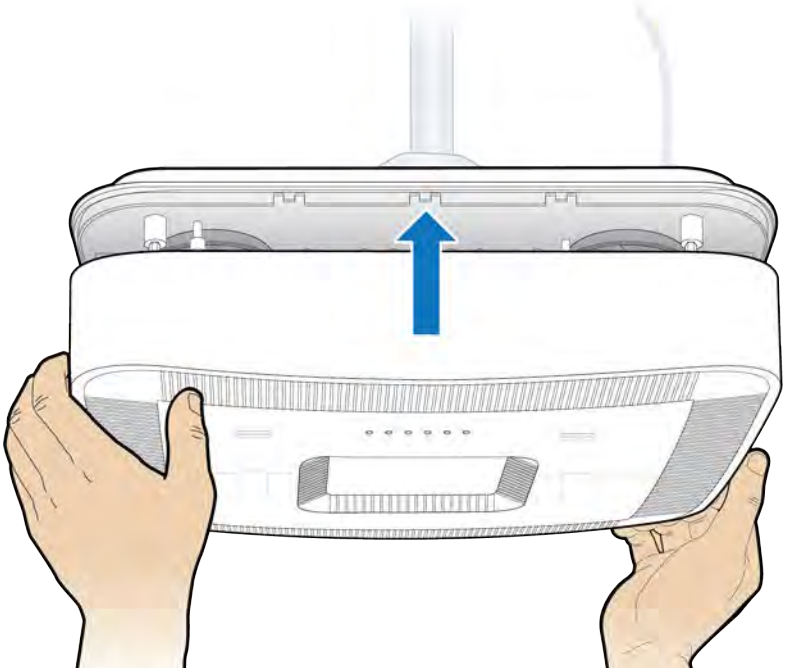

Installation is complete.

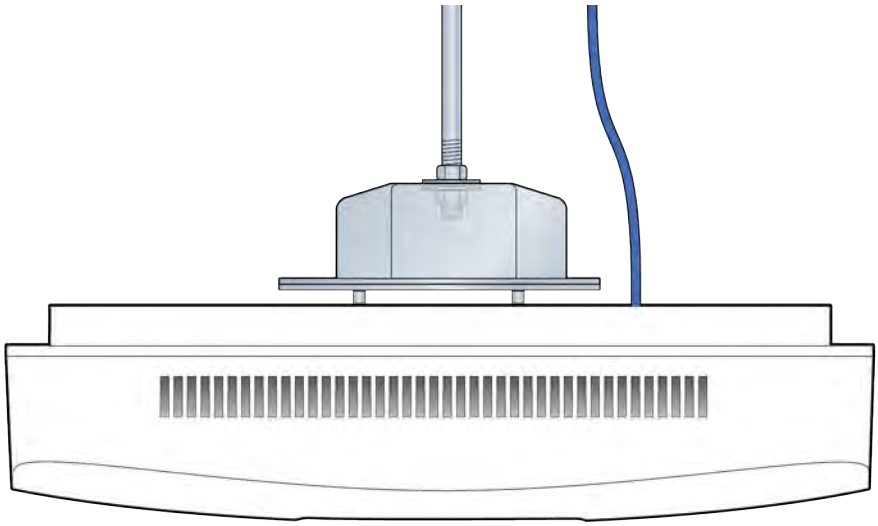

DRAFT

Pole mount

The Radio Point can be pole mounted. This configuration is used for building where there are no drop ceilings.

Mounting the Radio Point (RP) on a pole requires the following hardware provided by CommScope in the mounting kit:

- Mounting bracket
- Screws

Figure 4-4. Mounting bracket kit contents

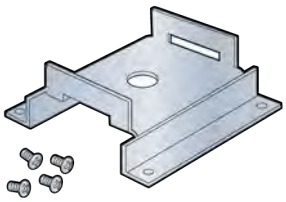

Mounting the Radio Point (RP) on a pole requires the following hardware provided by the system integrator:

- Adjustable clamp at least 2 inches larger than the circumference of the pole

Pole mount installation

1 Attach the bracket to the Radio point.

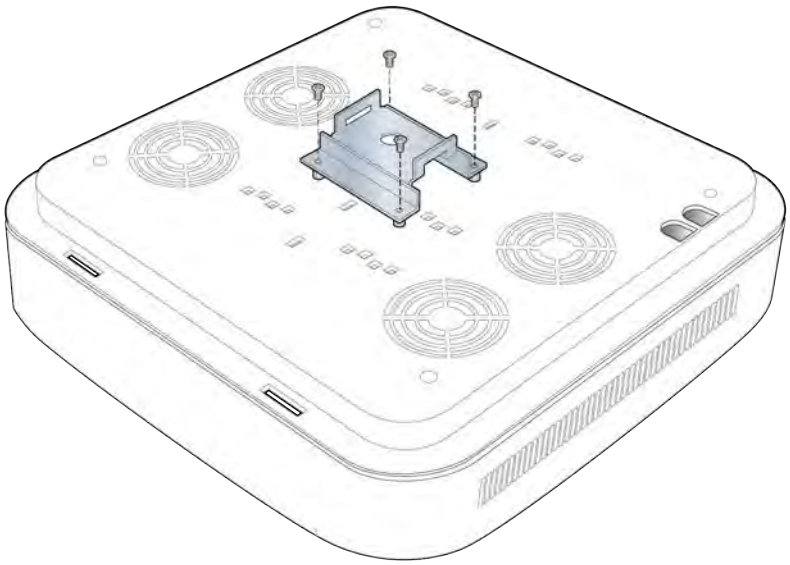

DRAFT

2 Slide the adjustable clamp through the slots on the Radio Point bracket.

3 Wrap the clamp around the pole and tighten the clamp screw to secure the Radio Point to the pole.

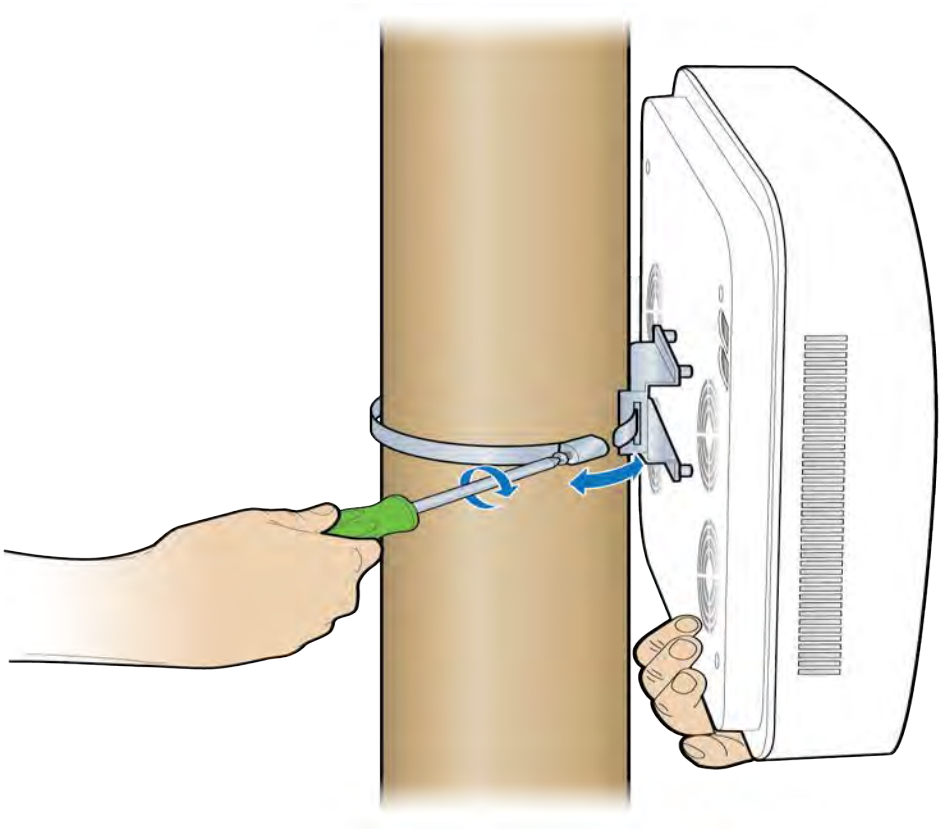

DRAFT

4 Remove the cover from the RP.

NOTE: The cover is attached to the RP with two lanyards.

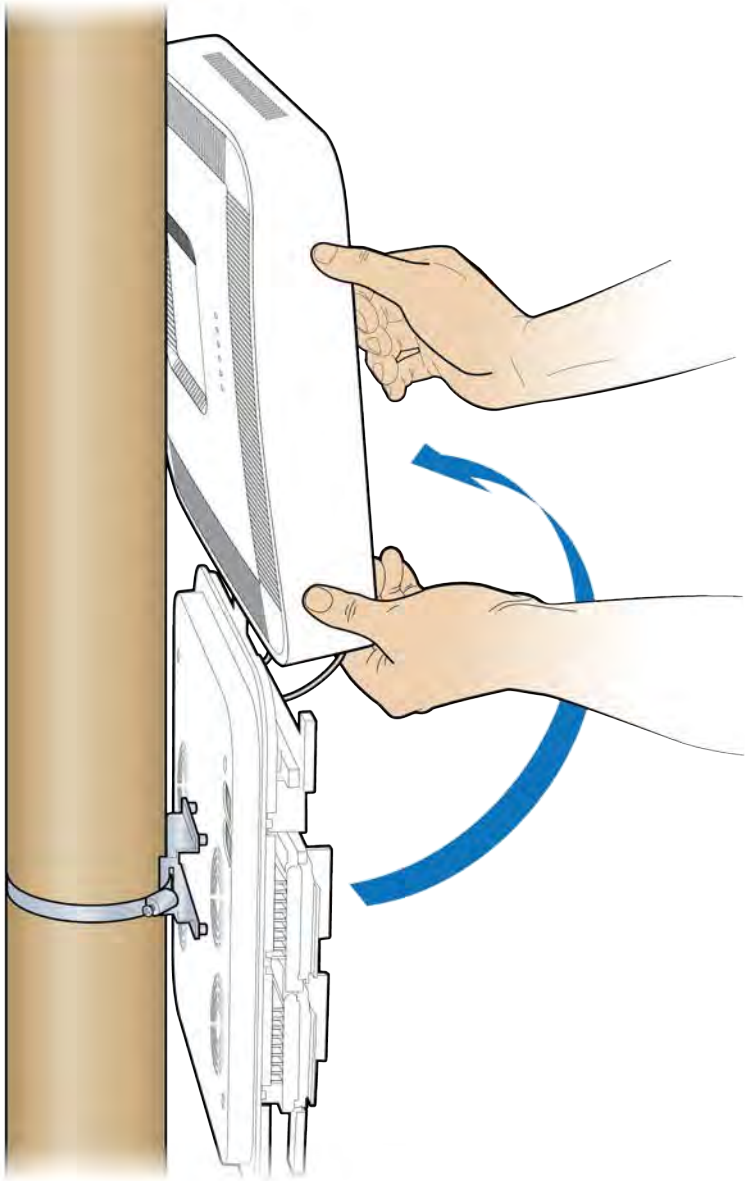

DRAFT

5 Connect the Ethernet cable to the Radio Point MR port.

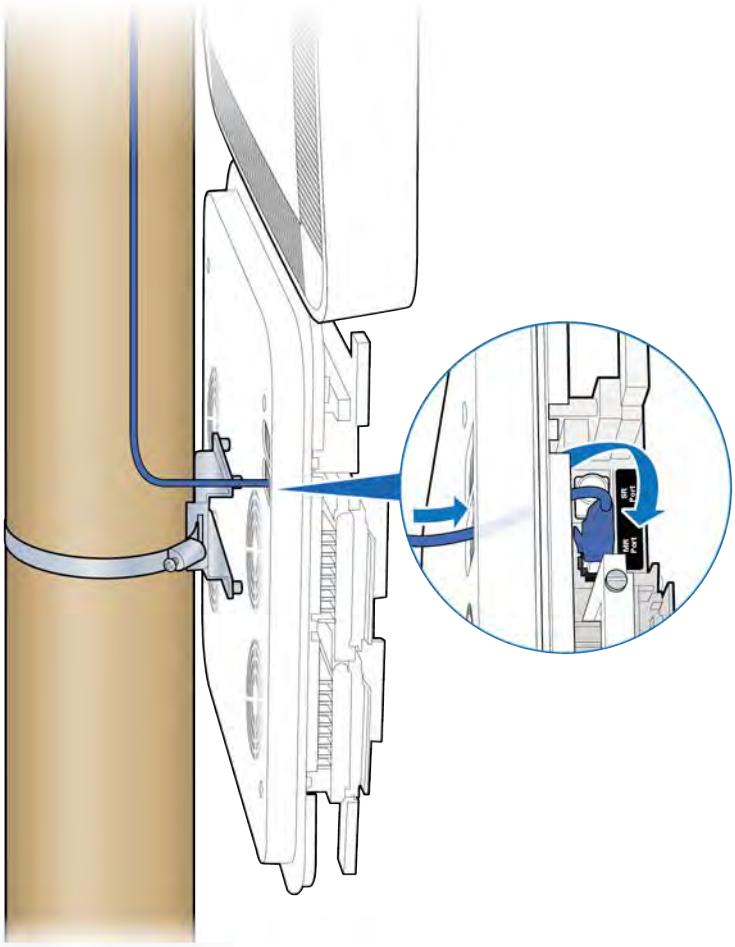

DRAFT

6 Replace the plastic cover on the Radio Point.

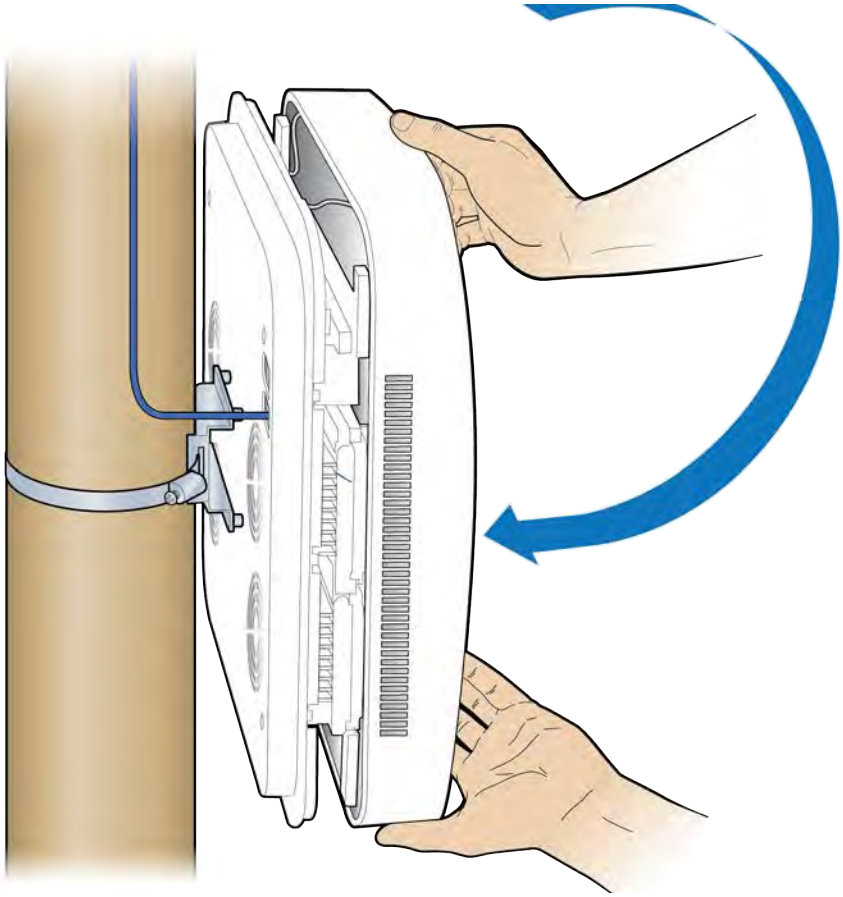

DRAFT

Installation is complete.

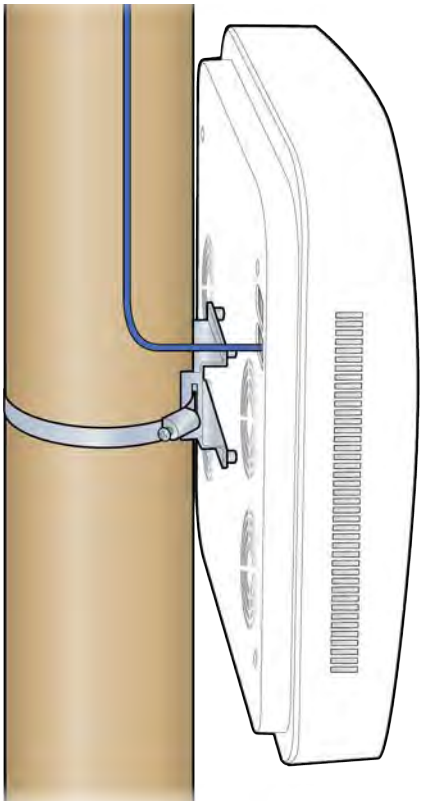

DRAFT

Chapter 5

RP5100r installation

This chapter describes installing Rugged Radio Points on poles and walls.

Rugged Radio Point installation overview	5-2
Pole mount installation	5-4
Wall mount installation	5-10

Rugged Radio Point installation overview

The Rugged Radio Point (RP) ships with the following hardware:

- Radio Point
- Mounting plate
- Mounting bolts (M8 Hex)
- RJ45, IP67 connector for CAT 6A cables

Figure 5-1. Hardware provided by CommScope

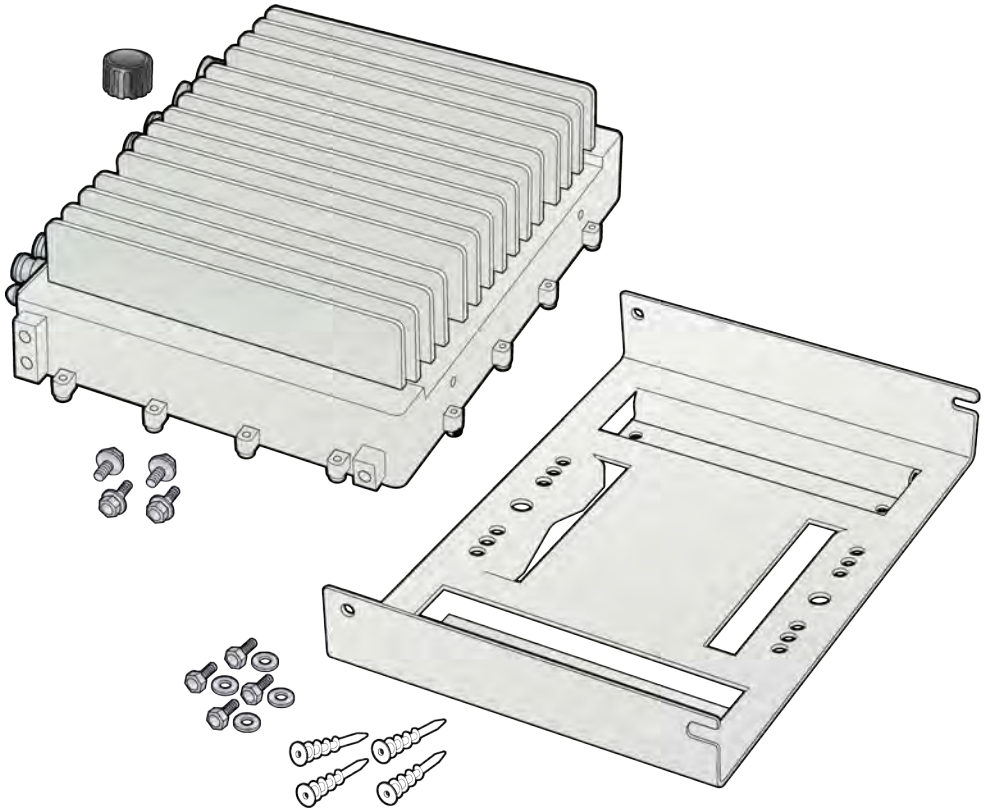

NOTE

An M8 hex wrench is required to install mounting bolts.

Mounting the Radio Point (RP) on a pole requires the following hardware provided by the system integrator:

- Two U bolts
- Four nuts

- RJ45, IP67 connector for CAT 5E
- Ethernet surge protector, as required by local code (for example, DTK-MRJPOEX or DTK-MRJPOES)

NOTE

If the MR port is connected to a switch that does not provide IEEE802.3bt, type-4 PoE power, the SR port can be used to provide power with a PoE++ injector. In this case, the installer needs to provide a CAT 5E – MPN 17-10044 connector (https://www.conec.com/catalog/en/rj45-stecker-set.html) to connect the RJ45 to the SR port. For more information, see *OneCell® Network Planning Guide, v4.5* (M0303A1).

Figure 5-2. Hardware provided by the systems integrator

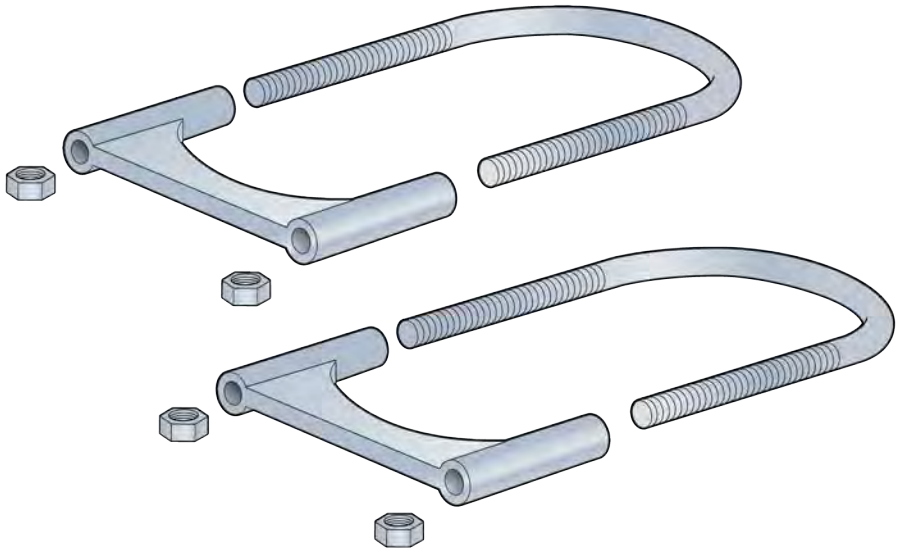

Mounting the Radio Point (RP) on a wall requires the following hardware provided by the system integrator:

- Four molly screws capable – 50 lb (23 kg) minimum rating

NOTE

Once the Radio Point is installed and the powered on, it may take up to 20 minutes for the frequency to stabilize and lock.

Before connecting the Ethernet cables to the RP, terminate the RP end of the Ethernet cable with the RJ45, IP67 connector.

Figure 5-3. RJ45, IP67 connector assembly

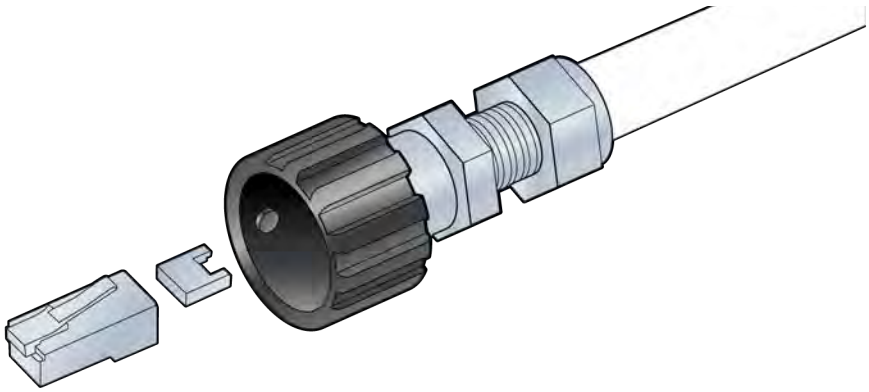

Pole mount installation

There is vertical orientation for pole mount installations

NOTE

The minimum pole diameter requirement is 4" (102mm).

Vertical pole mount

1. Slide the two U bolt clamps onto the pole and secure the RP mounting plate to the clamps with four nuts.

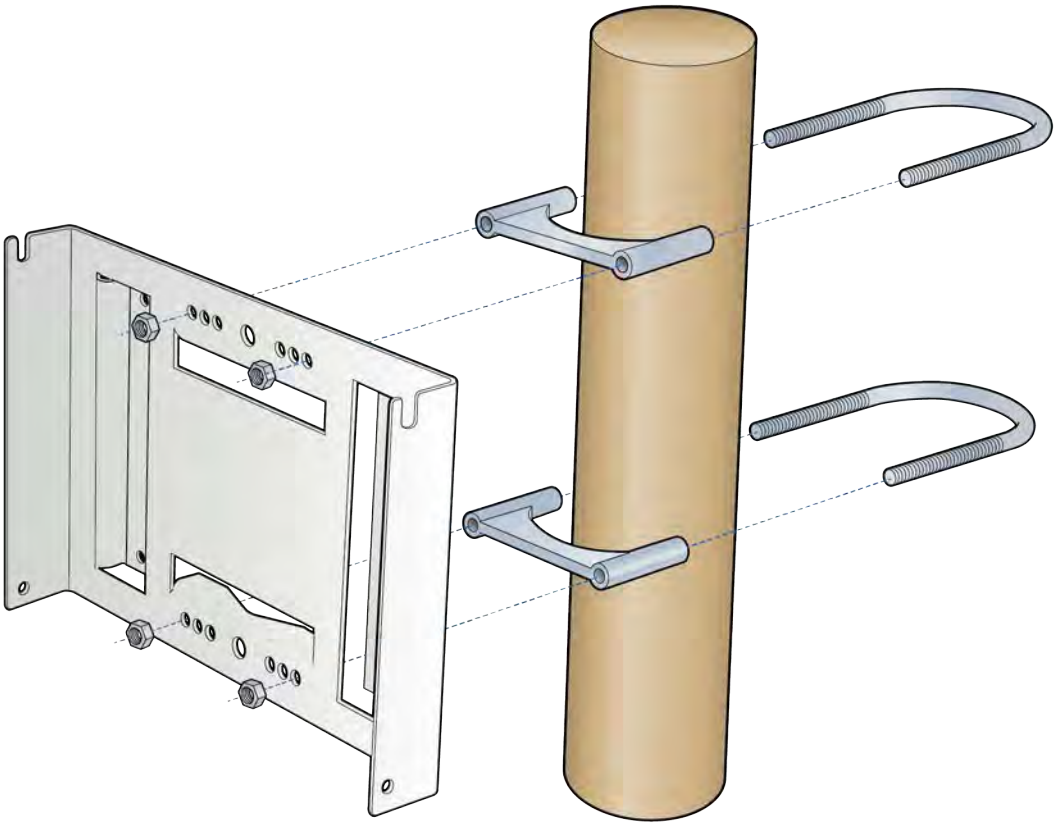

2 Insert two screws into the upper holes on opposite sides of the RP.

Required orientation is with connectors at the bottom of the RP

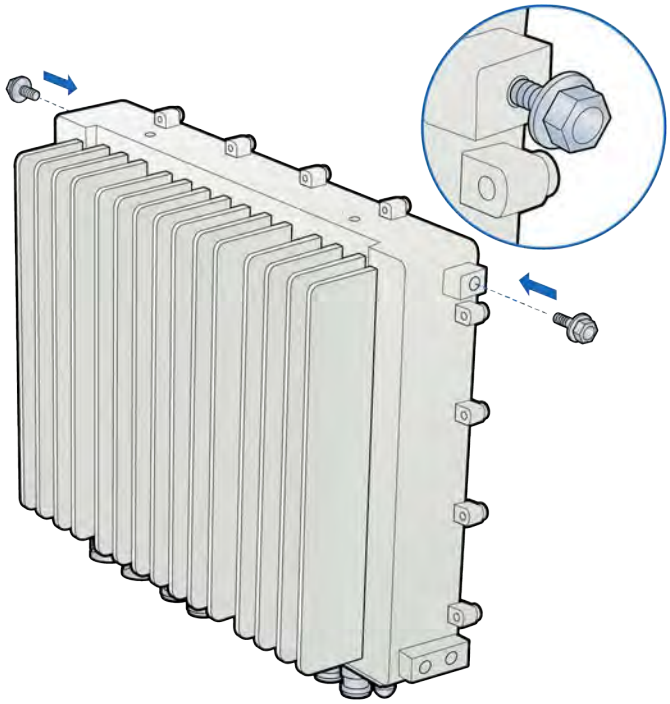

3 Hang the RP to the mounting bracket using the installed screws.

CAUTION

Ensure that the RP is oriented correctly with all connectors at the bottom of the RP.

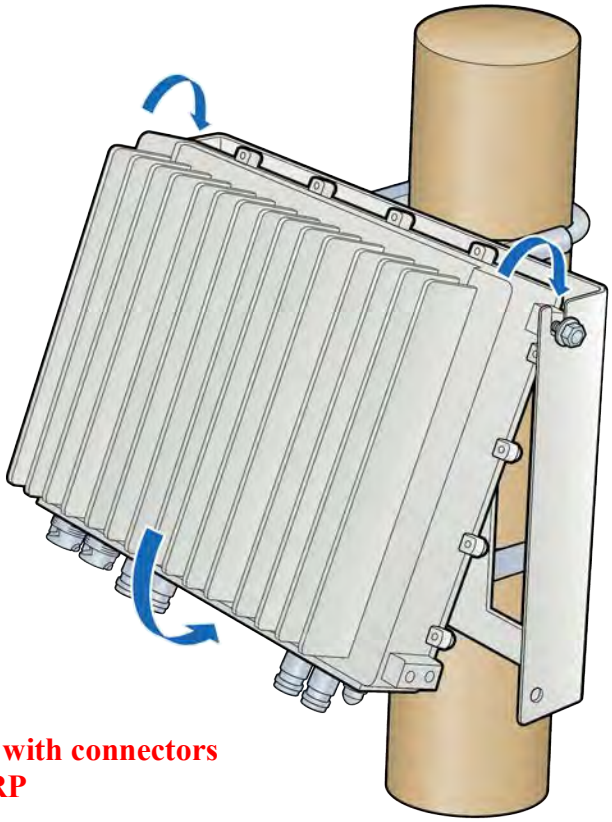

Required orientation with connectors at the bottom of the RP

4 Align holes at bottom location of bracket. Insert and tighten the bottom screws through the plate hole into both sides of the RP. Be sure that all four screws are tightened.

NOTE: The torque requirement for the mounting screws is 20-21 in-lbs.

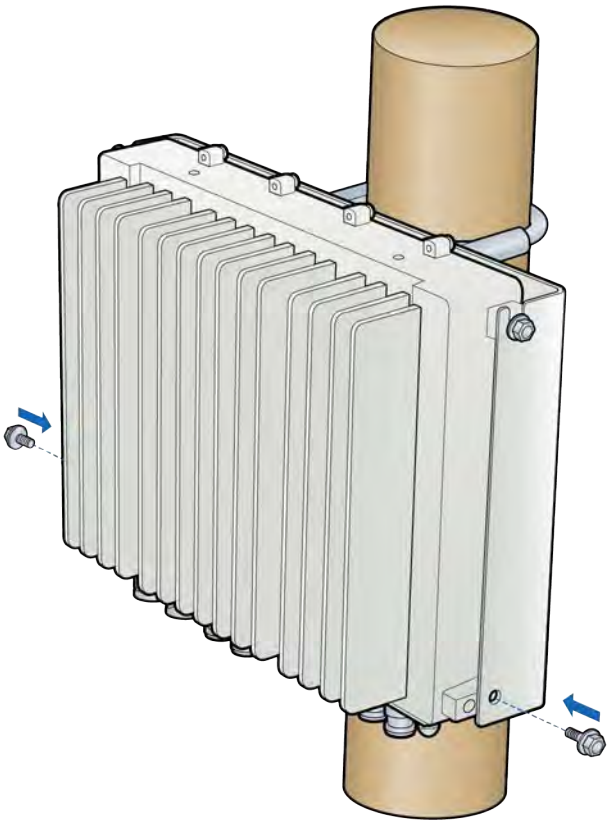

5 Connect the antenna cables on the bottom of the RP.

6 Connect the Ethernet cable RJ45 end to the bottom of the RP to the MR port.

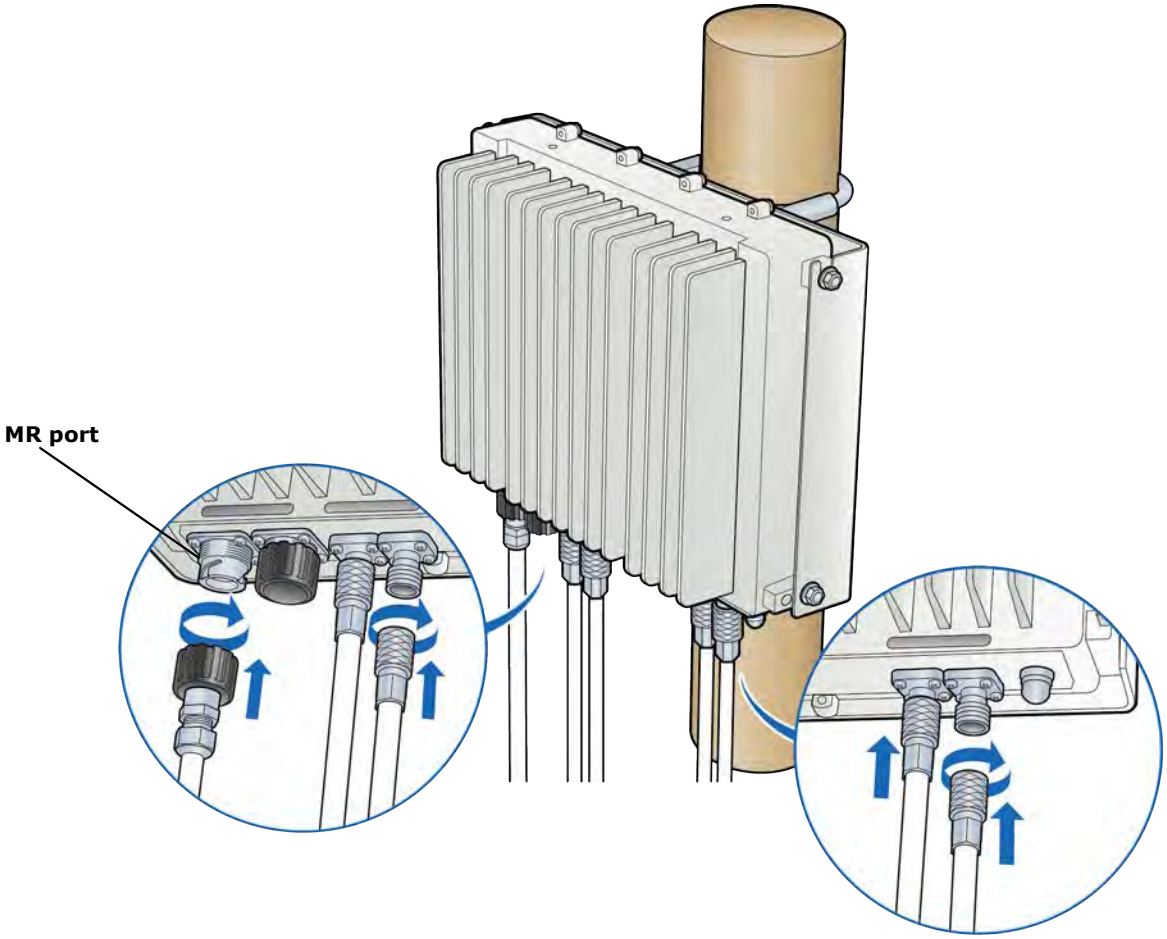

Wall mount installation

1 Drill four holes in the wall using the mounting plate to determine the hole locations. Mount the backplate on the wall with four molly screws.

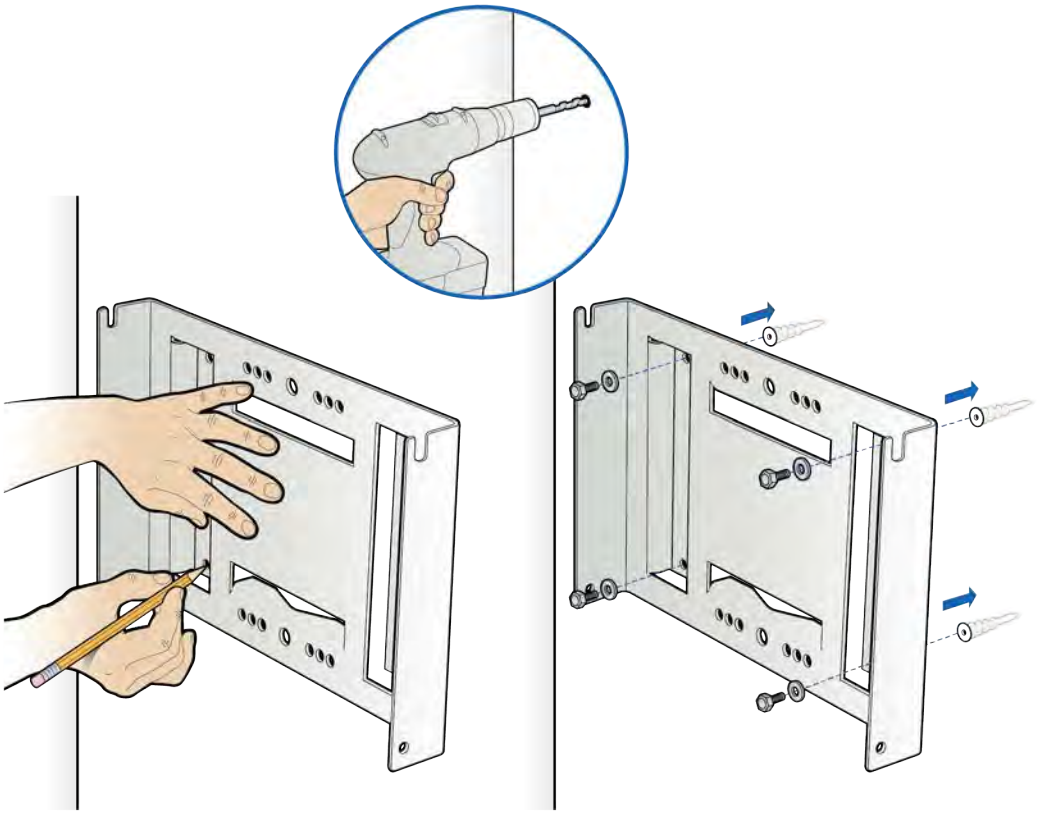

2 Insert two screws into the upper holes on opposite sides of the RP as shown in the drawing below.

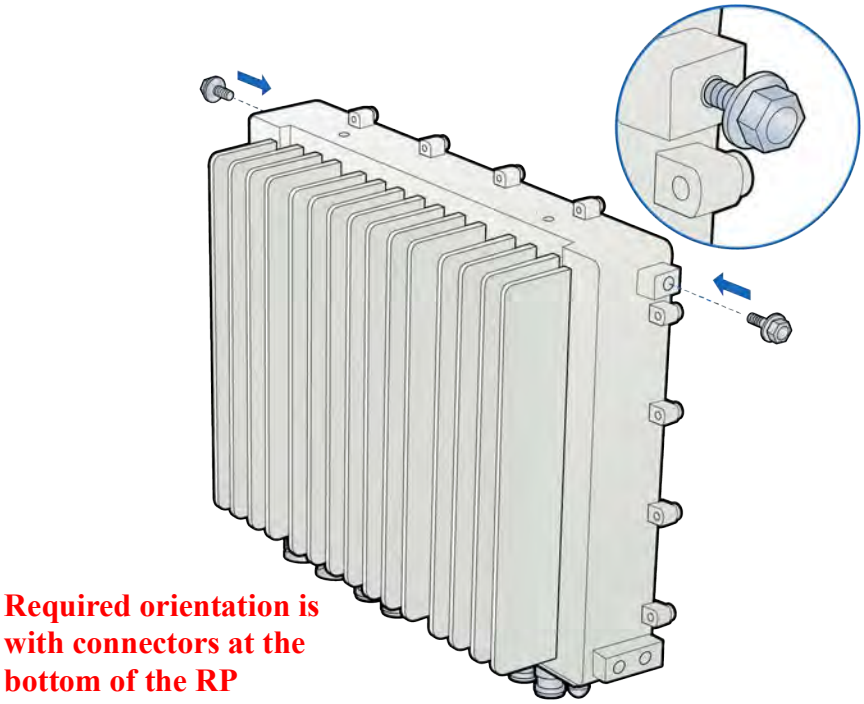

3 Attach the RP to the mounting plate.

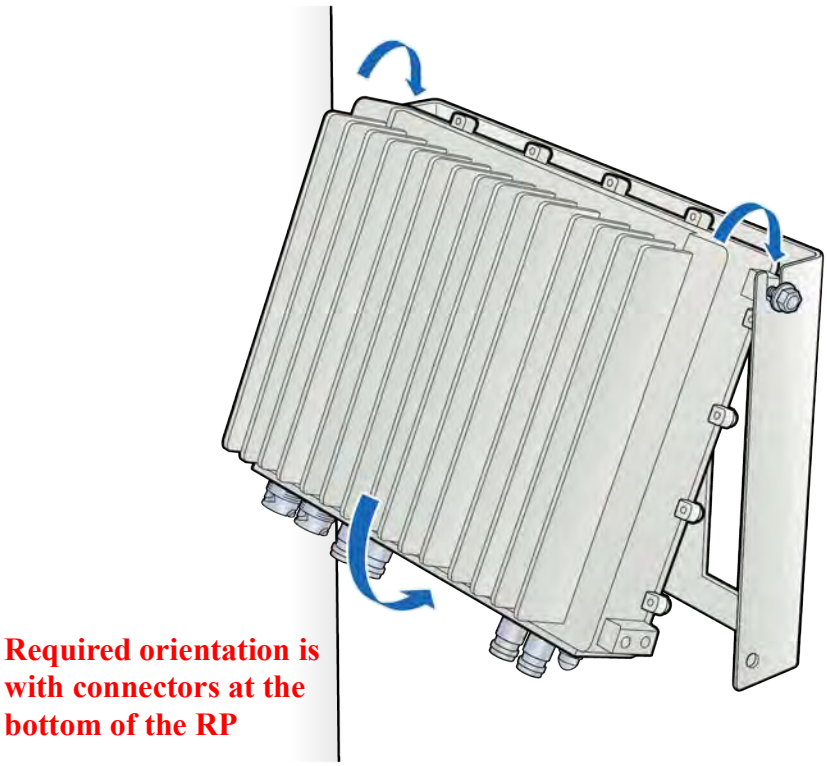

4 Tighten the top screws on the RP and insert and tighten the bottom screws on the RP.

NOTE: The torque requirement for the mounting screws is 20-21 in-lbs.

5 Insert and tighten the bottom screws through the plate hole into both sides of the RP.

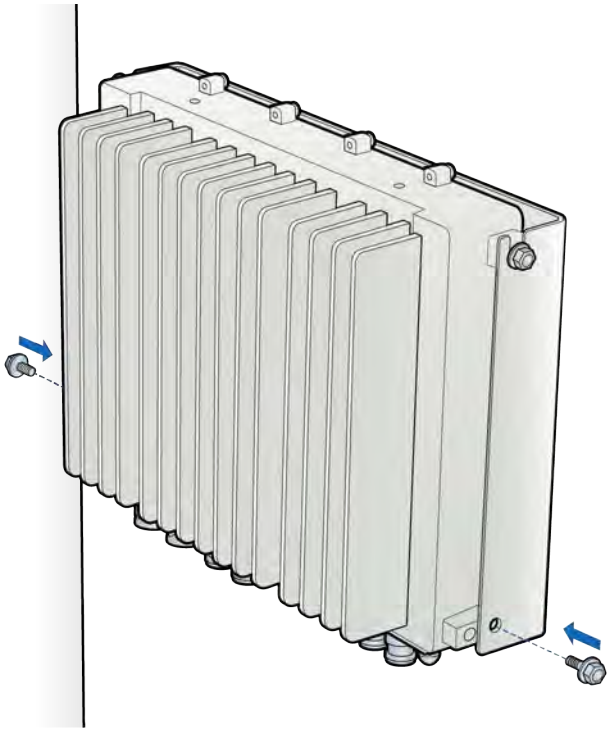

6 Connect the antenna cables on the bottom of the RP.

7 Connect the Ethernet cable RJ45 end to the bottom of the RP to the MR port.

NOTE: Insert the Ethernet surge protection as required by local code (for example, DTK-MRJPOEX or DTK-MRJPOES).

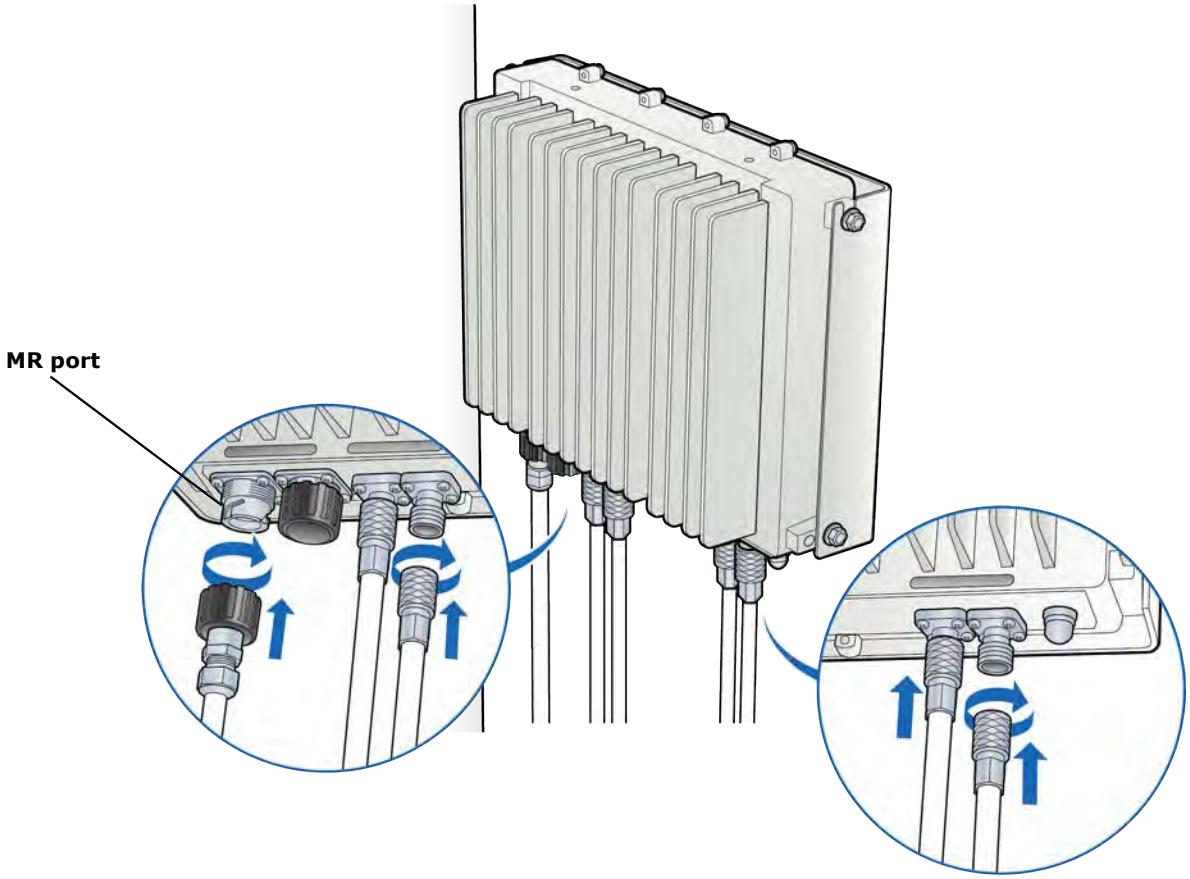

Chapter 6

RP2000 Installation

This chapter describes installing indoor Radio Points on ceiling tiles, above ceiling tiles, on poles and in a flown configuration.

Indoor Radio Point (RP2000) installation overview	6-2
Ceiling mount	6-3
Flown mount	6-17
Pole mount	6-23

DRAFT

Indoor Radio Point (RP2000) installation overview

There are four configurations for installing the Radio Point, which are dependent on the ceiling type.

- Ceiling mount, on tile
- Ceiling mount, above tile
- Flown mount
- Pole mount

NOTE

Once the Radio Point is installed and the powered on, it may take up to 20 minutes for the frequency to stabilize and lock.

DRAFT

Ceiling mount

Mounting the Radio Point (RP) above or on the ceiling tile requires the following hardware provided by CommScope:

- Radio Point mounting plate and 4 screws
- Octagon box mounting plate and 2 screws
- 4" octagon box, 1-1/2" deep with 1/2" side cutouts
- Clamp with screw - not required for flown mount option

Figure 6-1. CommScope ceiling mount kit contents

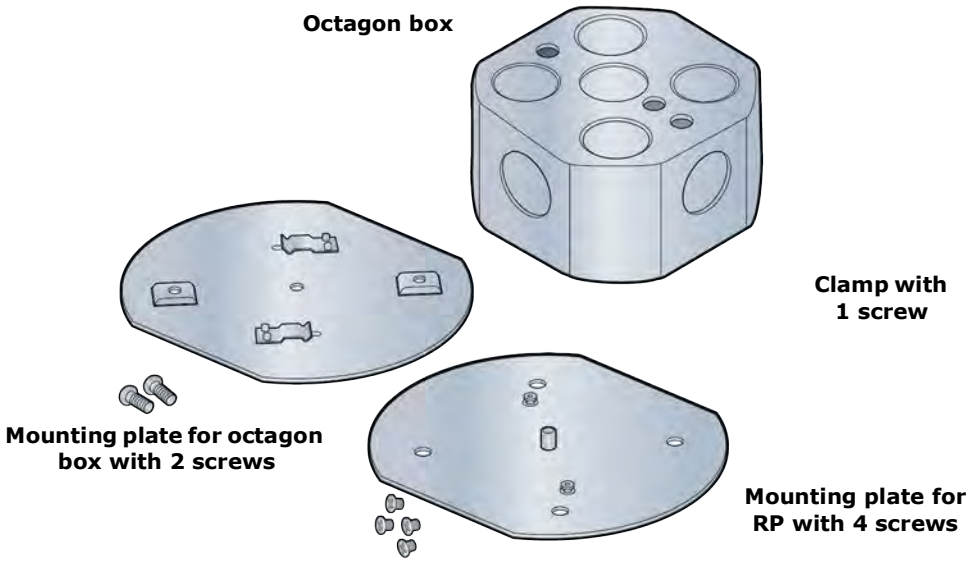

DRAFT

Mounting the Radio Point (RP) above or on the ceiling tile requires the following hardware provided by the systems integrator:

- Drop rail – Eaton B-line BA50 recommended

Figure 6-2. Drop rail, system integrator-provided

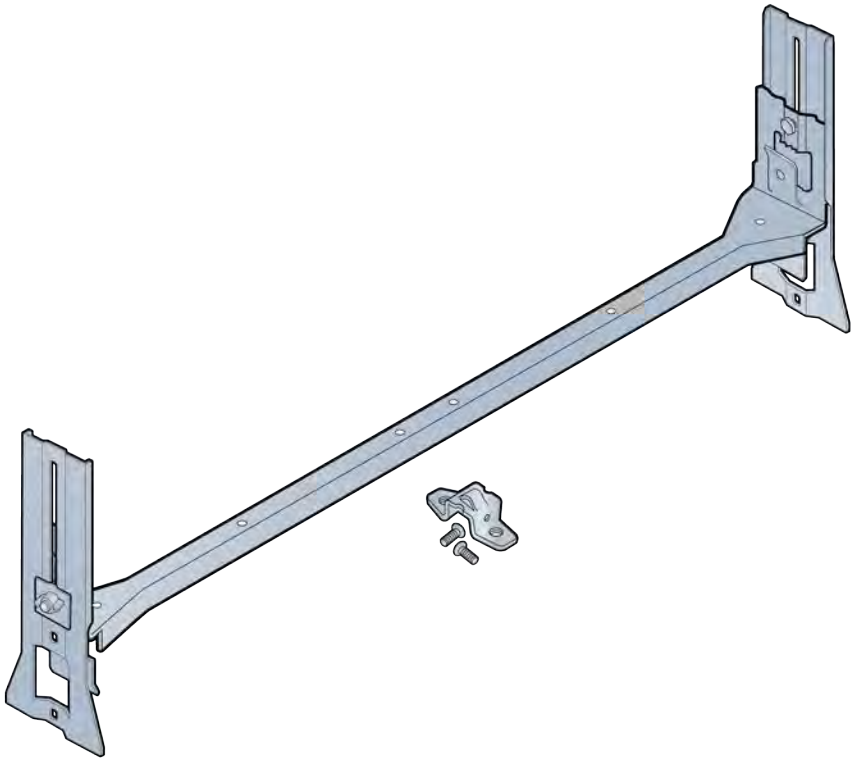

DRAFT

Mounting the Radio Point on the ceiling tile

1 Remove two ceiling tiles from the overhead.

2 Place the octagon box on the tile and trace the outline. Cut the opening.

DRAFT

3 Drill a 1/2-inch diameter hole for the Ethernet cable pass-through.

NOTE: Use a 1-1/2 deep RACO 8125 or equivalent.

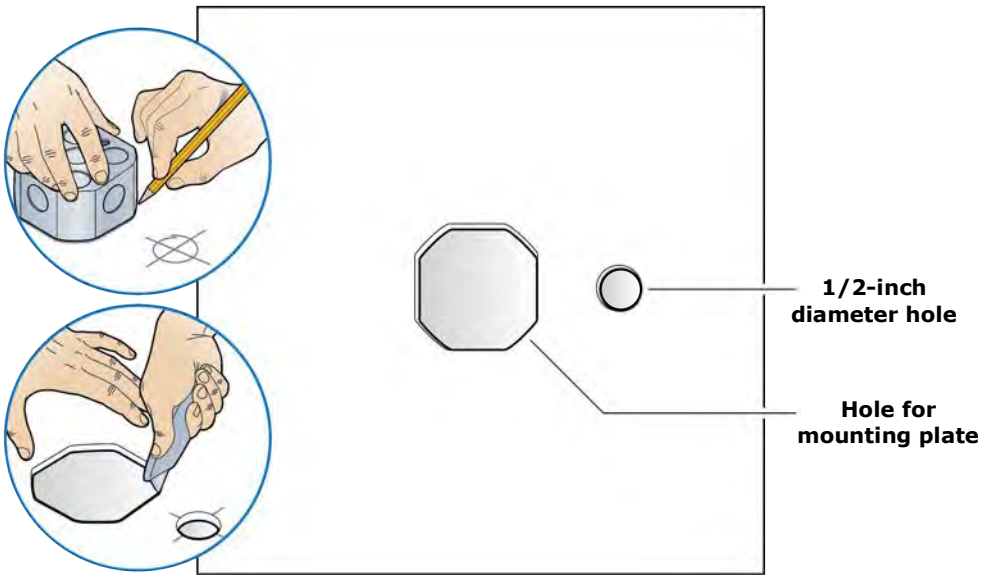

4 Attach the octagon box to the ceiling bracket using a clamp and screw.

NOTE: CommScope recommends the Eaton B-line – BA50 bracket.

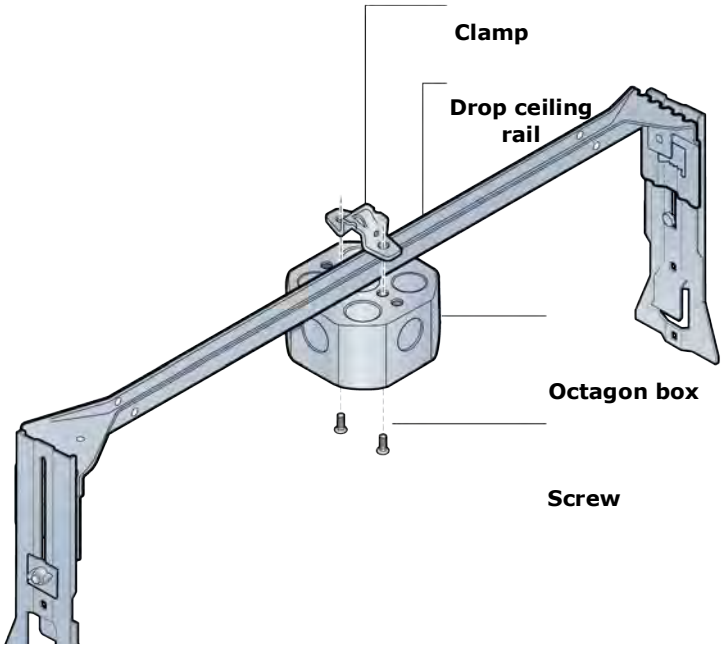

DRAFT

5 Replace the ceiling tile with the cutouts.

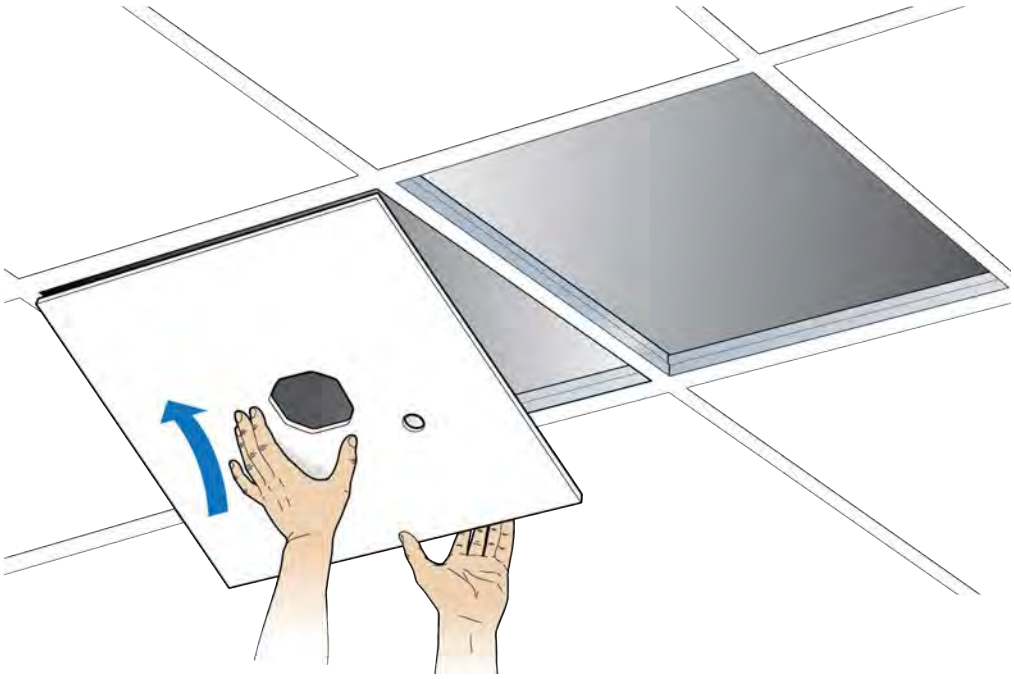

DRAFT

6 Install the drop rail assembly over the ceiling tile with the cutouts.

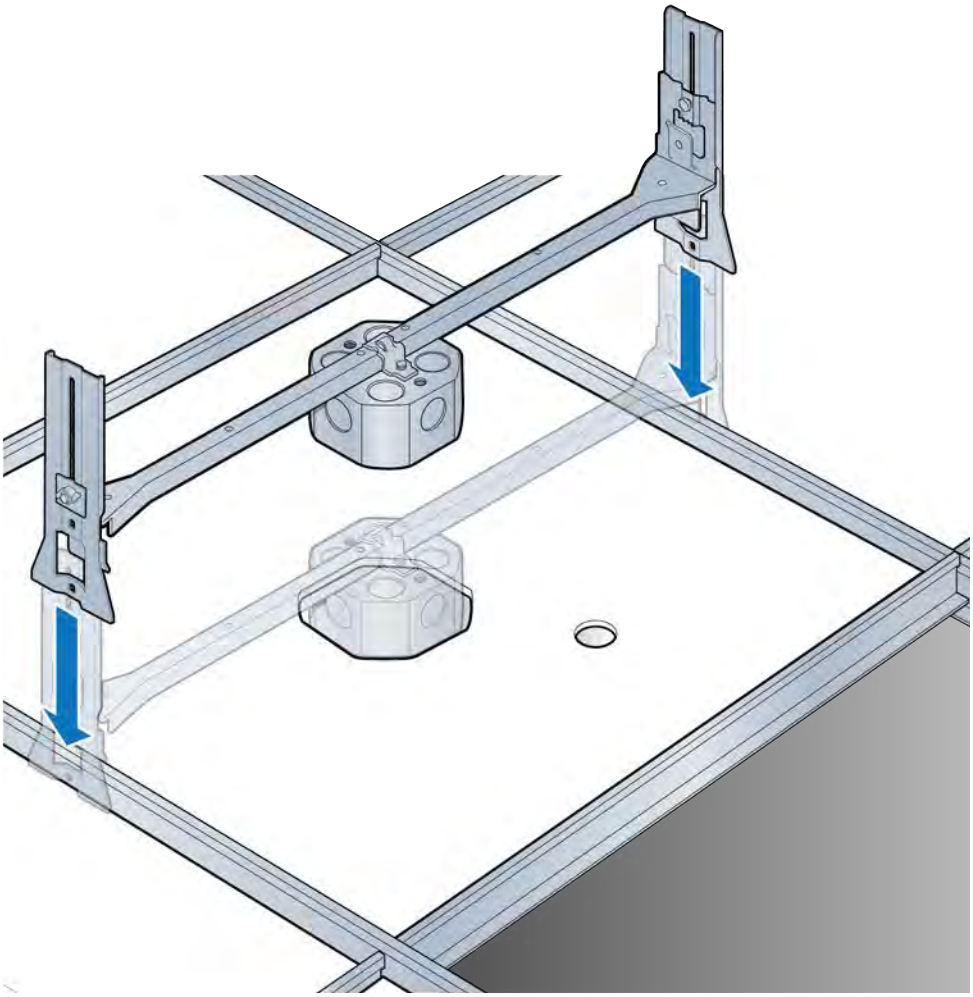

DRAFT

7 Attach the mounting plate onto the octagon box.

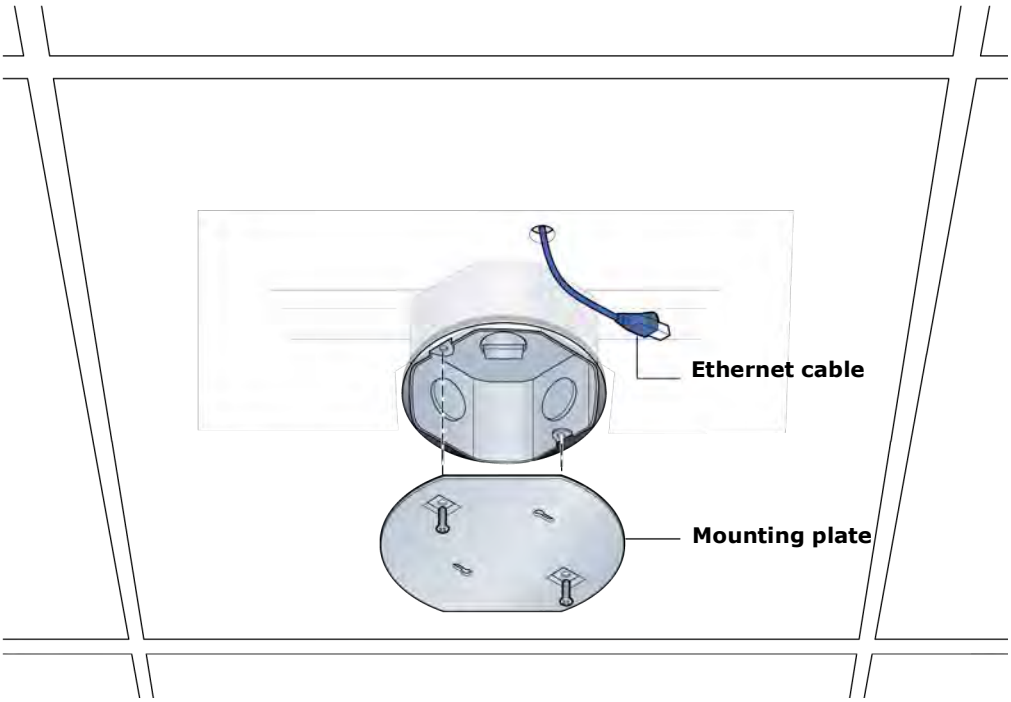

8 Attach base plate to the Radio Point.

NOTE: Apply thread locking compound to screws prior to installation.

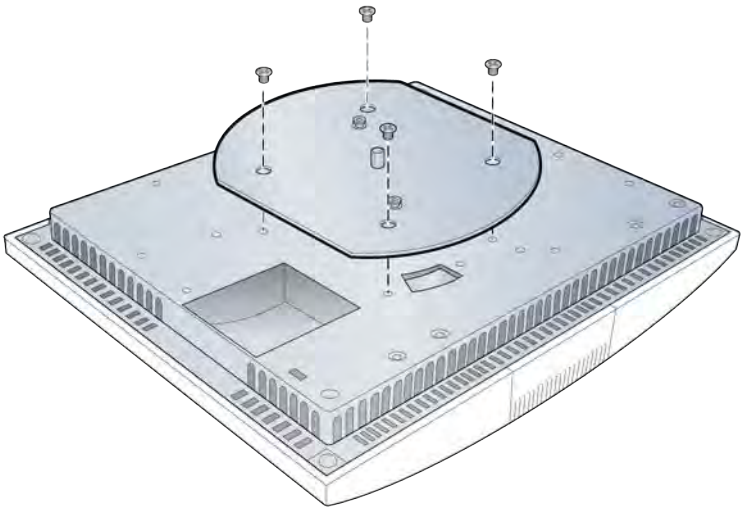

DRAFT

9 Mount the Radio Point to the octagon box plate.

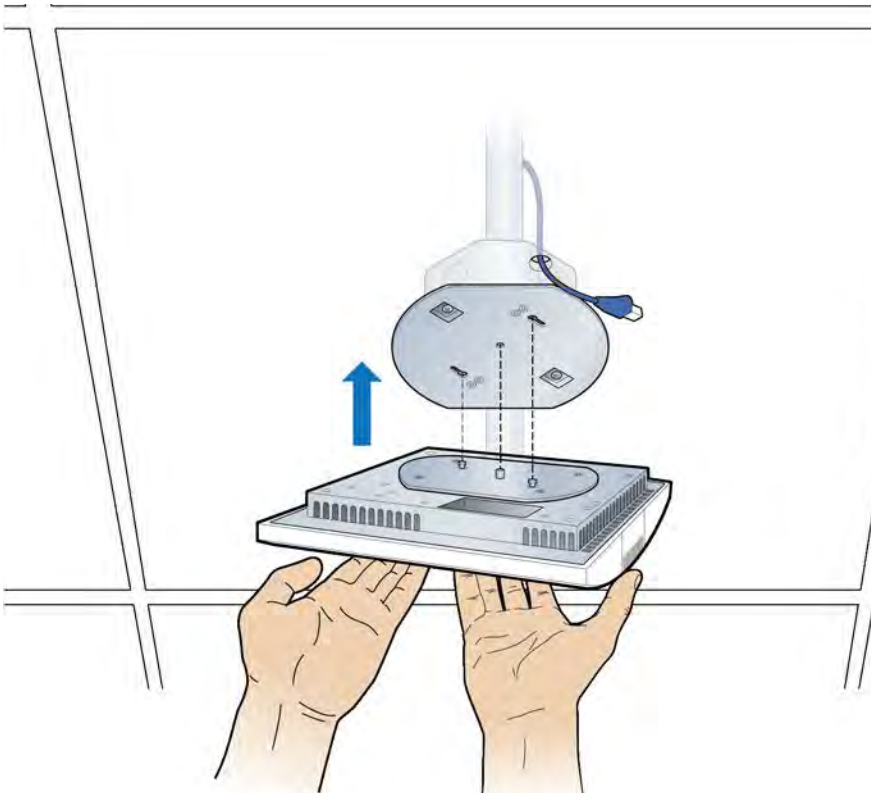

10 Secure the Radio Point.

DRAFT

11 Connect the Ethernet cable to the Radio Point.

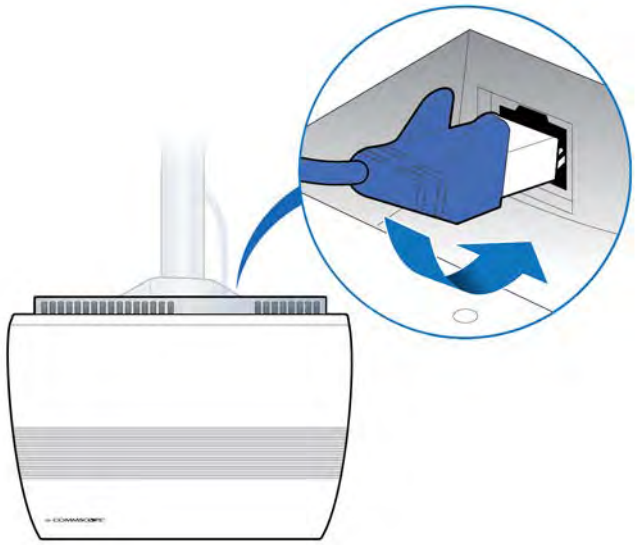

12 Replace the second ceiling tile.

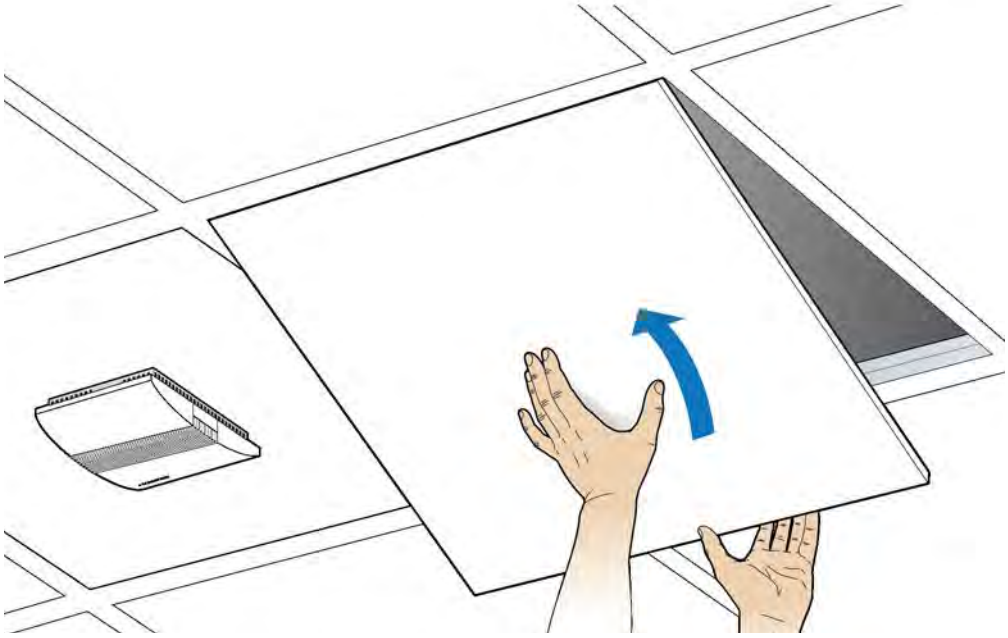

DRAFT

Installation is complete.

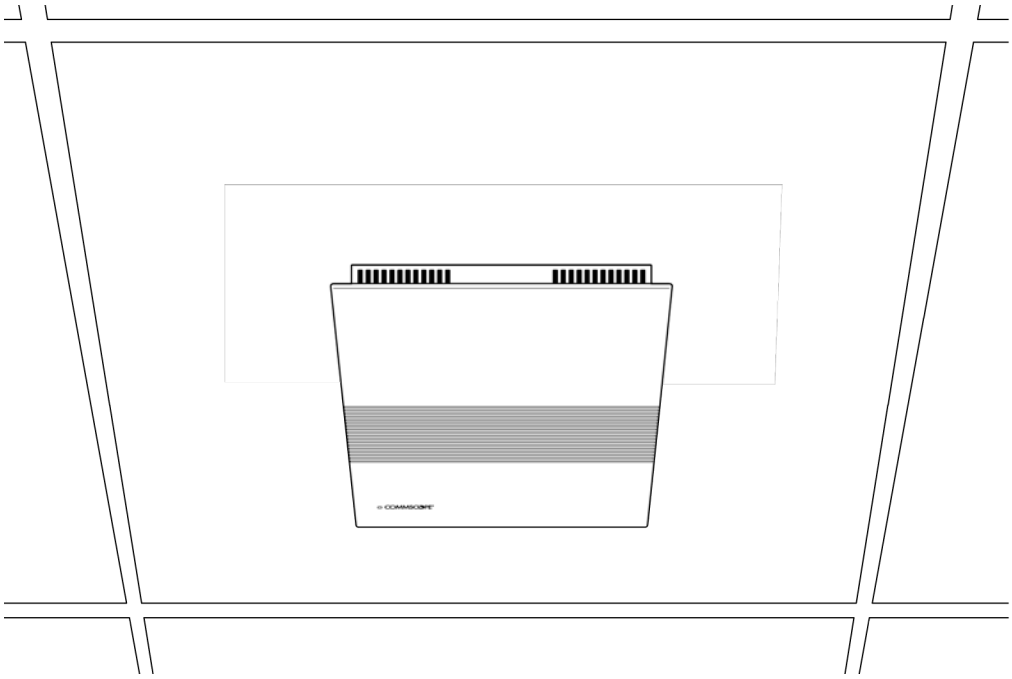

DRAFT

Mounting the Radio Point above the ceiling tile

1 Remove ceiling tile from the overhead.

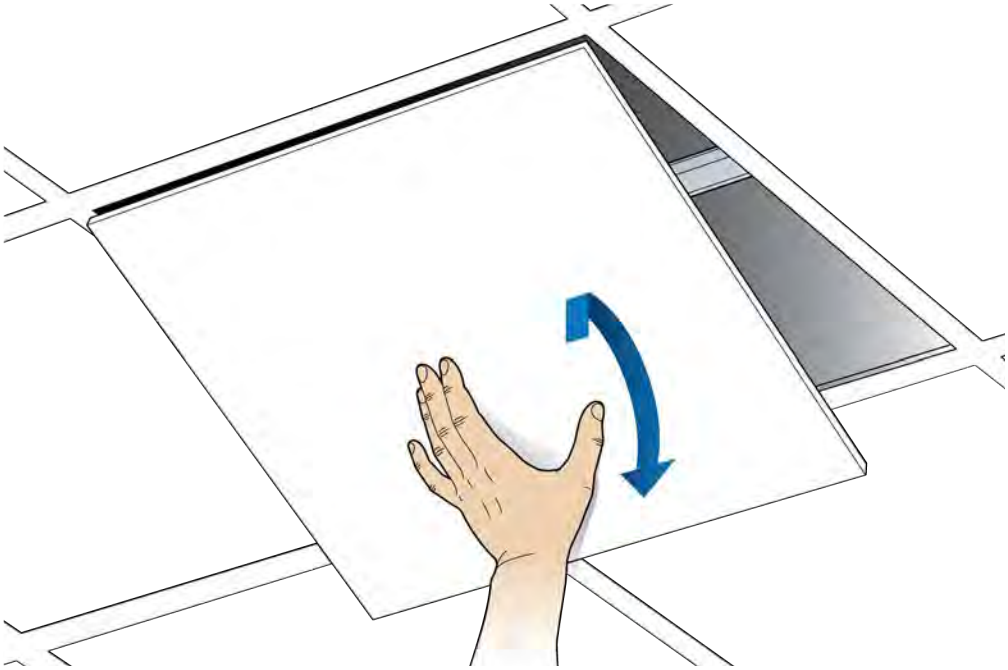

2 Attach the octagon box to the bracket.

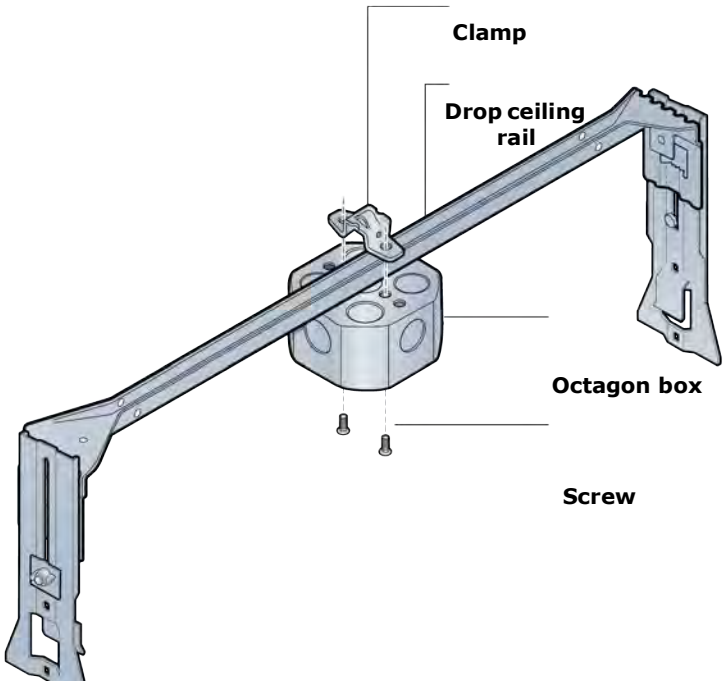

DRAFT

3 Attach the mounting plate to the Radio Point.

NOTE: Apply thread locking compound to screws prior to installation.

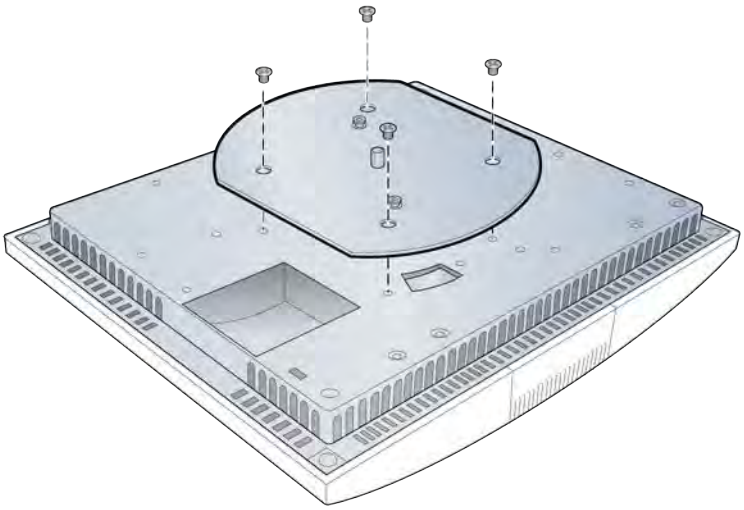

4 Attach the Radio Point to the octagon box.

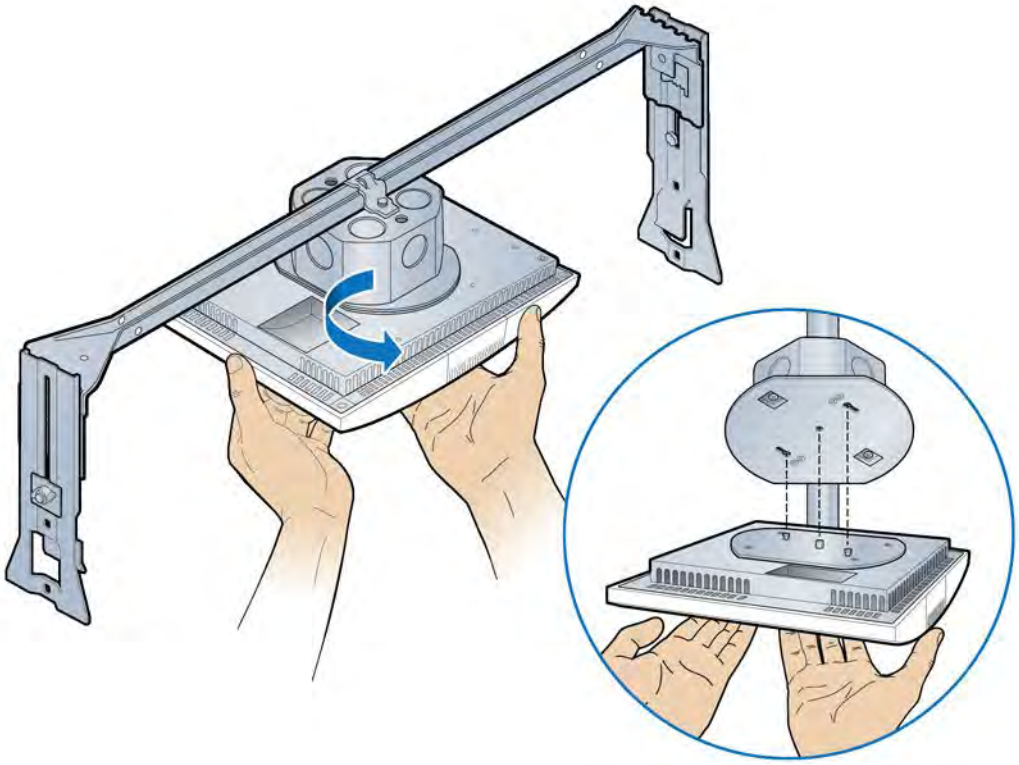

DRAFT

5 Install the drop rail assembly to the ceiling tile rail.

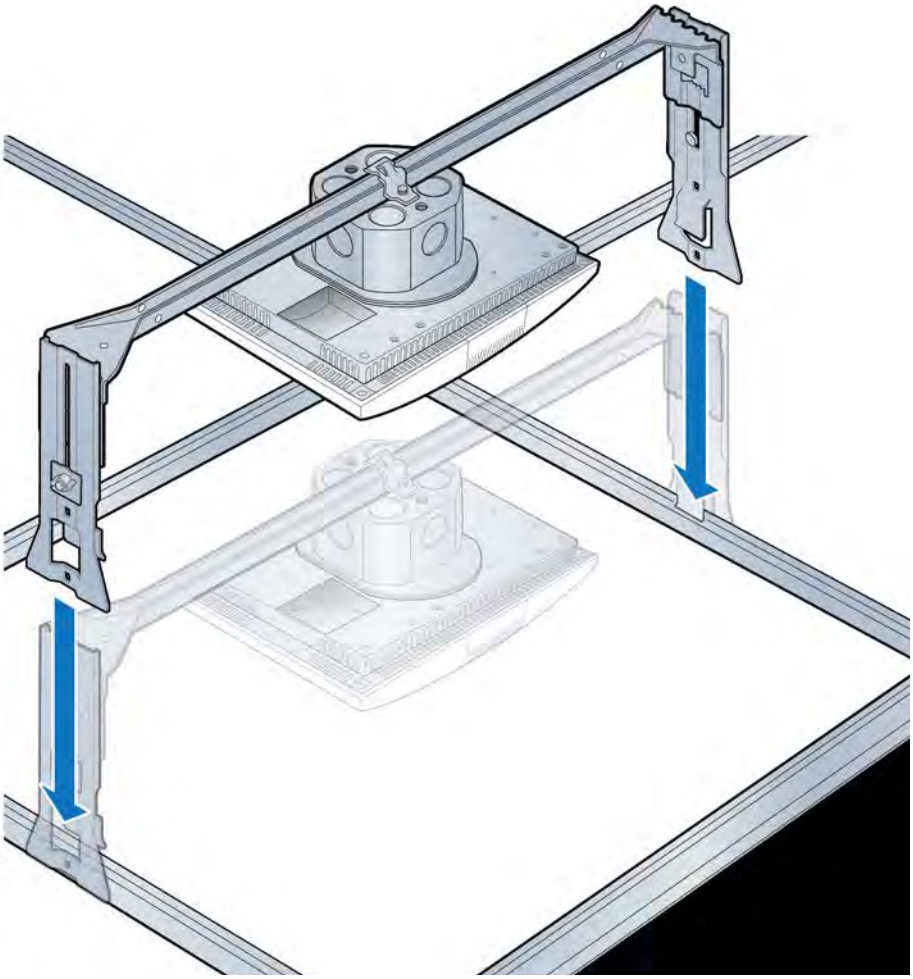

NOTE: The minimum clearance for cooling is 3 inches.

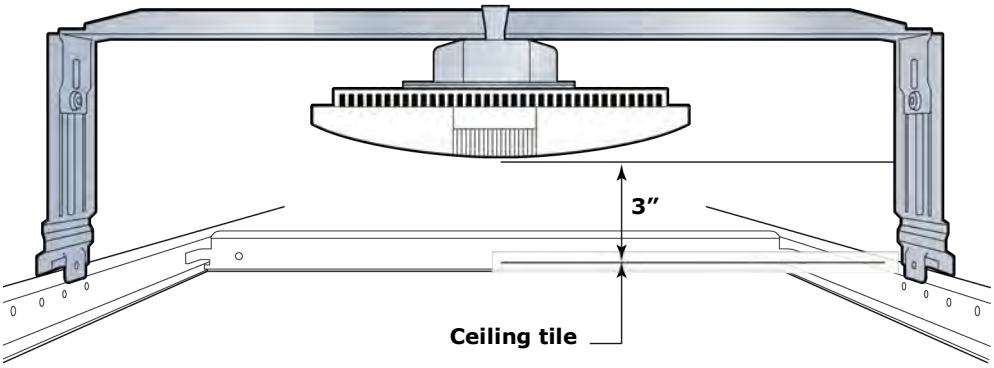

DRAFT

6 Connect Ethernet cable to RP.

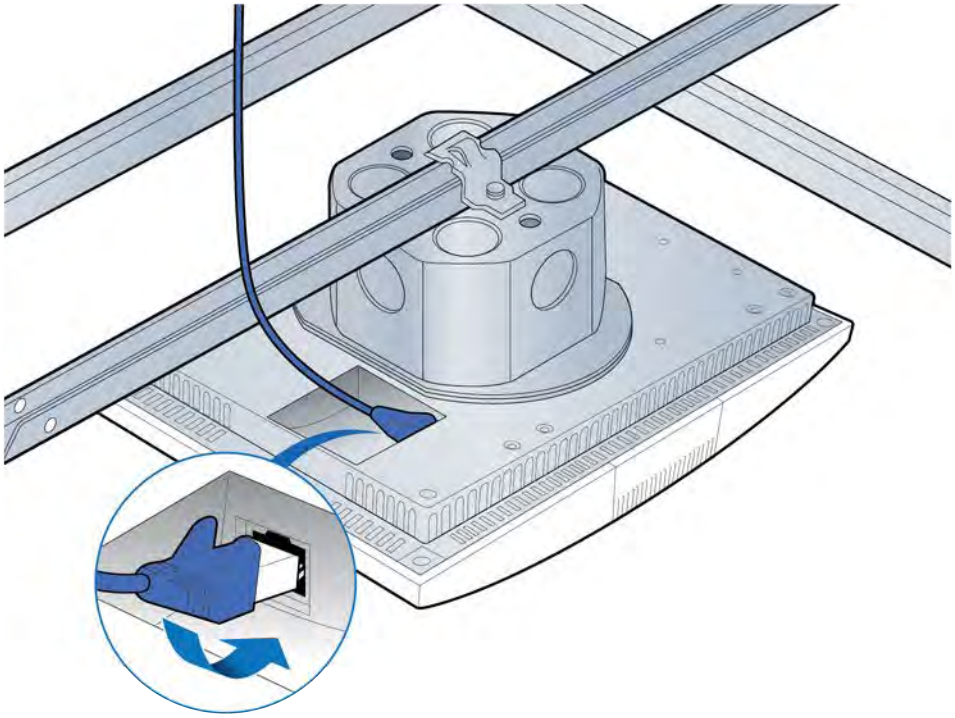

7 Replace the ceiling tile.

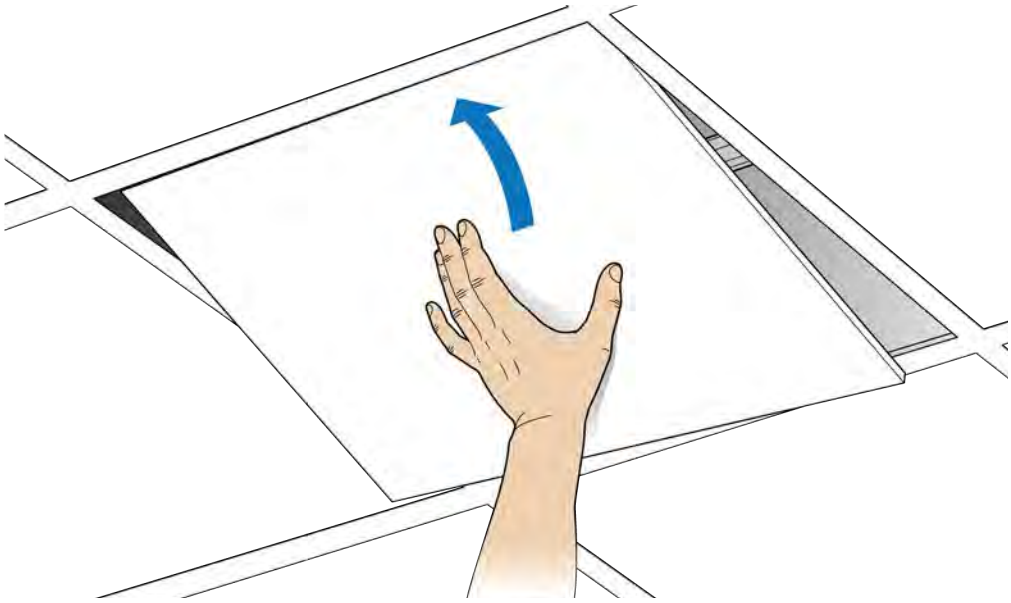

DRAFT

Flown mount

The Radio Point can be flown mounted on the end of a rod. This configuration is used for buildings where there are no drop ceilings.

Mounting the Radio Point (RP) in the flown configuration requires the hardware listed in Indoor Radio Point (RP2000) installation overview on page 6-2

Figure 6-3. CommScope supplied kit contents

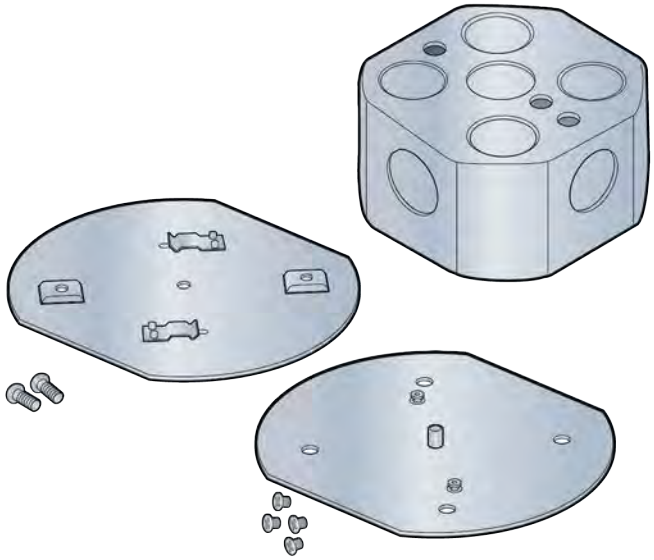

Mounting the Radio Point (RP) in the flown configuration requires the following hardware provided by the system integrator:

- Rod, 3/8-inch threaded
- 2 flat washers
- Nut
- Lock nut, nylon

DRAFT

Flown mount installation

1. Attach the threaded, 3/8-inch rod, cut to the required length, to the ceiling.
2. Install the nut and a flat washer on the rod.
3. Slide the octagon box onto the rod and install a flat washer and the nylon lock nut.

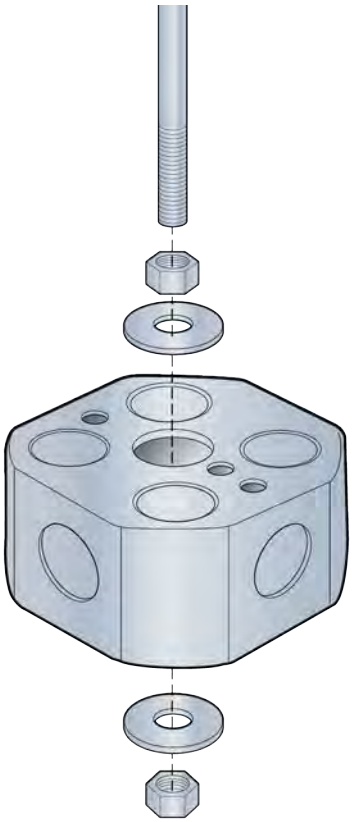

DRAFT

4 Attach the plate with two screws to the octagon box.

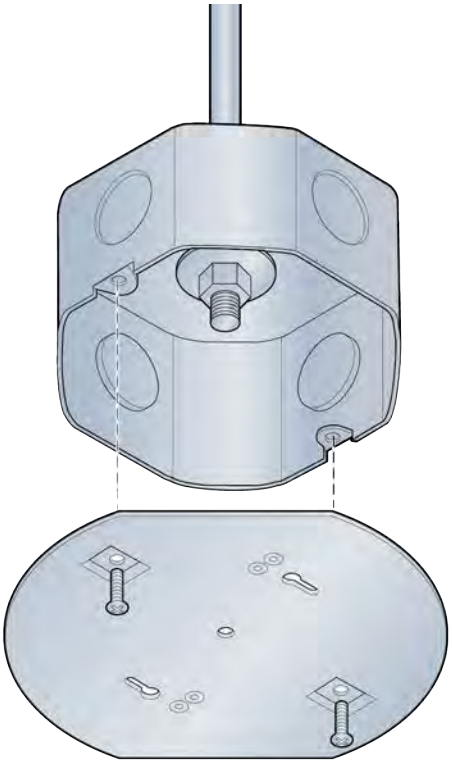

5 Attach the CommScope supplied mounting plate to the Radio Point with four screws.

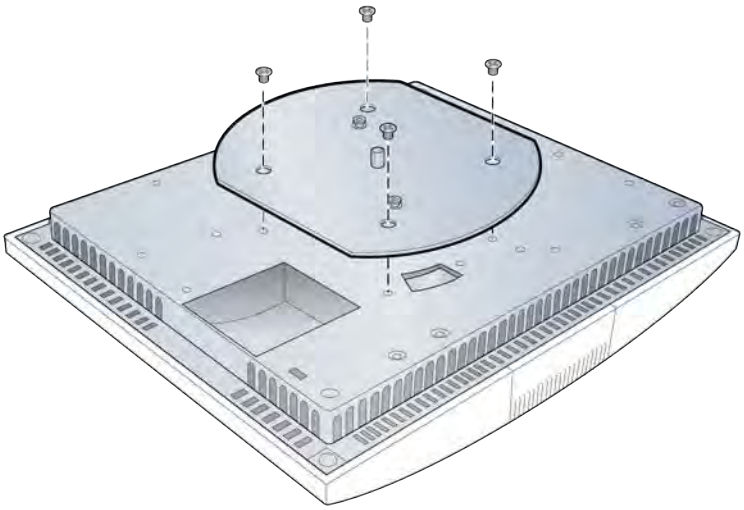

DRAFT

6 Attach the Radio Point to the octagon box.

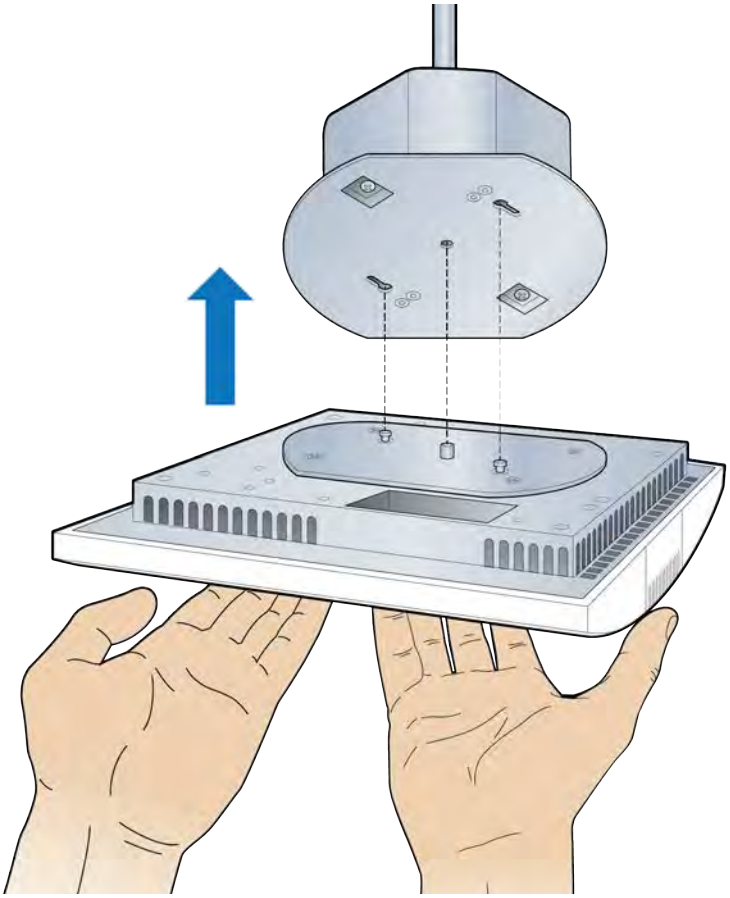

DRAFT

7 Secure the Radio Point to the octagon box plate.

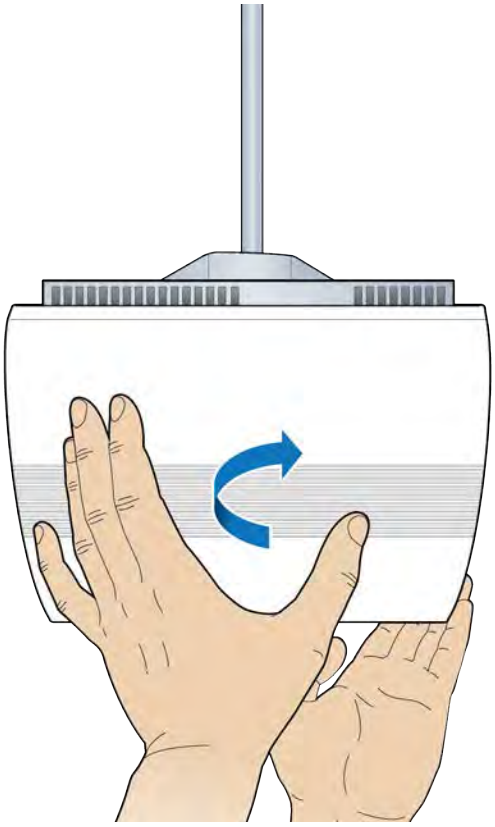

DRAFT

8 Connect the Ethernet cable to the Radio Point.

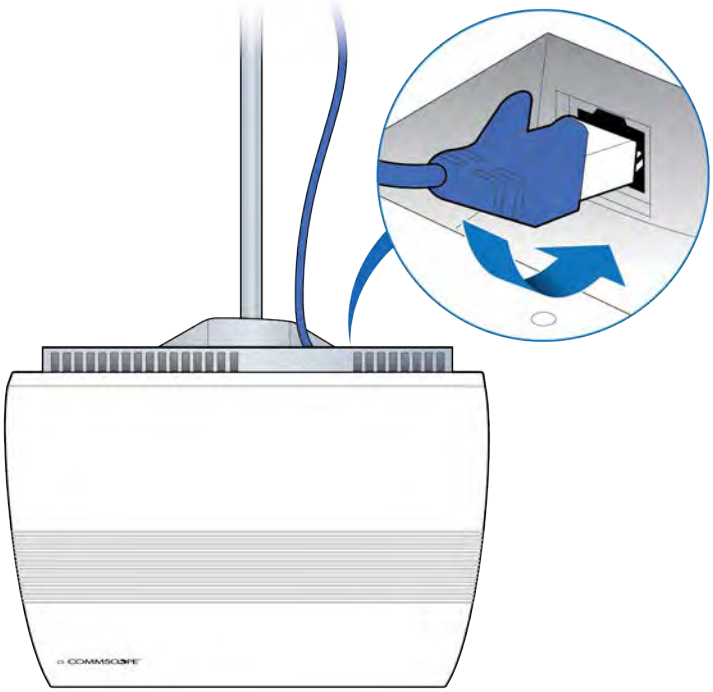

Installation is complete.

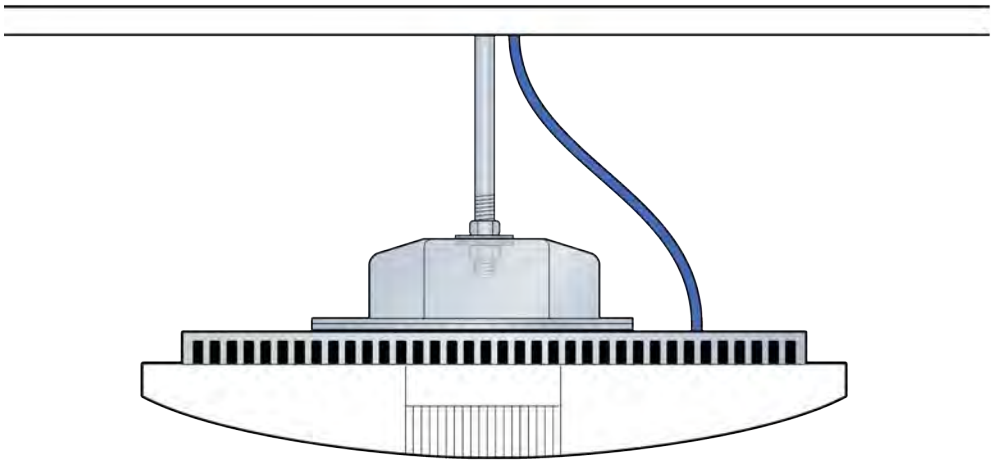

DRAFT

Pole mount

The Radio Point can be pole mounted. This configuration is used for building where there are no drop ceilings.

Mounting the Radio Point (RP) on a pole requires the following hardware provided by CommScope in the mounting kit:

- Mounting bracket
- 4 screws

Figure 6-4. Mounting bracket kit contents

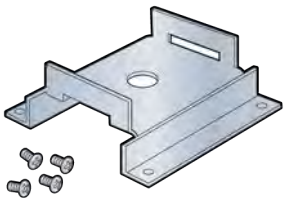

Mounting the Radio Point (RP) on a pole requires the following hardware provided by the system integrator:

- Adjustable clamp at least 2 inches larger than the circumference of the pole

Pole mount installation

1 Attach the bracket to the Radio point.

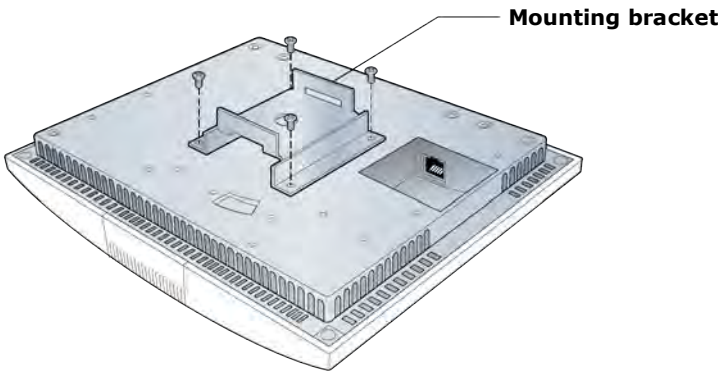

DRAFT

2 Slide the adjustable clamp through the slots on the Radio Point bracket.

3 Wrap the clamp around the pole and tighten the clamp screw to secure the Radio Point to the pole.

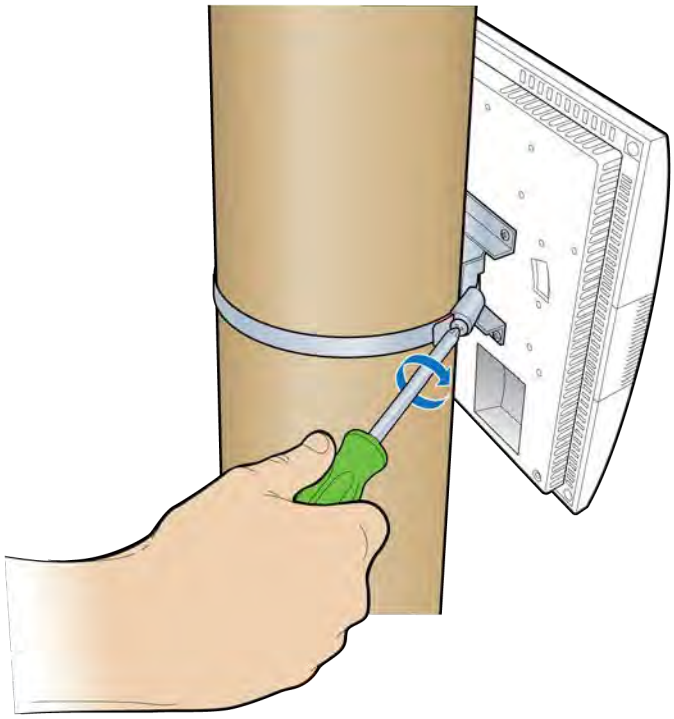

4 Connect the Ethernet cable to the Radio Point.

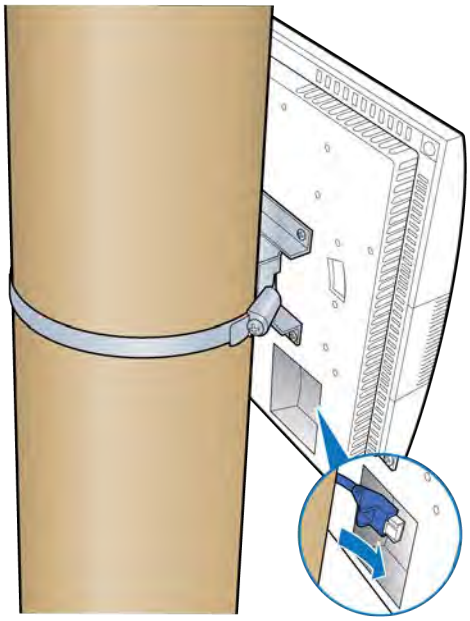

DRAFT

Installation is complete.

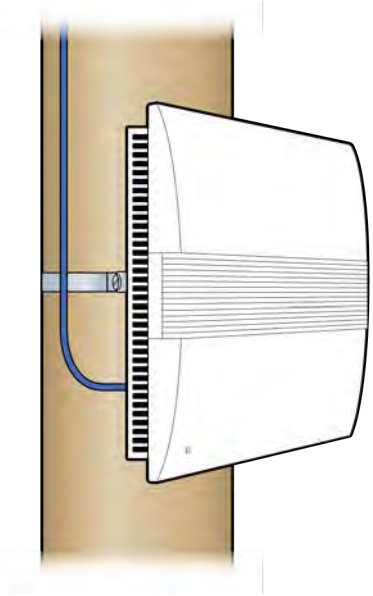

DRAFT

DRAFT

Chapter 7

RP2100 Installation

This chapter describes installing Rugged Radio Points on poles and walls.

Rugged Radio Point (RP2100) installation overview	7-2
Pole mount installation	7-4
Wall mount installation	7-17

DRAFT

Rugged Radio Point (RP2100) installation overview

The Rugged Radio Point (RP) ships with the following hardware:

- Radio Point
- Mounting plate
- Mounting brackets
- Four tamper-resistant mounting screws (M5)
- RJ45, IP67 connector
- Two 4.3-10 antenna couplers

NOTE

A tamper-resistant T25 Torx bit, 1/4" hex shank, attached to a driver handle, is required to secure the tamper-resistant mounting screws.

Mounting the Radio Point (RP) on a pole requires the following hardware provided by the system integrator:

- Two adjustable clamps

DRAFT

Mounting the Radio Point (RP) on a wall requires the following hardware provided by the system integrator:

- Four molly screws capable – 50 lb (23 kg) minimum rating

Before installing the RP on the pole, terminate the RP end of the Ethernet cable with the RJ45, IP67 connector provided in the box.

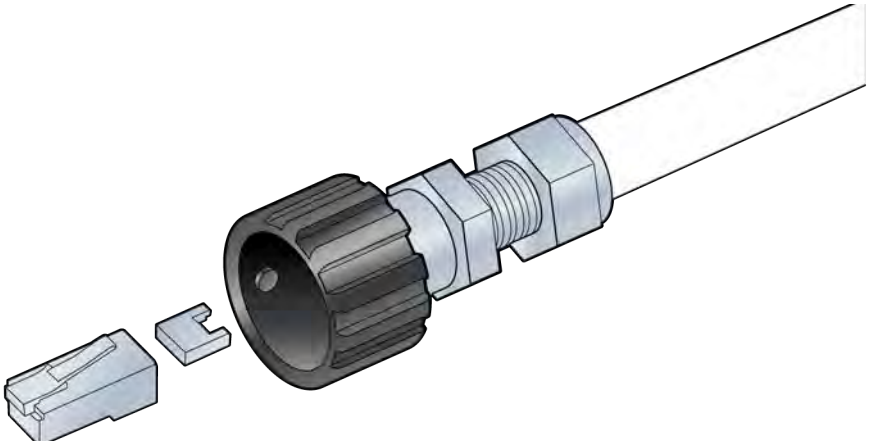

NOTE

Once the Radio Point is installed and the powered on, it may take up to 20 minutes for the frequency to stabilize and lock.

DRAFT

Pole mount installation

There are two orientations for pole mount installations:

- Vertical pole mount
- Horizontal pole mount

NOTE

The minimum pole diameter requirement is 4" (102mm).

Vertical pole mount

1. Attach mounting brackets to mounting plate.

   NOTE: The torque requirement for the bracket mounting screws is 5-6 in-lbs.

2. Slide the adjustable clamp through the slots on each RP mounting bracket on the RP plate.

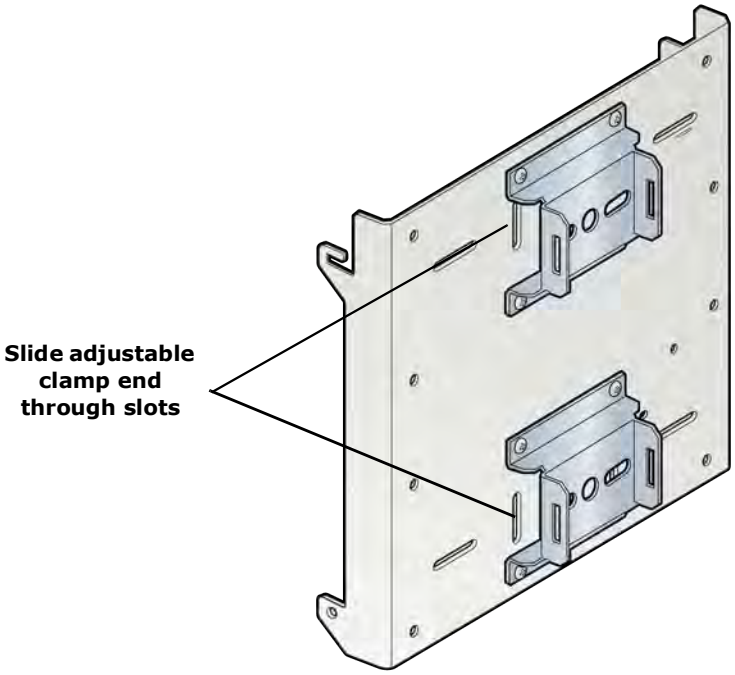

DRAFT

3 Wrap each clamp around the pole and tighten the clamp screw to secure the RP to the pole.

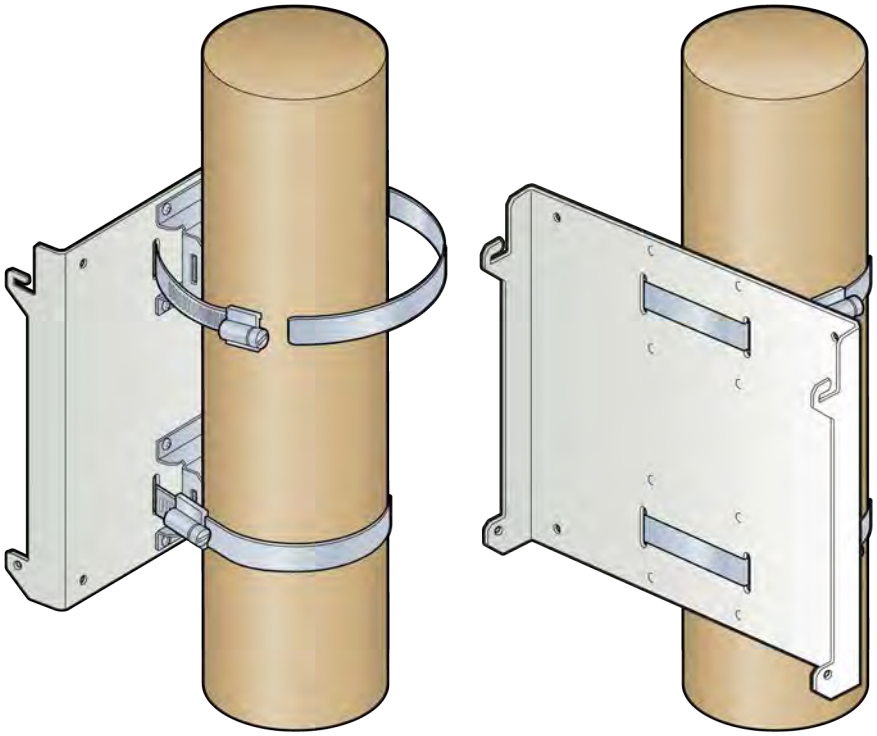

DRAFT

4 Insert two screws into the upper holes on opposite sides of the RP as shown in the drawing below.

CAUTION

Ensure that the RP is oriented correctly with the two antenna connectors at the top of the RP.

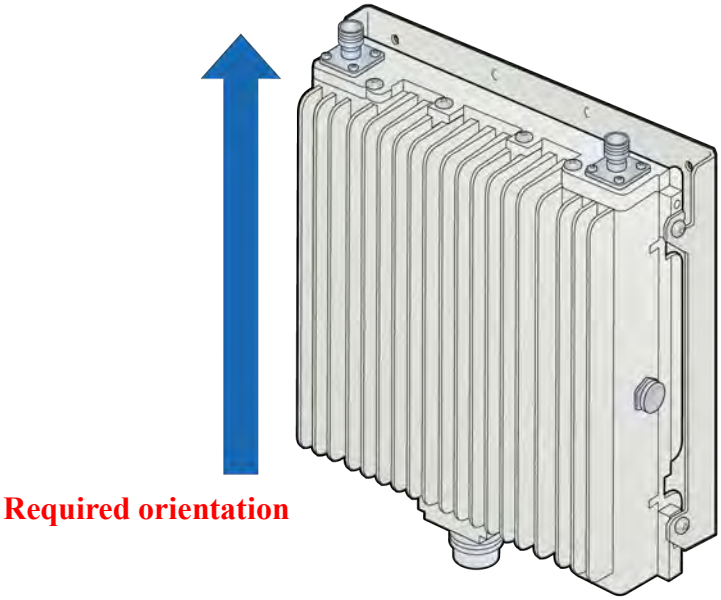

DRAFT

5 Hang the RP to the mounting bracket using the installed screws. Align holes at bottom location of bracket.

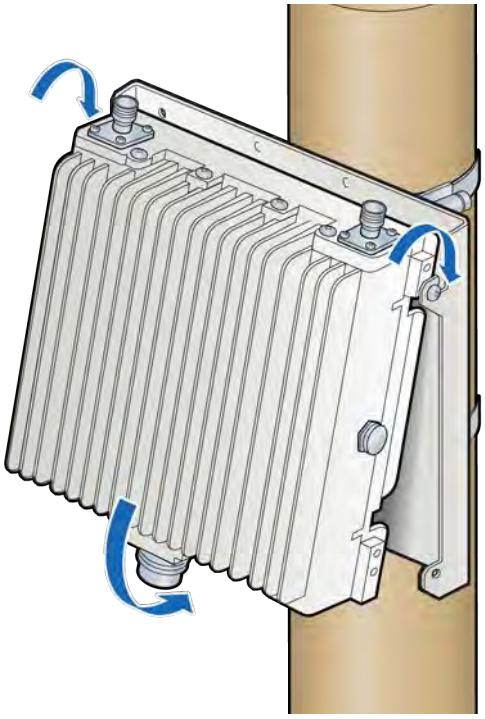

DRAFT

6 Insert and tighten the bottom screws through the plate hole into both sides of the RP. Be sure that all four screws are tightened.

NOTE: The torque requirement for the mounting screws is 20-21 in-lbs.

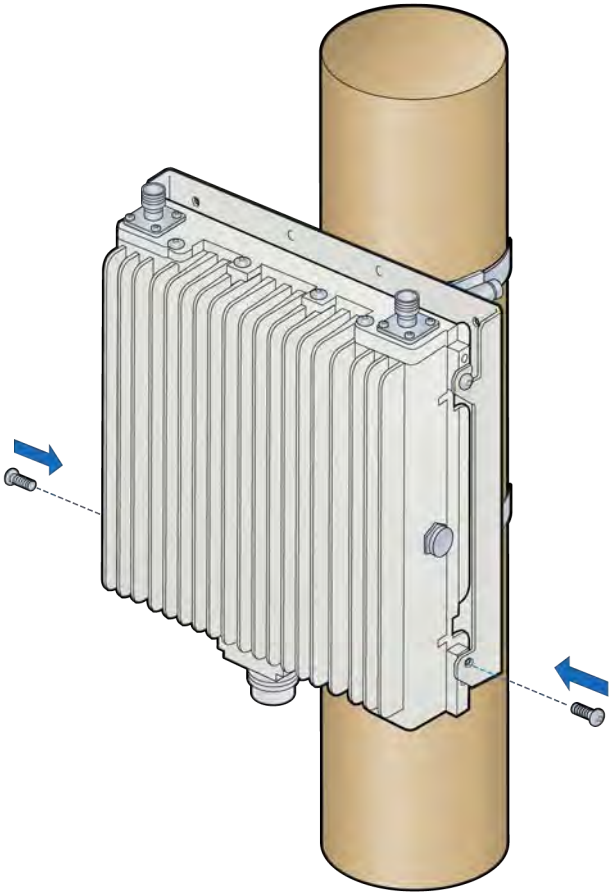

DRAFT

7 Connect the antenna couplers on the top of the RP.

NOTE: Check the antenna coupler manufacturer's documentation for torque requirements.

8 Connect the Ethernet cable RJ45 end to the bottom of the RP.

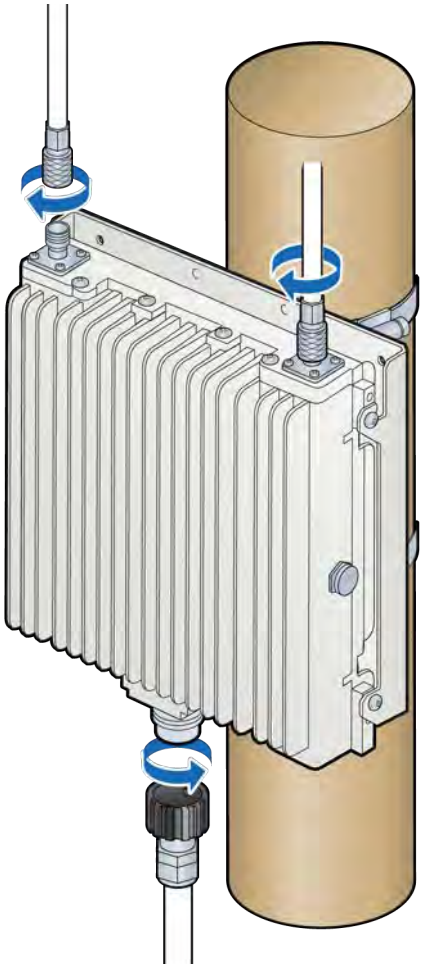

DRAFT

Horizontal pole mount

1 Attach mounting brackets to mounting plate.

NOTE: The torque requirement for the bracket mounting screws is 5-6 in-lbs.

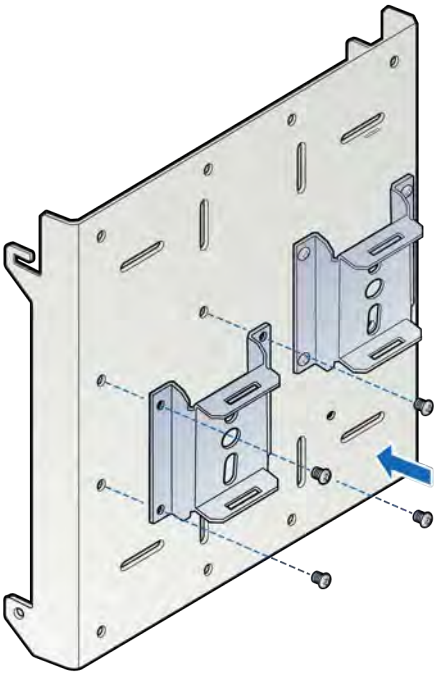

DRAFT

2 Slide the adjustable clamp through the slots on each RP mounting bracket on the RP plate.

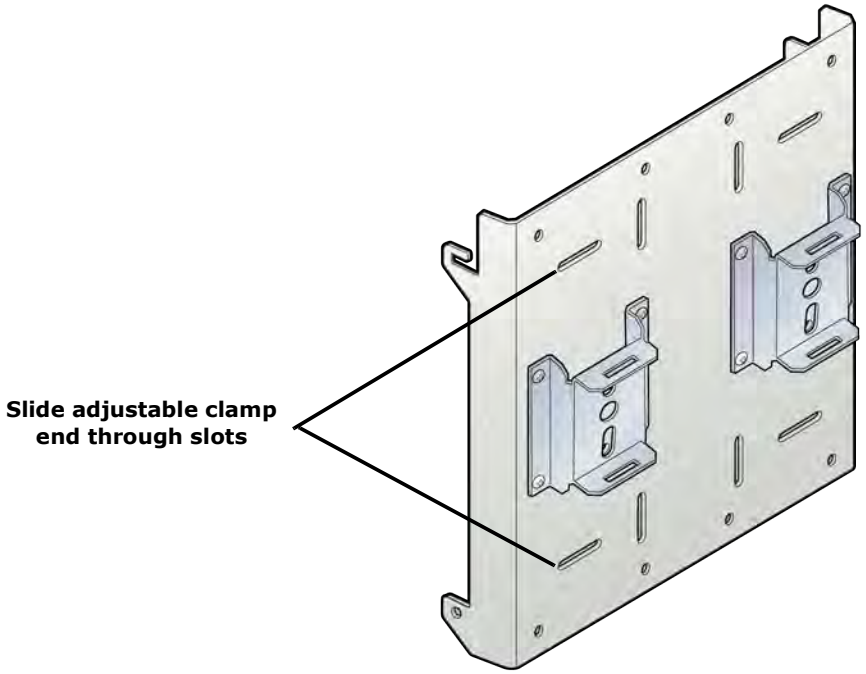

DRAFT

3 Wrap each clamp around the pole and tighten the clamp screw to secure the RP to the pole.

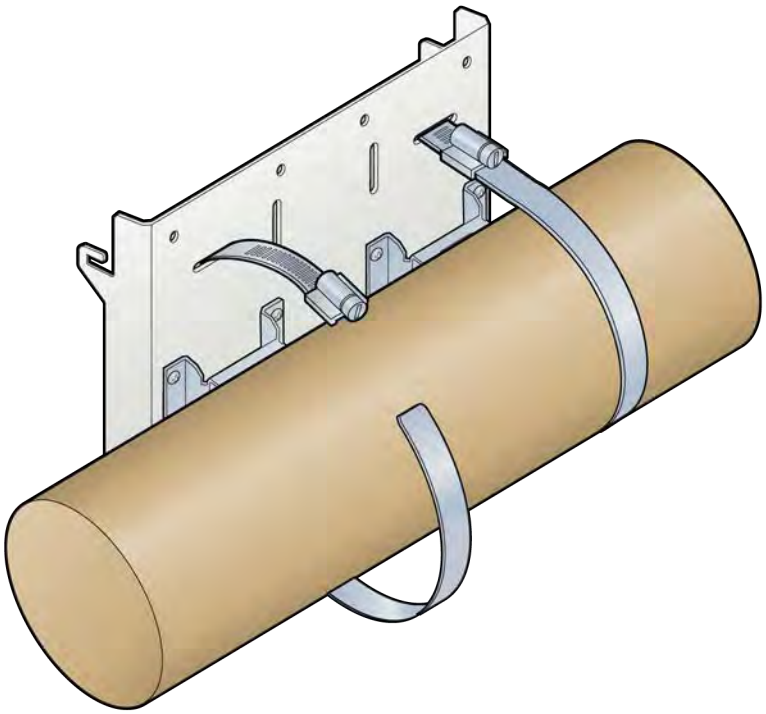

4 Insert two screws into the upper holes on opposite sides of the RP as shown in the drawing below.

DRAFT

CAUTION

Ensure that the RP is oriented correctly with the two antenna connectors at the top of the RP.

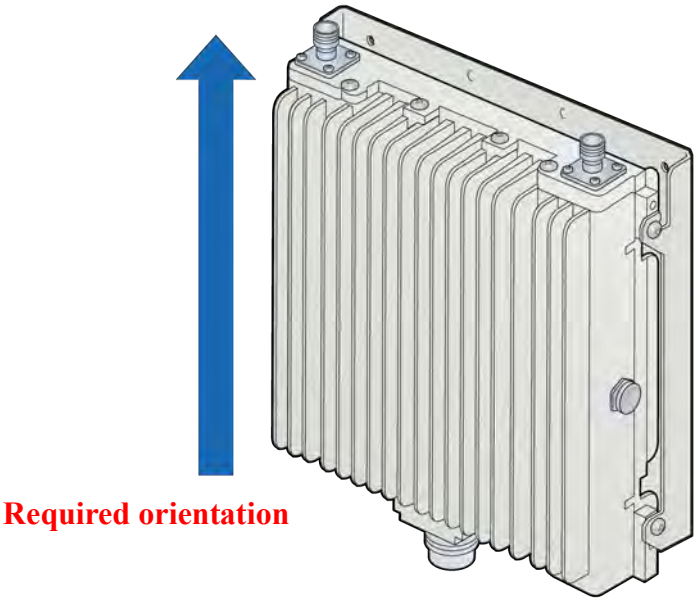

DRAFT

5 Hang the RP to the mounting bracket using the installed screws. Align holes at bottom location of bracket and install two additional screws.

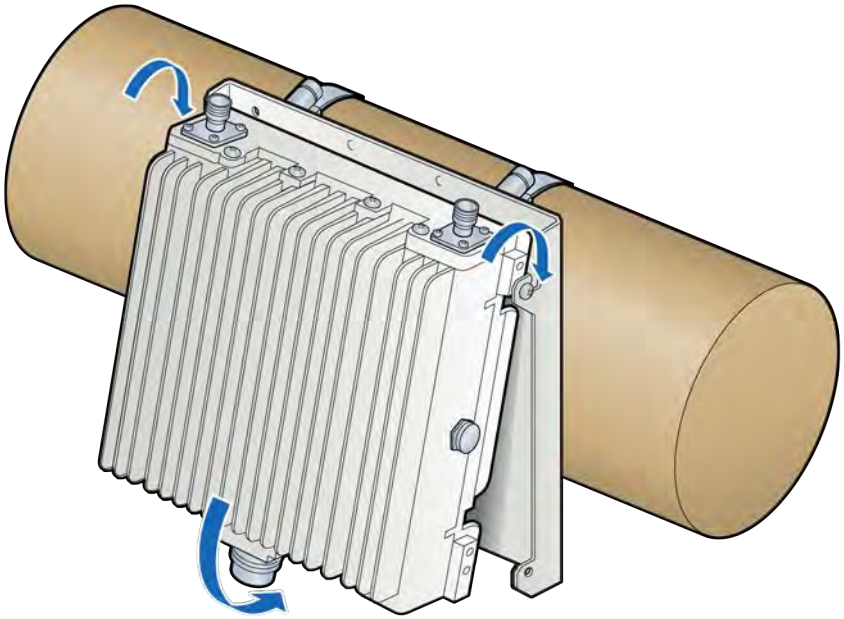

DRAFT

6 Insert and tighten the bottom screws through the plate hole into both sides of the RP. Be sure that all four screws are tightened.

NOTE: The torque requirement for the mounting screws is 20-21 in-lbs.

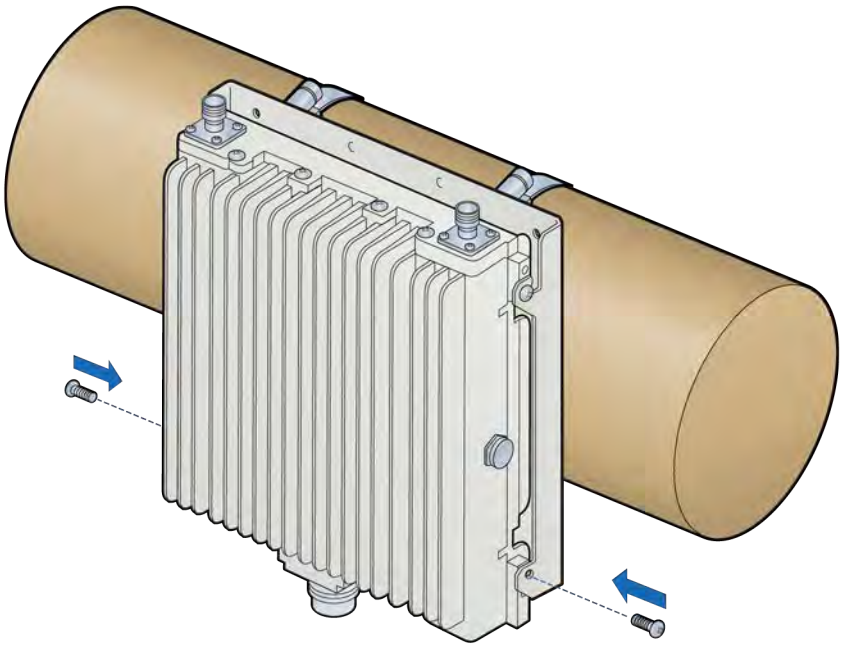

DRAFT

7 Connect the antenna couplers on the top of the RP.

NOTE: Check the antenna coupler manufacturer's documentation for torque requirements.

8 Connect the Ethernet cable RJ45 end to the bottom of the RP.

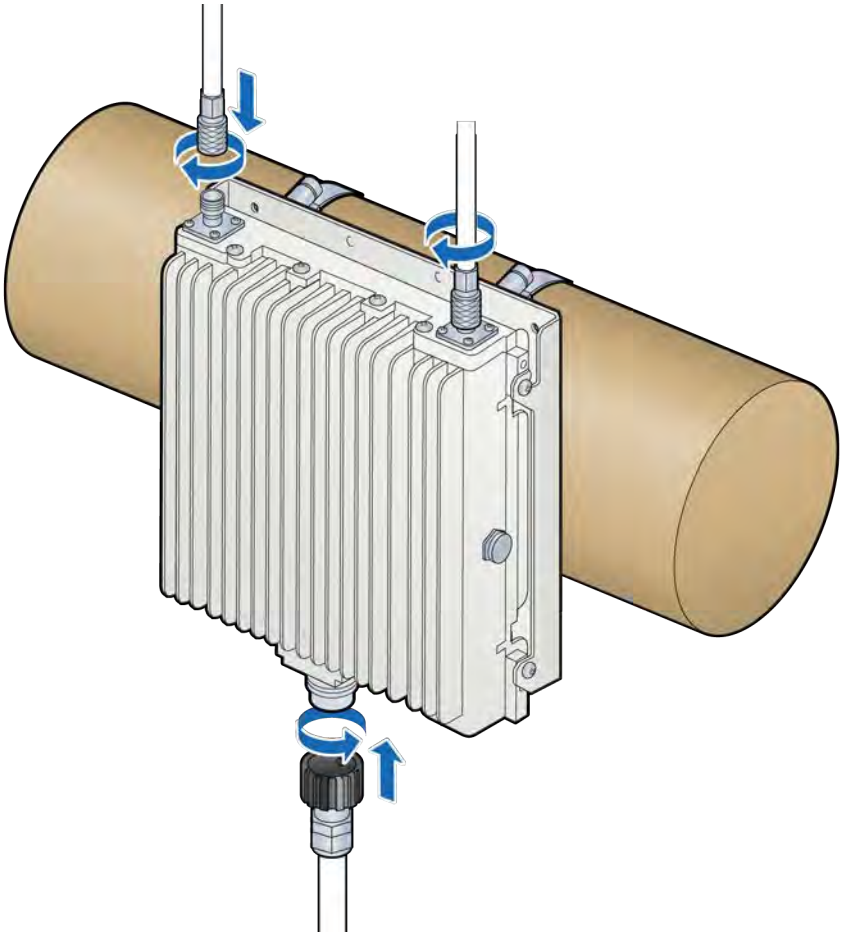

DRAFT

Wall mount installation

1 Drill four holes in the wall using the mounting plate to determine the hole locations. Mount the backplate on the wall with four molly screws.

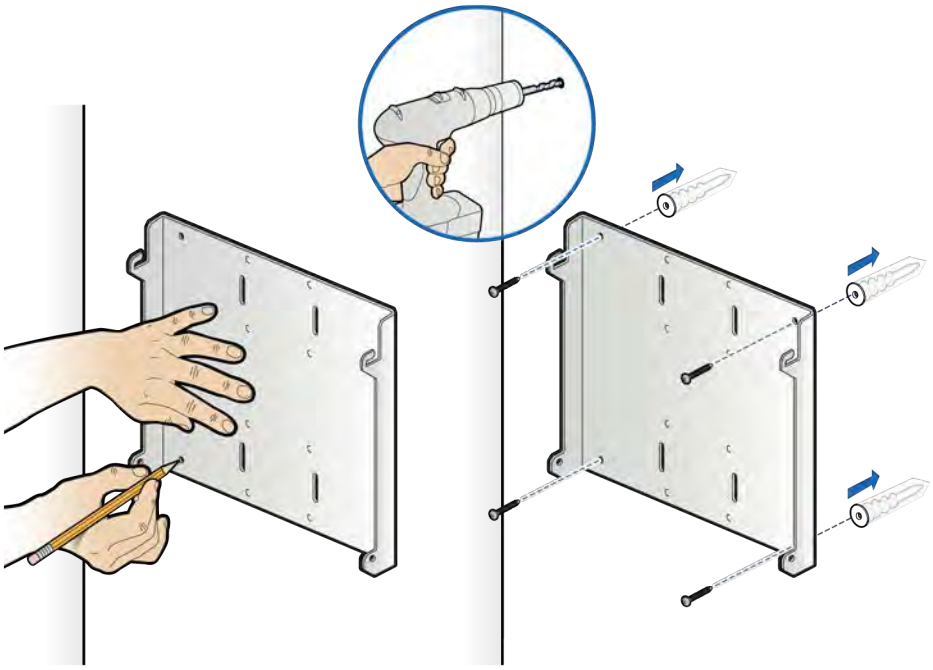

DRAFT

2 Insert two screws into the upper holes on opposite sides of the RP as shown in the drawing below.

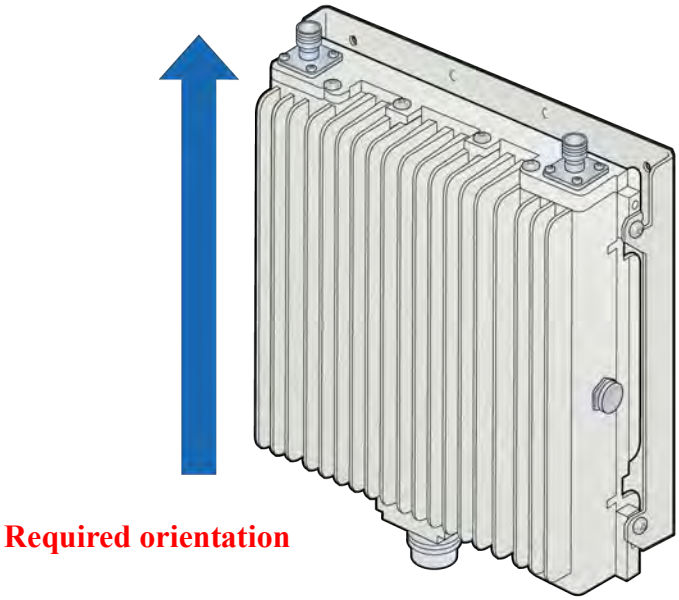

DRAFT

3 Attach the RP to the mounting plate. Tighten the top screws on the RP and insert and tighten the bottom screws on the RP.

NOTE: The torque requirement for the mounting screws is 20-21 in-lbs.

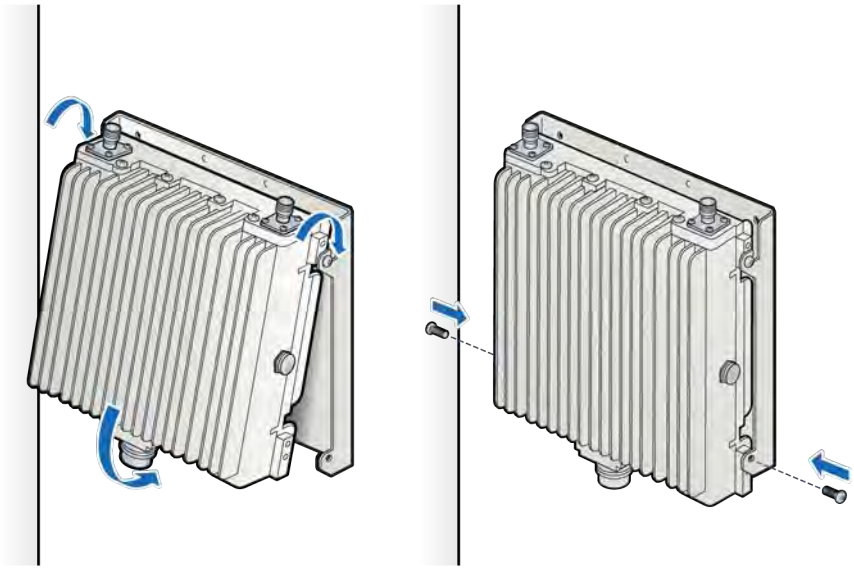

DRAFT

4. Insert and tighten the bottom screws through the plate hole into both sides of the RP.
5. Connect the antenna couplers on the top of the RP.

   NOTE: Check the antenna coupler manufacturer's documentation for torque requirements.

6. Connect the Ethernet cable RJ45 end to the bottom of the RP.

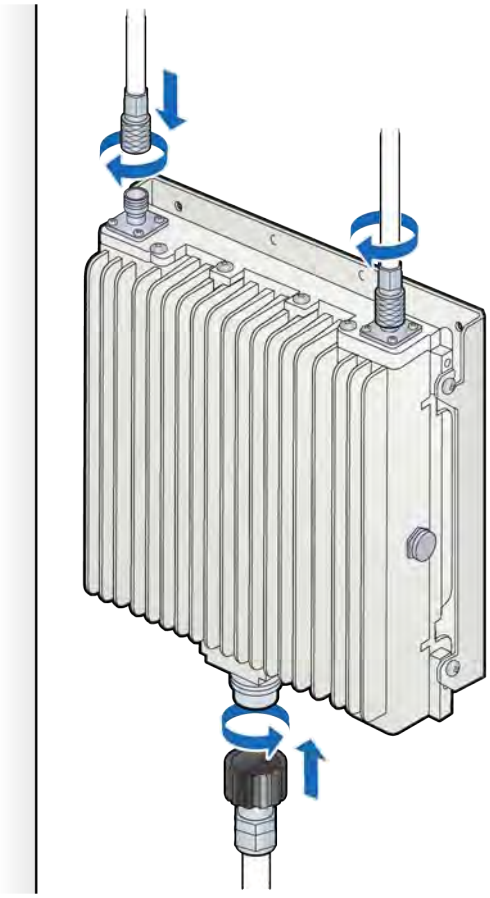

DRAFT