Chapter 7

RP2100 Installation

This chapter describes installing Rugged Radio Points on poles and walls.

Rugged Radio Point (RP2100) installation overview	7-2
Pole mount installation	7-4
Wall mount installation	7-17

Rugged Radio Point (RP2100) installation overview

The Rugged Radio Point (RP) ships with the following hardware:

- Radio Point
- Mounting plate
- Mounting brackets
- Four tamper-resistant mounting screws (M5)
- RJ45, IP67 connector
- Two 4.3-10 antenna couplers

NOTE

A tamper-resistant T25 Torx bit, 1/4" hex shank, attached to a driver handle, is required to secure the tamper-resistant mounting screws.

Mounting the Radio Point (RP) on a pole requires the following hardware provided by the system integrator:

- Two adjustable clamps

Mounting the Radio Point (RP) on a wall requires the following hardware provided by the system integrator:

- Four molly screws capable – 50 lb (23 kg) minimum rating

Before installing the RP on the pole, terminate the RP end of the Ethernet cable with the RJ45, IP67 connector provided in the box.

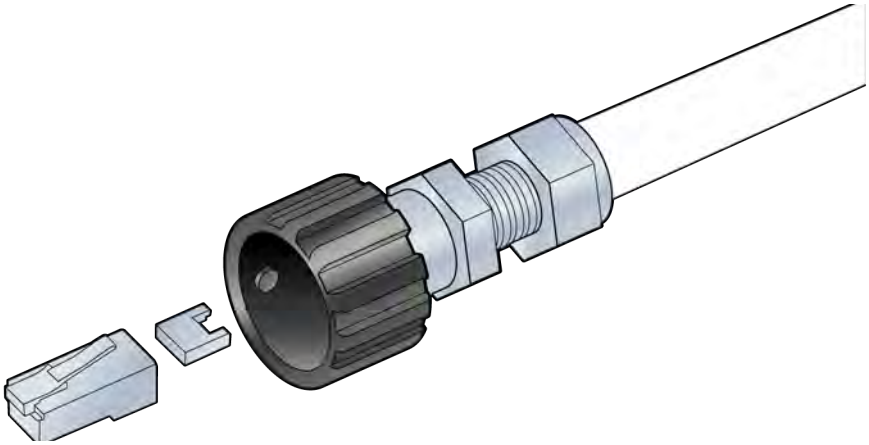

NOTE

Once the Radio Point is installed and the powered on, it may take up to 20 minutes for the frequency to stabilize and lock.

Pole mount installation

There are two orientations for pole mount installations:

- Vertical pole mount
- Horizontal pole mount

NOTE

The minimum pole diameter requirement is 4" (102mm).

Vertical pole mount

1. Attach mounting brackets to mounting plate.

   NOTE: The torque requirement for the bracket mounting screws is 5-6 in-lbs.

2. Slide the adjustable clamp through the slots on each RP mounting bracket on the RP plate.

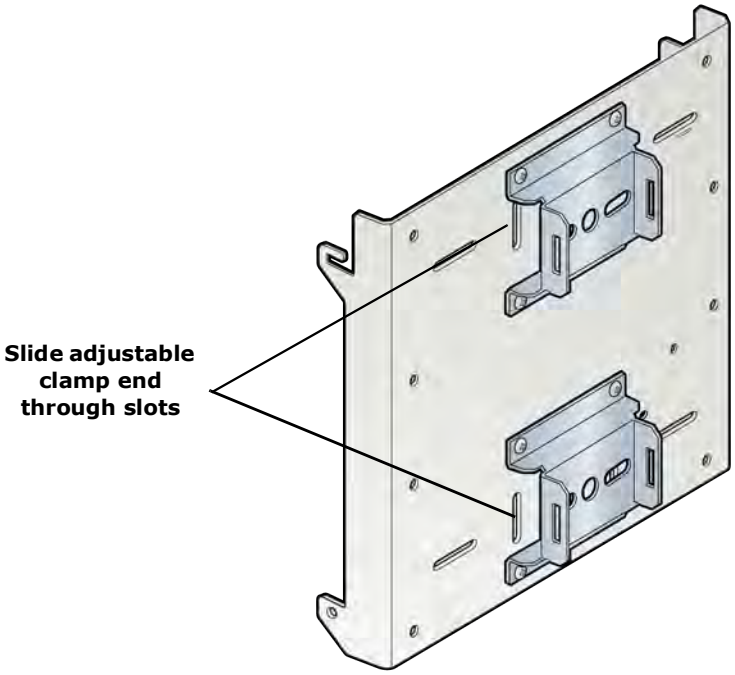

3 Wrap each clamp around the pole and tighten the clamp screw to secure the RP to the pole.

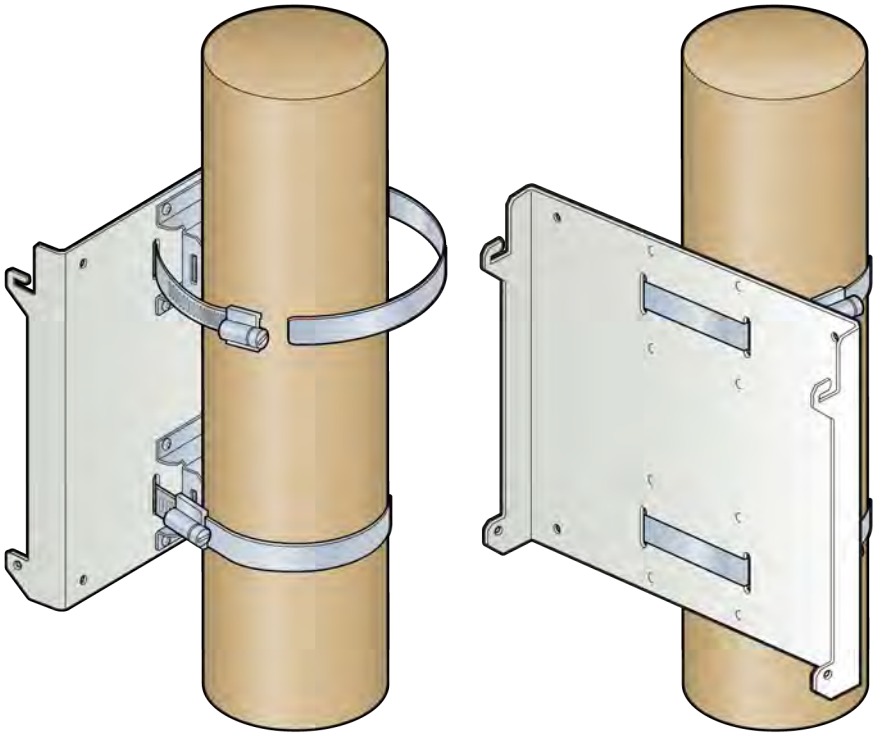

4 Insert two screws into the upper holes on opposite sides of the RP as shown in the drawing below.

CAUTION

Ensure that the RP is oriented correctly with the two antenna connectors at the top of the RP.

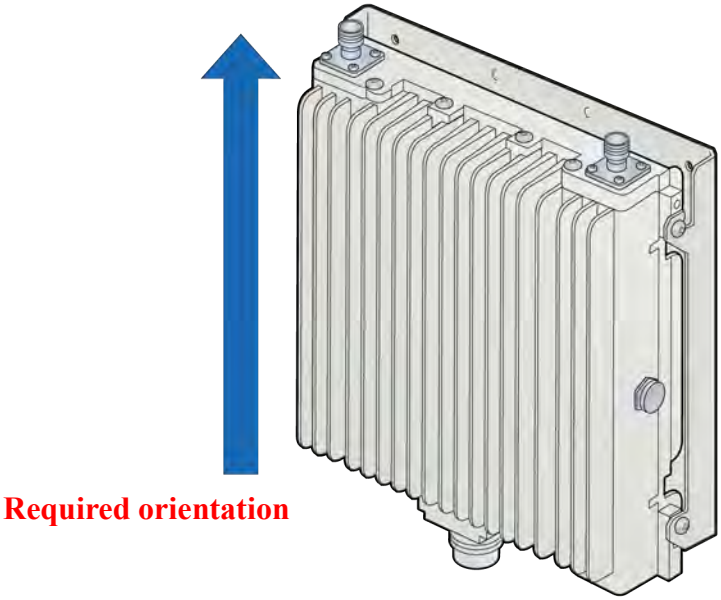

5 Hang the RP to the mounting bracket using the installed screws. Align holes at bottom location of bracket.

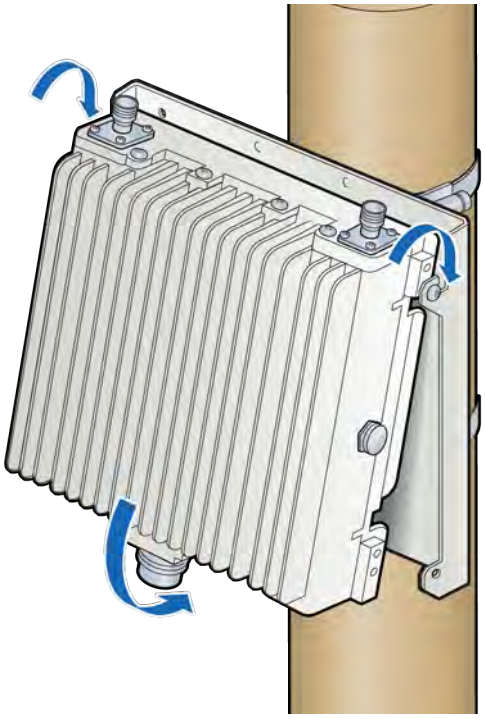

6 Insert and tighten the bottom screws through the plate hole into both sides of the RP. Be sure that all four screws are tightened.

NOTE: The torque requirement for the mounting screws is 20-21 in-lbs.

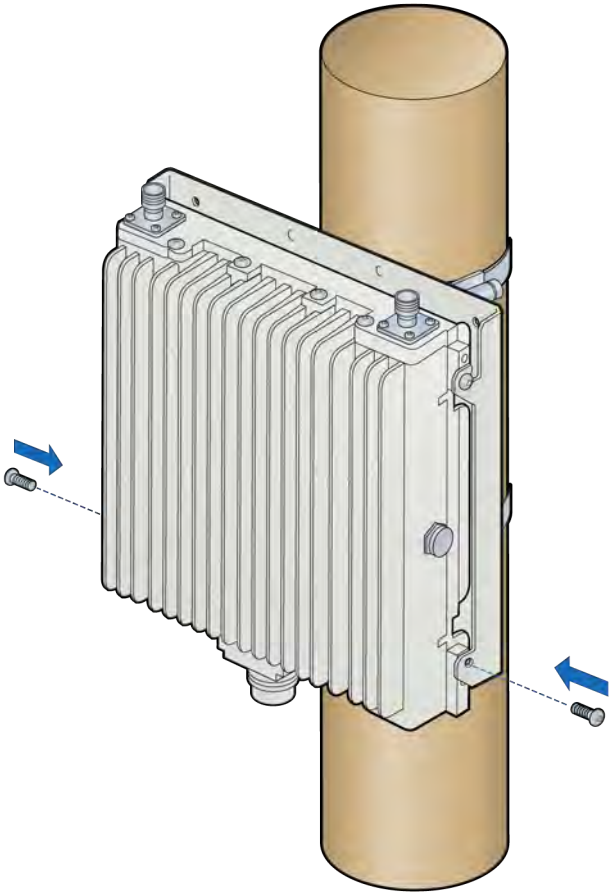

7 Connect the antenna couplers on the top of the RP.

NOTE: Check the antenna coupler manufacturer's documentation for torque requirements.

8 Connect the Ethernet cable RJ45 end to the bottom of the RP.

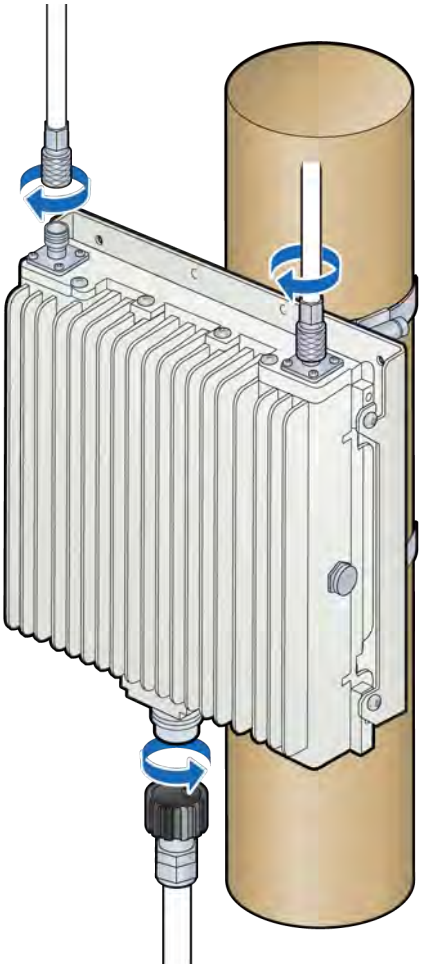

Horizontal pole mount

1 Attach mounting brackets to mounting plate.

NOTE: The torque requirement for the bracket mounting screws is 5-6 in-lbs.

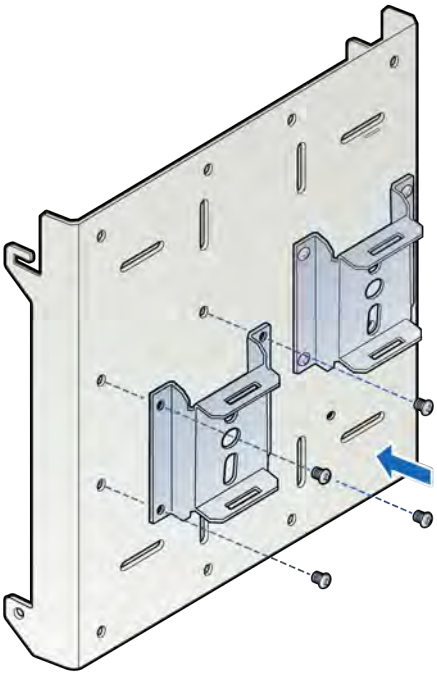

2 Slide the adjustable clamp through the slots on each RP mounting bracket on the RP plate.

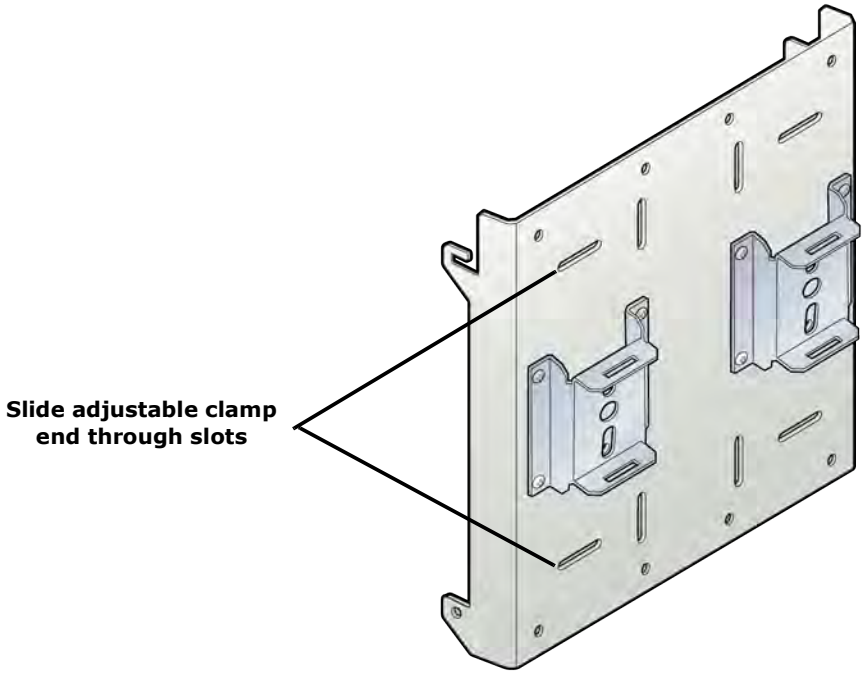

3 Wrap each clamp around the pole and tighten the clamp screw to secure the RP to the pole.

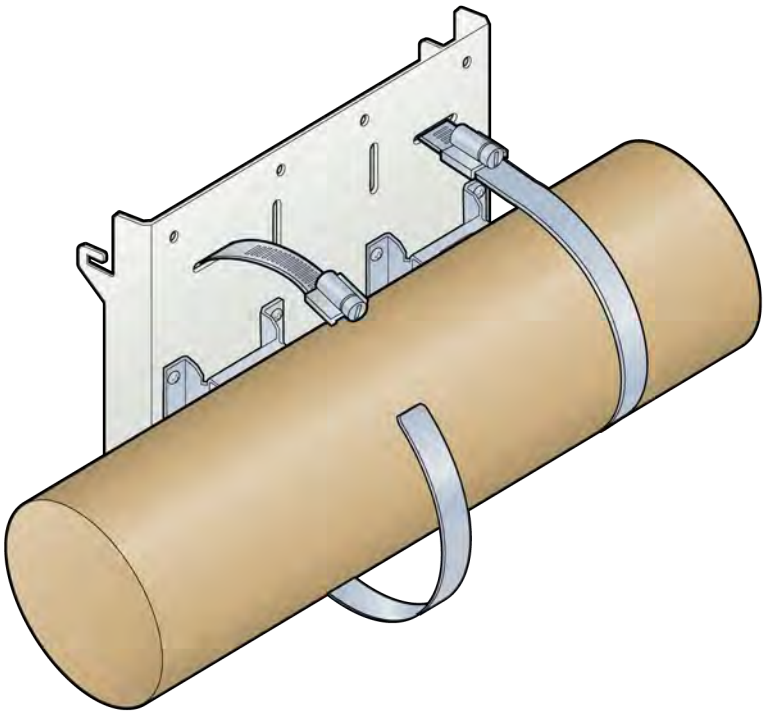

4 Insert two screws into the upper holes on opposite sides of the RP as shown in the drawing below.

CAUTION

Ensure that the RP is oriented correctly with the two antenna connectors at the top of the RP.

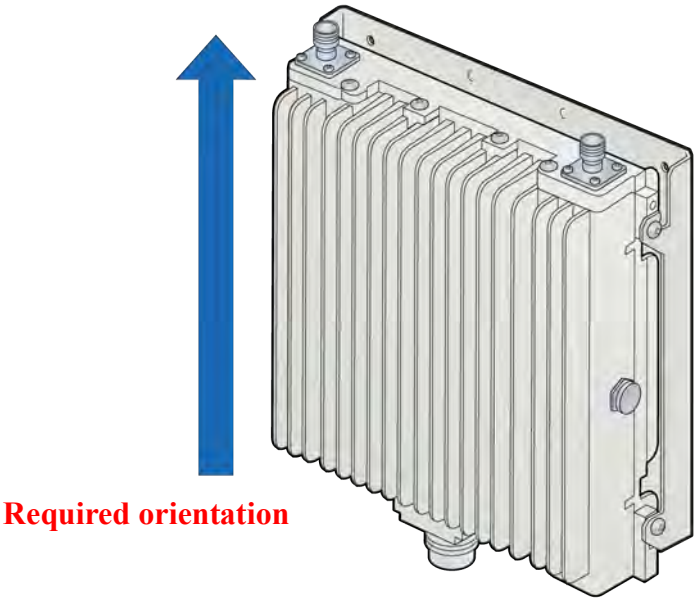

5 Hang the RP to the mounting bracket using the installed screws. Align holes at bottom location of bracket and install two additional screws.

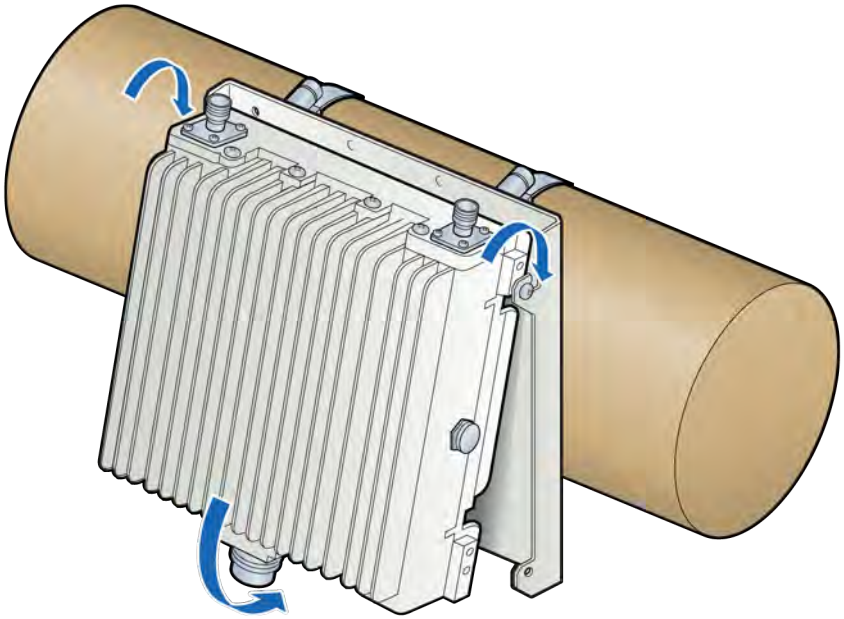

6 Insert and tighten the bottom screws through the plate hole into both sides of the RP. Be sure that all four screws are tightened.

NOTE: The torque requirement for the mounting screws is 20-21 in-lbs.

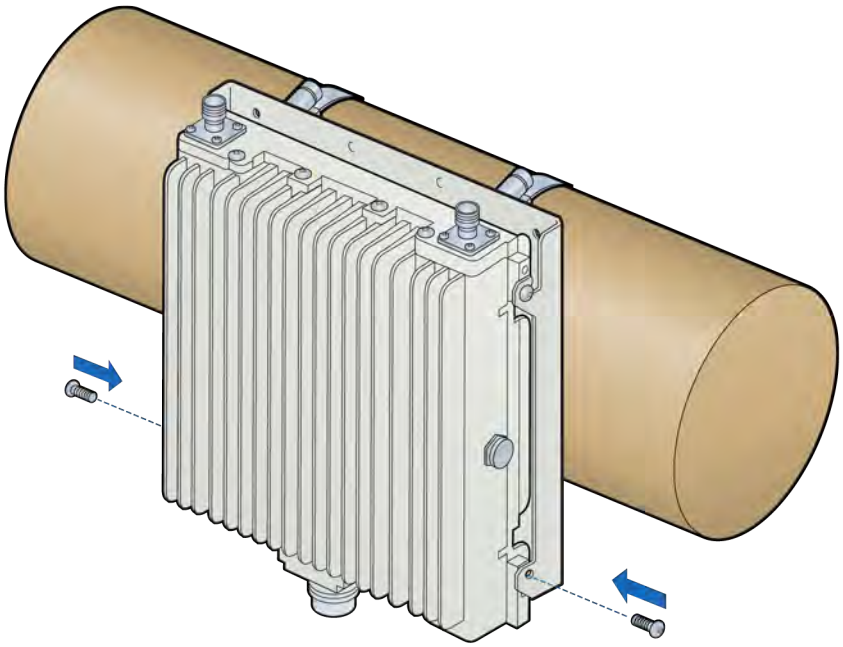

7 Connect the antenna couplers on the top of the RP.

NOTE: Check the antenna coupler manufacturer's documentation for torque requirements.

8 Connect the Ethernet cable RJ45 end to the bottom of the RP.

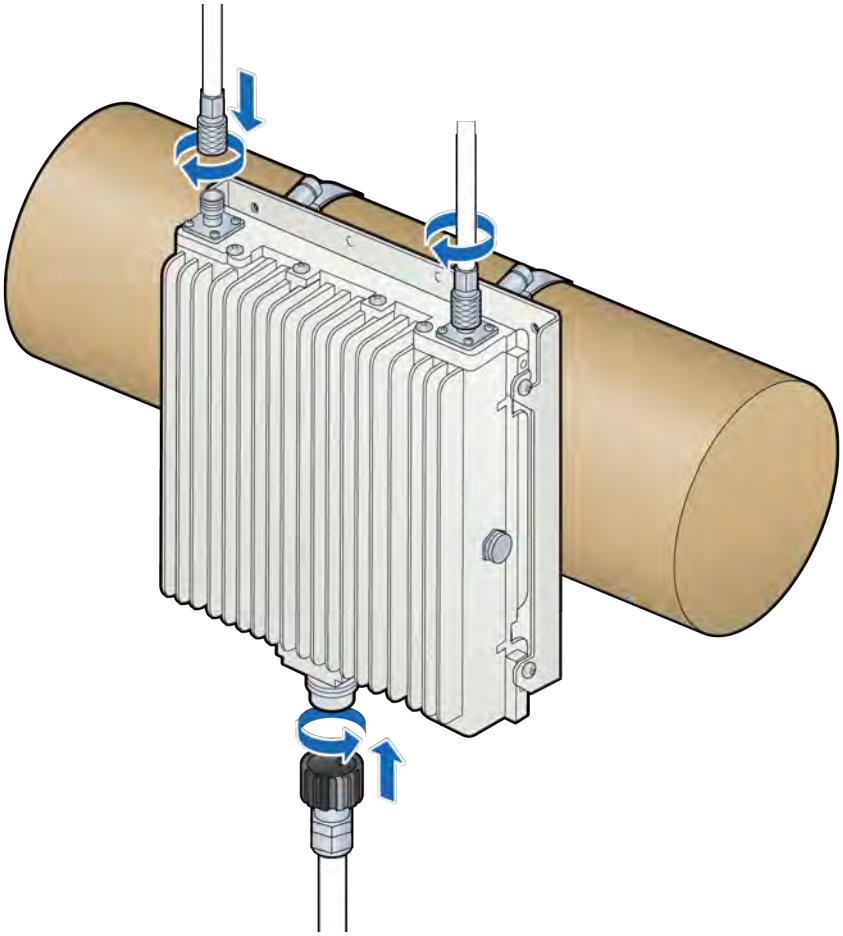

Wall mount installation

1 Drill four holes in the wall using the mounting plate to determine the hole locations. Mount the backplate on the wall with four molly screws.

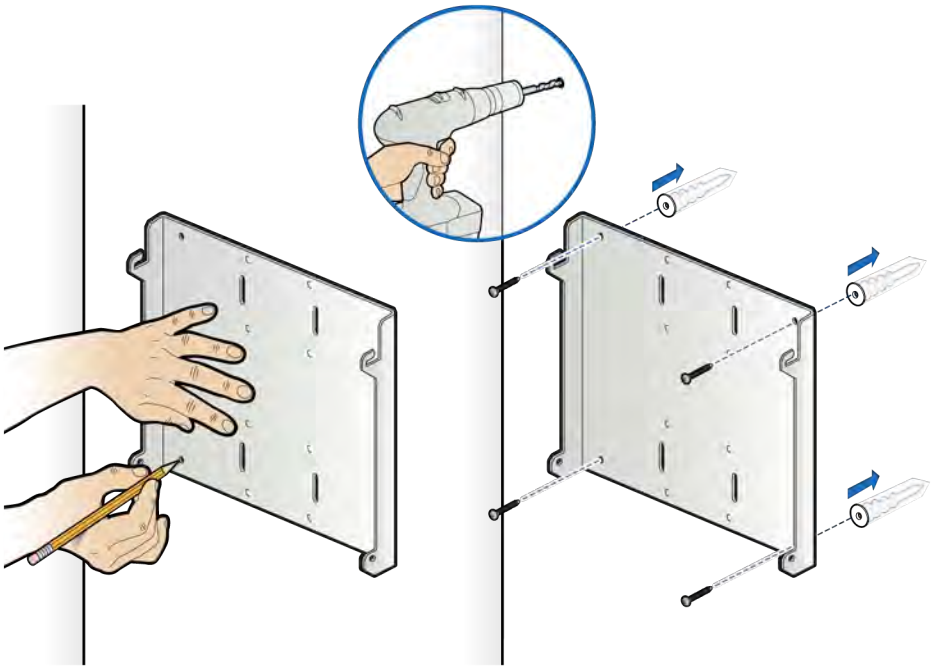

2 Insert two screws into the upper holes on opposite sides of the RP as shown in the drawing below.

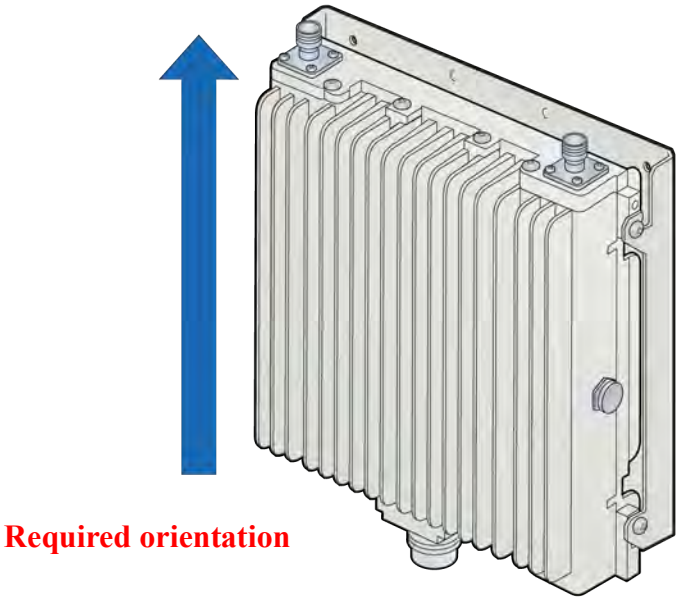

3 Attach the RP to the mounting plate. Tighten the top screws on the RP and insert and tighten the bottom screws on the RP.

NOTE: The torque requirement for the mounting screws is 20-21 in-lbs.

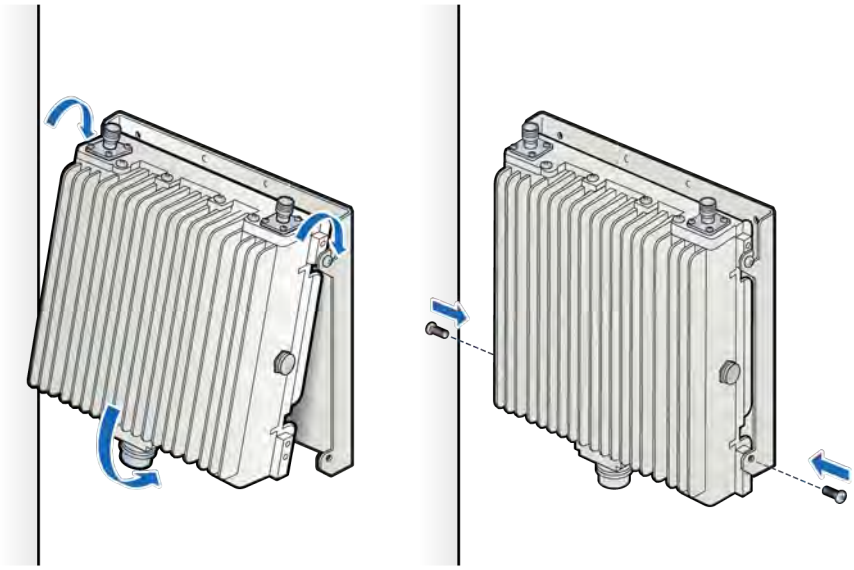

4. Insert and tighten the bottom screws through the plate hole into both sides of the RP.
5. Connect the antenna couplers on the top of the RP.

   NOTE: Check the antenna coupler manufacturer's documentation for torque requirements.

6. Connect the Ethernet cable RJ45 end to the bottom of the RP.

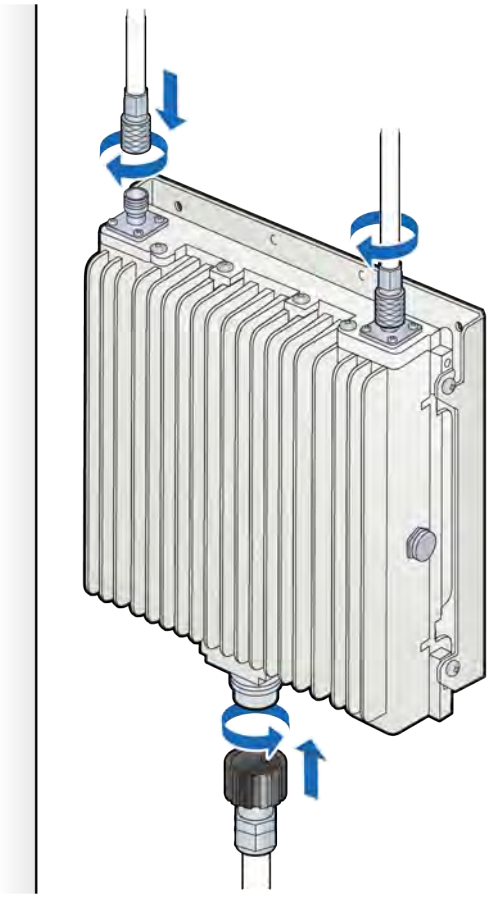

Part III: Appendices

Appendix A **Safety**

Appendix B **Installation troubleshooting**

Appendix C **Specifications**

Appendix D **Field Replaceable Units**

Appendix E **Cable installation and power separation guidelines**

Appendix A

Safety

This appendix contains specifications for CommScope ONECELL, including FCC information and technical data.

Radiation Exposure Statement	A-2
Human exposure limits for ONECELL deployments	A-2
FCC ID	A-6

Radiation Exposure Statement

Important: Changes or modifications not expressly approved by CommScope LLC could void your authority to operate the equipment.

FCC Part 15

The Baseband Controller and RP5100 have been tested and found to comply with the limits for Class A equipment, pursuant to Part 15 of the FCC Rules.

NOTE

This equipment has been tested and found to comply with the limits for a Class A digital device, pursuant to part 15 of the FCC Rules. These limits are designed to provide reasonable protection against harmful interference when the equipment is operated in a commercial environment. This equipment generates, uses, and can radiate radio frequency energy and, if not installed and used in accordance with the instruction manual, may cause harmful interference to radio communications. Operation of this equipment in a residential area is likely to cause harmful interference in which case the user will be required to correct the interference at his own expense.

For more information, see the publication femtocells and Health at http:// www.femtoforum.org or visit the FCC website at www.fcc.gov.

EN55032

WARNING

This equipment is compliant with Class A of EN55032. In a residential environment, this equipment may cause radio interference.

Human exposure limits for ONECELL deployments

The human exposure limits for the ONECELL product is calculated by using the Maximum Permissible Exposure (MPE) method associated with fixed-type transmitter devices at a minimum exposure distance of 20 cm.

WARNING

This equipment is not suitable for use in locations where children are likely to be present.

Table A-1 includes values for one Radio Point (RP5000 series) and four Radio Points per chassis.

Table A-1. RF exposure for ONECELL at maximum power internal antennas for RP5000 series

Parameter	RPM-A5A11-B66	RPM-A5A11-B02	RPM-I5A11-B01	RPM-I5A11-B03	RPM-I5A11-B07
Tx Power (dBm) per antenna	24.13	24.23	24.25	24.00	24.70
Tx Loss (dB)	0	0	0	0	0
Tx Antenna Gain (dBi)	4	4	4	4	4
Transmitter Duty Cycle %	100	100	100	100	100
Number of Antennas (MIMO)	2	2	2	2	2
Contribution due to multiple antennas (dB)	3.0103	3.0103	3.0103	3.0103	3.0103
Derived Total EIRP (dBW)	1.140	1.240	1.260	1.010	1.710
Bands	66	2	1	3	7
Frequency Range (MHz)	2110-2200	1930-1990	2110-2170	1805-1880	2620-2690
Point Source Total EIRP (watts)	1.300	1.331	1.337	1.262	1.483
Power Density (W/m2) @ 20 cm	2.587	2.647	2.569	2.510	2.950

1. For persons with implants, the maximum calculated distance of 30cm. This applies to any combination of up to four radio modules in Bands 1,3 and 7.
2. For general public and workers, a measured distance of 5mm was determined. This applies to any combination of up to four radio modules in Bands 1,3 and 7.

For general public and workers, a calculated distance of 20cm was determined. This applies to any combination of up to four radio modules in Bands 2 and 66.

Parameter	RPM-I5A11-B17	RPM-A5A11-B12	RPM-A5A11-B14	RPM-A5A11-B05	RPM-A5A11-B30
Tx Power (dBm) per antenna	21.70	21.88	21.45	21.58	20.99
Tx Loss (dB)	0	0	0	0	0
Tx Antenna Gain (dBi)	4	4	4	2	5

Parameter	RPM-I5A11-B17	RPM-A5A11-B12	RPM-A5A11-B14	RPM-A5A11-B05	RPM-A5A11-B30
Transmitter Duty Cycle %	100	100	100	100	100
Number of Antennas (MIMO)	2	2	2	2	2
Contribution due to multiple antennas (dB)	3.0103	3.0103	3.0103	3.0103	3.0103
Derived Total EIRP (dBW)	-1.290	-1.110	-1.540	-3.410	-1.000
Bands	12	12	14	5	30
Frequency Range (MHz)	734-746	729 - 746	758 - 768	869-894	2350-2360
Point Source Total EIRP (watts)	0.743	0.775	0.702	0.456	0.794
Power Density (W/m2) @ 20 cm	1.478	1.541	1.396	0.907	1.58

Table A-2 includes values for one Radio Point (RP2000 and RP2100) and four Radio Points per chassis.

Table A-2. RF exposure for ONECELL at maximum power internal antennas for RP2000 series

Parameter	Indoor RP-A2014 & RP-I2014		Rugged RP-A2114 & RP-I2114			
Tx Power (dBm) per antenna	21	21	21	21	21	21
Tx Loss (dB)	0	0	0	0	0	0
Tx Antenna Gain (dBi)	0	5	11.8	12	12.5	13.5
Transmitter Duty Cycle %	100	100	100	100	100	100
Number of Antennas (MIMO)	2	2	2	2	2	2
Contribution due to multiple antennas (dB)	3.0103	3.0103	3.0103	3.0103	3.0103	3.0103
Derived Total EIRP (dBW)	-5.990	-0.990	5.810	6.010	6.510	7.510
Bands	12,13,17	1,2,3,4,7,10,25	12,13,17	3	1,2,4,10,25	2620-2690
Frequency Range (MHz)	729-756	1805-2690	729-756	1805-1880	1930-2170	2620-2690
Point Source Total EIRP (watts)	0.252	0.796	3.811	3.991	4.477	5.637

Table A-2. RF exposure for ONECELL at maximum power internal antennas for RP2000 series *(continued)*

Parameter	Indoor RP-A2014 & RP-I2014		Rugged RP-A2114 & RP-I2114			
Power Density (W/m2) @ 20 cm	0.501	1.584	7.582	7.939	8.908	11.214

Reference documents

[1] Federal Communications Commission Document OET Bulletin 65, Supplement C, 2001, Evaluating Compliance with FCC guidelines for Human Exposure to radio frequency Electromagnetic Fields, US Federal Communications Commission, Office of Engineering and Technology June 2001.

[2] Federal Communications Commission Document OET Bulletin 56, “Questions and answers about biological effects and potential hazards of radio frequency electromagnetic fields”, Federal Communications Commission Office of Engineering and Technology, August 1999.

[3] ICNIRP Guidelines for limiting exposure to time varying electric, magnetic and electromagnetic fields up to 300 GHz. International Commission on Non Ionizing Radiation, published in Health Physics 74 (4): 494-522; 1998

[4] ICNIRP Statement on EMF-Emitting New Technologies, International Commission on Non-Ionizing Radiation, published in Health Physics 94 (4):376-392, 2008

[5] 3GPP Document 3GPP TS 36.104 version 10.11.0 Release 10,” LTE Evolved Universal Terrestrial Radio Access (E-UTRA); Base Station (BS) radio transmission and reception”

FCC ID

The FCC ID is available on the information labels attached to the RPs.

RP5100 series

For the RP5100i, the FCC ID for each of the installed radio modules is visible when the cover is removed. The drawing below shows the label on the radio module.

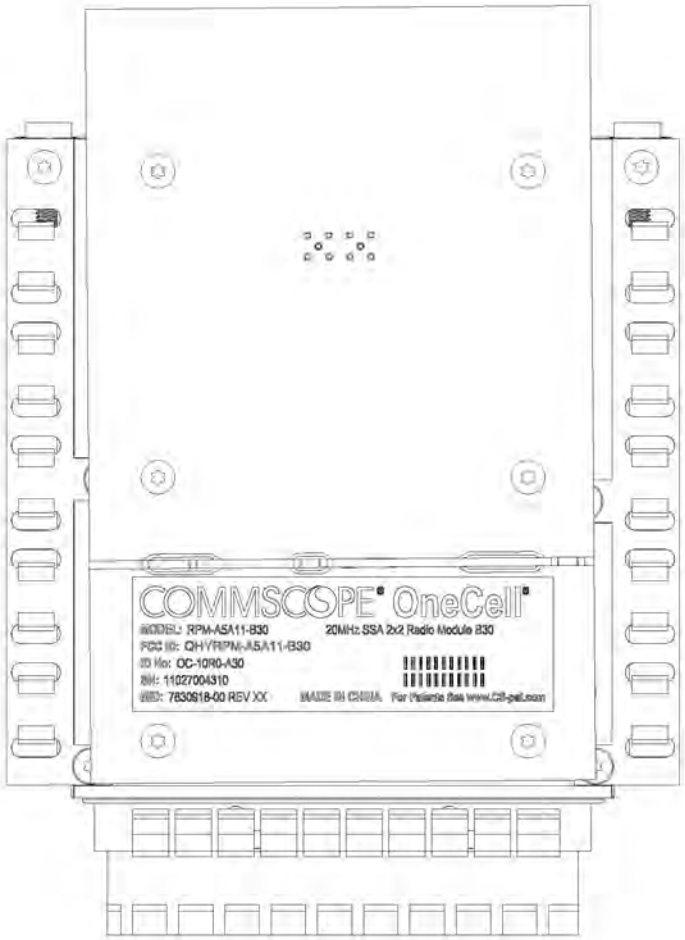

The RP5100r FCC ID is on the label located on the side of device as shown in the drawing below.

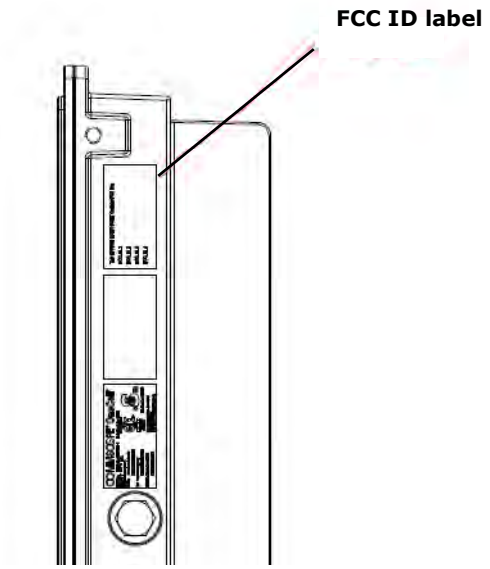

RP2000 series

The RP2000 FCC ID is on the label located on the back of the device as shown in the drawing below.

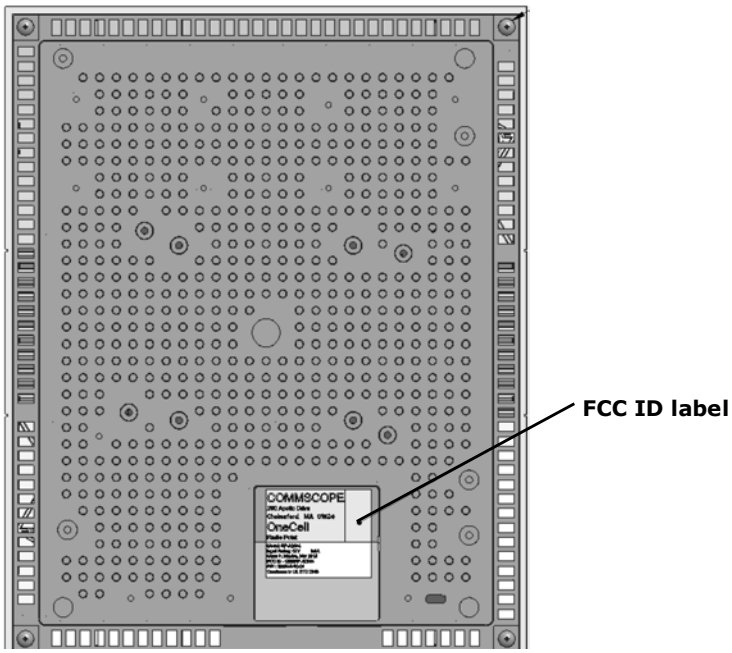

The RP2100 FCC ID is on the label located on the side of the device as shown in the drawing below.

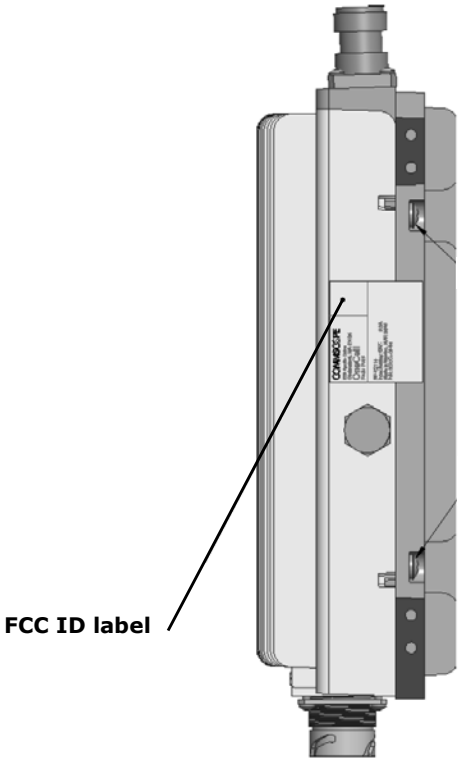

Appendix B

Installation troubleshooting

This section contains information on troubleshooting the ONECELL installation. It includes the LED patterns for the Baseband Controller and Radio points.

Baseband Controller LED patterns	B-2
Radio Point LED patterns	B-4

Baseband Controller LED patterns

The Baseband Controller has four LEDs on the front panel. The following table shows

- Display pattern for each LED
- What the pattern indicates
- Action to take, if any, to resolve the issue

LED	Display Pattern	Indicates	Action to Take
STATUS	Green, solid	Power On Sectors up	None
	Amber, solid	Self-test failure	Replace Baseband Controller
	Green, blinking	Firmware upgrade from DMS Sectors not up	None
	Amber, blinking	No configuration from DMS	• Check DMS availability • Check if the provisioning is correct • Escalate to operator
	OFF	BC rebooting after upgrade	None
	Red, solid*	Error in system - software or hardware issues detected	Replace Baseband Controller Module
RP ERROR	Green, solid	Power On	None
	Amber, solid	Self-test failure	Replace Baseband Controller
	Amber, blinking	No Radio Points connected	Check RP cable
	Off	Radio Points connected, firmware upgrade from DMS	None
	Red, blinking	Radio Point alarm - PLL state unlock; service impacting alarm from Radio Point (alarm in one or more RP)	Check 1588 VLAN configuration

LED	Display Pattern	Indicates	Action to Take
TIMING LED	Green, solid	Power On, timing	None
	Amber, solid	Self-test failure	Replace Baseband Controller
	Amber, blinking	No timing	Check GPS antenna connection feed
	Off	Firmware upgrade from DMS	None
	Red, solid*	Error in system GPS module down Software/Hardware issues	Replace Baseband Controller Module
CORE LED	Green, solid	Power On Connection to MME	None
	Amber, solid	Self-test failure	Replace Baseband Controller
	Amber, blinking	No connection to MME IPsec is up	• Check the MME configuration on the BC • Check if MME is reachable
	Off	Firmware upgrade from DMS	None
	Red, blinking	Internet connection IPsec down	• Check if Security Gateway is reachable • Check security credentials
	Red, solid*	No Internet Interface hardware issues	Replace Baseband Controller Module
* Note: When all of the LEDs are solid red, there is a BC hardware failure.			

Radio Point LED patterns

This section contains LED patterns for RP5100 series and RP2000 series.

RP5100i LED patterns

The Radio Point RP5100i supports six LEDs on the front cover.

Indicators are for

- four radios (one for each)
- ETH 1 – MR PORT:POE++, POE+, Ethernet link
- ETH 2– SR PORT:POE++, POE+, Ethernet link

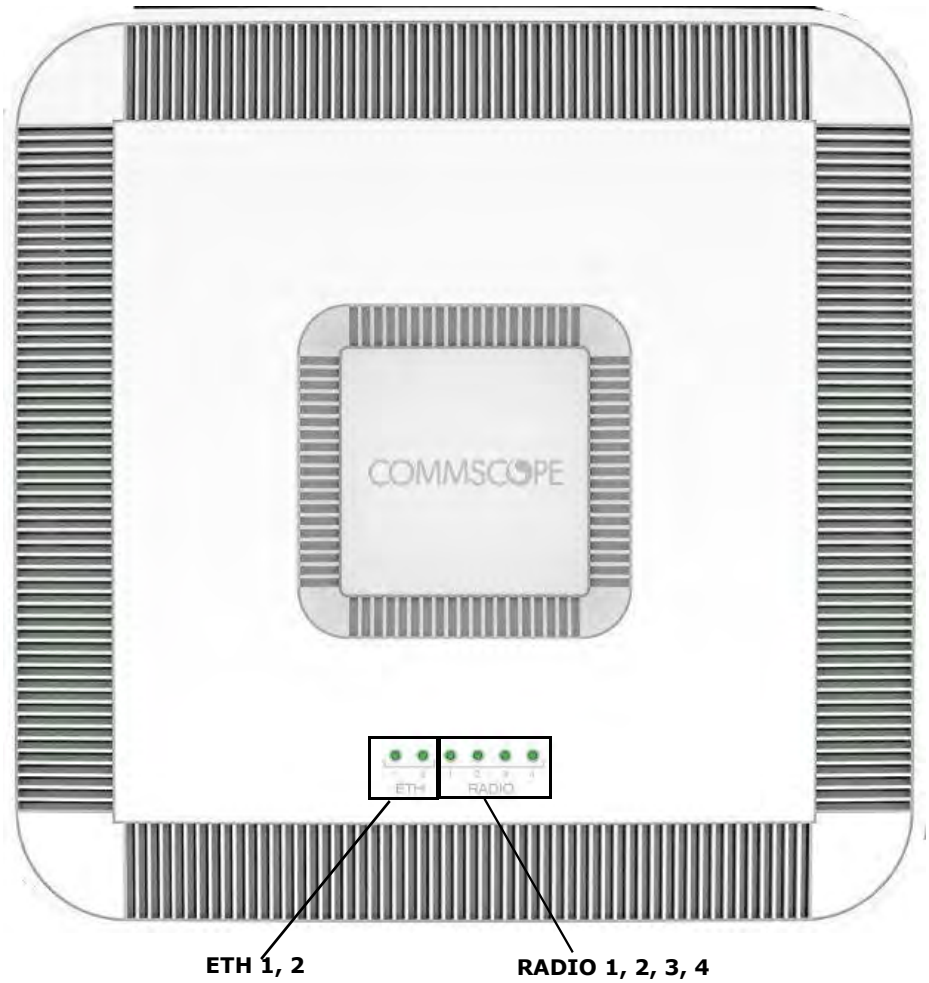

The following table shows:

- Display pattern for each LED
- What the pattern indicates
- Action to take, if any, to resolve the issue

LED	Display Pattern	Indicates	Action to Take
RADIO 1 RADIO 2 RADIO 3 RADIO 4	Green, solid	Power On, transmitting	None
	Amber, solid	• RFTxState OFF • No Controller Assigned • No Timing	• Check 1588 VLAN configuration • Verify that the Radio Point is in STANDBY because more than 32 RPs are connected
	Red, solid	• No connection to Controller • HW error • Low Power	Hardware error – replace Radio Point
	Green, blinking	Firmware upgrade	None
	Amber, blinking	RF module Self-Test Failure	Replace Radio Module
Eth 1	Green, solid	Power On, PoE++ power	None
	Amber, solid	Link up, no power	Check that the Ethernet cable is connected to the Radio Point
	Green, blinking	PoE+ power	None
	Amber, blinking	Platform Self-Test Failure	Replace Radio Point
	Red, solid	Ethernet port error	• Connect the Ethernet cable between the Baseband Controller and Radio Point • Replace Radio Point
Eth 2	Green, solid	Power On, PoE++ power	None
	Amber, solid	Link up, no power	Check that the Ethernet cable is connected to the Radio Point
	Green, blinking	PoE+ power	None
	Amber, blinking	Platform Self-Test Failure	Replace Radio Point
	Red, solid	Ethernet port error	• Connect the Ethernet cable between the Baseband Controller and Radio Point • Replace Radio Point
* **Note**: When all of the LEDs are solid red, there is an RP hardware failure.			

RP5100r LED patterns

The Radio Point RP5100r has one LED. The following table includes the LED patterns.

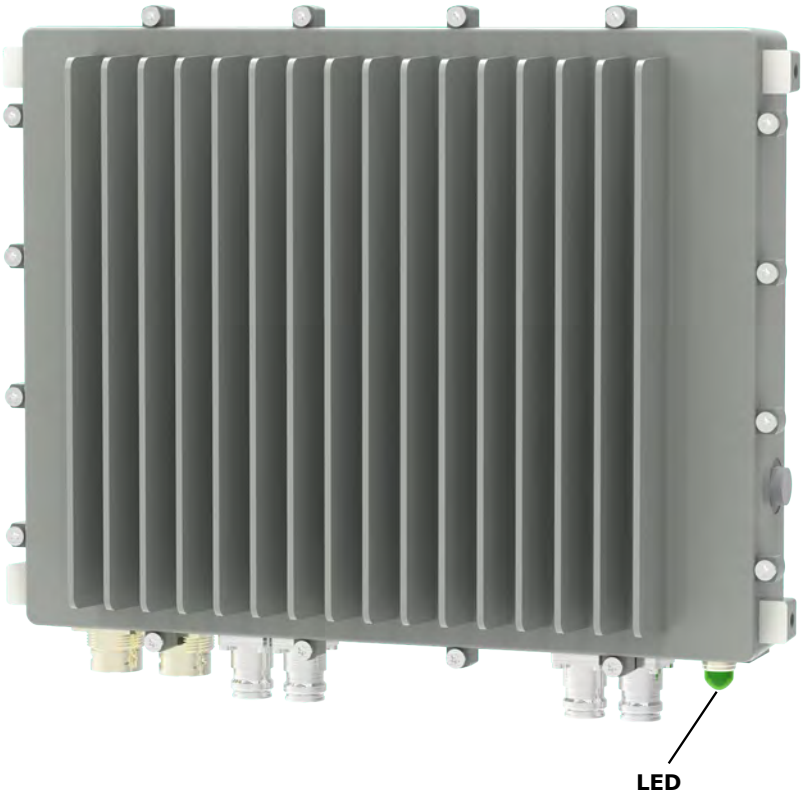

Display Pattern	Indicates	Action to Take
Green, blinking	• Not all available radio modules are in use • RFTx ON for all radio modules	No action required
Green, solid	• All available radio modules are in use • RFTx ON for all radio modules	No action required
Red, solid	Error in the system. • No module connected to the BC • All modules have low power	Replace Radio Point
Red, blinking	No modules in use **Note:** The radio modules may be connected to the BC.	• Check the connection between the RP and BC. • Check that the BC admin status is UP.
Green, fast blinking	Software upgrade	No action required

RP2000 series LED patterns

The RP2000 and RP2100 Radio Points have one LED. The LED for the RP2000 (Indoor) is on the front cover. The LED for the RP2100 (Rugged) is on the bottom of the Radio Point where the Ethernet cable port is located. The following table shows:

- Display pattern for each LED
- What the pattern indicates
- Action to take, if any, to resolve the issue

LED	Display Pattern	Indicates	Action to Take
STATUS	Green, solid	Power On RFTx state is ON	None
	Amber, solid	Self-test failure	Replace RP
	Green, blinking	Firmware upgrade Connected to Baseband Controller	None
	Amber, blinking	PLL state – unlock RFTx state – OFF or suspended L2 path verification failed Admin state – STANDBY	• Check 1588 VLAN configuration • Verify RP is in STANDBY because more than 32 Radio Points are connected to the same Baseband Controller
	Red, blinking	No connection to Baseband Controller (http)	• Connect the Ethernet cable between the Baseband Controller and Radio Point • Replace RP
	Red, solid	Error in system – software or hardware issues Interface issues detected AdminState – UNLOCKED	• Connect the Ethernet cable between the Baseband Controller and Radio Point • Upgrade Radio Point • Replace Radio Point

Appendix C

Specifications

This appendix contains specifications for CommScope ONECELL, including FCC information and technical data.

Environmental and physical specifications	C-1
SPF/SPF+ specifications	C-3

Environmental and physical specifications

The following table lists the electrical ratings and technical data for the Baseband Controller, RP5100 series and RP2000/RP2100.

Table C-1. Environmental and Physical specifications

Baseband Controller	
Environmental	Operating Temperatures: 0°C to 40°C Operating Humidity 10%-90% Non-Condensing
Power Requirements	120/230 VAC,1.7/0.85 A, 50/60 Hz
Power Consumption	204W Typical / 216W Maximum
Dimensions	1 Rack Unit Chassis hosts 2 Baseband Controller module units 19" W x 1.75" H x 18.8" D (483mm W x 44.4mm H x 477mm D)
Weight	Single BC 13.1 lbs (5.9 kg) Dual BC 19.1 lbs. (8.7 kg)
RP5100i	

Table C-1. Environmental and Physical specifications *(continued)*

Environmental	Operating Temperatures: 0 to 50°C (Plenum rated: UL-2043) Operating Humidity 10%-95% Non-Condensing Operating temperatures: 0°C to 50°C Active Cooling/Fans, acoustic noise: 39.5 dBA at 25C
Power Requirements	IEEE802.3bt-type 4 PoE++
Power Consumption	Up to: 72W (26W + 11.5W per RM)
Dimensions	13.54" W x13.54 H x 3.35" D (344.0 mm W x 344.0 mm H x 85.0 mm D)
Weight	8.82 lbs (4 kg)
RP5100r	
Environmental	Operating Temperatures: 0 to 50°C (Plenum rated: UL-2043) Operating Humidity 10%-95% Non-Condensing Operating temperatures: 0°C to 50°C Active Cooling/Fans, acoustic noise: 39.5 dBA at 25C
Power Requirements	IEEE802.3bt-type4 PoE++
Power Consumption	Up to: 72W (26W + 11.5W per RM)
Dimensions	14.9" W x 12.64" H x 4.06" D (378.7 mm W x 321.1 mm H x 102.5 mm D)
Weight	21.7 lbs (9.85 kg)
RP2000	
Environmental	Operating Temperatures:0°C to 50°C (Plenum rated: UL-2043) Operating Humidity: 10%-95% Non-Condensing
Power Requirements	802.3at PoE+
Power Consumption	22W Typical / 25.5W Maximum
Dimensions	7.4" W x 9.25" H x 1.75" D (188mm W x 235mm H x 45mm D)
Weight	2.6 lbs (1.2 kg)
RP2100	
Environmental	Operating Temperatures: -40C to 60°C
Power Requirements	802.3at PoE+
Power Consumption	22W Typical / 25.5W Maximum

Table C-1. Environmental and Physical specifications *(continued)*

Dimensions	9.3" W x 9.1" H x 3.0" D (236mm W x 230mm H x 76mm D)
Weight	8 lbs (0.6 kg)

SPF/SPF+ specifications

The following table lists the SPF and SPF+ specifications required for the Baseband Controller.

1G SFP LC SX Transceiver; 220M to 1K M
1G SFP LC LX transceiver, 550M 10K M
10G SFP+ LC SR Transceiver; Multi mode 26M to 300M
SFP-10G-LR Transceiver; Single mode 10KM
10G Direct attach SFP+ cable; Twin ax Cable; 7M (must be compatible with HP & Cisco switches

Appendix D

Field Replaceable Units

This appendix contains instructions for replacing Baseband Controller modules and Radio Points in the ONECELL system.

FRU overview	D-2
Replacing Baseband Controller modules	D-2
Replacing RP5100 series Radio Points	D-16
Replacing RP5100i RF modules	D-47
Replacing RP2000 series Radio Points	D-52
RP post-replacement verification	D-85

FRU overview

Field Replaceable Units (FRUs) are modules that can be replaced on-site in case of equipment failure. On-site and off-site activities are required when replacing modules. The off-site activities are achieved by using DMS.

This appendix contains details for replacing Baseband Controller (BC) modules and Radio Points (RP).

Replacing Baseband Controller modules

The following procedure provides instructions for replacing the ONECELL Baseband Controller (BC) module in a live network environment.

This procedure is divided into four sections:

- Prerequisites
- Off-site activities
- On-site activities
- Post-Install Verification

Prerequisites

The following table contains a checklist of prerequisites for replacing a BC.

Step	Prerequisite	Completed
1	UDEF file for DMS import	
2	SSH password	
3	Replacement ONECELL BC module	
4	Laptop for Web GUI access	
5	Config.tar file containing operator information **Note:** This file should be saved on the Laptop that will be used for WebGUI access.	
6	License file (if applicable) **Note:** This file should be saved on the Laptop that will be used for WebGUI access.	

Step	Prerequisite	Completed
7	Configuration details for WebGUI commissioning **Note:** These parameters are derived from the failed unit being replaced.	
8	Ethernet cable **Note:** Required for connecting the laptop to the ONECELL Baseband Controller Management port	
9	DMS FTP IP address	

Off-site activities

Before replacing the BC module, import a new EDF file to the DMS. This file contains the BC MAC address and HeMs password specific to the new BC.

1. Access the FTP location on DMS using ftp protocol, port 2100.
2. Upload the EDF file to */appdata/dms/import/factory*.
3. Access the DMS Network console from a supported Web Browser.

   NOTE: The DMS GUI supports Microsoft Edge 81 and later, Google Chrome 81 and later, and Mozilla Firefox Quantum 68 and later.

4. Enter the IP address for the Network Management portal.

   `http://<IP Address DMS server>/networkconsole`

   The Sign In dialog box displays.

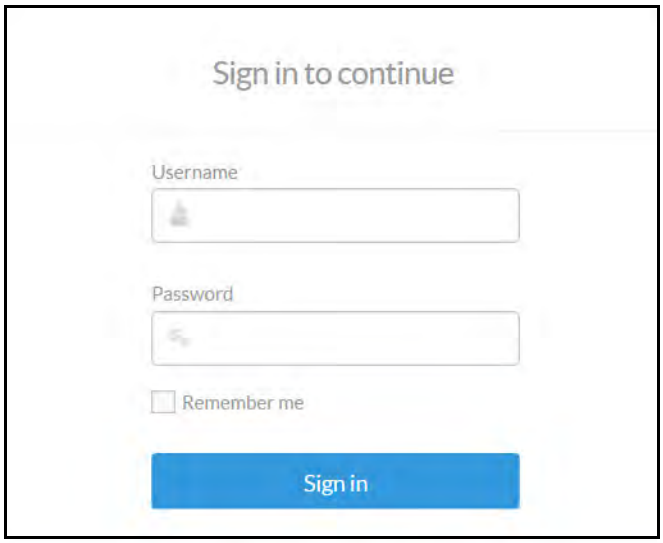

5. Enter Username and Password. The Search Device screen displays.

6 Enter the device Mac ID.

The Network Management Portal opens.

7 Select Import tab located in the left margin of the Device console.

8 Select File Import.

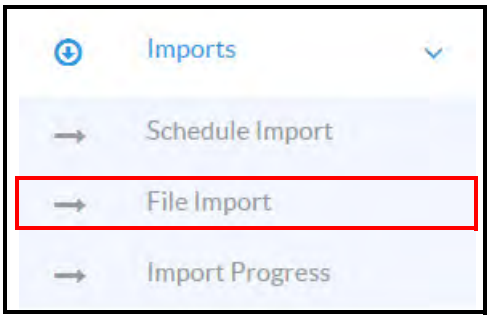

9 Browse and select the desired import file. The EDF file format is xml.

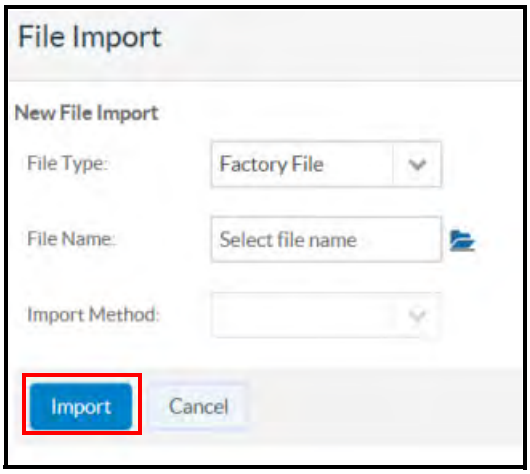

10 Click **Import**.

11 Click **Import Progress**. Wait for the import to be completed.

Import Progress

File Type	Operation/File Name	Import Method	Start time	End time	Import Status		Devices Impacted
File Import	uedf-factory-NW-0005B9A10_Sim_CU.xml	FACTORY	2015-05-19 18:49:11 IST		In Progress	View Details	
File Import	servicesetting_ServiceSettings_new.xml	COMPLETE	2015-05-19 18:38:33 IST		In Progress	View Details	
File Import	servicesetting_ServiceSettings_new_20150429145834.xml	AUTO	2015-05-16 00:14:35 IST		In Progress	View Details	2
File Import	servicesetting_ServiceSettings_new.xml	AUTO	2015-05-15 22:49:20 IST		In Progress	View Details	
File Import	servicesetting_ServiceSettings_new.xml	AUTO	2015-04-30 11:32:00 IST		In Progress	View Details	112
File Import	servicesetting_ServiceSettings_new_20150429145834.xml	COMPLETE	2015-04-30 10:29:12 IST		In Progress	View Details	112

12 Click the Operational History icon in the upper right corner of the page.

The Operational History page displays. Check that the file import was successful.

Operational History

View 20 entries

Start Time	Category	Method	File Name	Operation Type	Operation Status			De
2015-05-15 18:16:08 IST	Proactive Scheduled Job	All	Shiva	Provision	Success	✔	View Details >	
2015-05-15 18:10:41 IST	Service Package		S1000 - 1.0.1.0-NR06-10	Service Package Save	Success	✔	View Details >	22
2015-05-15 18:04:56 IST	Service Package			Service Package Upgrade	Success	✔	View Details >	22
2015-05-15 17:02:14 IST	Reports	Pws Report Generation	FemtoLTE_CMAS.XML	Pws Report	Success	✔	View Details >	
2015-05-15 16:22:42 IST	Reports	Pws Report Generation	FemtoLTE_CMAS.XML	Pws Report	Success	✔	View Details >	
2015-05-15 13:05:17 IST	Service Package		S1000 - 1.0.1.0-NR06-10	Service Package Save	Success	✔	View Details >	
2015-05-15 13:01:20 IST	Service Package		S1000 - 1.0.1.0-NR06-10	Service Package Save	Success	✔	View Details >	22
2015-05-15 13:00:11 IST	File Import	FACTORY	uedf-factory-RW-0005B9A200_Sim_RP.xml	FACTORY	Success	✔	View Details >	
2015-05-15 12:58:10 IST	File Import	FACTORY	uedf-factory-NW-0005B9A10_Sim_CU.xml	FACTORY	Success	✔	View Details >	
2015-05-15 08:30:02 IST	Purge	SPS Audit Report Purge		SPS Audit Report	Success	✔	View Details >	
2015-05-15 05:30:06 IST	Reports		0005B9-LTEWiFiSC_Delta-device-config-2015-05-15-05-30.txt	Device Delta Report	Success	✔	View Details >	
2015-05-15 05:30:04 IST	Reports	Pws Report Generation	FemtoLTE_CMAS.XML	Pws Report	Success	✔	View Details >	
2015-05-15 05:30:03 IST	Reports	SPS Audit Report Generation	SPS_AUDIT_REPORT_2015-05-15 05:30:02	SPS Audit Report	Success	✔	View Details >	
2015-05-15 05:30:02 IST	Reports	Device State Report Generation	Master-device-status-2015-05-15-05-30	Device State Report	Success	✔	View Details >	

13 Login to the Device console.

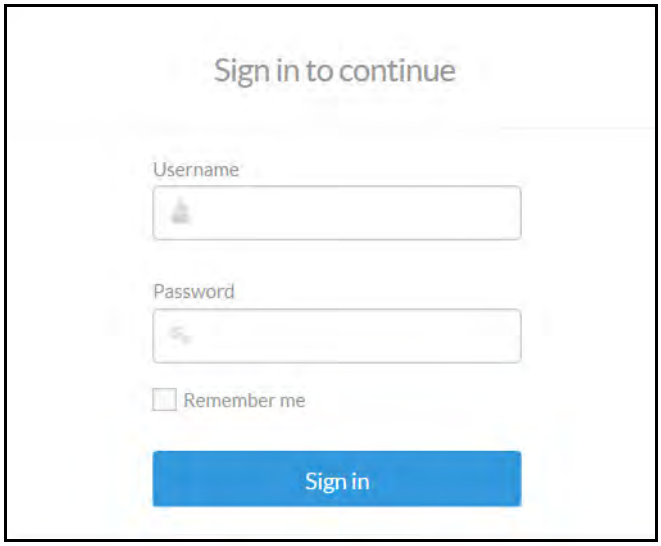

14 Enter the MAC ID of the replacement Baseband Controller.

NOTE: Your CommScope service engineer will provide the new BC MAC ID.

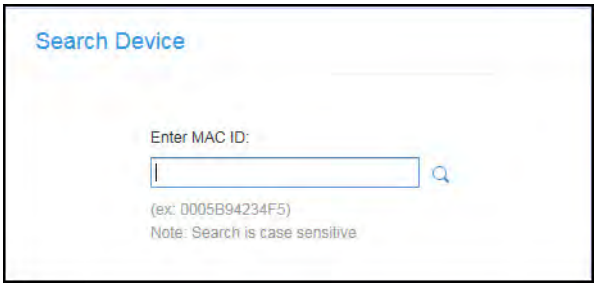

15 Select the Device configuration tab on the left margin.

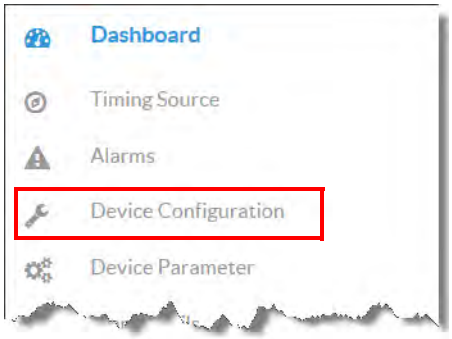

16 Configure the same parameters from the BC being replaced.

17 Select the Dashboard menu item.

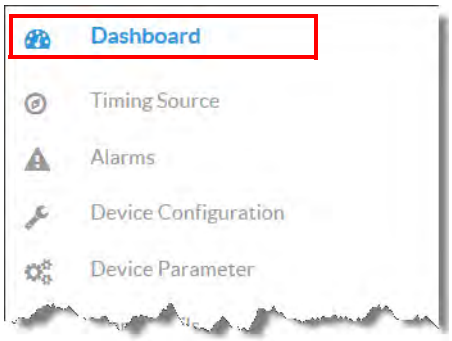

The Controller will display "Out of Service" until the On-site installation is completed.

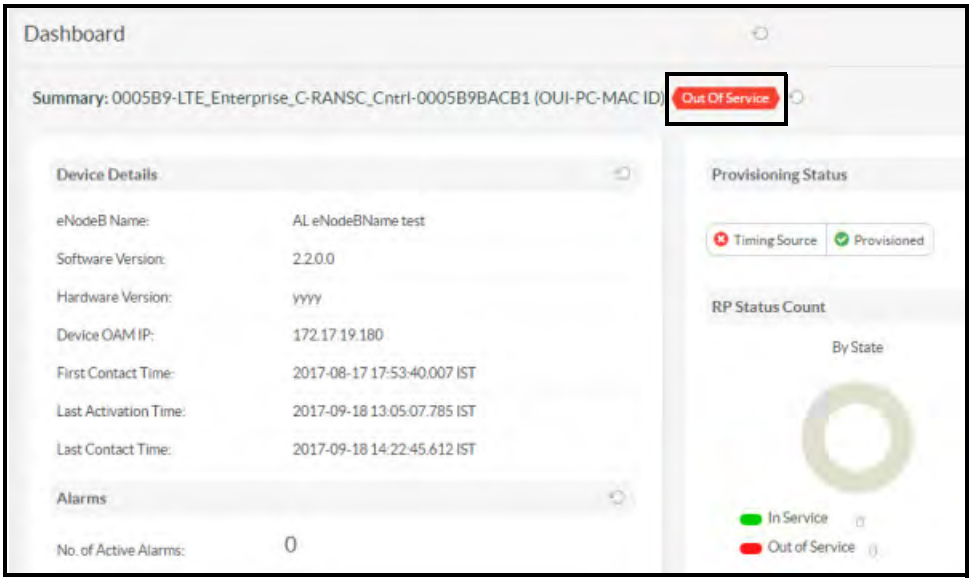

On-site activities

After the off-site activities are complete, you are ready to replace the BC module on-site.

1 Power off the ONECELL Baseband Controller.

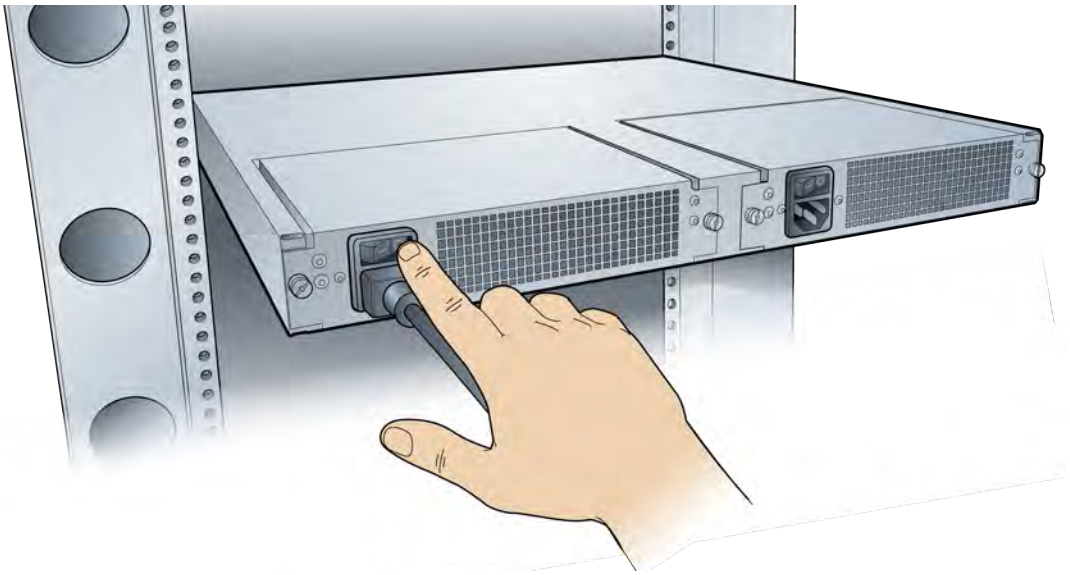

2 Make a note of the existing cables connected to the failed ONECELL BC.

3 Label the cables identifying the port locations on the BC. Disconnect the cables.

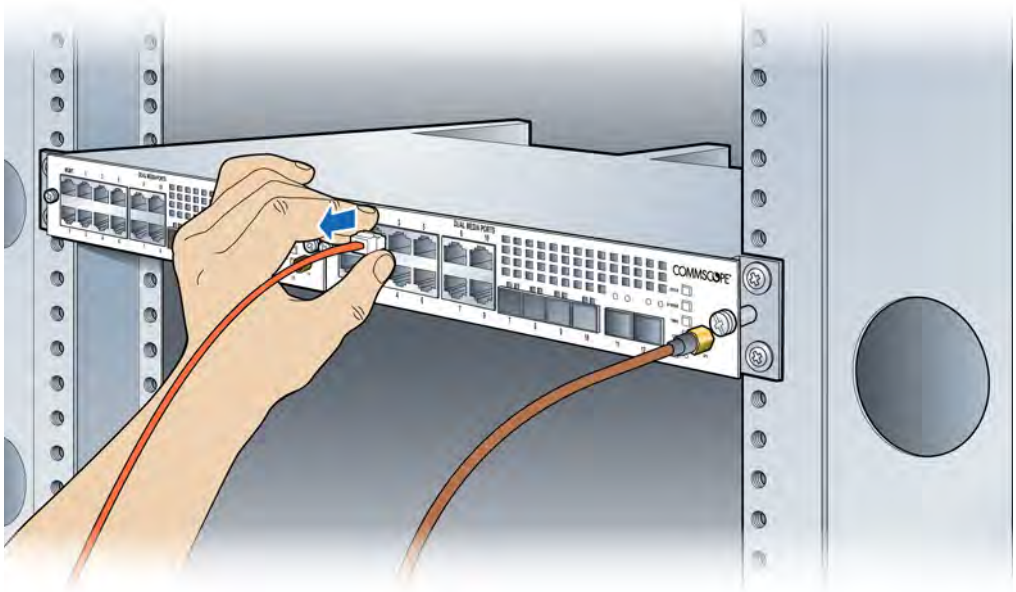

4 Remove the GPS antenna cable from the BC (if applicable).

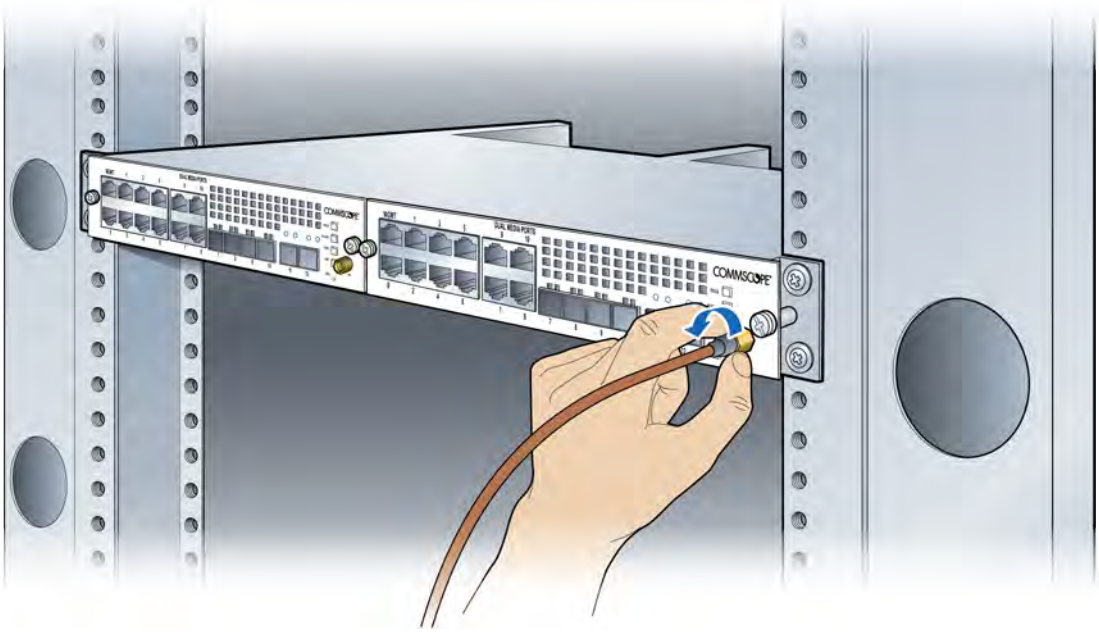

5 Turn the mounting screws on the BC front panel counterclockwise to loosen them and remove the BC module.

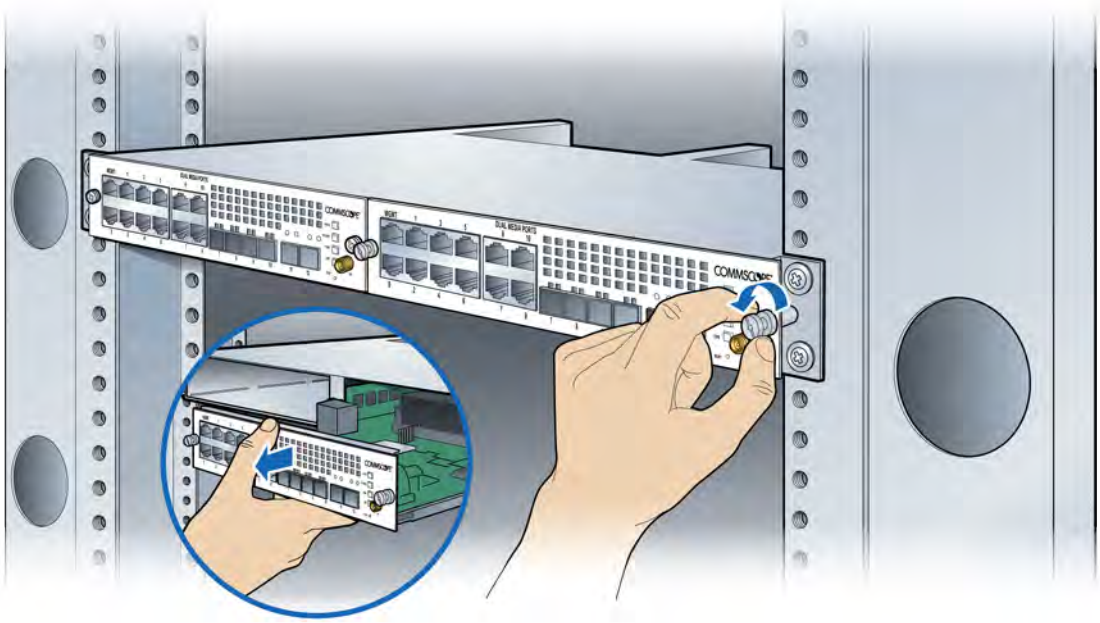

6 Insert the new BC module into the chassis and tighten the mounting screws.

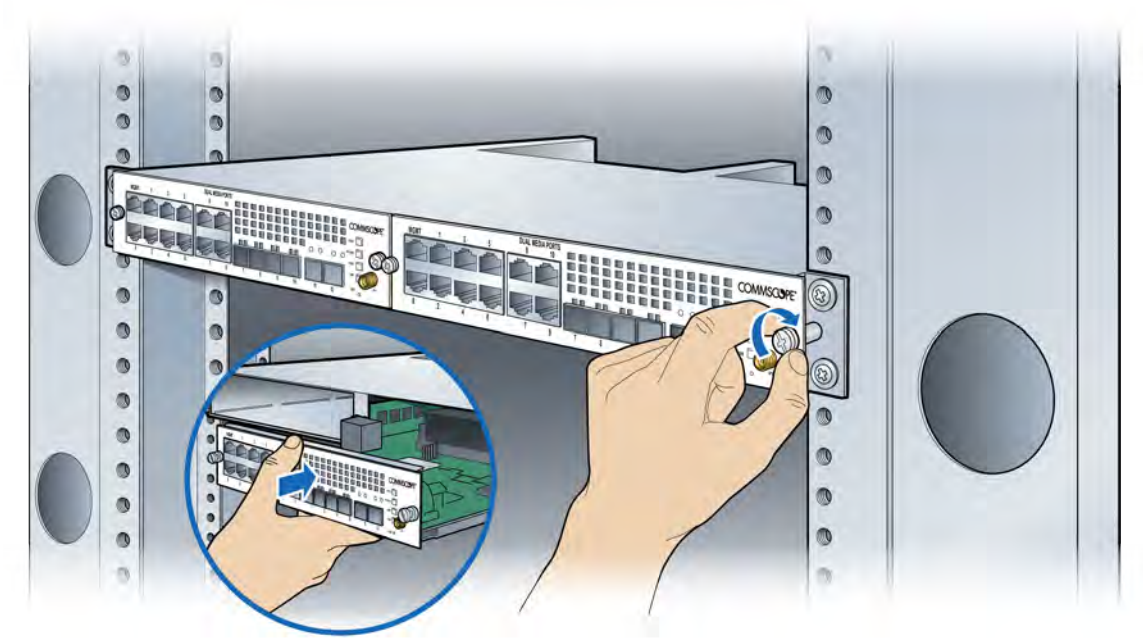

7 Re-connect the cables as noted in step 3.

8 Power on the controller.

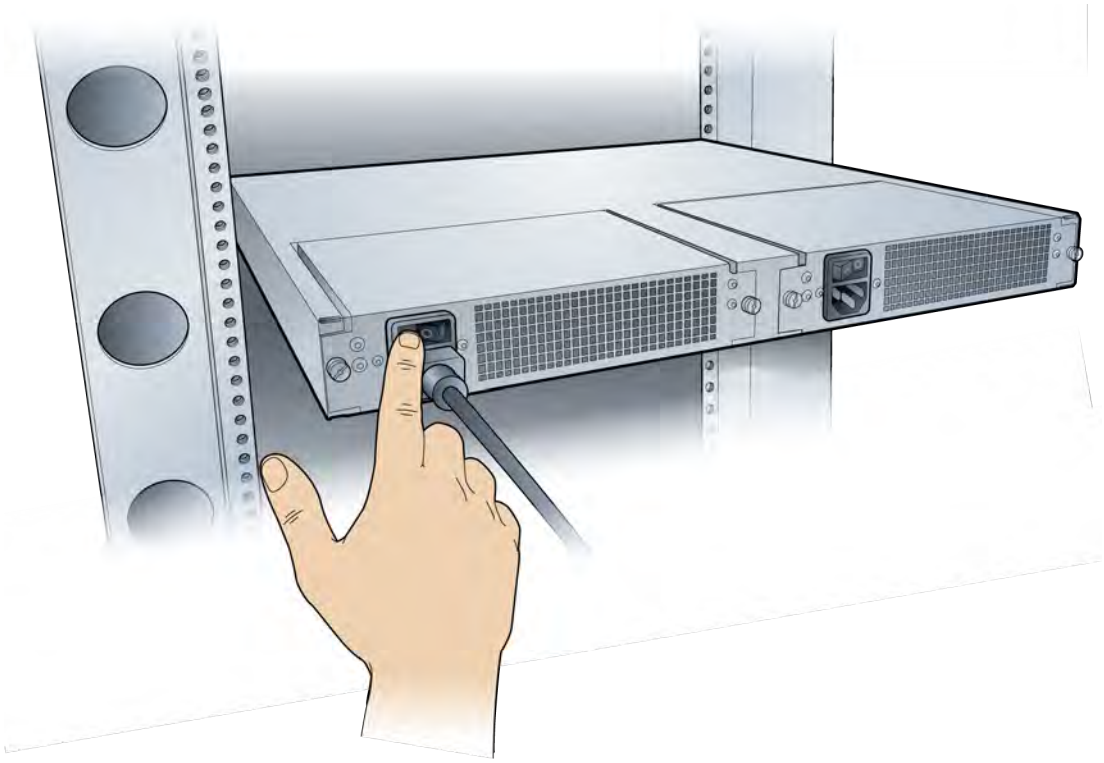

9 Configure the BC.

Post-Install Verification

On-site

The operational state of the ONECELL system can be determined by the LED status on the BC's front panel. Additional information can be attained from the WebGUI status screens.

Off-site

1 Open a supported Web browser.

NOTE: The DMS GUI supports Microsoft Edge 81 and later, Google Chrome 81 and later, and Mozilla Firefox Quantum 68 and later.

2 Enter the IP address for the Device Management portal.

```
http://<IP Address DMS server>/deviceconsole
```

The Sign In dialog box displays.

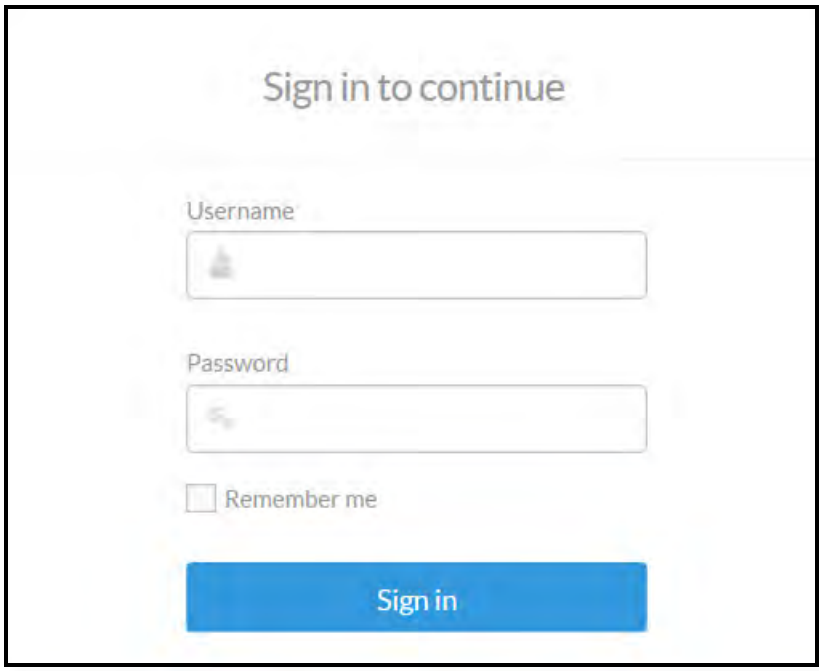

3 Enter Username and Password. The Search Device screen displays.

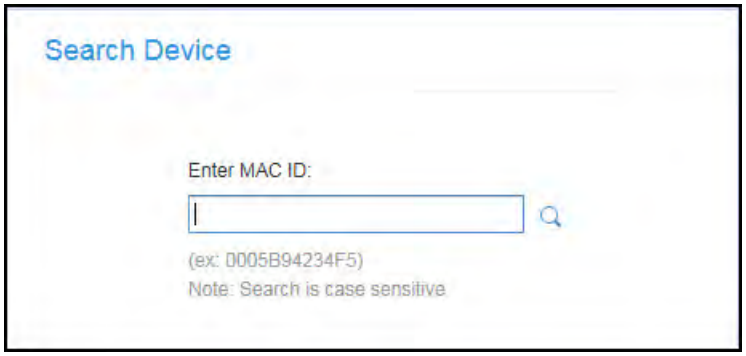

4 Enter the MAC ID of the new BC.

The BC Dashboard displays. The Summary at the top of the page should show "Ready."

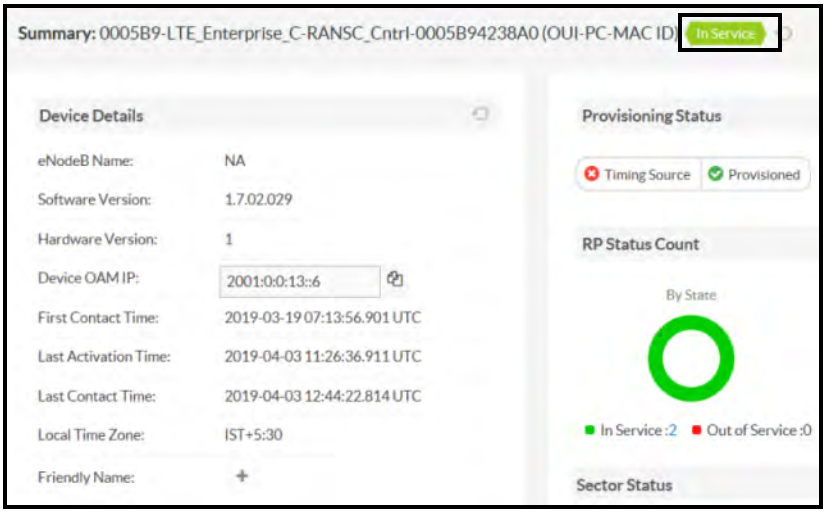

NOTE: Provision the remaining Device configurations to align with the failed BC configuration on the DMS Device Configuration page.

5 Scroll to the bottom of the page to view the Device PnP status.

If all of the PnP boxes have green checks, the BC replacement is successful. Stop here.

If one or more of the PnP boxes are red, those activities failed. Go to the Device PnP page to identify the failed activity.

Replacing Radio Points prerequisites and on-site activities

Prepare the network for the Radio Point replacement.

- Prerequisites
- On-site activities

Prerequisites

The following table contains a checklist of prerequisites for replacing an RP.

	Prerequisite
	SSH password
	Replacement ONECELL RP module

	Prerequisite
	Laptop for Web GUI access
	Ethernet cable **Note:** Required for connecting the laptop to the ONECELL Baseband Controller Management port

On-site activities

Before replacing the RP, delete the RP from the system using the WebGUI.

1 Connect the Ethernet cable to the MGMT port on the BC's front panel.

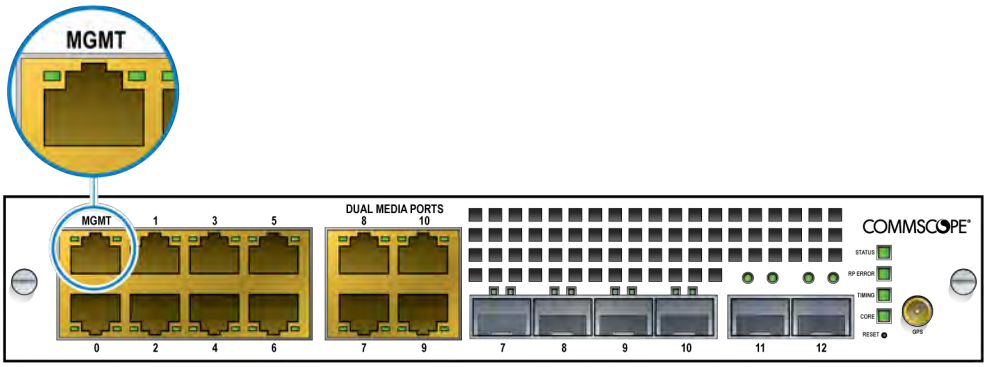

2 Open a supported browser.

3 Enter the IP address for the GUI, using the format below.

https://<IP address of Management Interface>:6002

Example:

`https://192.168.8.1:6002`

The Sign In dialog box appears.

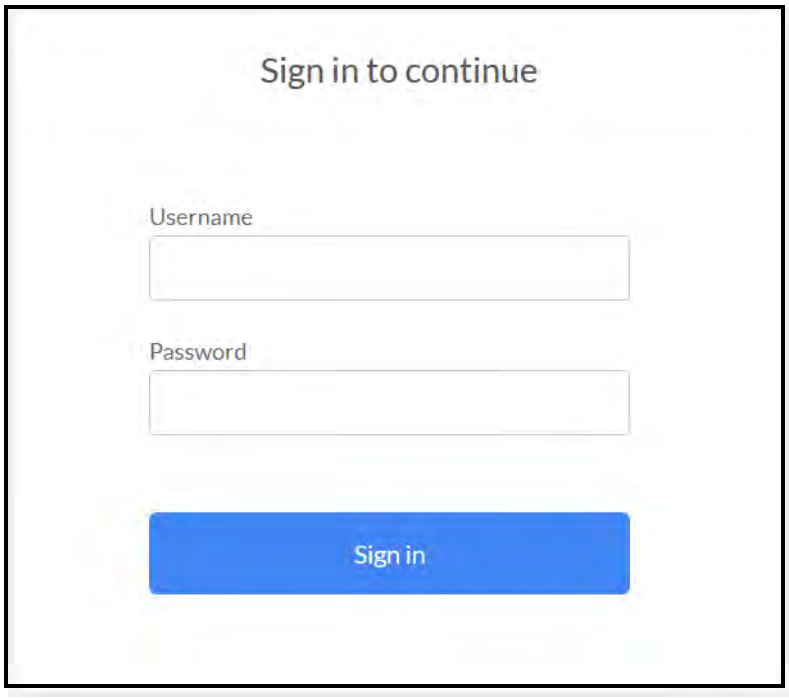

The Dashboard displays.

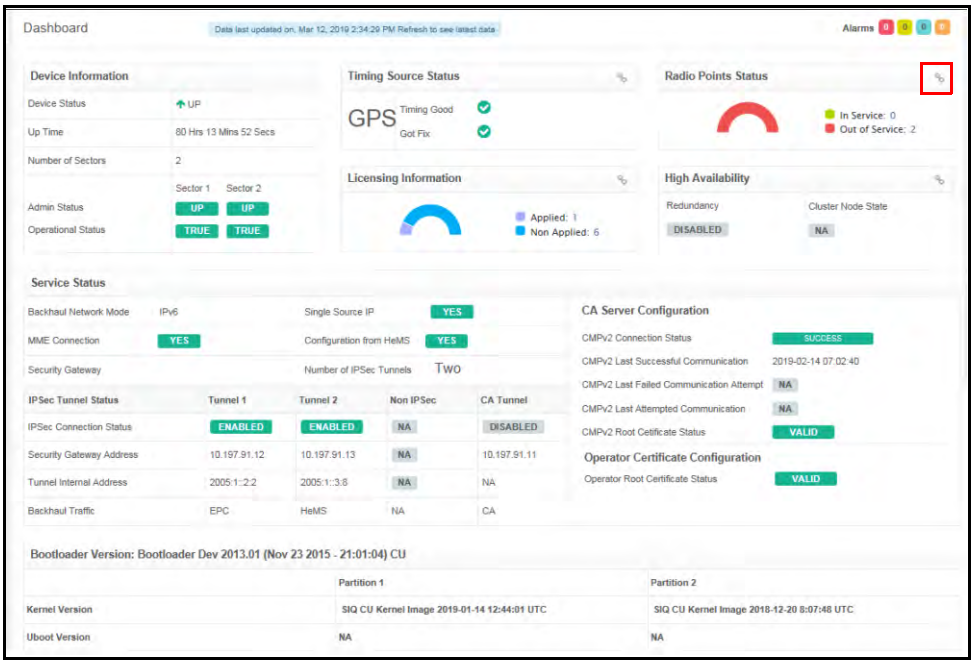

4 On the Dashboard, click the Radio Points link. The Radio Points Dashboard displays.

5 Click the RP Information tab.

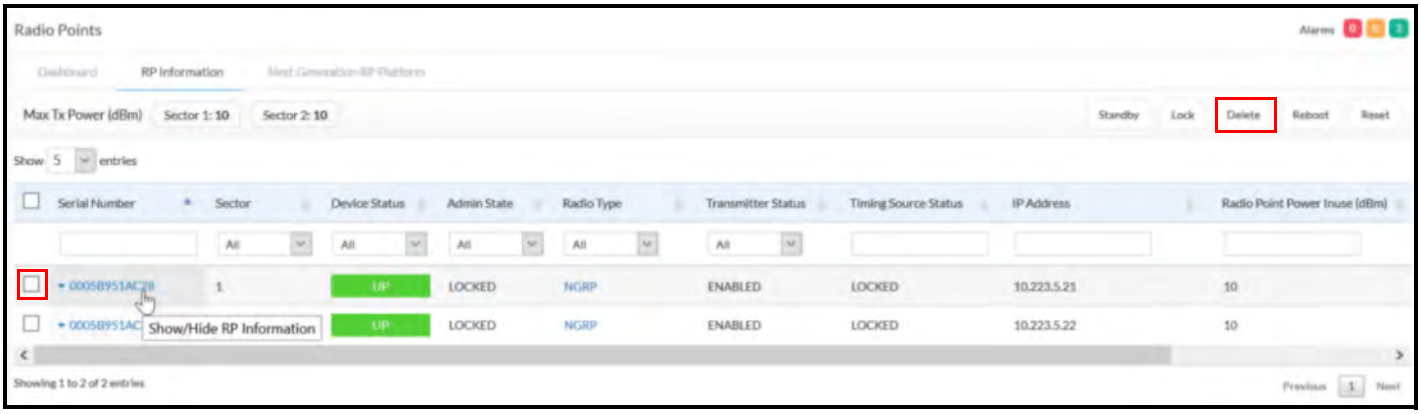

6 If one of the Radio Points is Down, select that RP by checking the box next to it.

7 Click **Delete**.

8 Check the Radio Point Information table to ensure the RP is deleted.

Replacing RP5100 series Radio Points

The following procedures provide instructions for replacing a ONECELL Radio Point (RP) module in a live network environment.

- Replacing a ceiling RP5100i (above tile)
- Replacing a flown mounted RP5100i

- Replacing a pole mounted RP5100i
- RP post-replacement verification

Replacing a ceiling RP5100i (above tile)

1 Remove the ceiling tile next to the mounted RP to allow access to the mounting hardware and Ethernet cable.

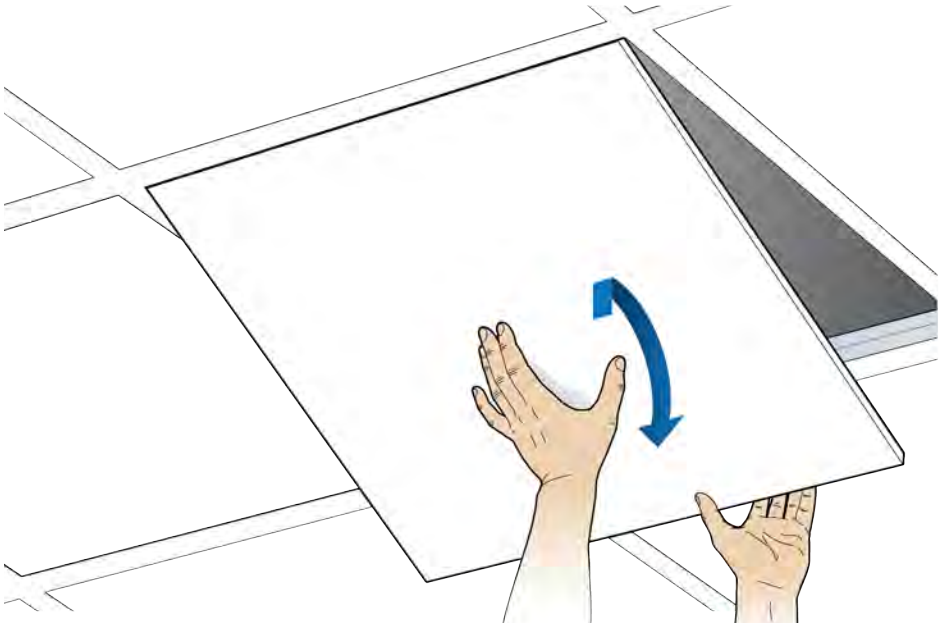

2 Remove the RP cover.

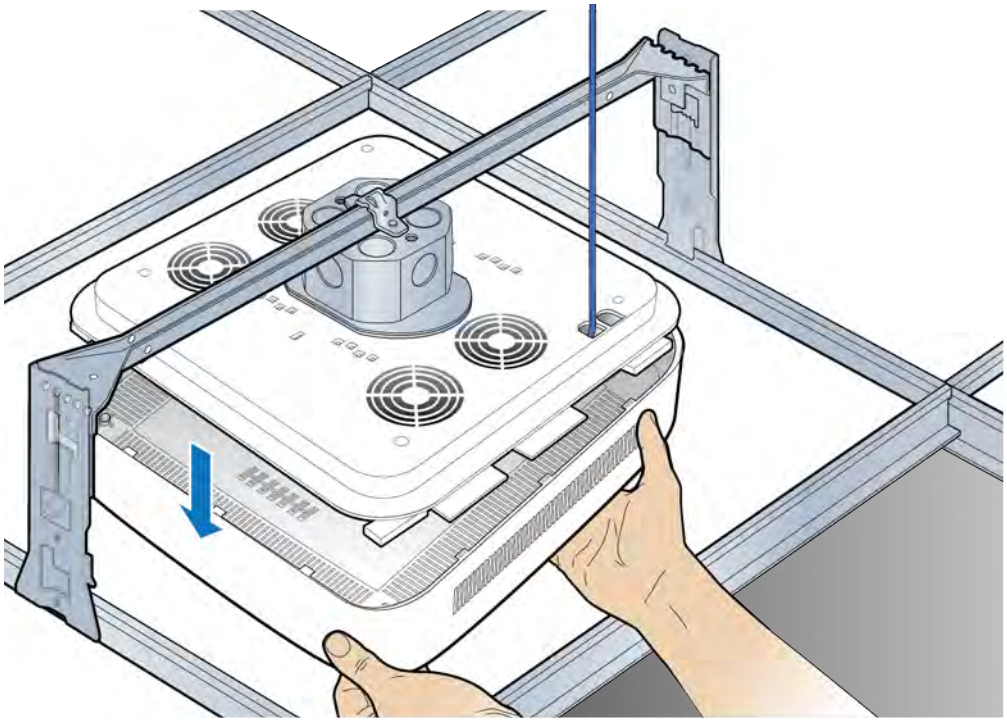

3 Disconnect the Ethernet cable.

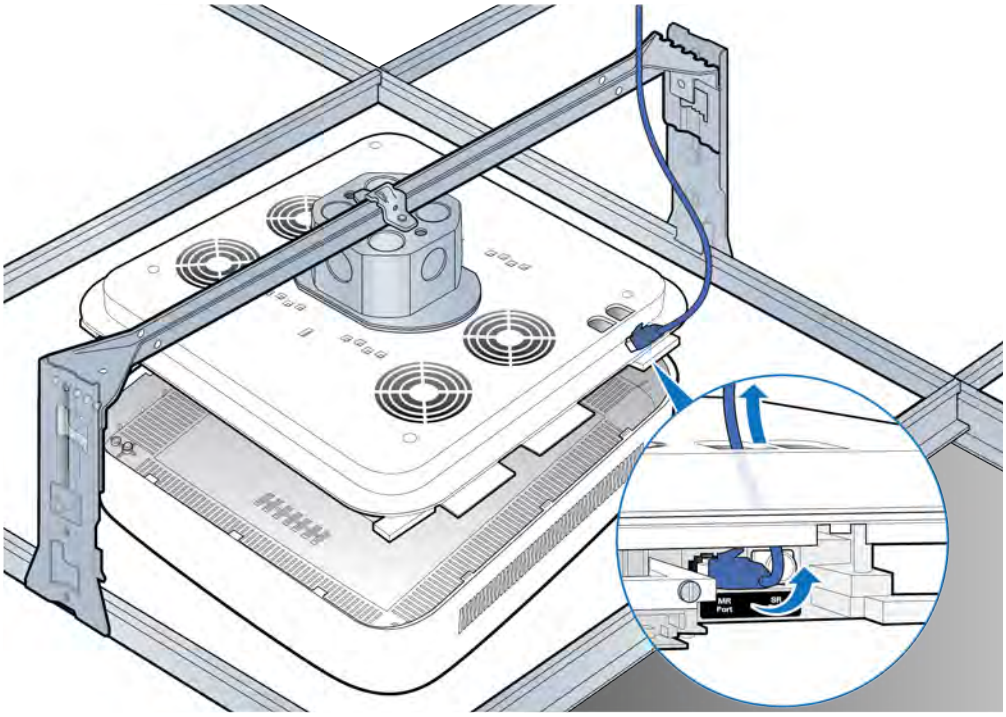

4 Replace the cover and twist the RP clockwise to remove it. Set the failed RP aside.

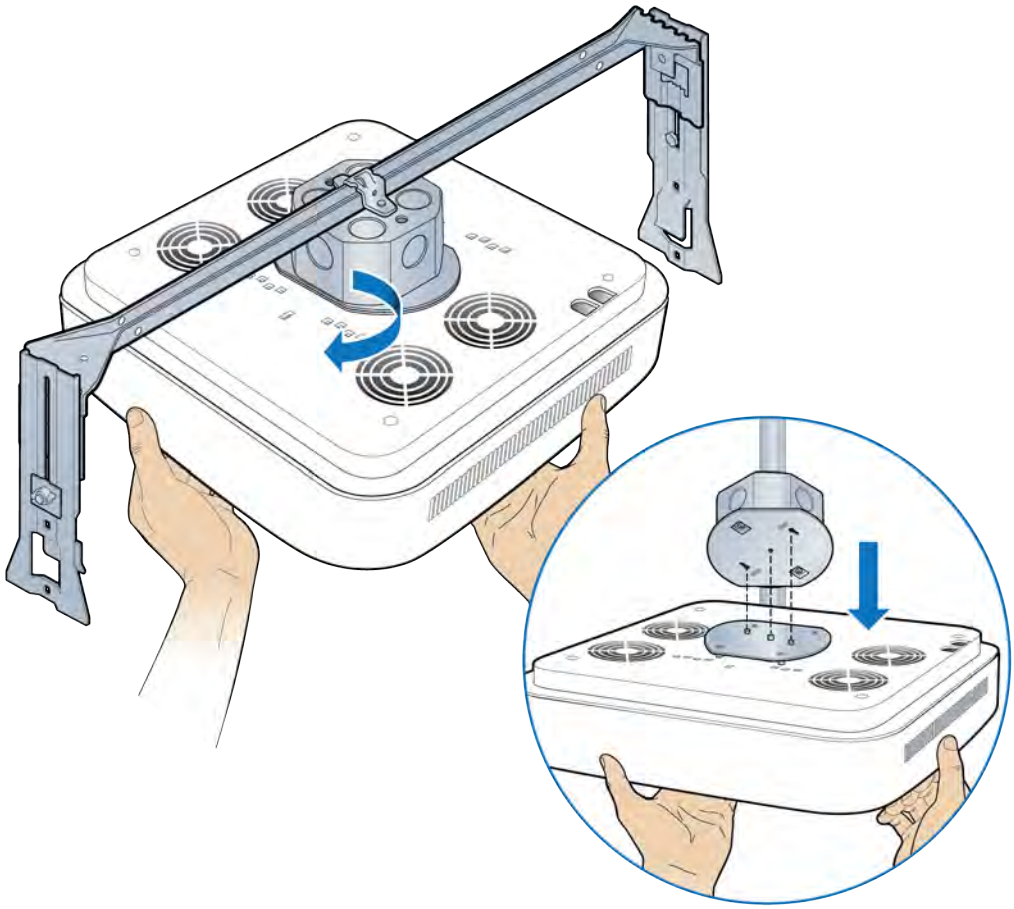

5 Attach the mounting plate to the replacement RP.

NOTE: Apply thread locking compound to the screws prior to installation.

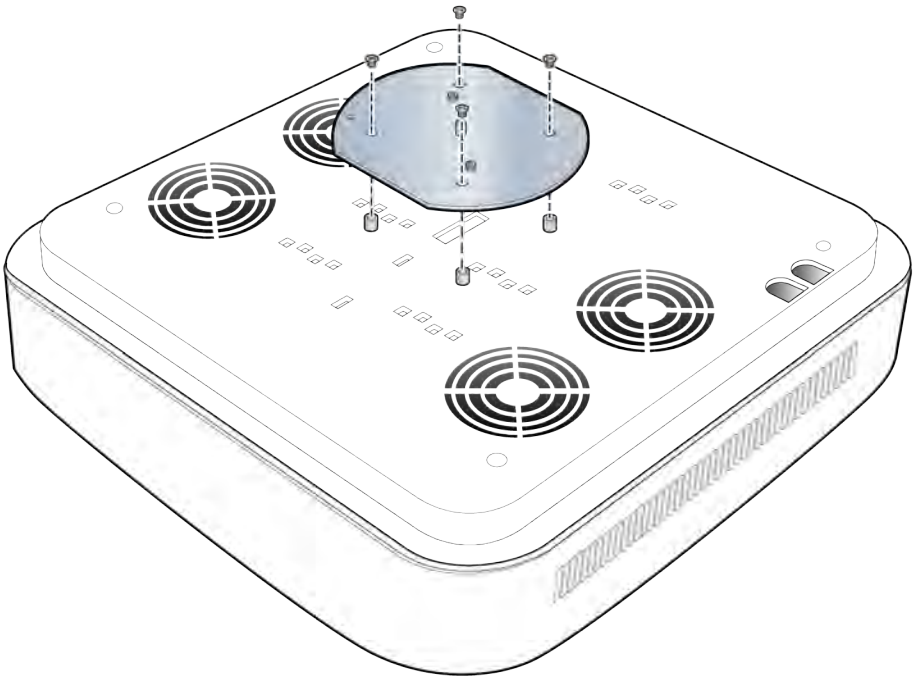

6 Attach the RP to the octagonal mounting plate and twist to engage.

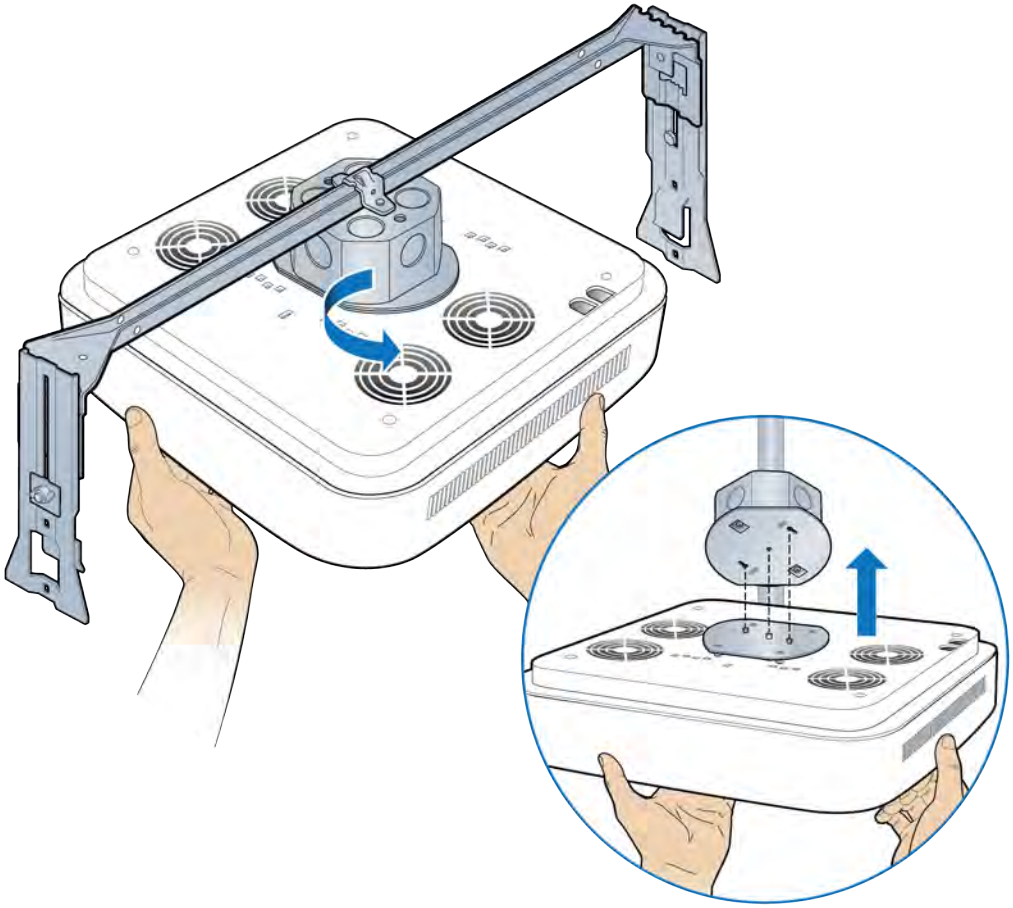

7 Remove the cover and connect the Ethernet cable to the MR port.

NOTE: The cover is attached to the RP with two lanyards.

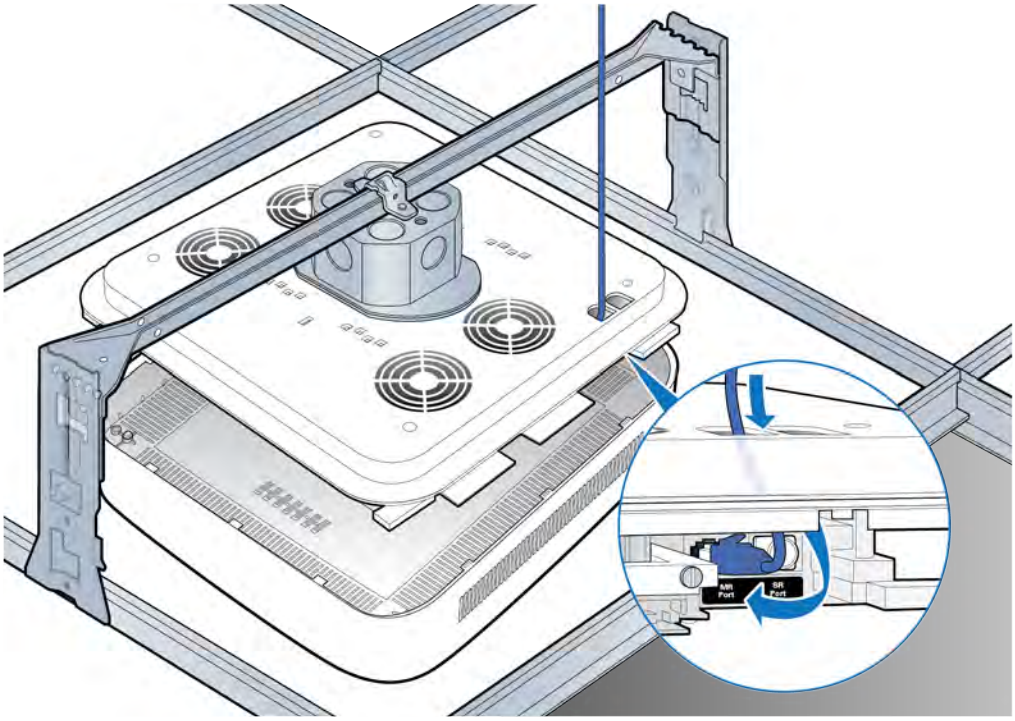

8 Attach the plastic cover to the RP.

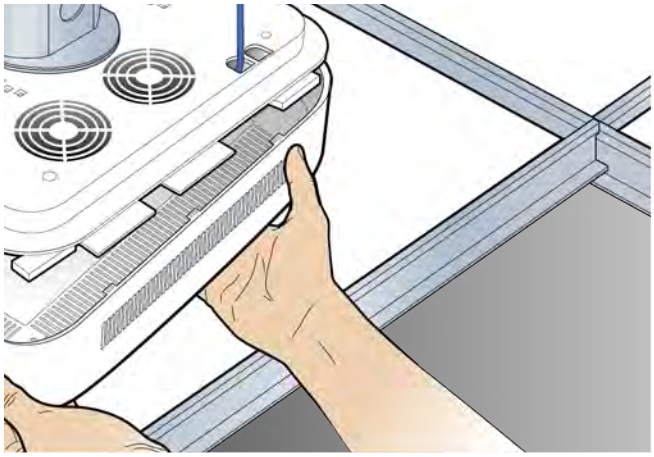

9 Replace the ceiling tile.

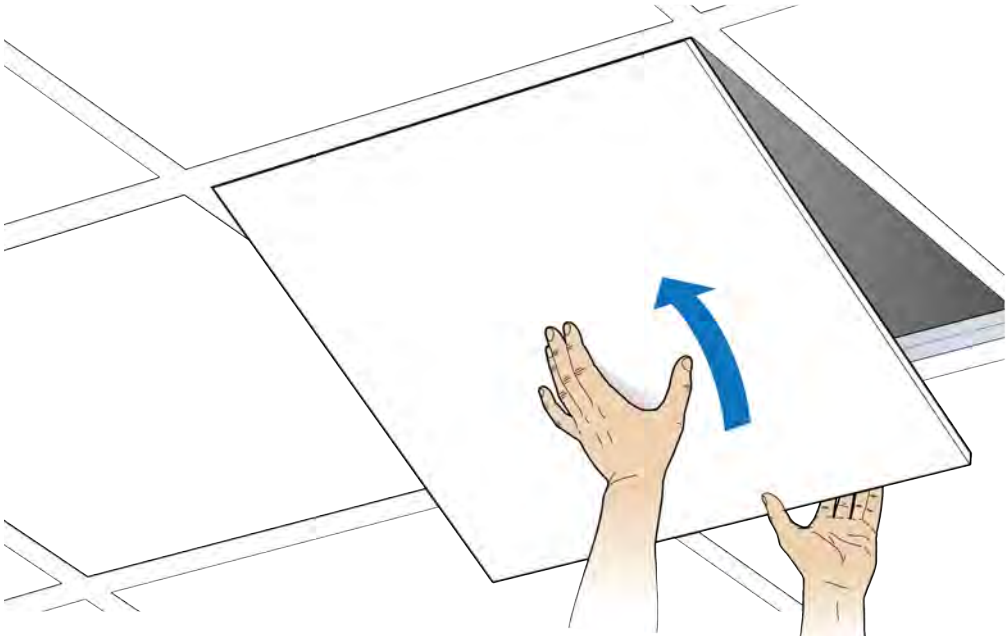

10 Verify the RP installation. See The operational state of the RP can be determined by the LED status on the RP. Additional information can be attained from the WebGUI status screens.

For verification procedures, see RP post-replacement verification.

Replacing a ceiling Indoor RP (on tile)

1 Remove the RP cover.

NOTE: The cover is attached to the RP with two lanyards.

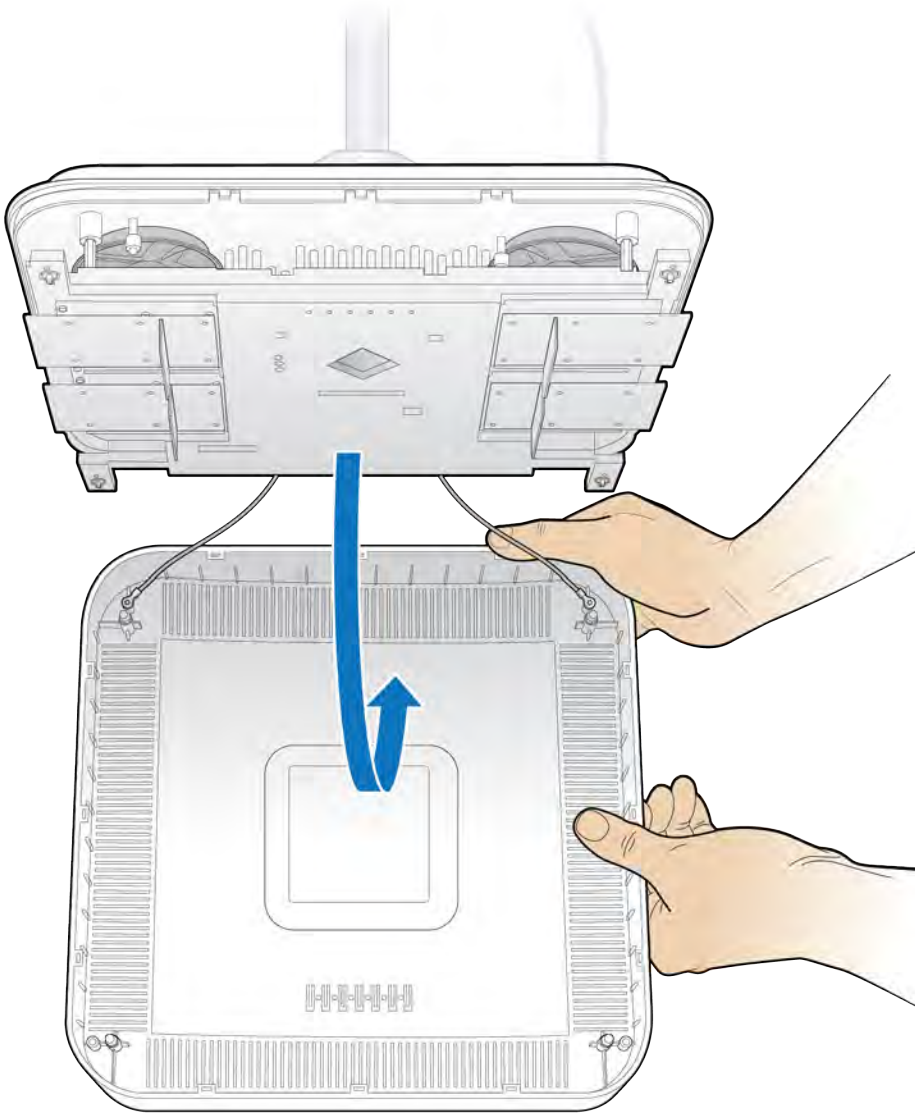

2 Disconnect the Ethernet cable from the RP.

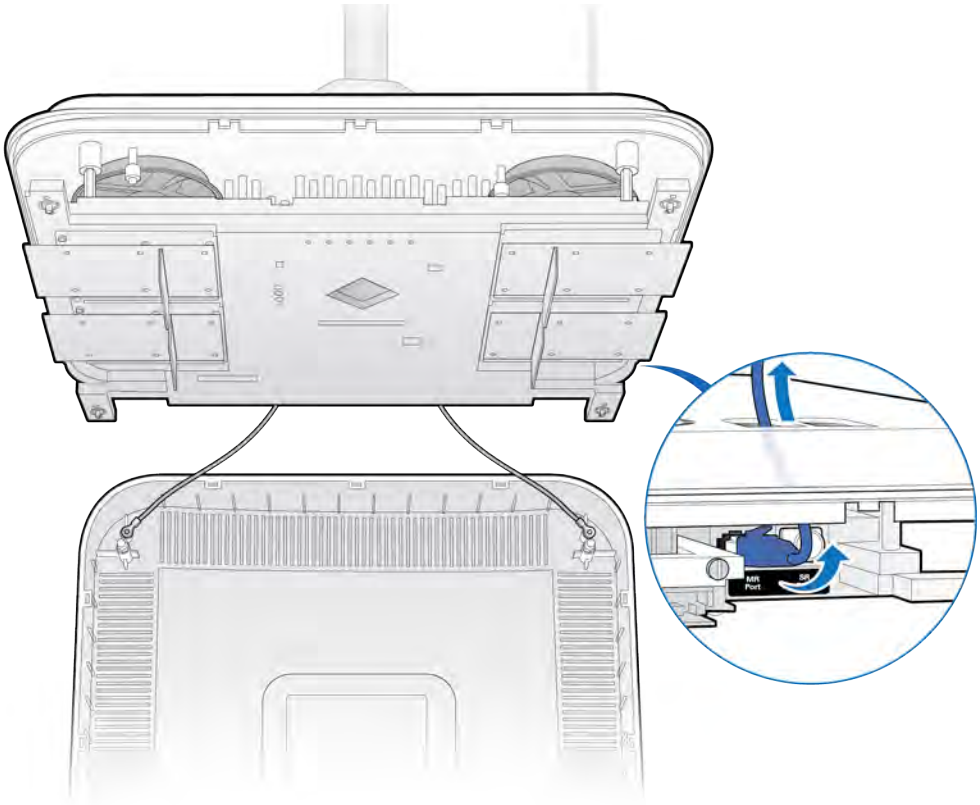

3 Replace the cover and twist the RP clockwise and remove the failed RP.

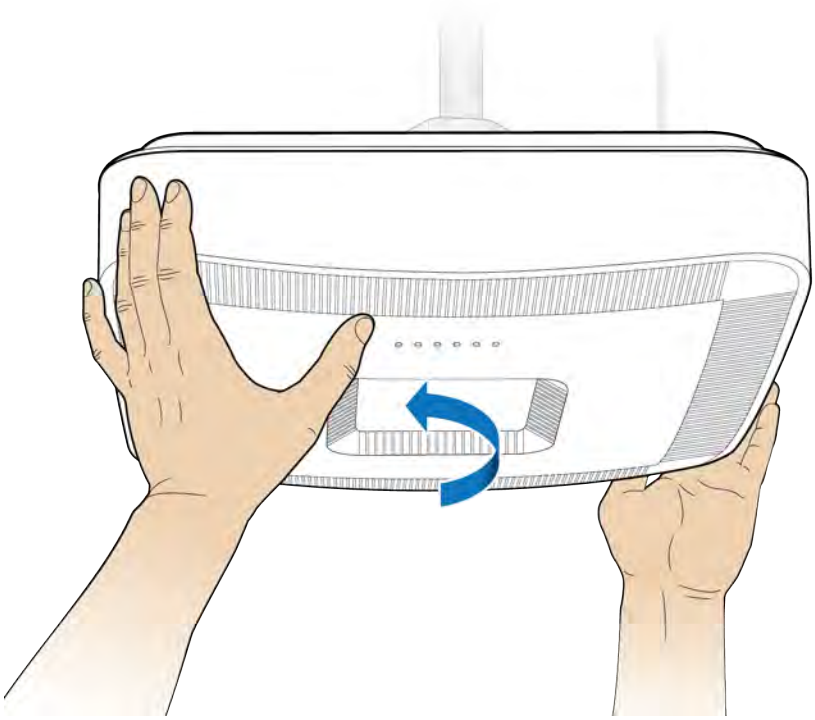

4 Attach the plate to the replacement RP.

NOTE: Apply thread locking compound to the screws prior to installation.

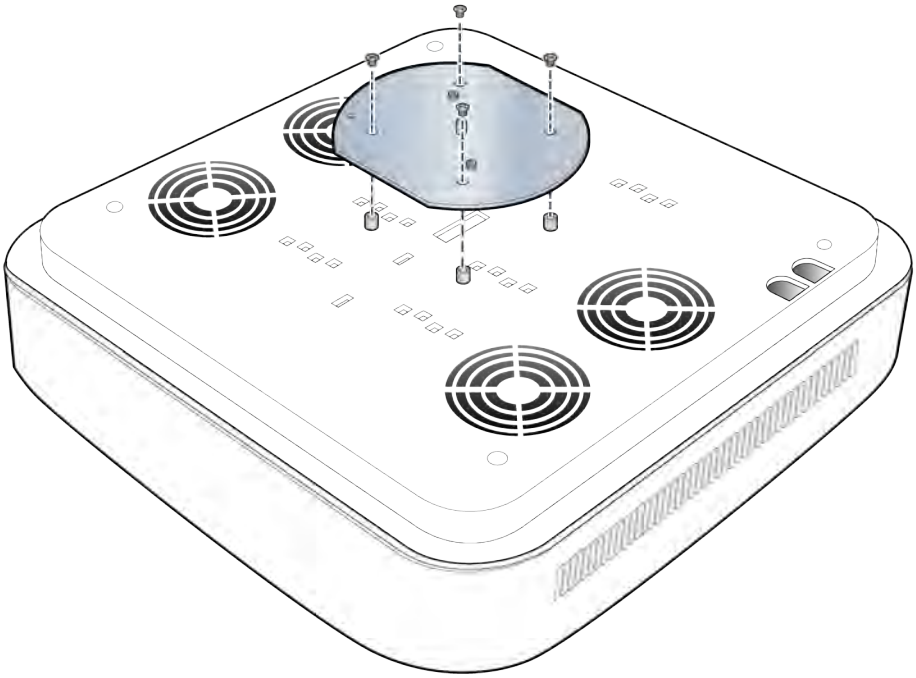

5 Attach the RP to the octagonal mounting plate.

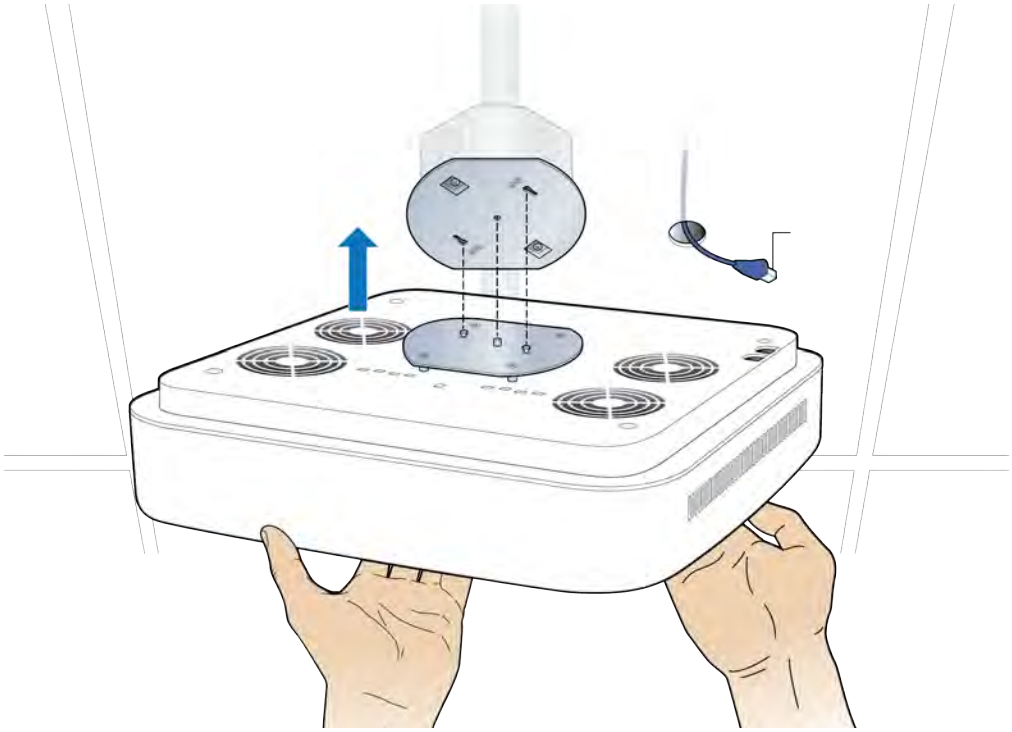

6 Secure the RP to the plate by twisting the RP counterclockwise.

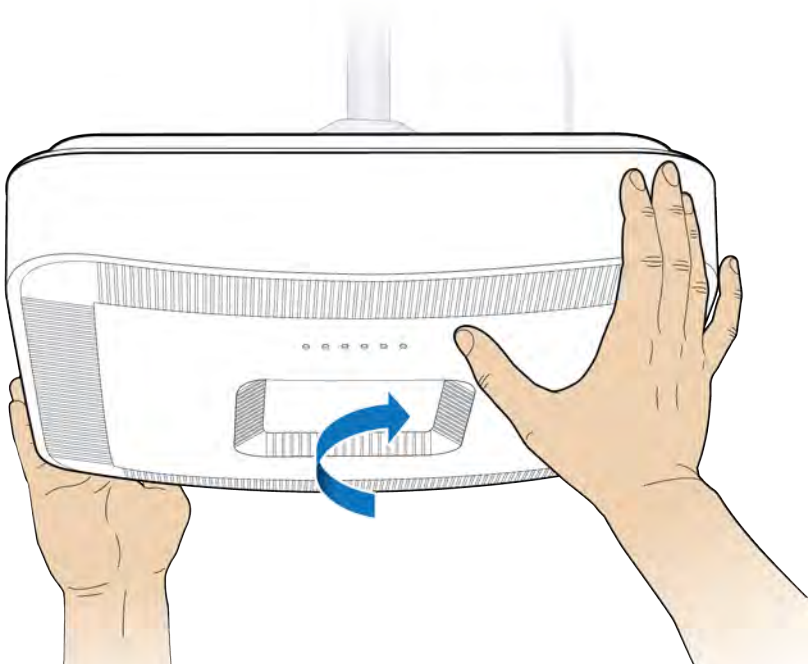

7 Remove the cover and connect the Ethernet cable to the MR port.

NOTE: The cover is attached to the RP with two lanyards.

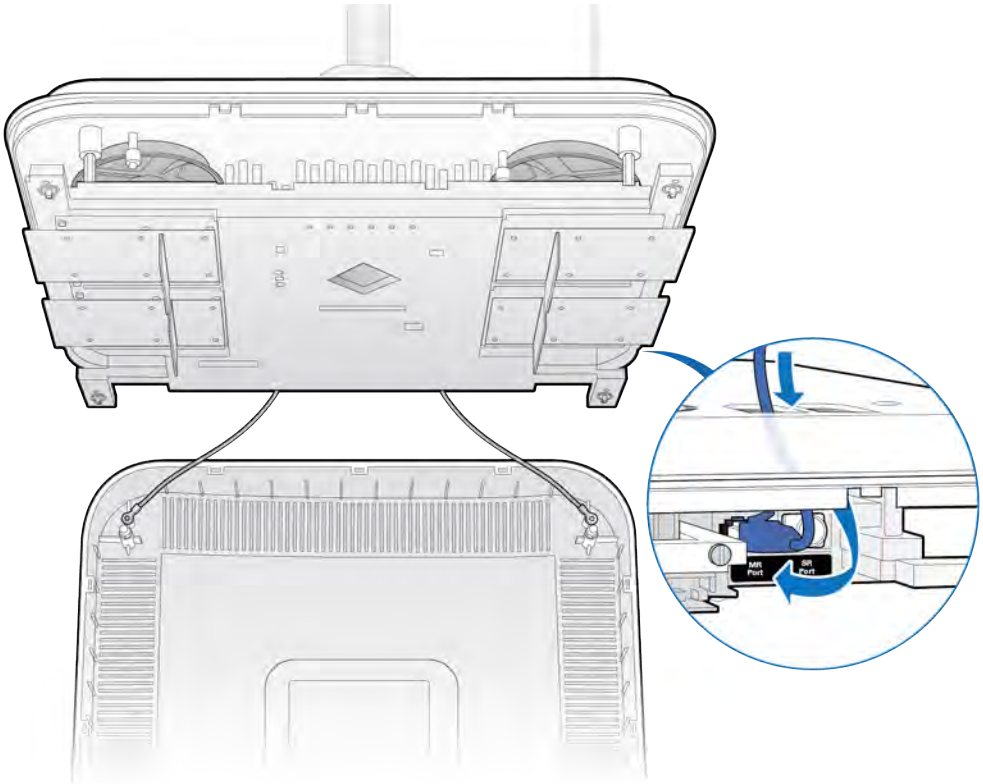

8 Attach the plastic cover to the Radio Point.

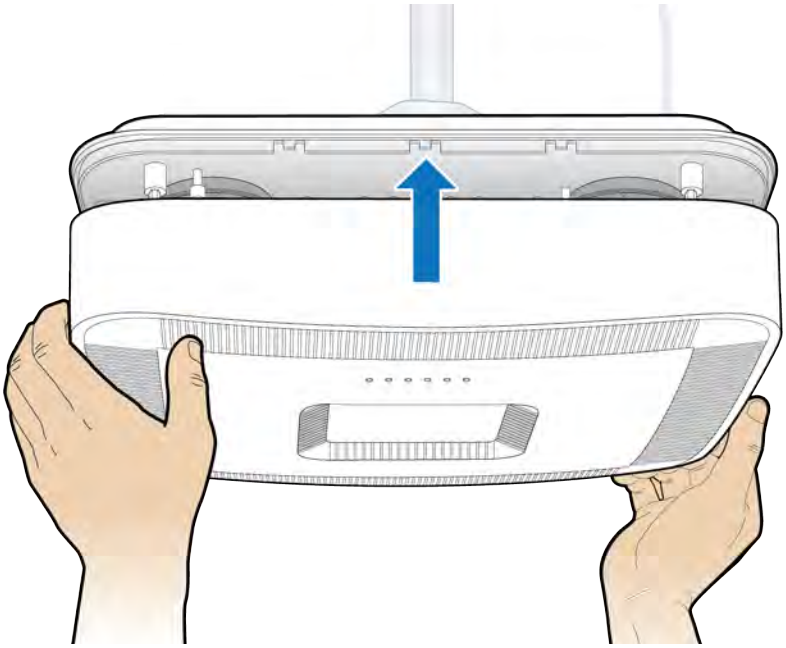

9 Verify the RP installation. See The operational state of the RP can be determined by the LED status on the RP. Additional information can be attained from the WebGUI status screens.

For verification procedures, see RP post-replacement verification.

Replacing a flown mounted RP5100i

1 Remove the RP cover.

NOTE: The cover is attached to the RP with two lanyards.

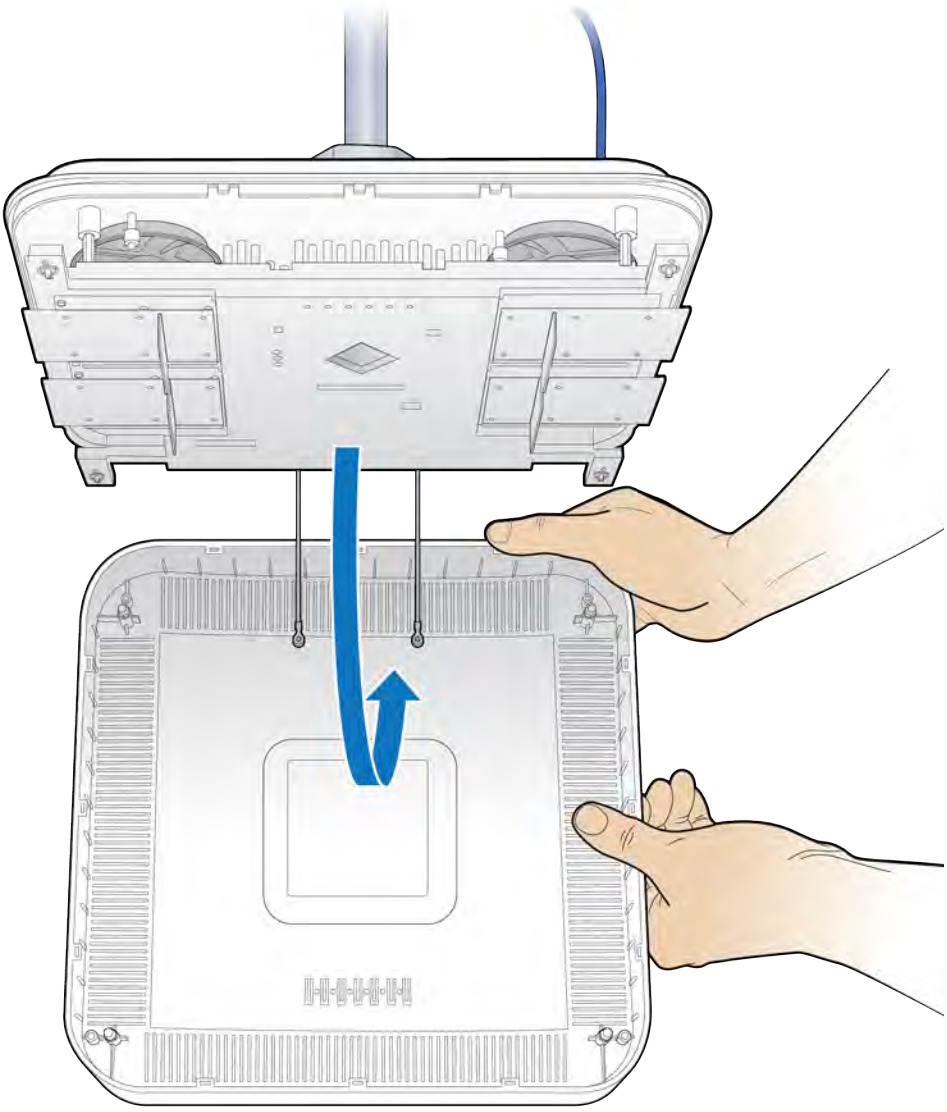

2 Disconnect the Ethernet cable.

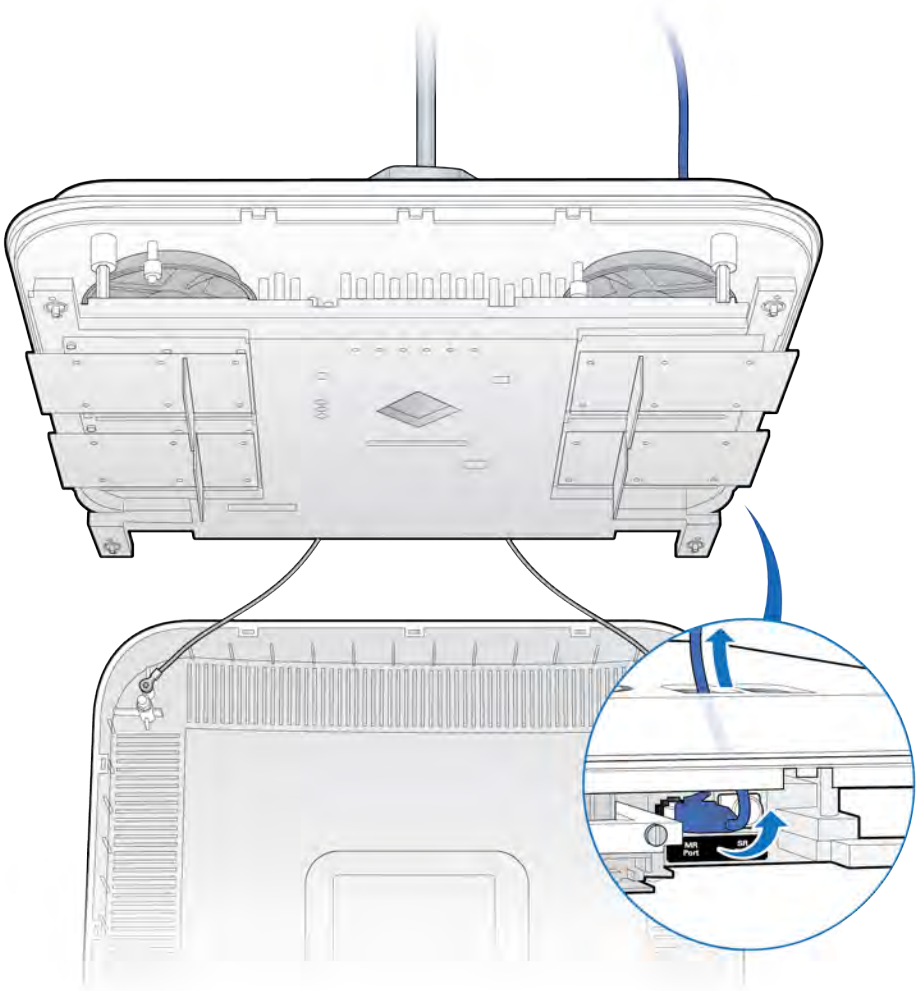

3 Replace the cover and twist the RP clockwise.

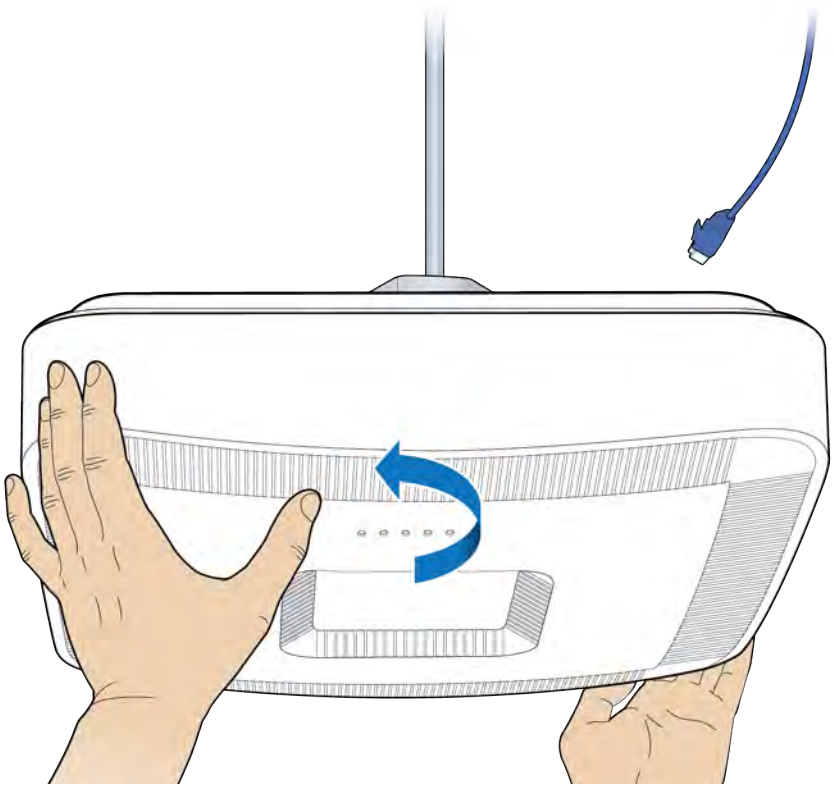

4 Remove the failed RP.

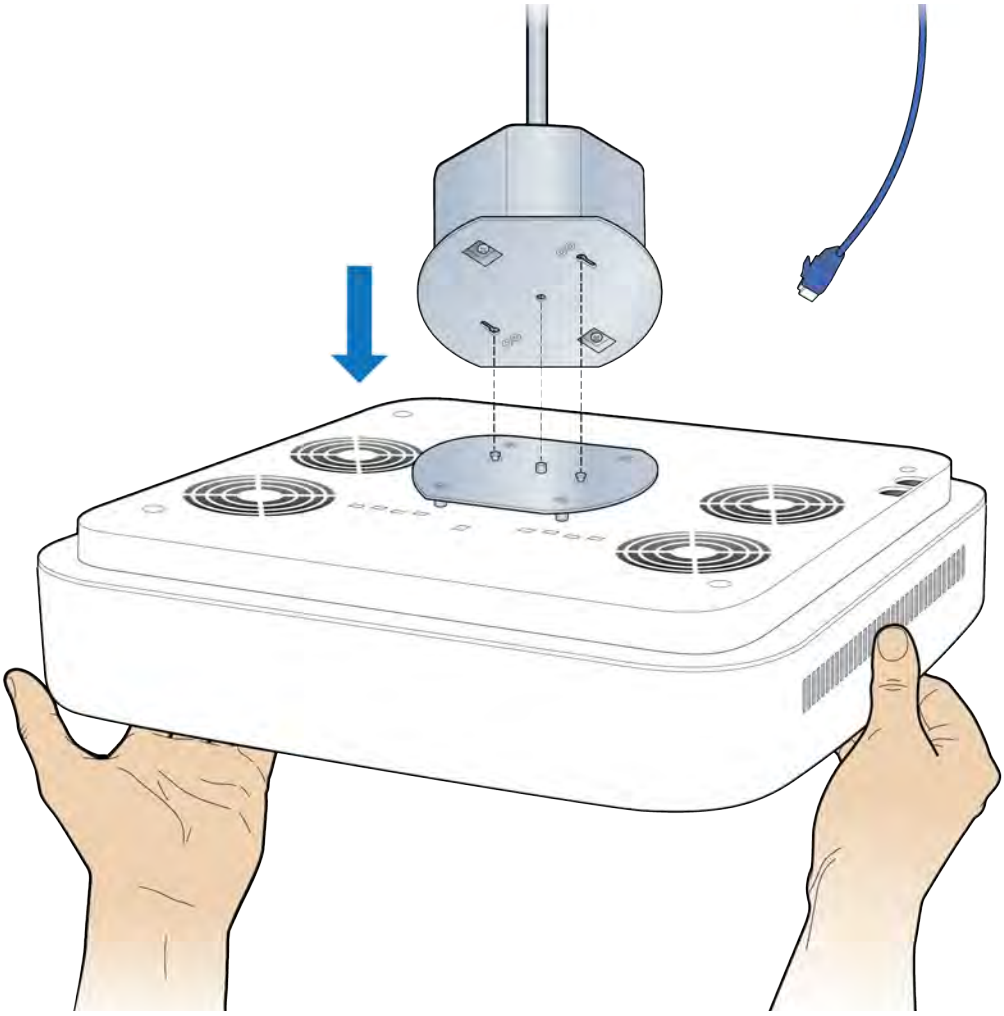

5 Attach the mounting plate to the RP.

NOTE: Apply thread locking compound to the screws prior to installation.

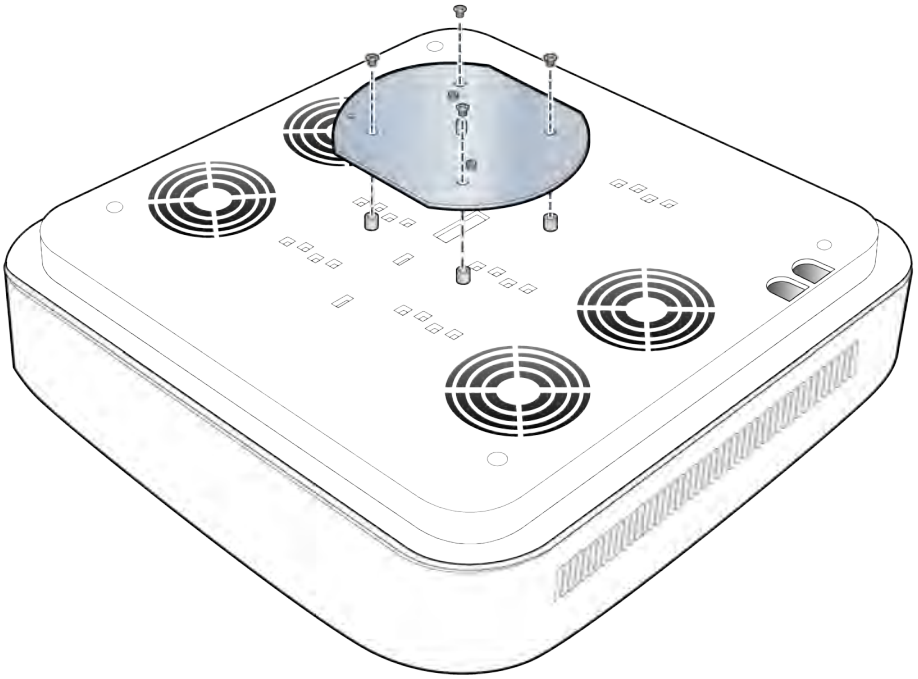

6 Attach the RP to the octagon box.

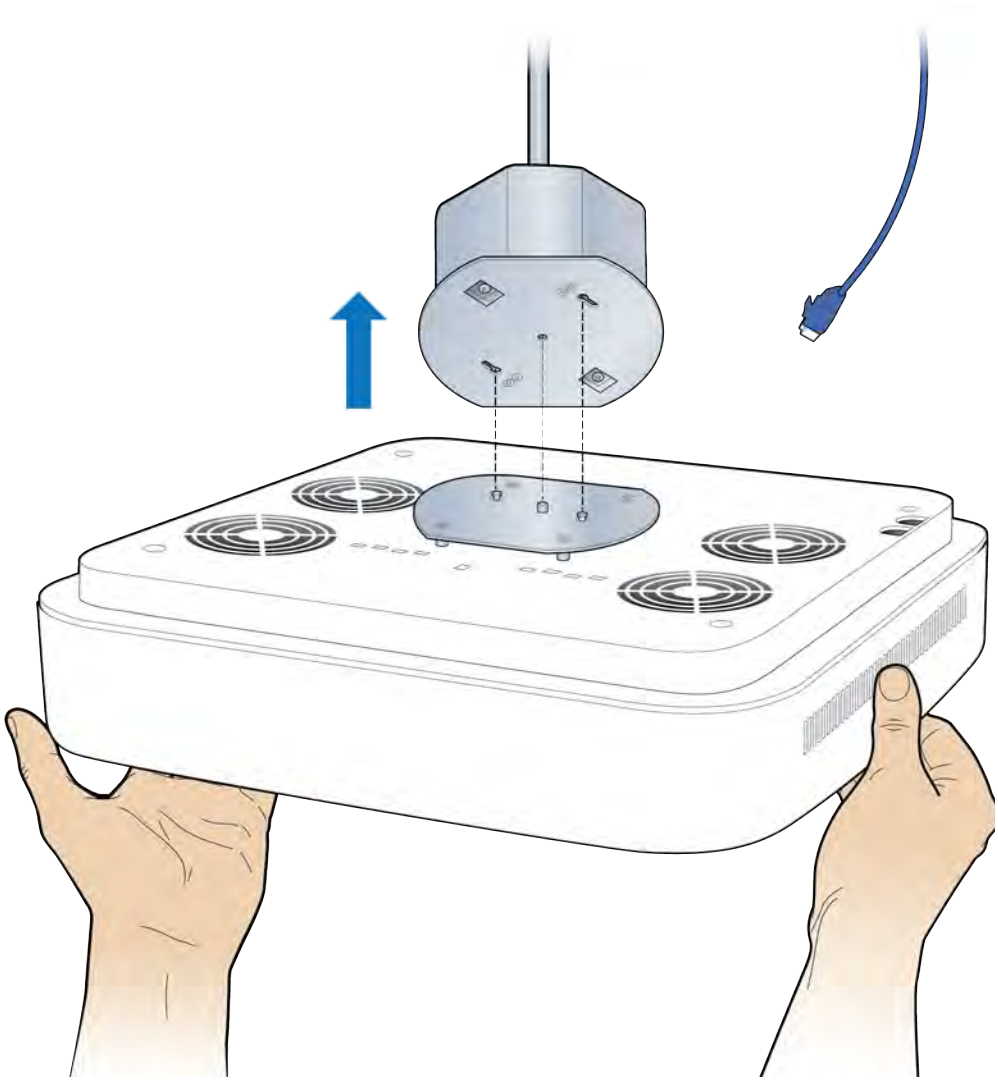

7 Twist the RP counterclockwise.

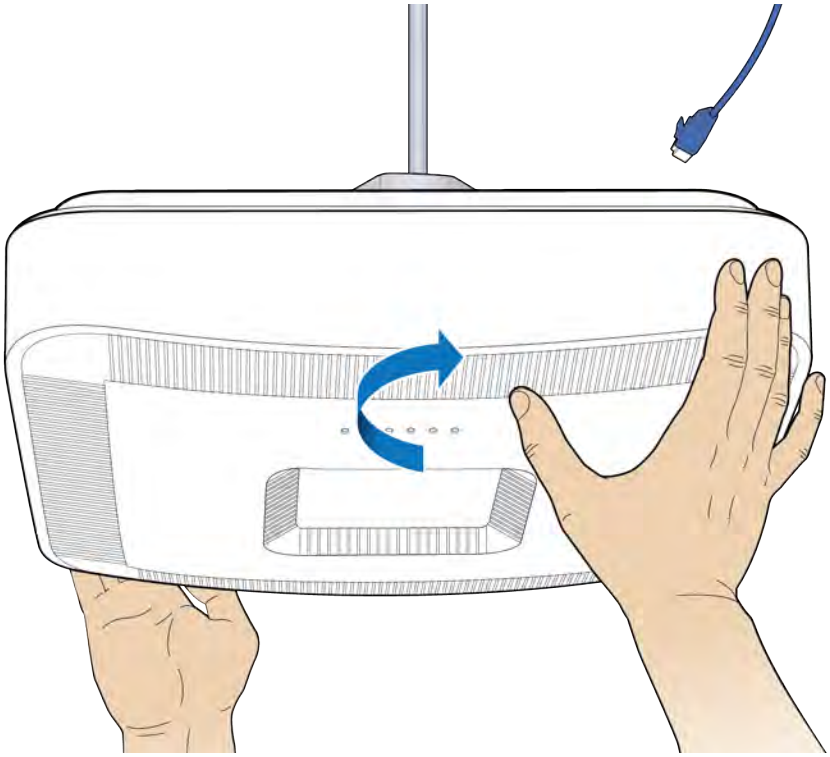

8 Remove the RP cover.

NOTE: The cover is attached to the RP with two lanyards.

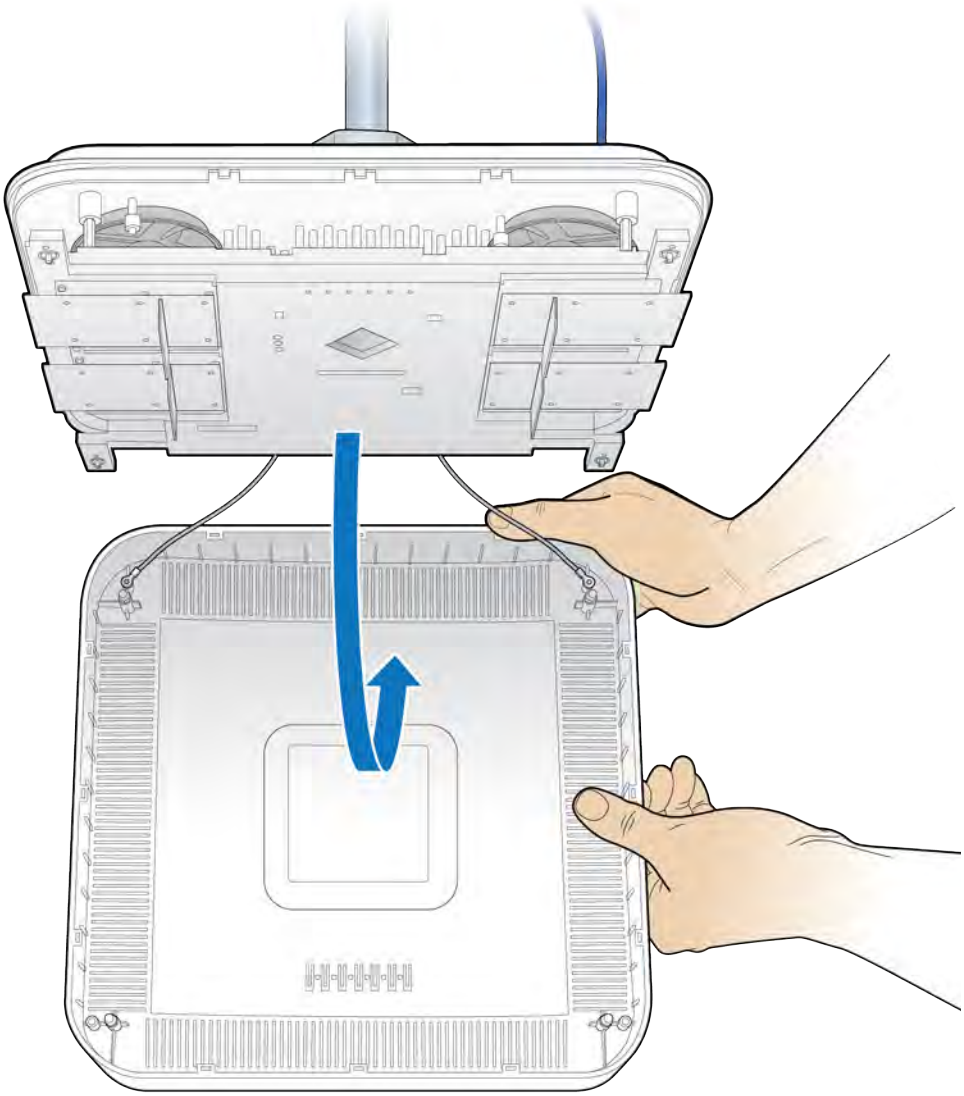

9 Connect the Ethernet cable to the MR port.

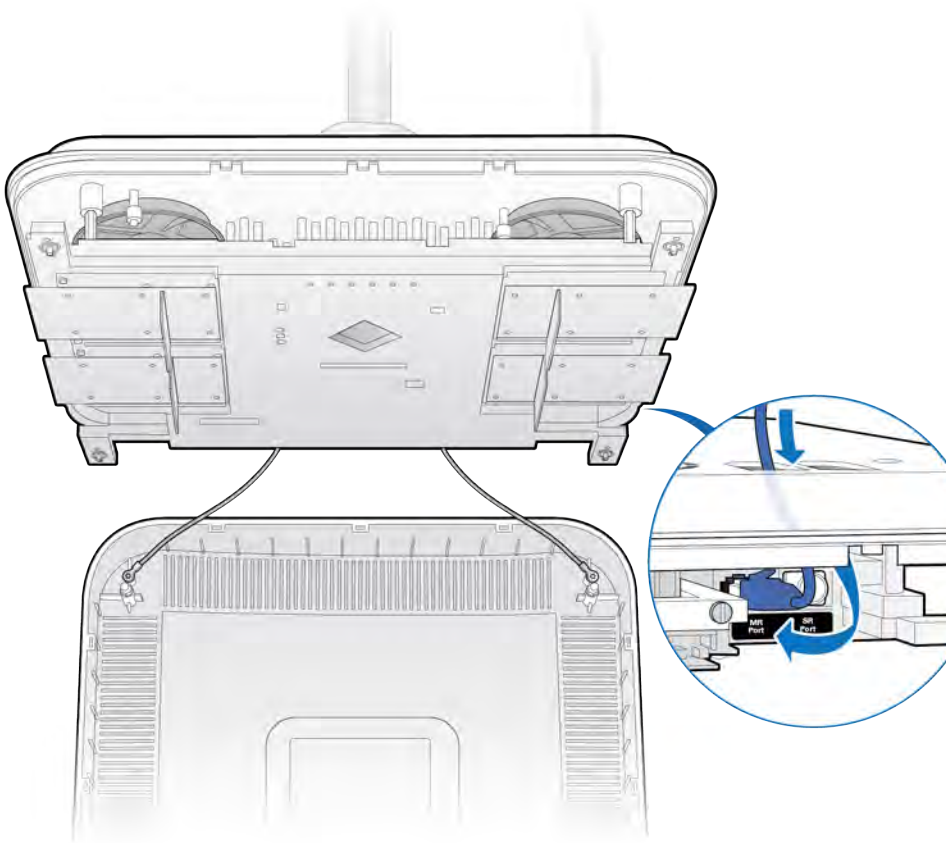

10 Replace the RP cover.

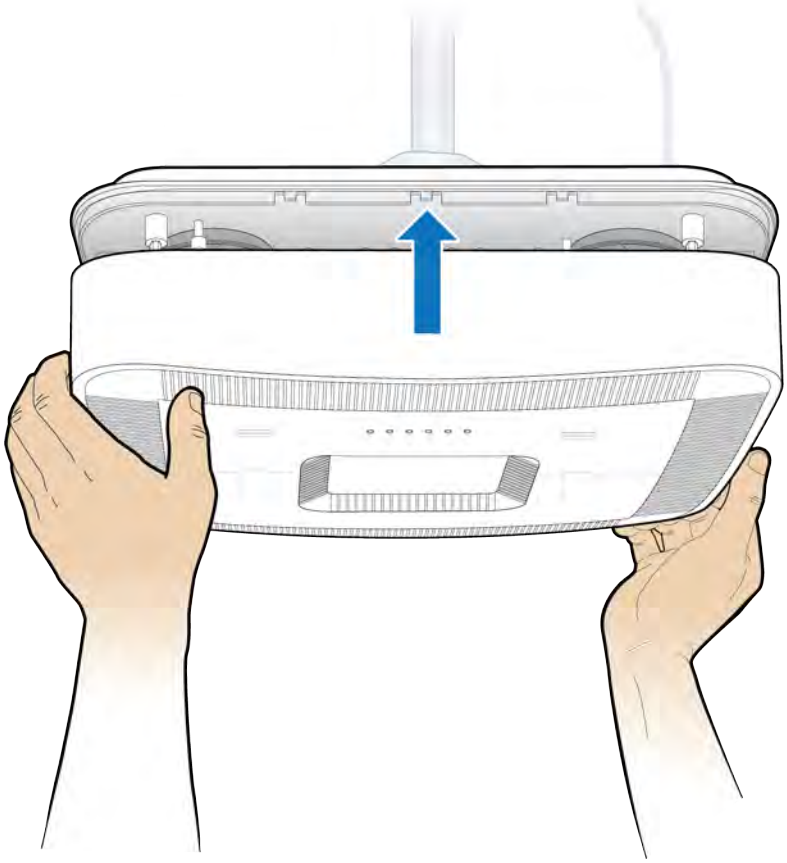

11 Verify the RP installation. See The operational state of the RP can be determined by the LED status on the RP. Additional information can be attained from the WebGUI status screens.

For verification procedures, see RP post-replacement verification.

Replacing a pole mounted RP5100i

1 Remove the RP cover.

NOTE: The cover is attached to the RP with two lanyards.

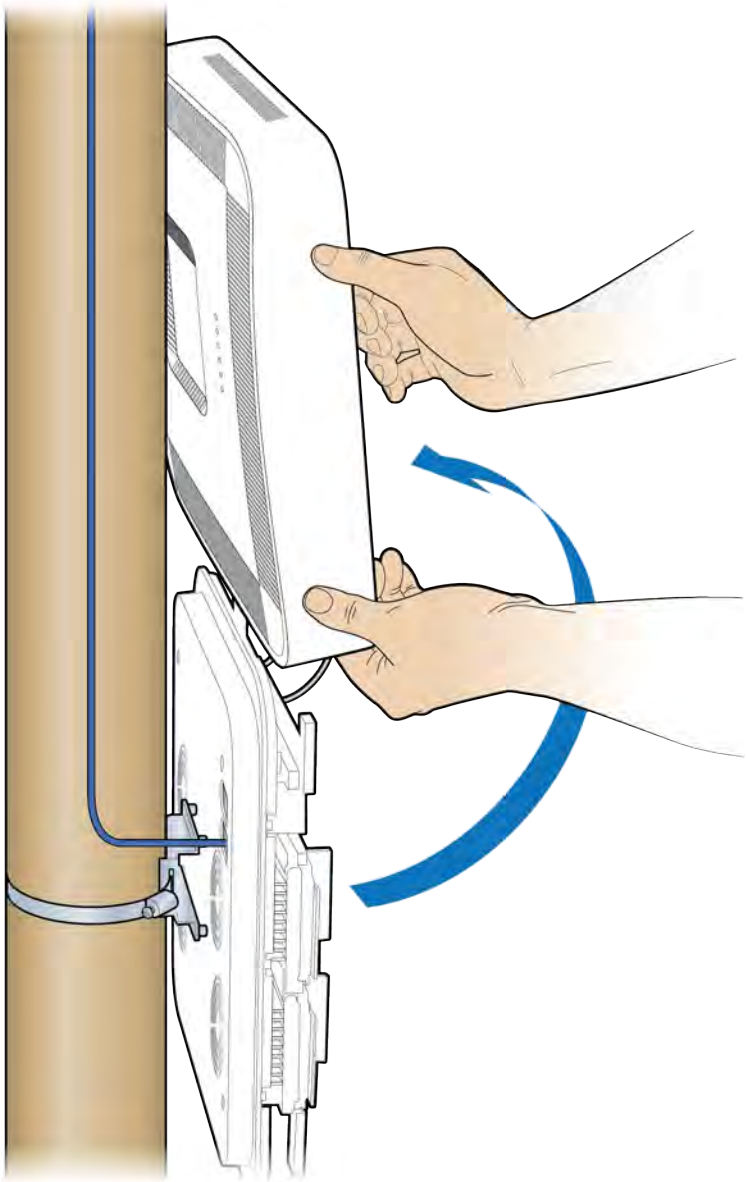

2 Disconnect the Ethernet cable.

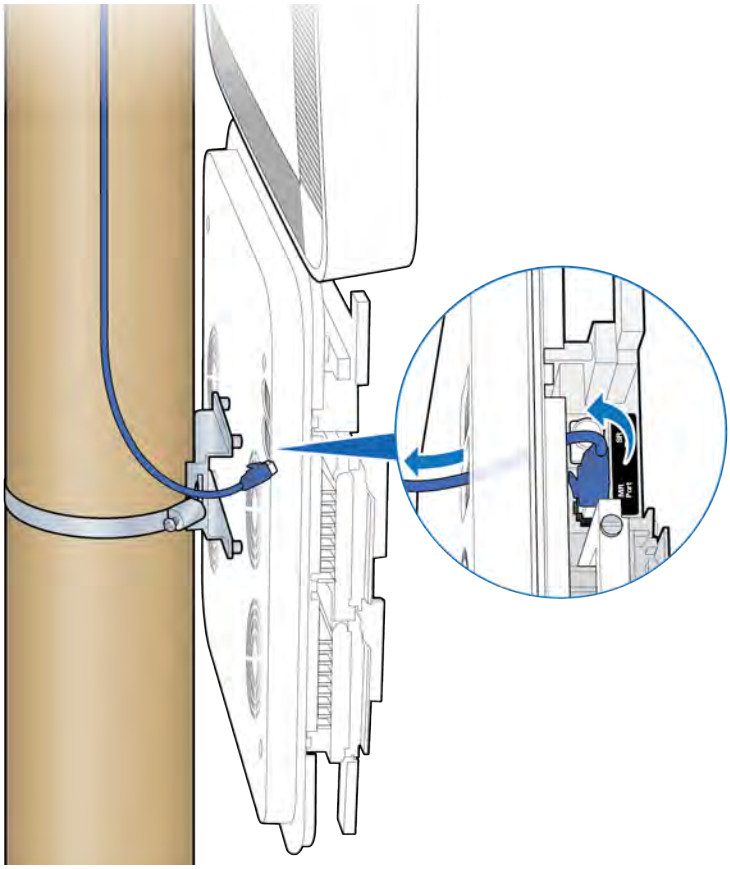

3 Loosen the clamp and remove the RP.

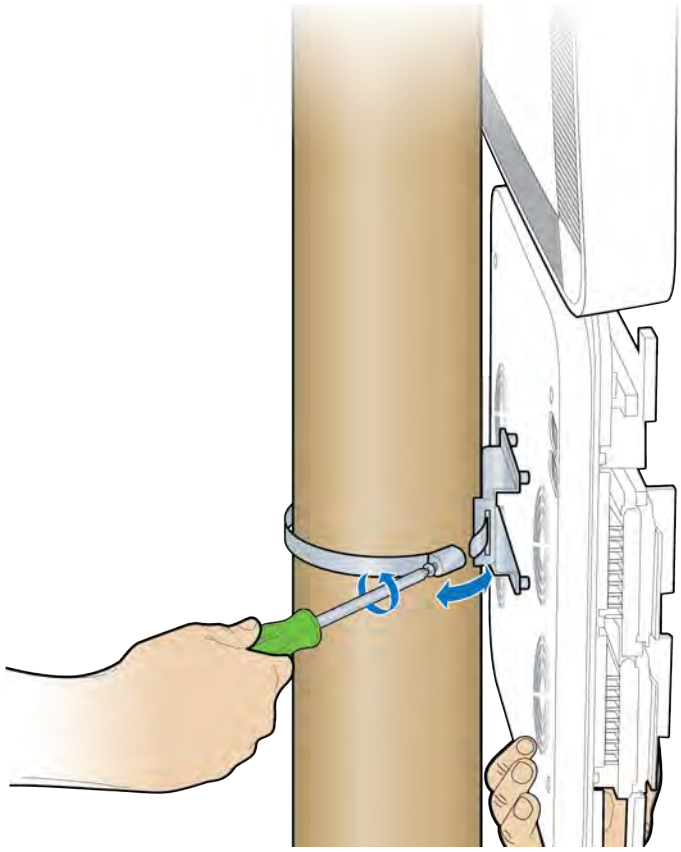

4 Attach the bracket to the replacement RP.

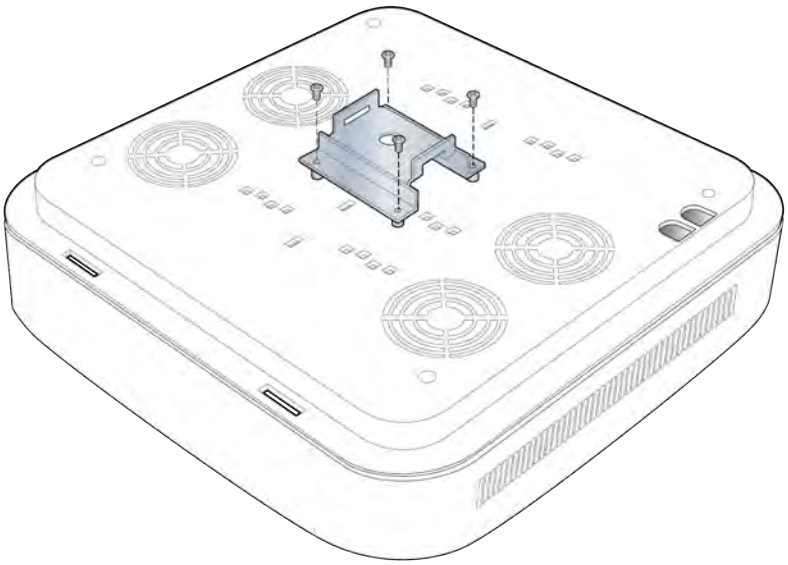

5 Attach the replacement RP to the pole using the clamp.

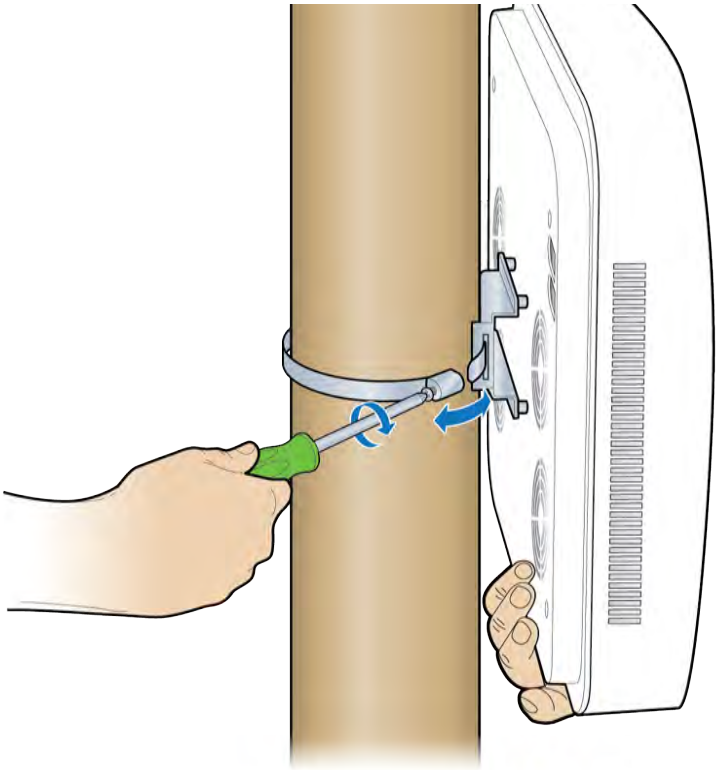

6 Remove the cover and connect the Ethernet cable to the RP.

NOTE: The cover is attached to the RP with two lanyards.

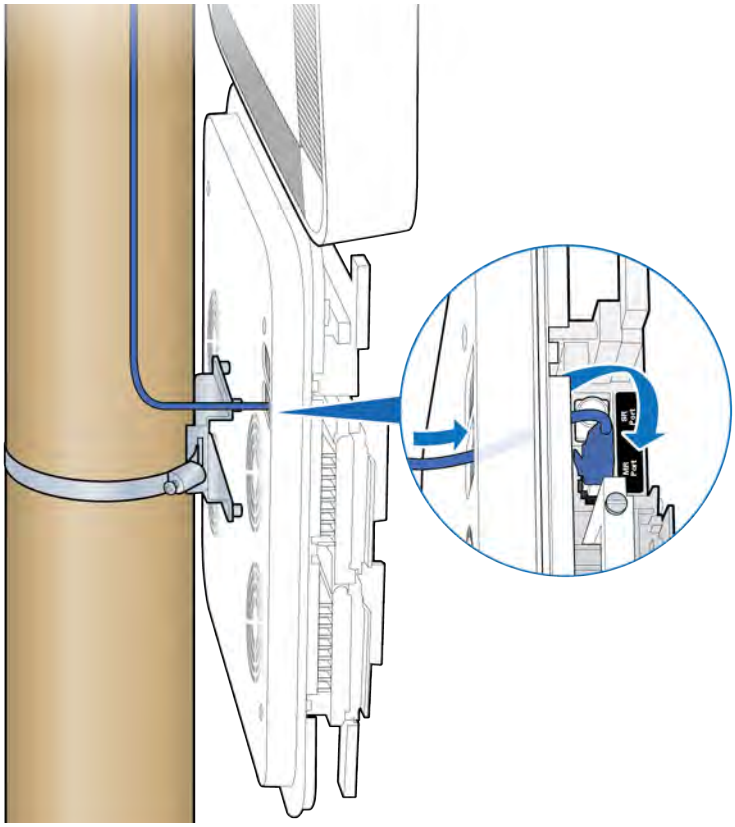

7 Replace the cover on the RP.

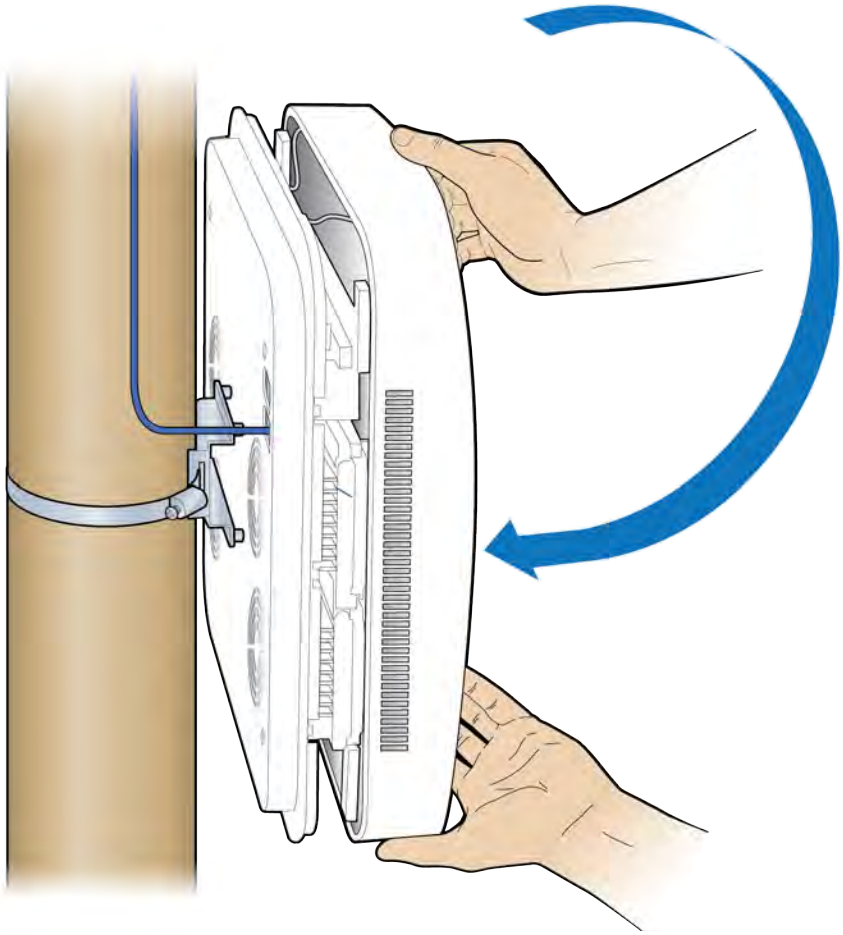

8 Verify the RP installation. The operational state of the RP can be determined by the LED status on the RP. Additional information can be attained from the WebGUI status screens.

For verification procedures, see RP post-replacement verification.

Replacing RP5100i RF modules

The following procedures provide instructions for replacing a ONECELL Radio Point RF module.

WARNING

Disconnect the Ethernet cable(s) on the RP to remove the power. Failure to do so will cause damage to the RP.

1 Remove the RP cover.

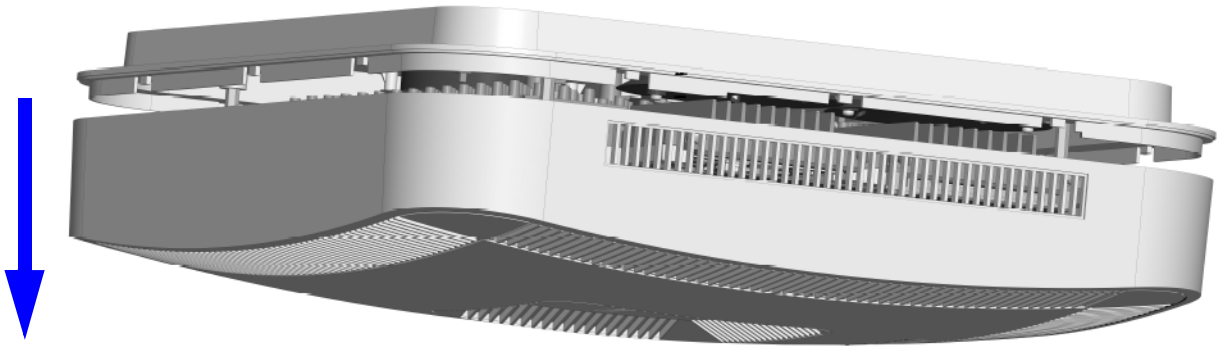

2 Disconnect the Ethernet cable on the RP.

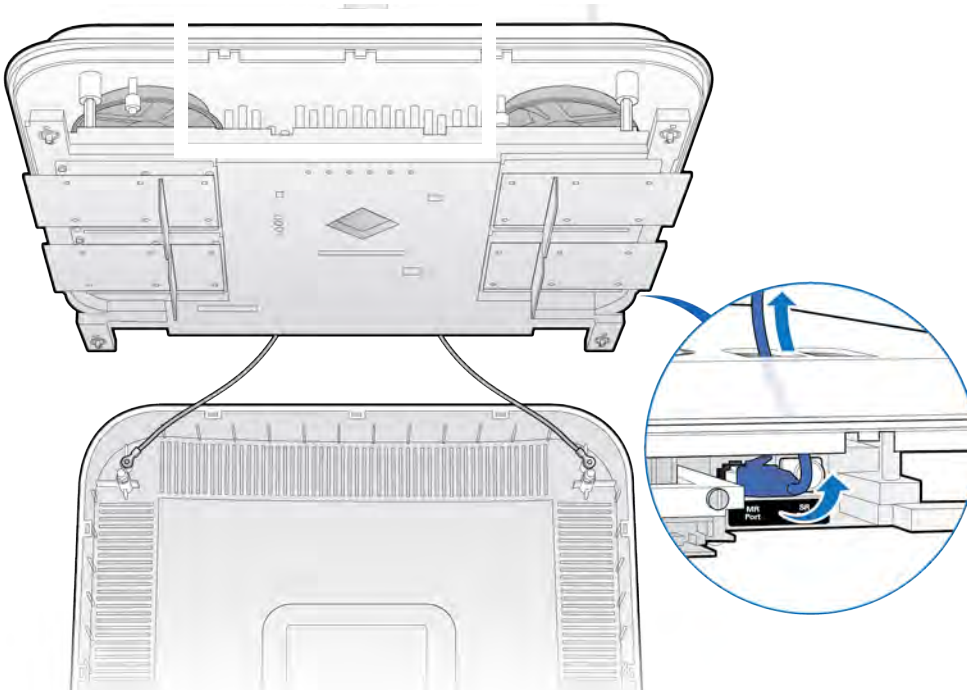

3 Unscrew the RF module.

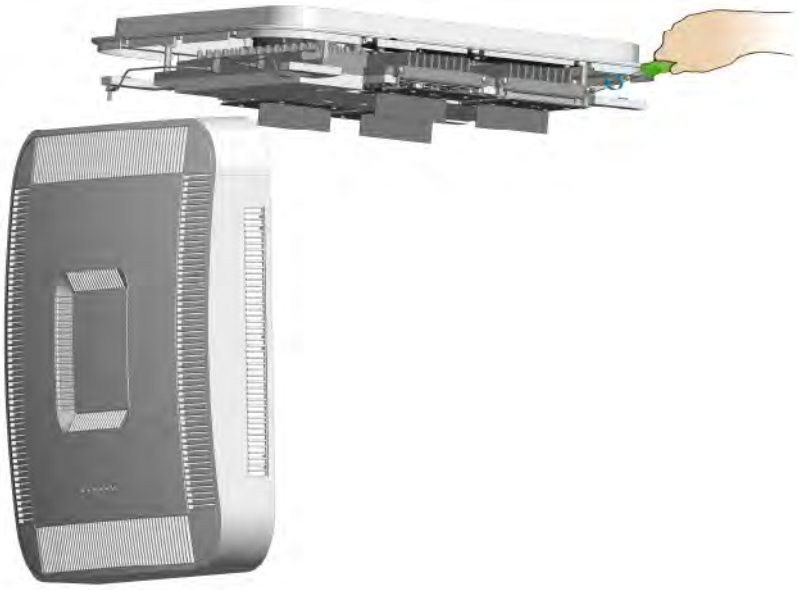

4 Remove the RF module.

5 Install the replacement RF module.

6 Secure it in the slot.

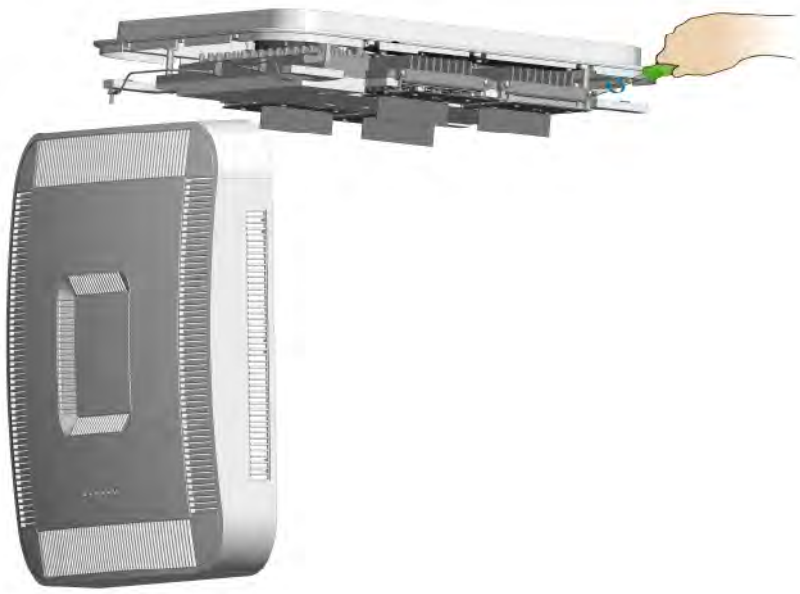

7 Connect the Ethernet cable.

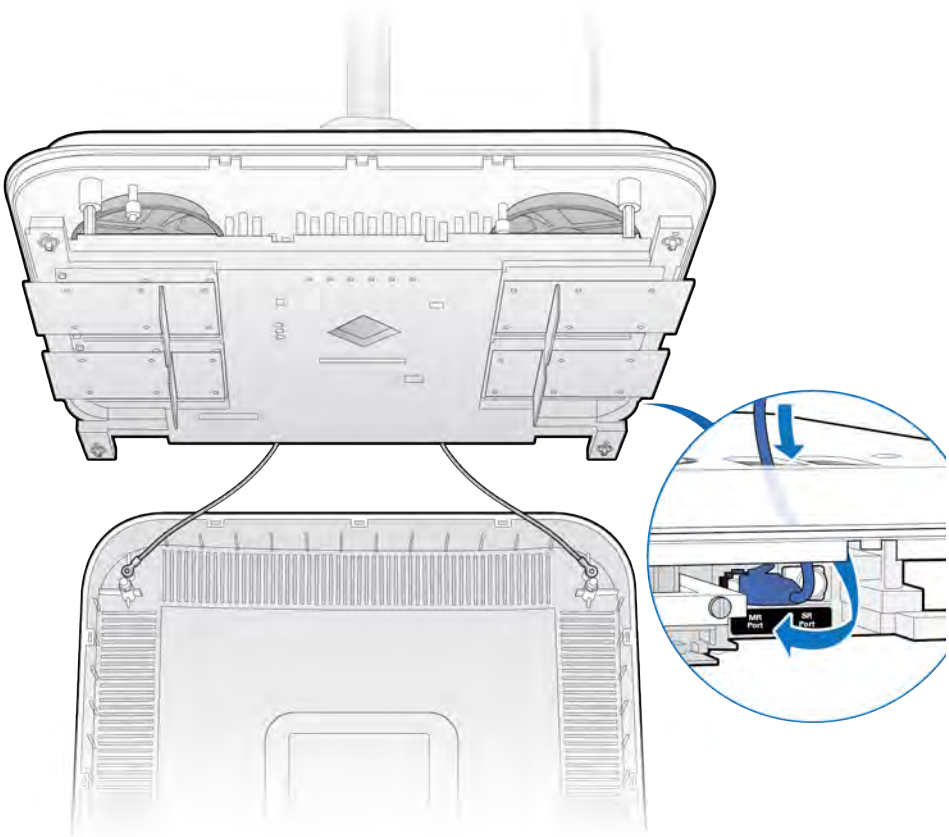
MR Port
SR Port

8 Attach the RP cover.

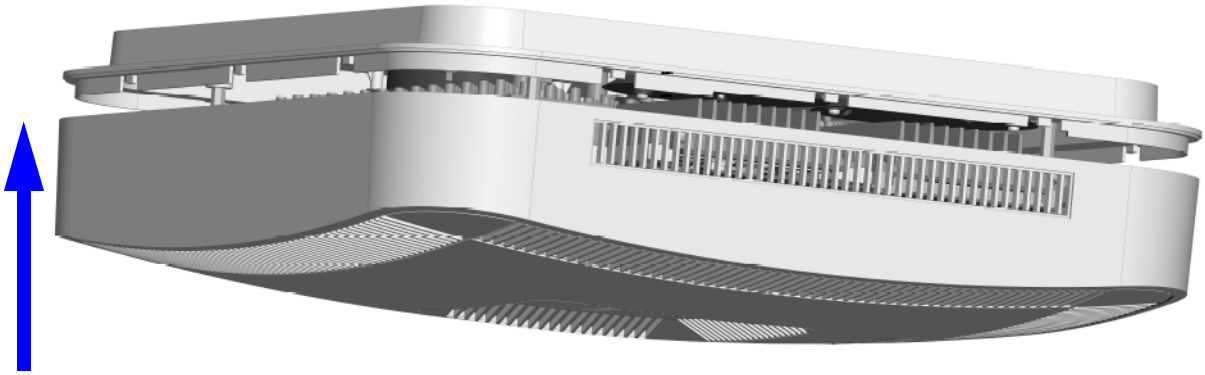

9 Verify the RF module installation. The operational state of the RF module can be determined by the LED status on the RP. Additional information can be attained from the WebGUI status screens.

For verification procedures, see RP post-replacement verification.

Replacing RP2000 series Radio Points

This procedure provides instructions for replacing a ONECELL RP2000 series Radio Point in a live network environment.

Replacing a ceiling Indoor RP (above tile)

1 Remove the ceiling tile below the mounted RP to allow access to the mounting hardware and Ethernet cable.

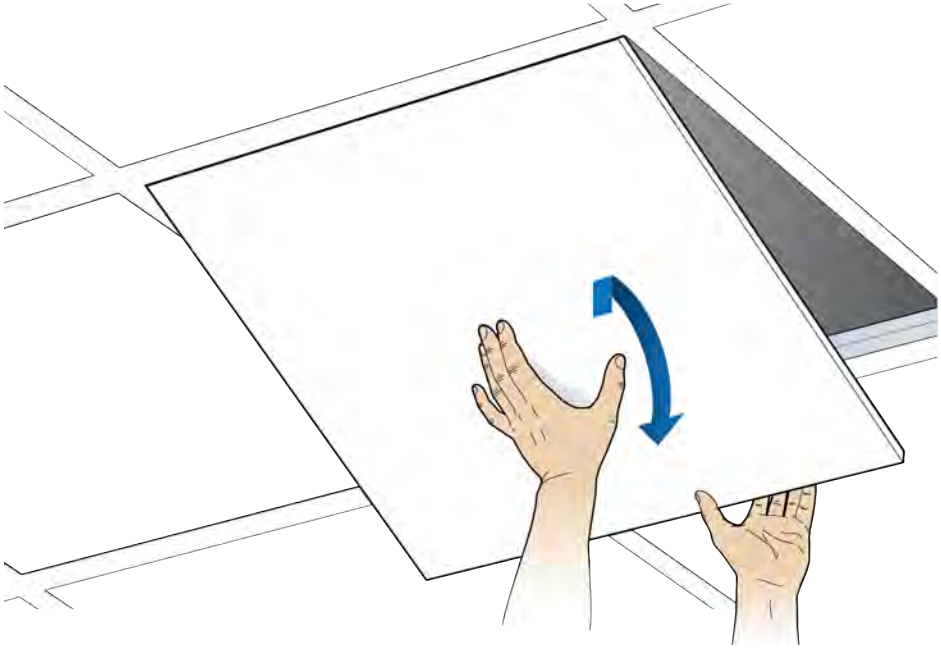

2 Loosen the locking screw.

NOTE: The locking screw is not on newer RP2000s.

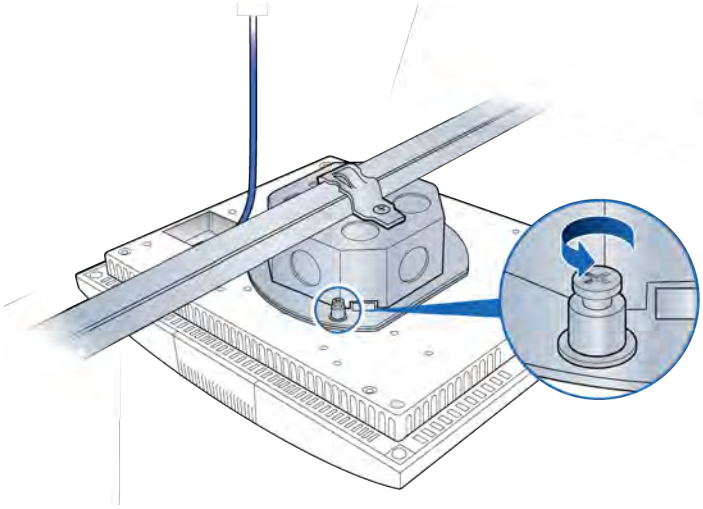

3 Disconnect the Ethernet cable.

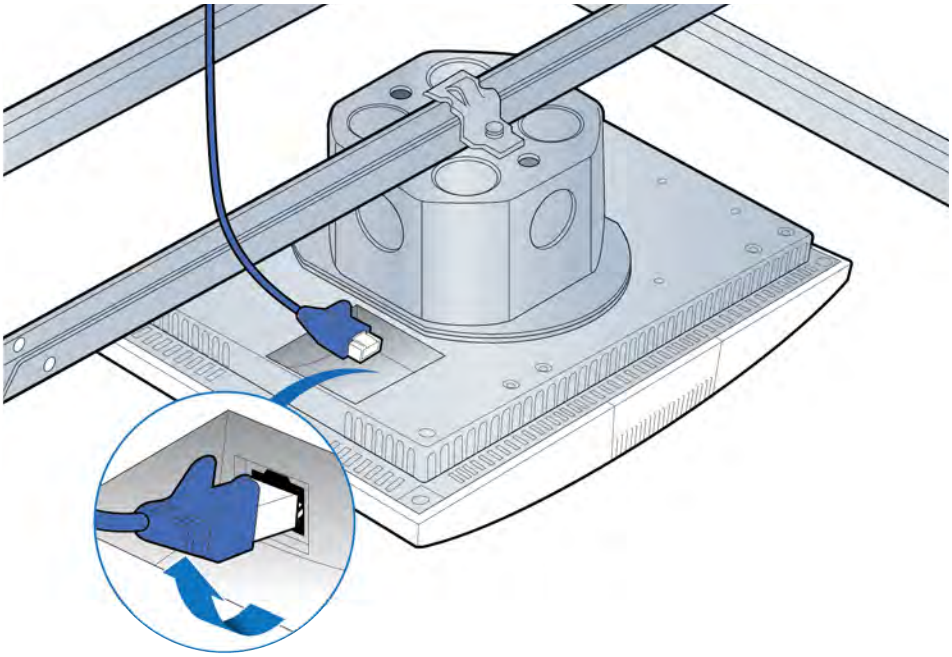

4 Twist the RP to remove it.

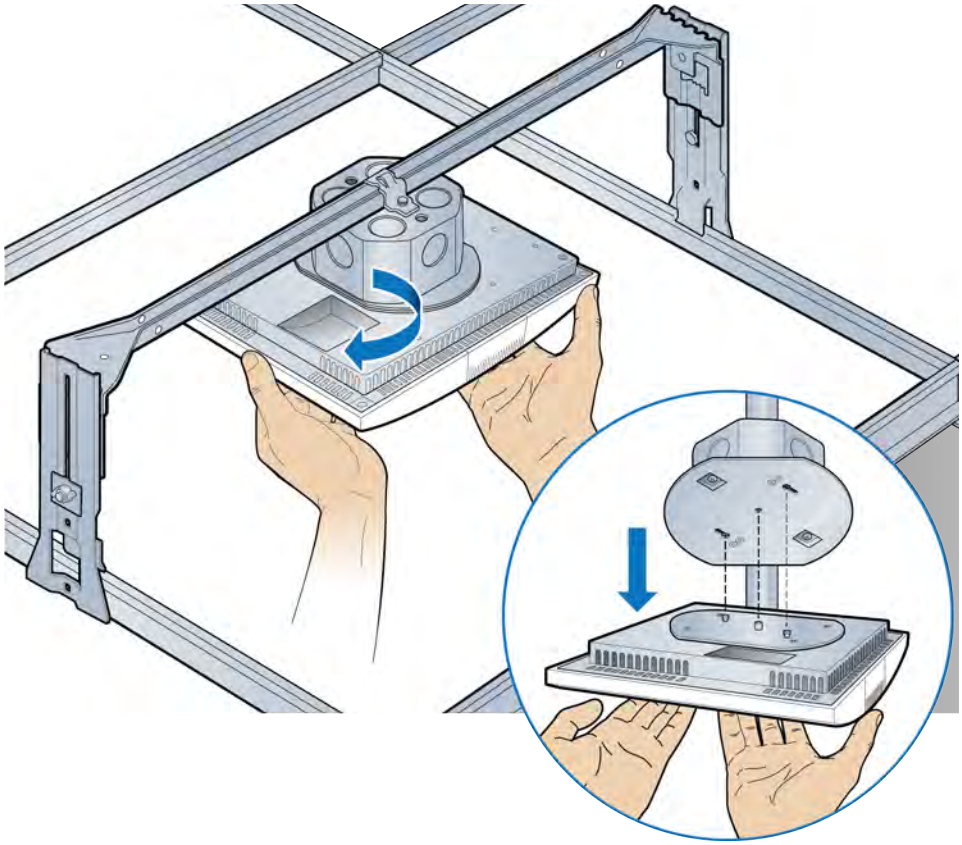

5 Remove the mounting plate from the failed RP and attach it to the replacement RP.

Set the failed RP aside.

NOTE: Apply thread locking compound to the screws prior to installation.

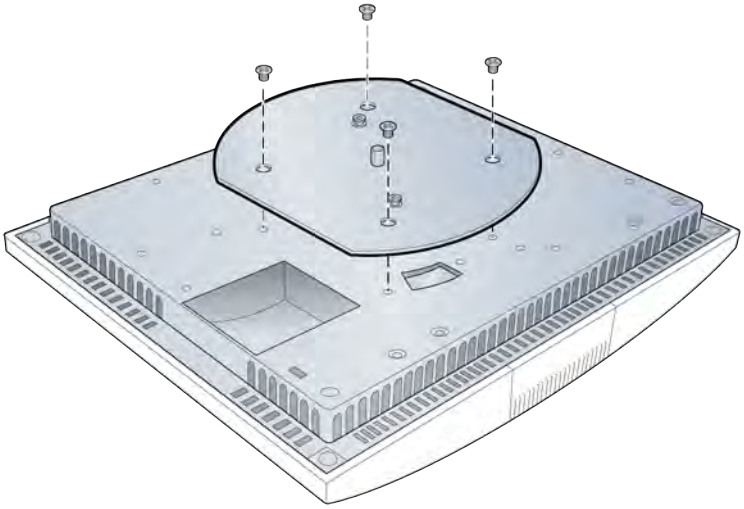

6 Attach the RP to the octagonal mounting plate and twist to engage.

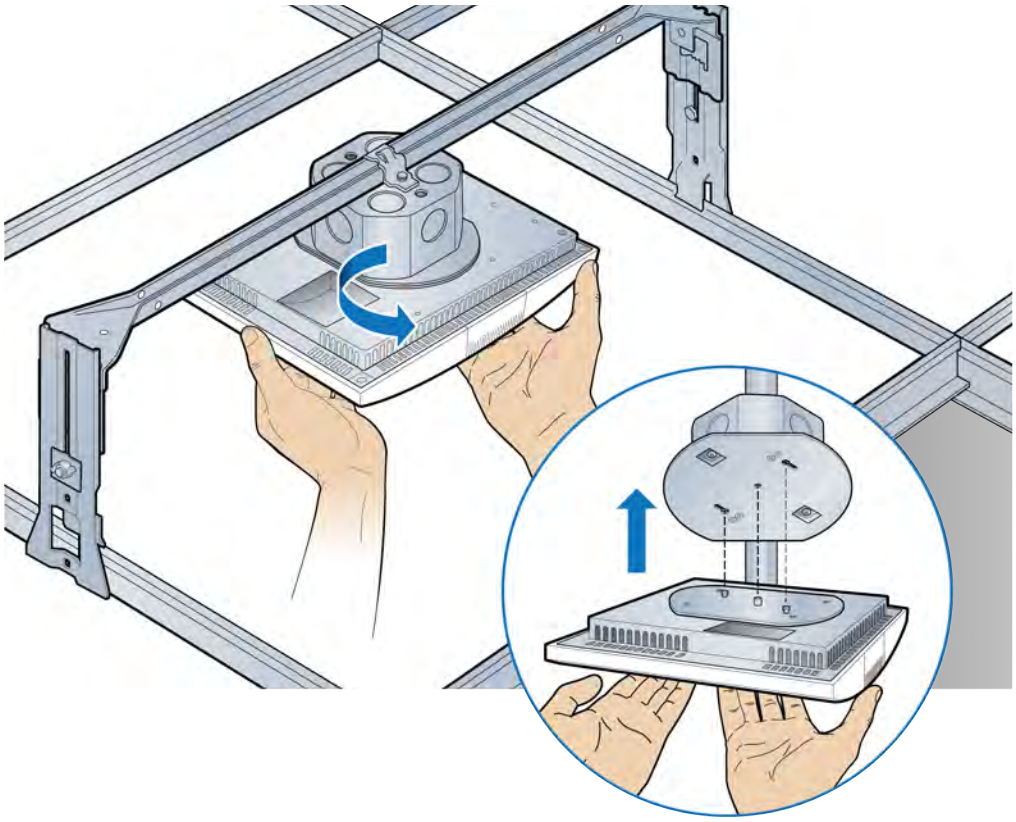

7 Connect the Ethernet cable to the RP.

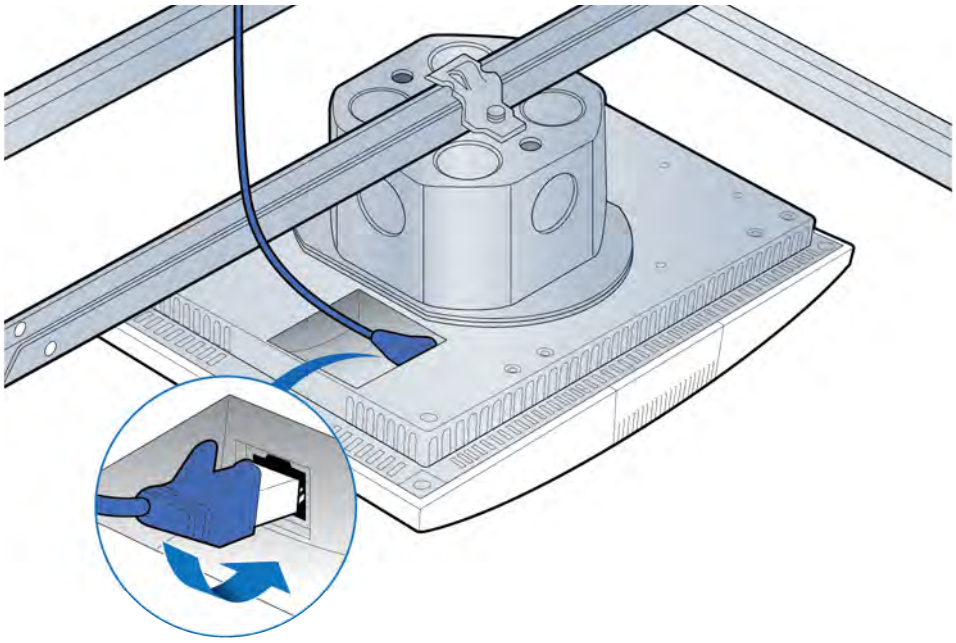

8 Replace the ceiling tile.

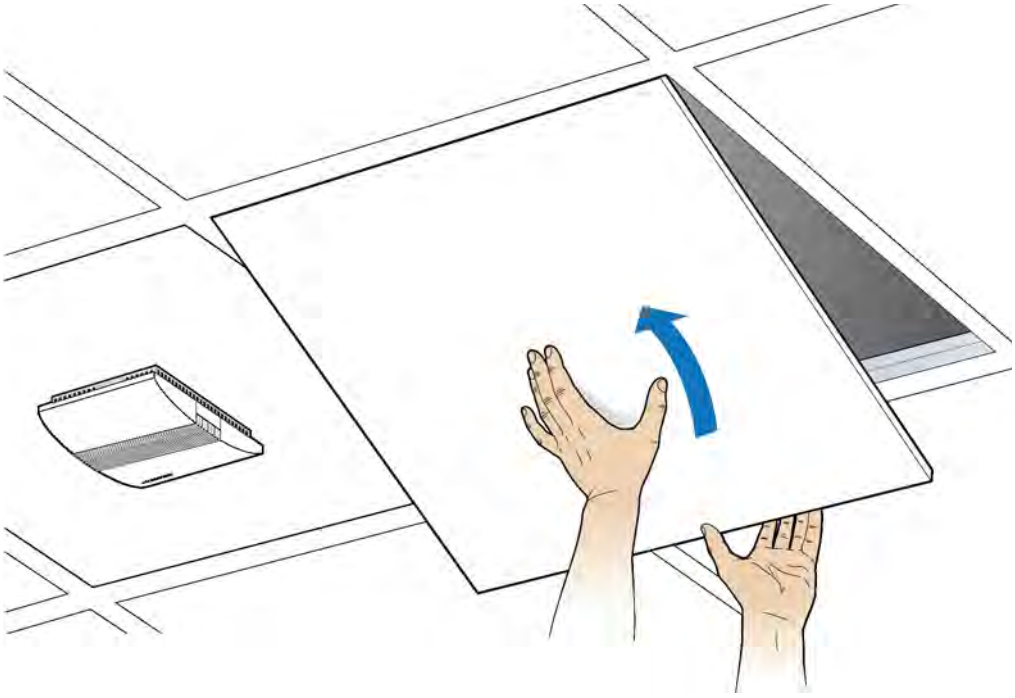

9 Verify the RP installation. See The operational state of the RP can be determined by the LED status on the RP. Additional information can be attained from the WebGUI status screens.

For verification procedures, see RP post-replacement verification.

Replacing a ceiling Indoor RP (on tile)

1 Disconnect the Ethernet cable from the RP.

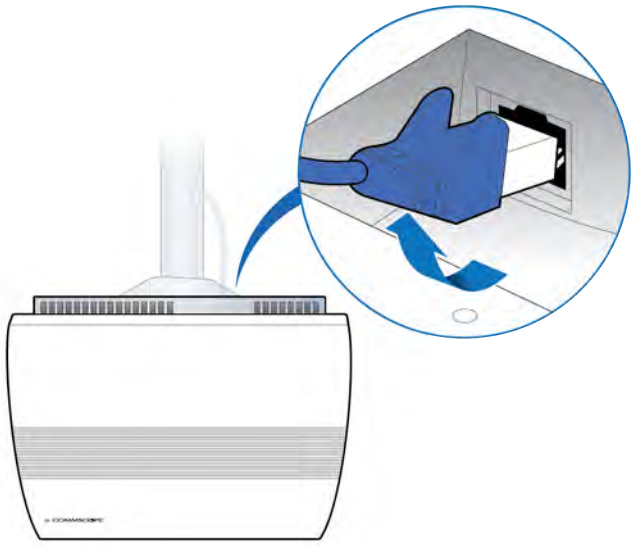

2 If there is a locking screw, loosen it.

3 Twist the RP.

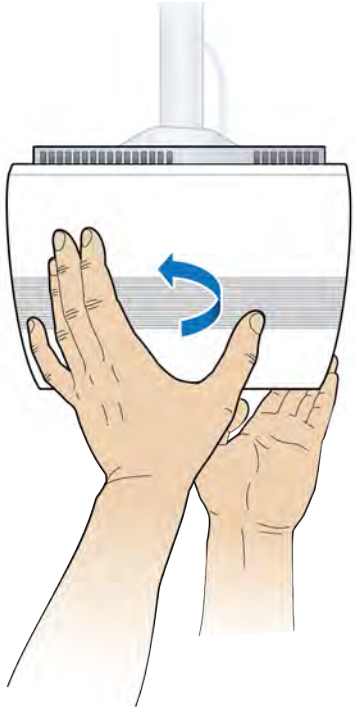

4 Remove the RP. Remove the mounting plate from the RP and set the RP aside.

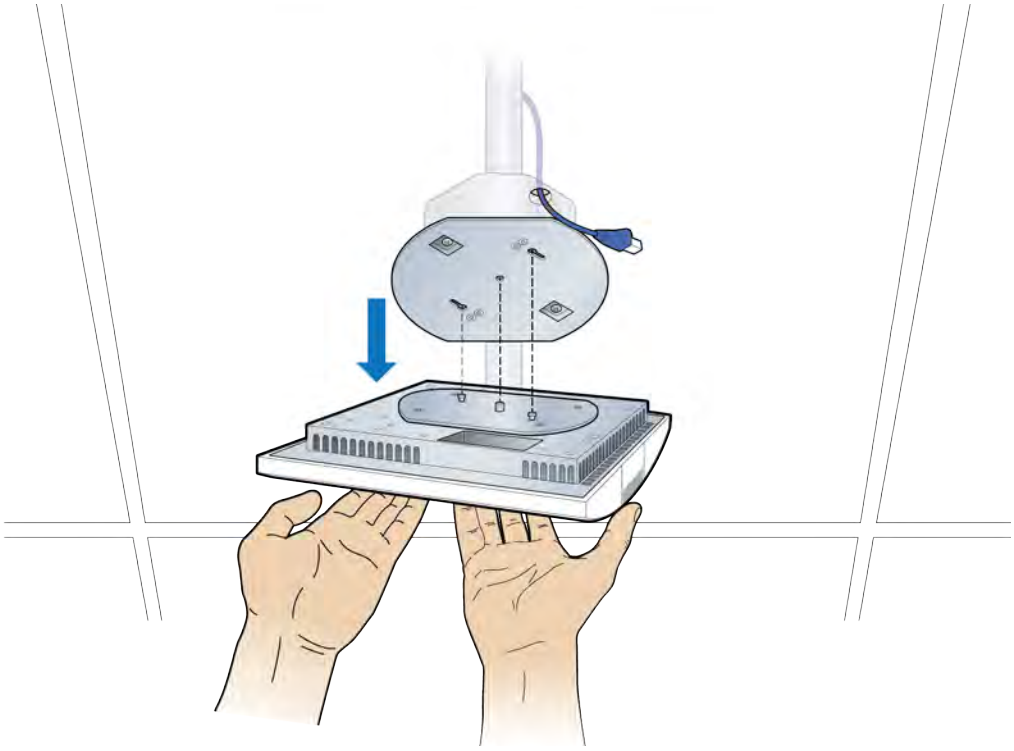

5 Attach the plate to the replacement RP.

NOTE: Apply thread locking compound to the screws prior to installation.

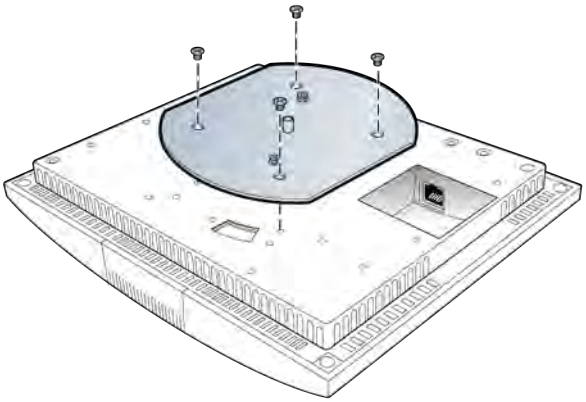

6 Attach the RP to the octagonal mounting plate.

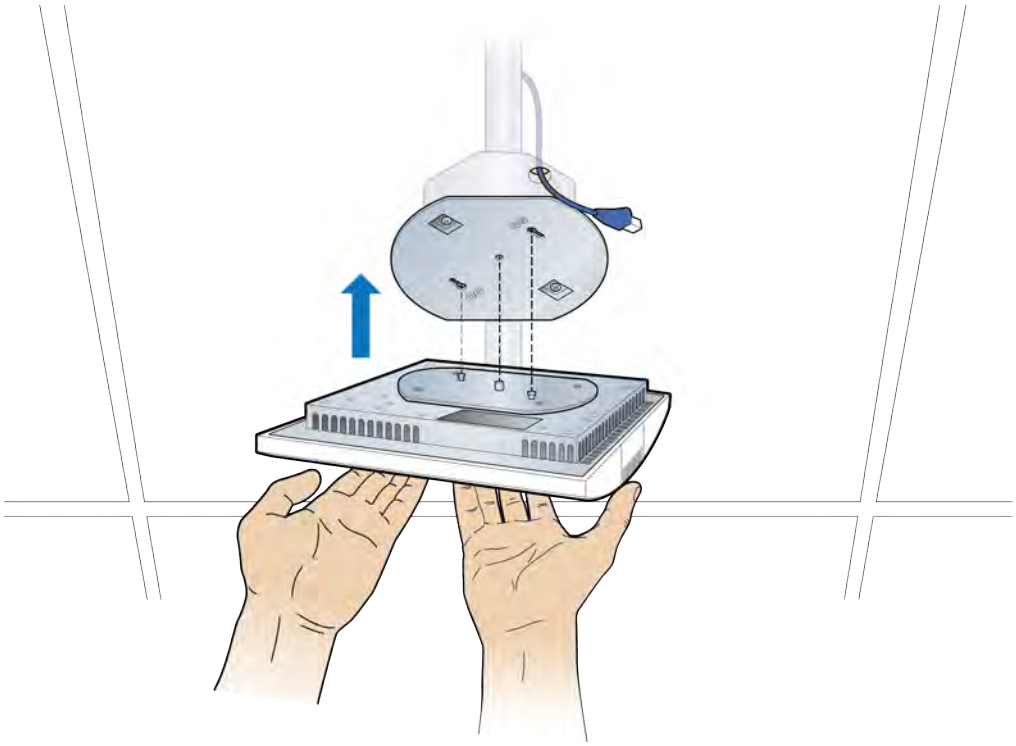

7 Secure RP to octagon plate.

8 Connect the Ethernet cable to the RP.

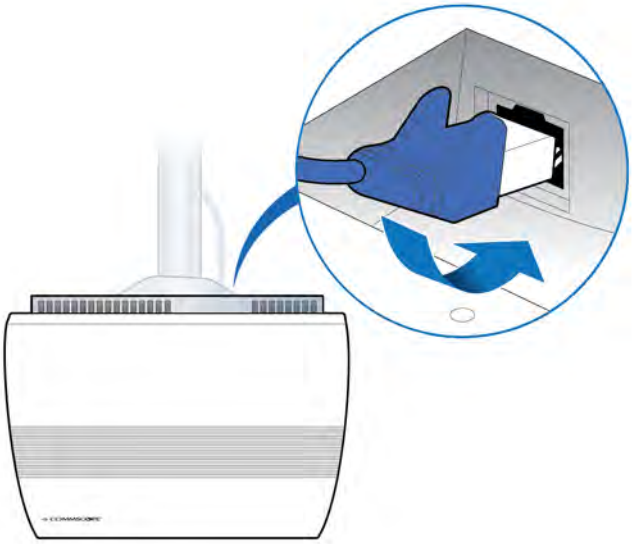

9 Verify the RP installation. See The operational state of the RP can be determined by the LED status on the RP. Additional information can be attained from the WebGUI status screens.

For verification procedures, see RP post-replacement verification.

Replacing a flown mounted Indoor RP

1 Disconnect the Ethernet cable.

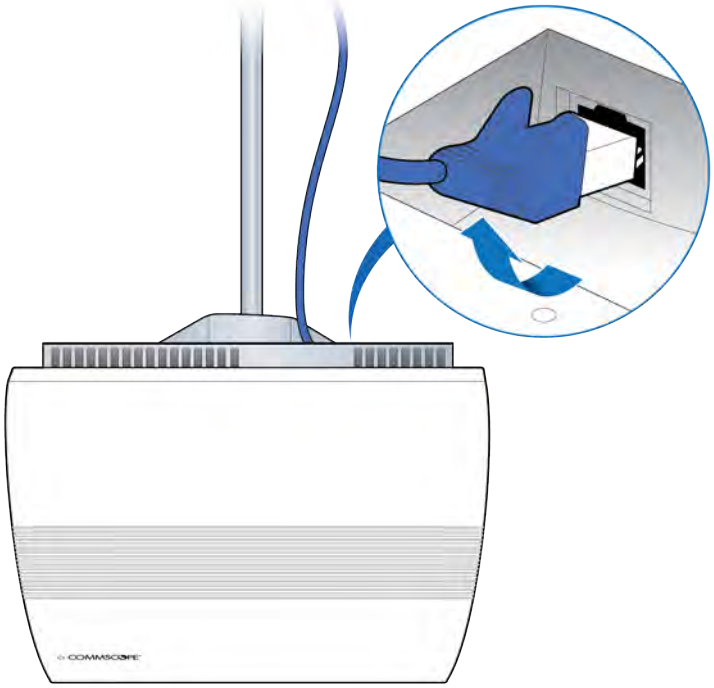

2 Remove the RP.

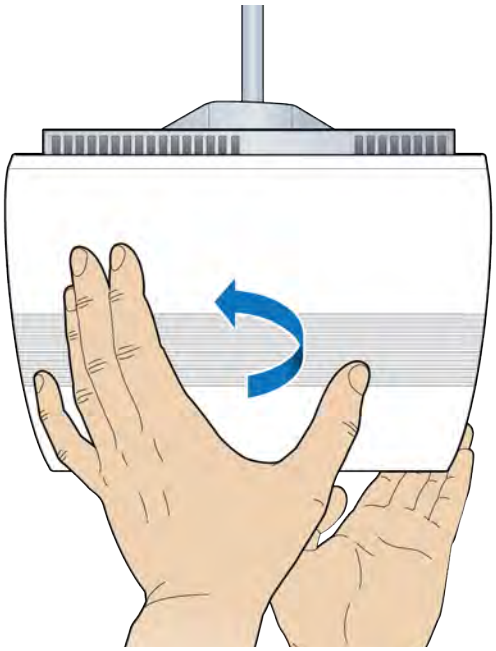

3 Remove the mounting plate from the RP and set the failed RP aside.

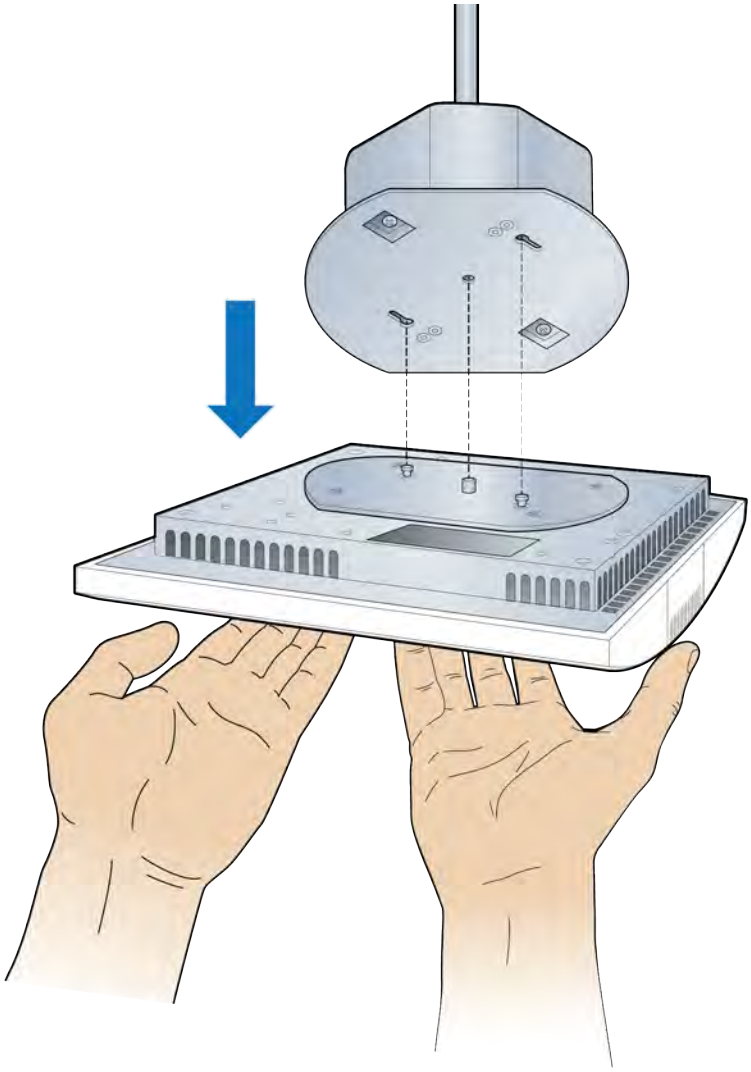

4 Attach the mounting plate to the replacement RP.

NOTE: Apply thread locking compound to the screws prior to installation.

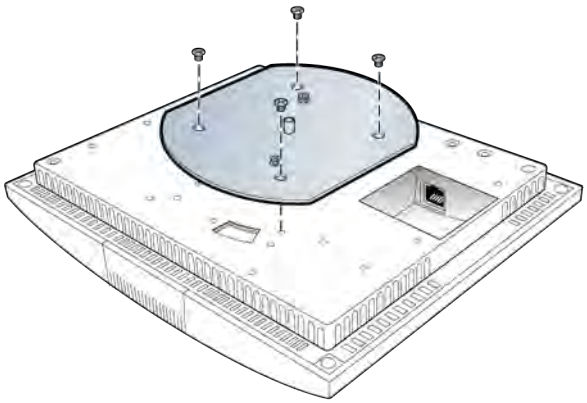

5 Attach the RP to the octagon plate.

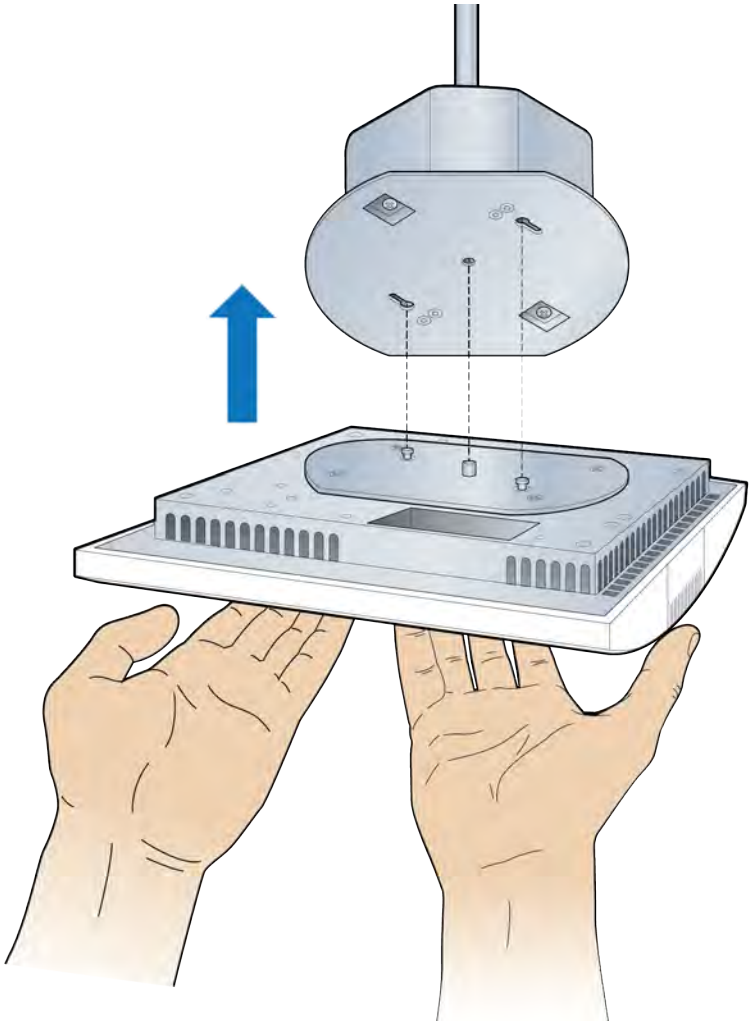

6 Secure the RP.

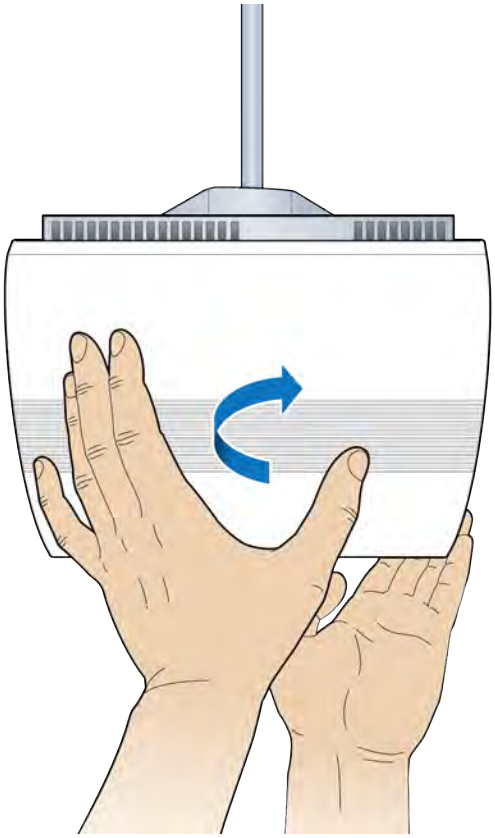

7 Connect the Ethernet cable to the RP.

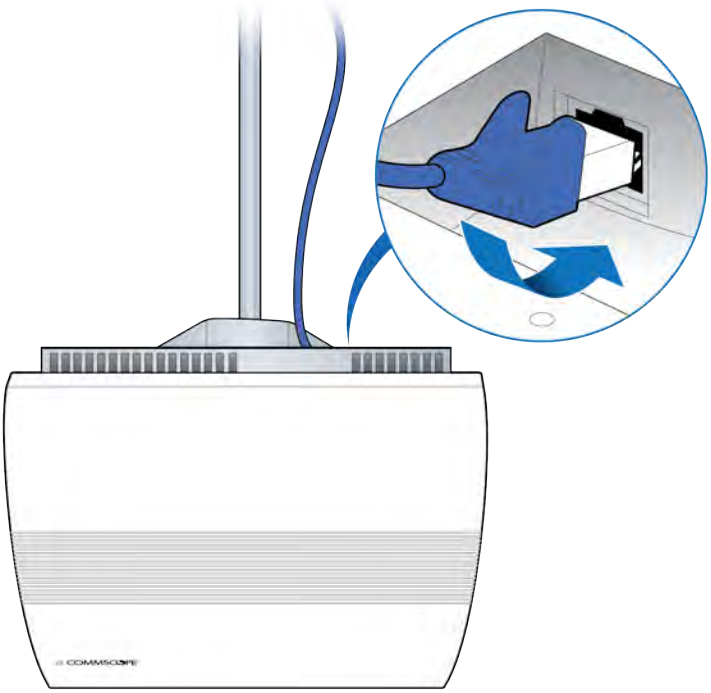

8 Verify the RP installation. See The operational state of the RP can be determined by the LED status on the RP. Additional information can be attained from the WebGUI status screens.

For verification procedures, see RP post-replacement verification.

Replacing a pole mounted Indoor RP

1 Disconnect the Ethernet cable.

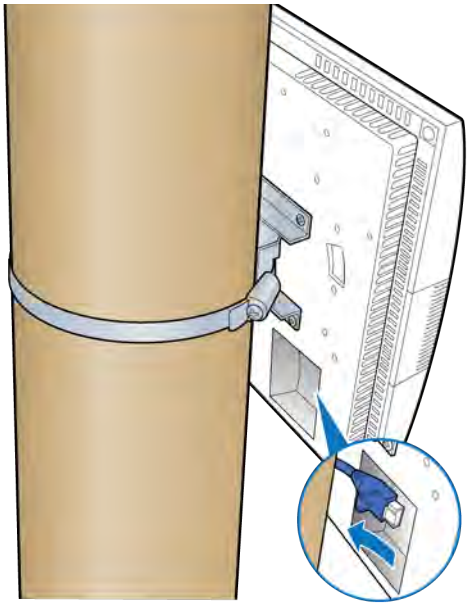

2 Loosen the clamp, remove the RP and set it aside.

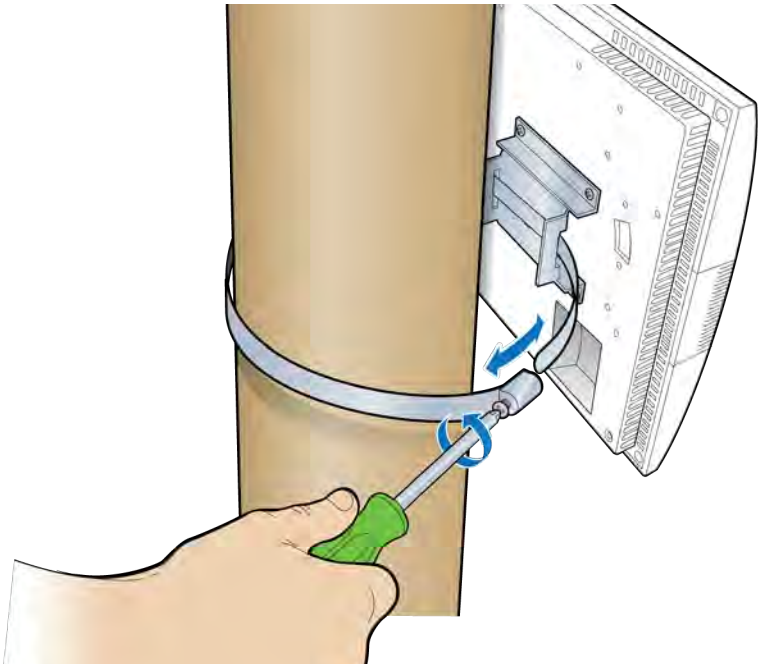

3 Remove the bracket from the failed RP and attach it to the replacement RP.

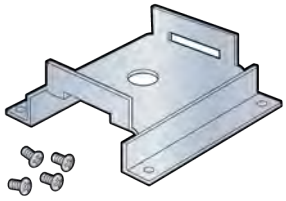

Bracket

4 Attach the replacement RP to the pole using the clamp.

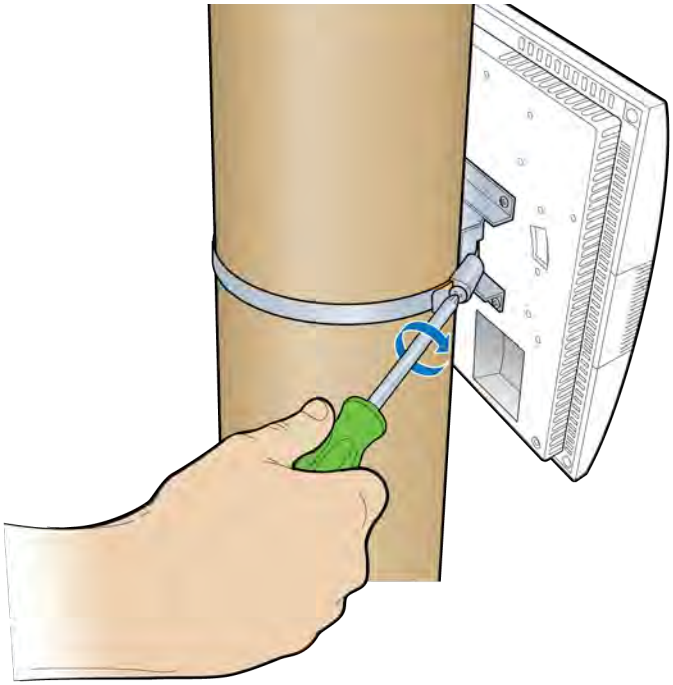

5 Connect the Ethernet cable to the RP.

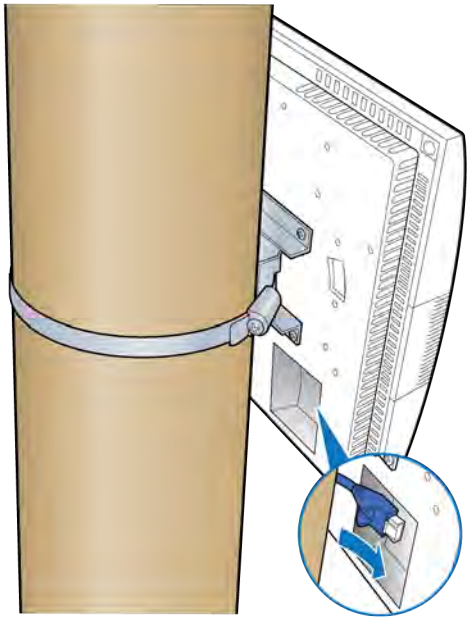

6 Verify the RP installation. See The operational state of the RP can be determined by the LED status on the RP. Additional information can be attained from the WebGUI status screens.

For verification procedures, see RP post-replacement verification.

Replacing a vertical pole mounted Rugged RP

1 Disconnect the Ethernet cable and the antenna couplers from the RP.

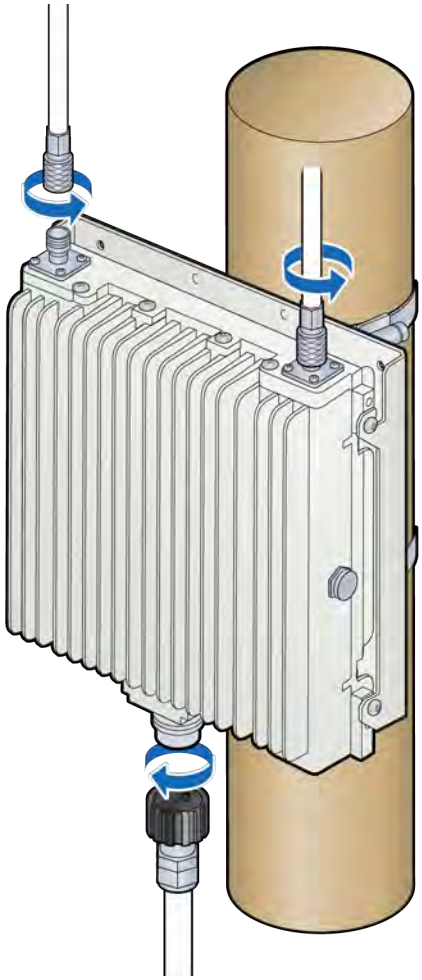

2 Remove the screws on the bottom of the RP and loosen the top screws.

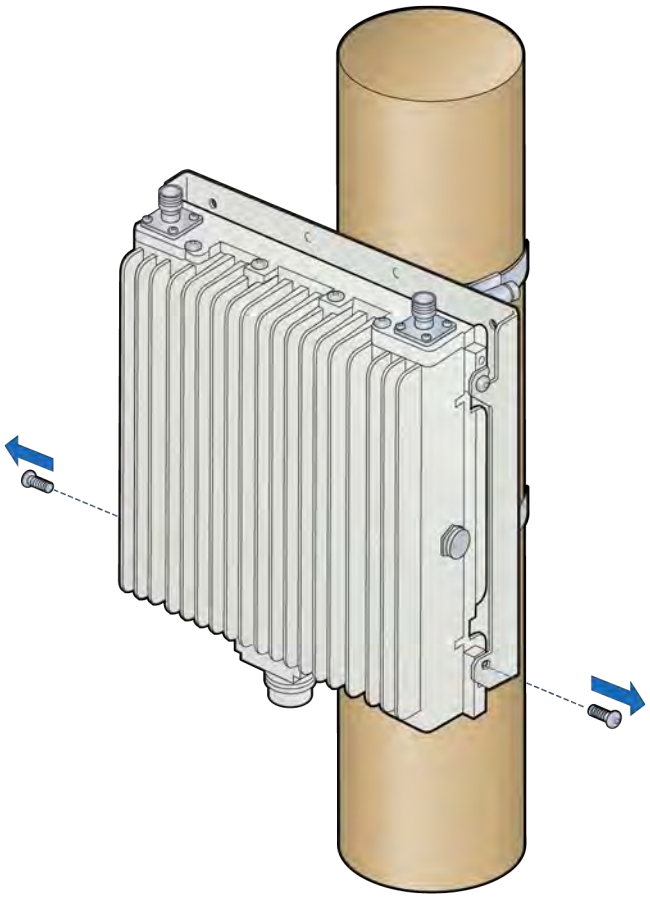

3 Lift the RP off of the mounting plate and set it aside.

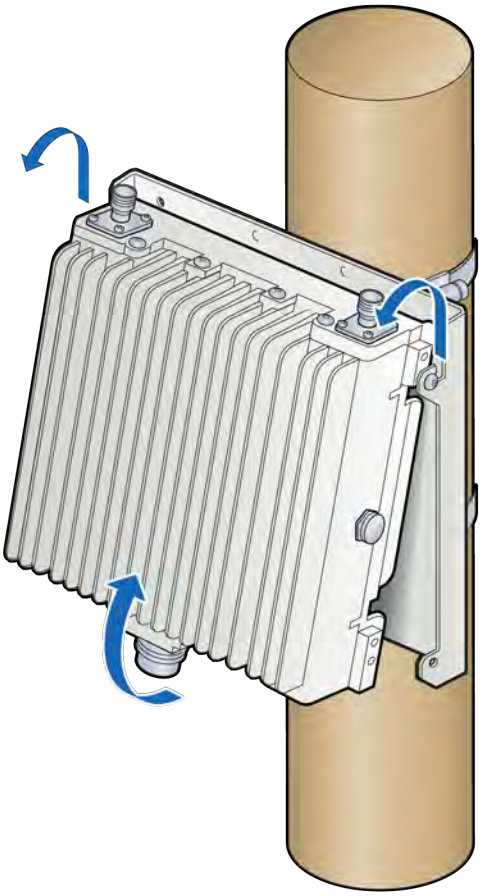

4 Insert two screws into the upper holes on the replacement RP.

NOTE: Do not tighten the screws.

CAUTION

Ensure that the RP is oriented correctly with the two antenna connectors at the top of the RP.

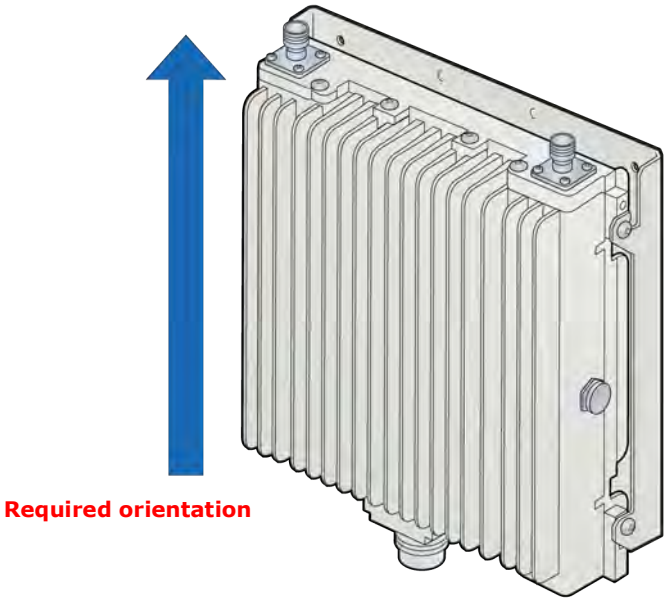

5 Hang the RP to the mounting bracket using the installed screws. Align holes at bottom location of bracket and install two additional screws.

6 Insert two screws on the bottom of the RP and tighten all four screws.

NOTE: The torque requirement for the mounting screws is 20-21 in-lbs.

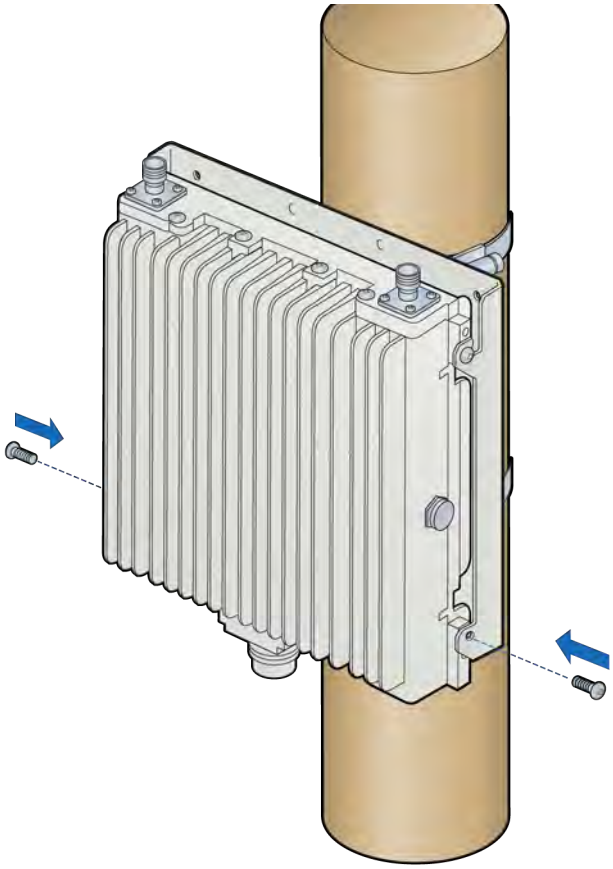

7 Connect the antenna couplers on the top of the RP.

NOTE: Check the antenna coupler manufacturer's documentation for torque requirements.

8 Connect the Ethernet cable RJ45 end to the bottom of the RP.

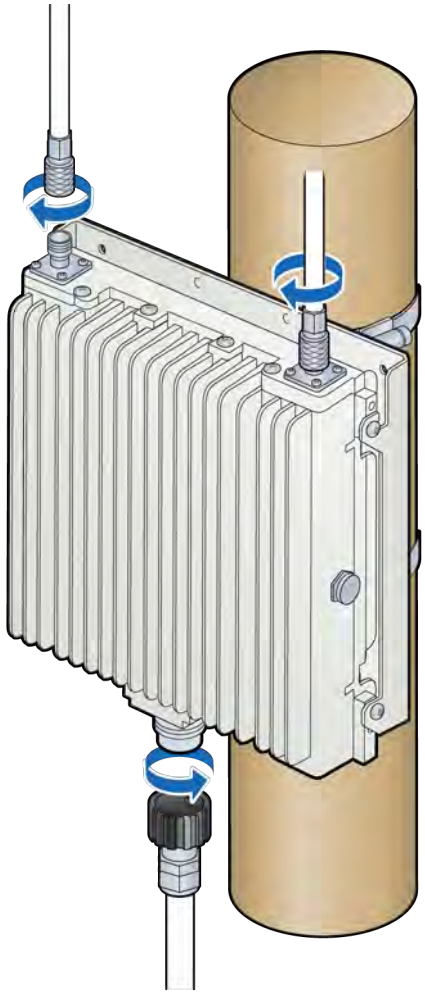

9 Verify the RP installation. See The operational state of the RP can be determined by the LED status on the RP. Additional information can be attained from the WebGUI status screens.

For verification procedures, see RP post-replacement verification.

Replacing a horizontal pole mounted Rugged RP

1 Disconnect the Ethernet cable and the antenna couplers from the RP.

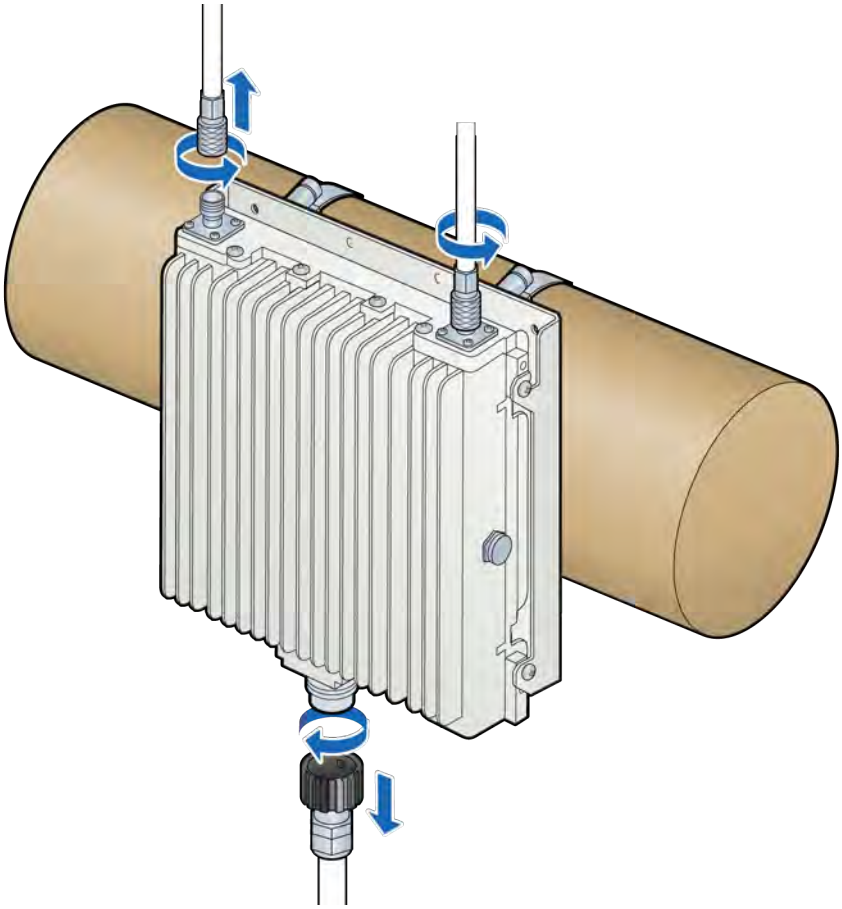

2 Remove the screws on the bottom of the RP and loosen the top screws.

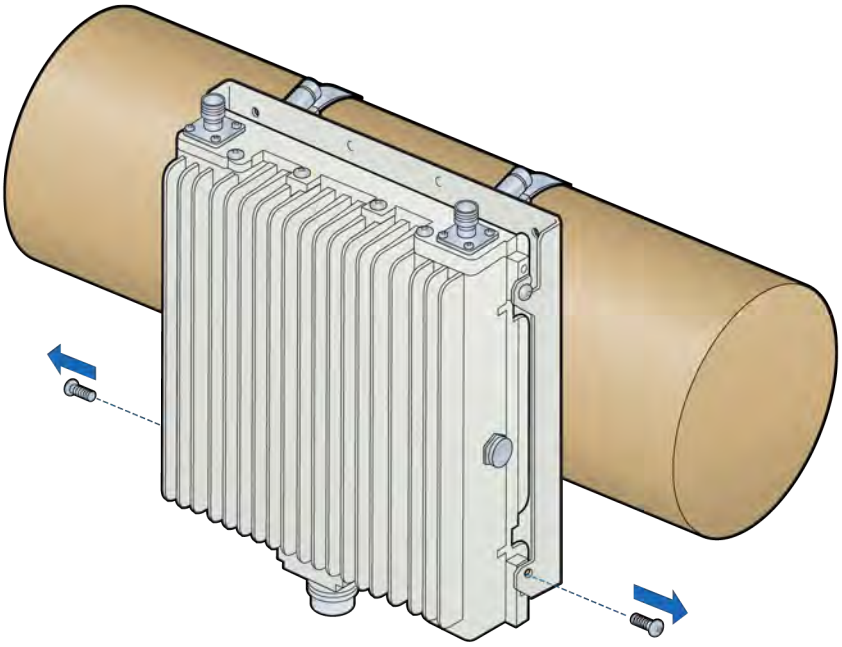

3 Lift the failed RP off of the mounting plate and set it aside.

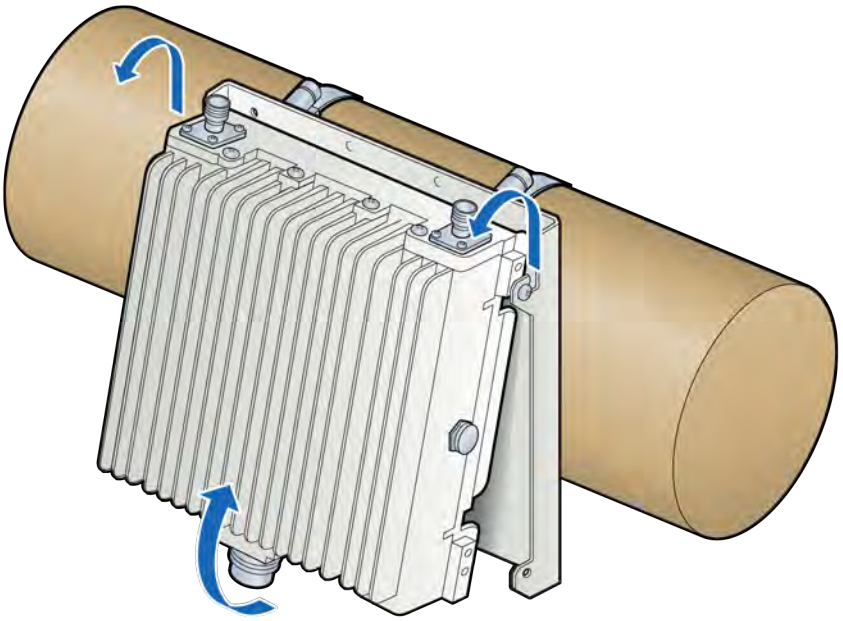

4 Insert two screws into the upper holes on the replacement RP.

NOTE: Do not tighten the screws.

CAUTION

Ensure that the RP is oriented correctly with the two antenna connectors at the top of the RP.

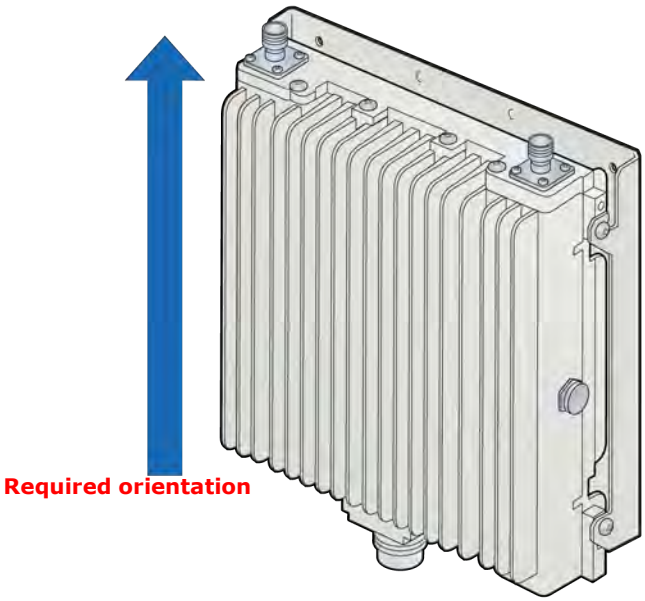

5 Attach the RP to the mounting plate. Tighten the top screws on the RP and insert and tighten the bottom screws on the RP.

NOTE: The torque requirement for the mounting screws is 20-21 in-lbs.

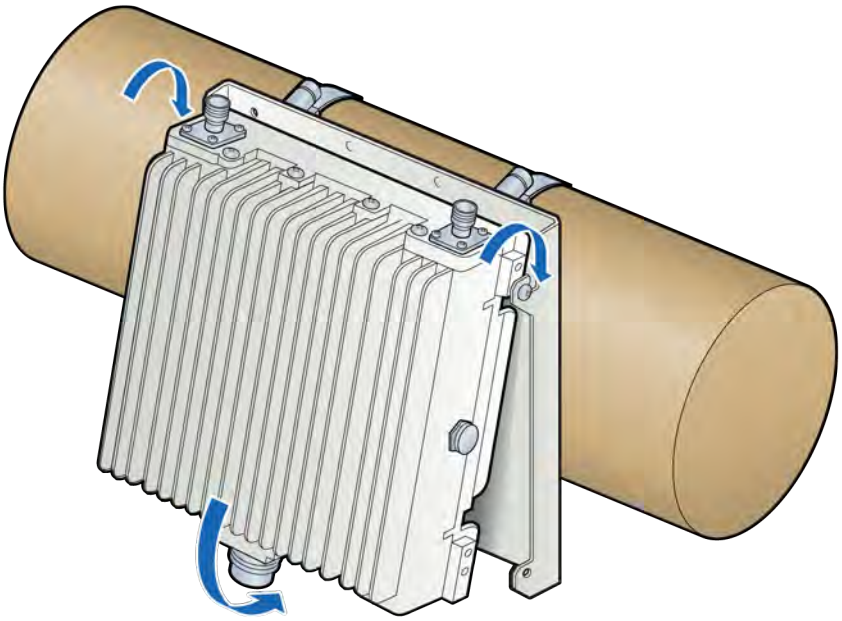

6 Connect the antenna couplers on the top of the RP.

NOTE: Check the antenna coupler manufacturer's documentation for torque requirements.

7 Connect the Ethernet cable RJ45 end to the bottom of the RP.

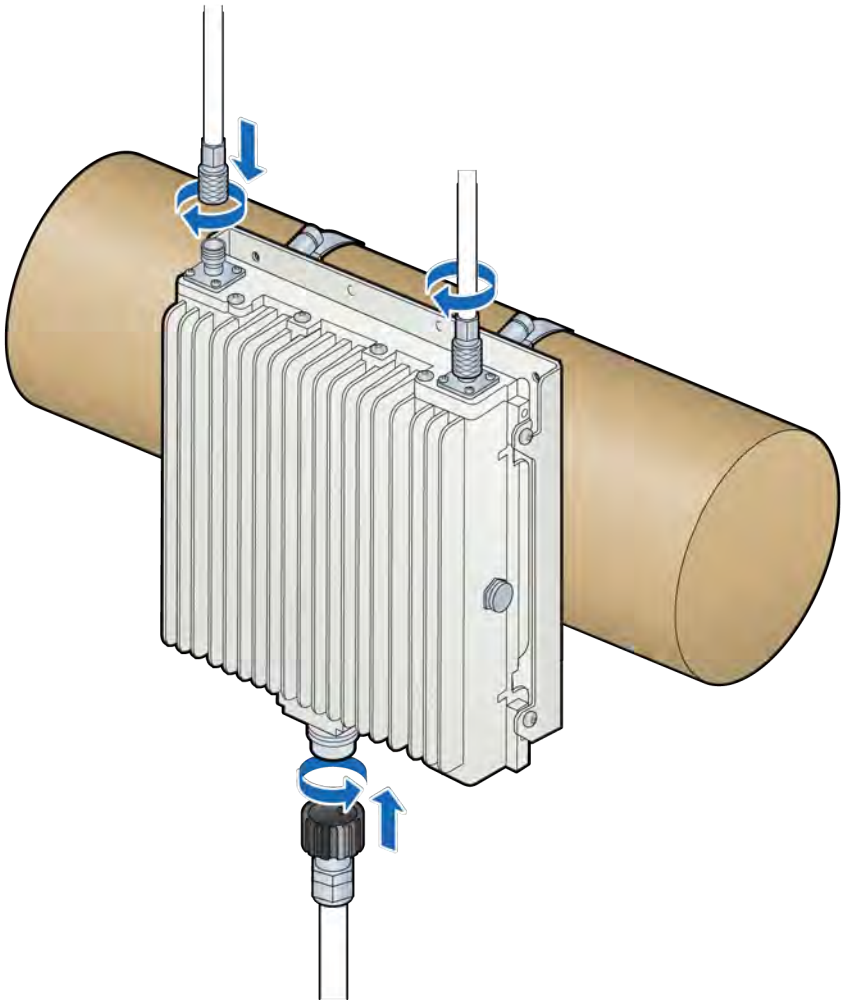

8 Verify the RP installation. See The operational state of the RP can be determined by the LED status on the RP. Additional information can be attained from the WebGUI status screens.

For verification procedures, see RP post-replacement verification.

Replacing a wall mounted Rugged RP

1 Disconnect the Ethernet cable and the antenna couplers from the RP.

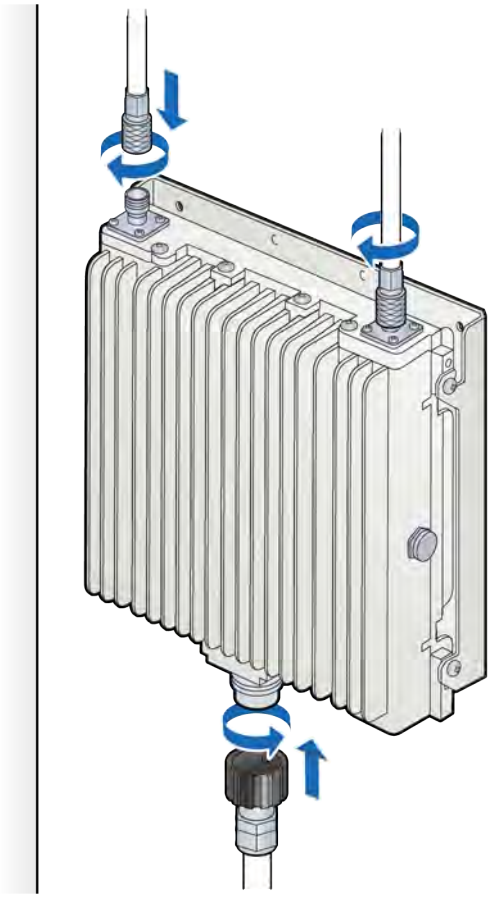

2 Remove the screws on the bottom of the RP, loosen the top screws and remove the RP from the mounting plate. Set the RP aside.

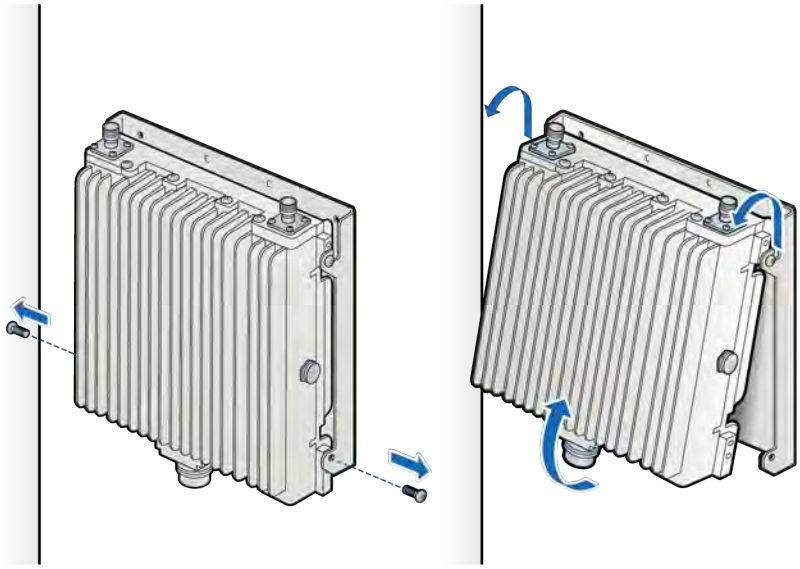

3 On the replacement RP, insert two screws into the upper holes.

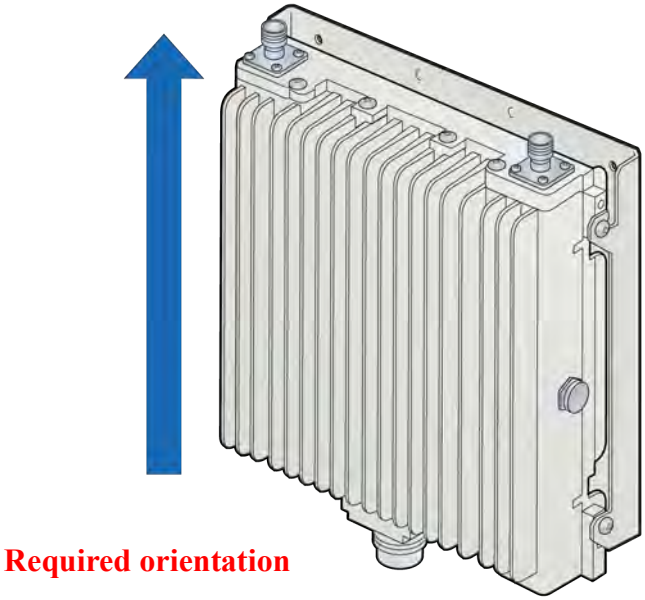

4 Attach the RP to the mounting plate. Tighten the top screws on the RP and insert the bottom screws on the RP.

NOTE: The torque requirement for the mounting screws is 20-21 in-lbs.

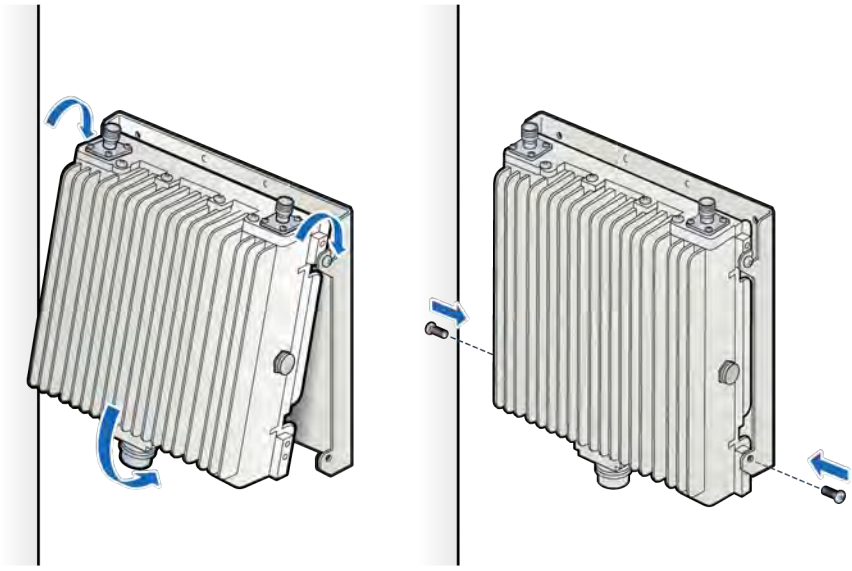

5 Connect the antenna couplers on the top of the RP.

NOTE: Check the antenna coupler manufacturer's documentation for torque requirements.

6 Connect the Ethernet cable RJ45 end to the bottom of the RP.

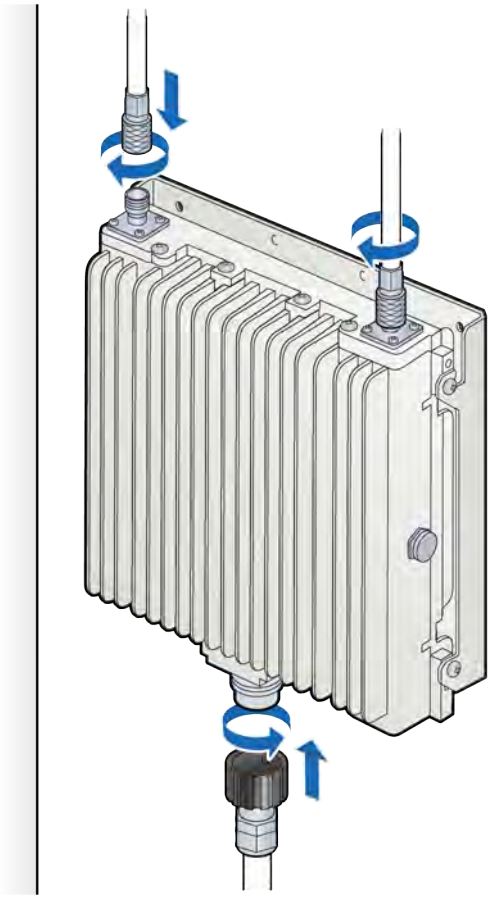

7 The operational state of the RP can be determined by the LED status on the RP. Additional information can be attained from the WebGUI status screens.

For verification procedures, see RP post-replacement verification.

RP post-replacement verification

The operational state of the replaced RP can be determined by the LED status on the RP. Additional information can be attained from the WebGUI status screens.

1 Connect the Ethernet cable to the MGMT port on the BC's front panel.

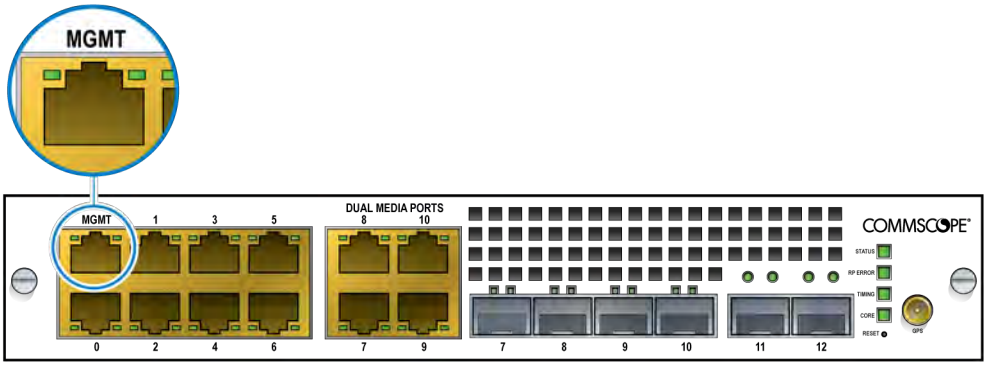

2 Open a supported browser.

3 Enter the IP address for the GUI, using the format below.

https://<IP address of Management Interface>:6002

Example:

`https://192.168.8.1:6002`

The Sign In dialog box appears.

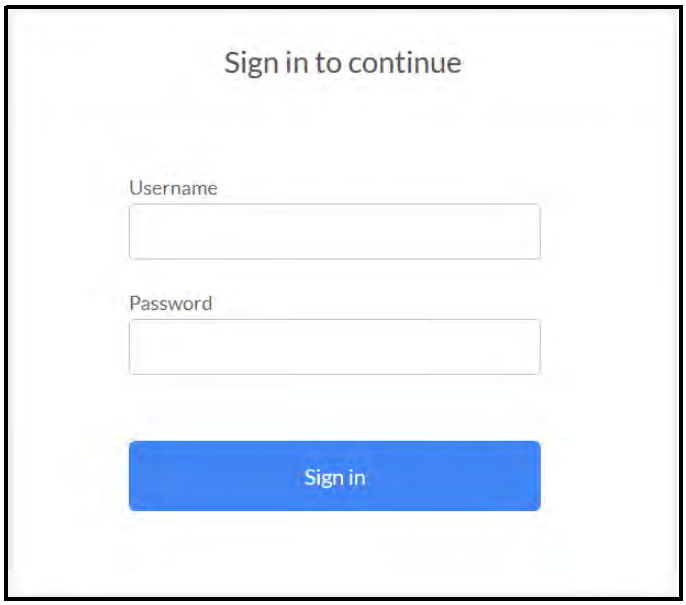

4 Ensure the WebGUI is operating in Management Mode. The Dashboard displays.

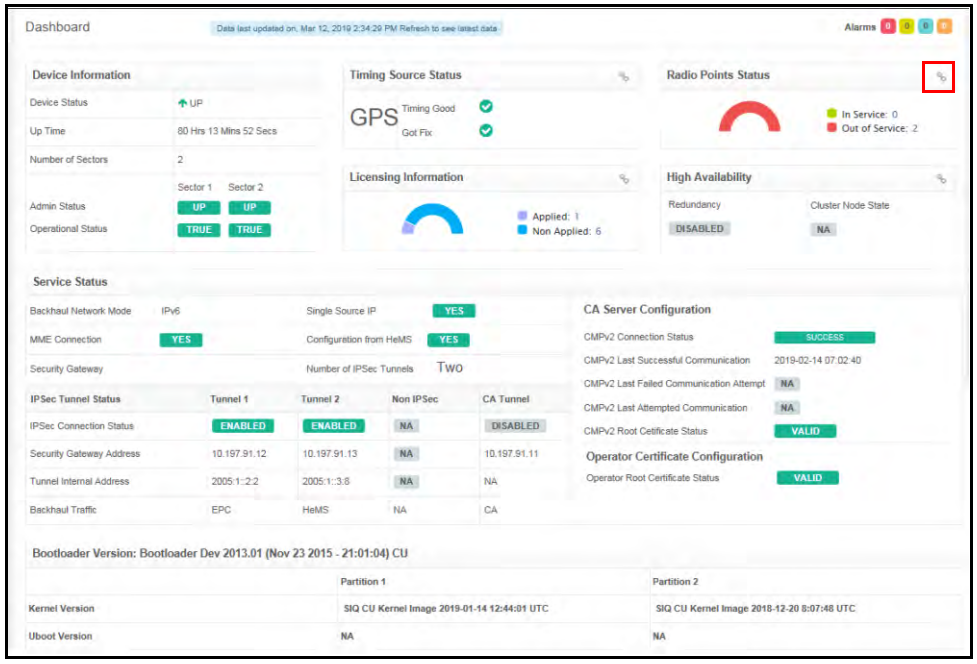

5 On the Dashboard, click the Radio Points link. The Radio Points Dashboard displays.

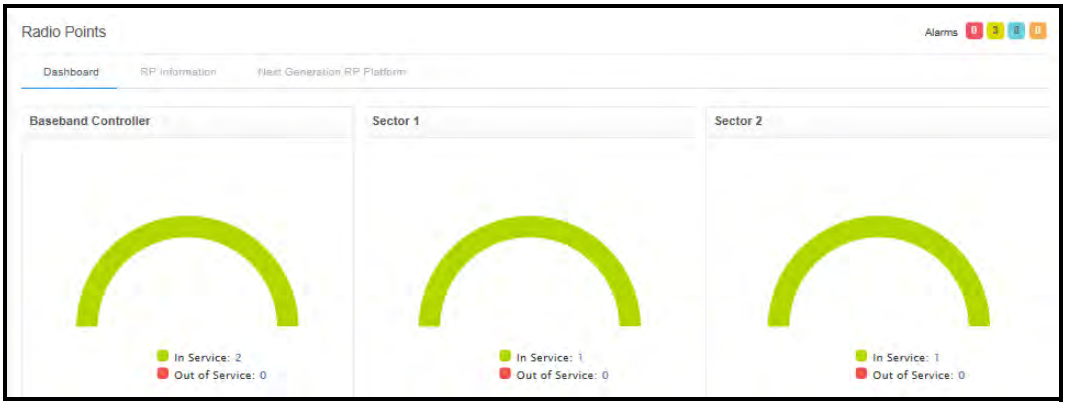

6 Click the RP Information tab. The RP Information page displays.

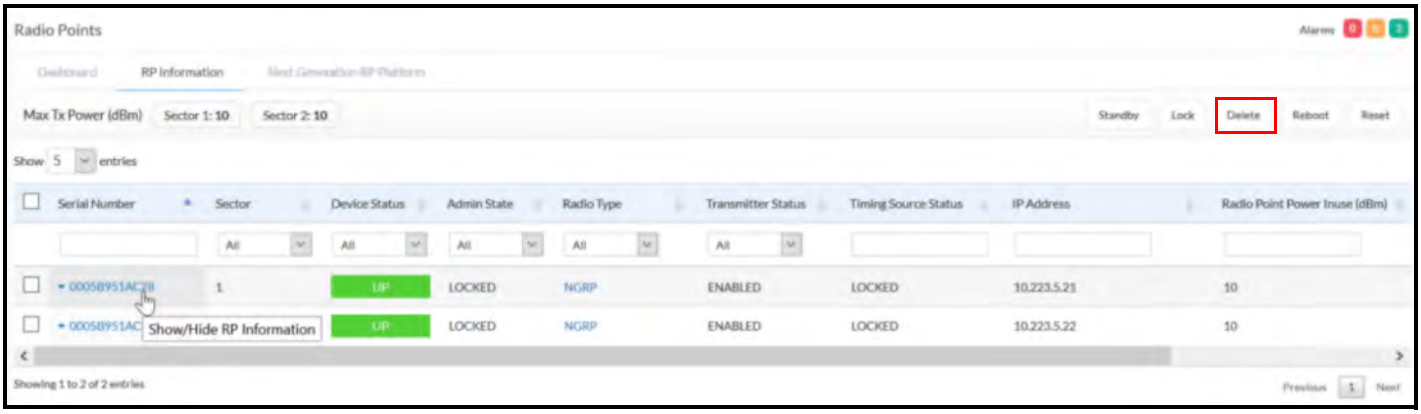

7 Make sure the replaced RP is UP.

Appendix E

Cable installation and power separation guidelines

This section contains best practices for installing Ethernet cables and connecting them to RPs.

Overview	E-2
Cable handling	E-2
Cable termination	E-3
Lightning protection	E-12
Ceiling connector	E-15
Patch panel	E-17
Power separation guidelines	E-17

Overview

When installing Rugged RPs, cables that can withstand temperature extremes and inclement weather should be used. In outside environments, avoid contamination or damage to plugs. Plugs must be protected from sunlight and water in a suitable equipment housing or NEMA 4 rated box. It is also important to avoid exposure to water at cut ends of unfilled cables and cords. The following information is available to help you extend the operation of your RP and switches.

Cable handling

Indoor/outdoor cords can be routed outdoors above ground and indoors, and can be ordered in lengths long enough for direct (home-run) installations from switch to end equipment. Cords have 20% Insertion Loss De-rating so only 85 meters total can be supported. Extended lengths can be cut in two for terminating the indoor ends at protectors or panels. Terminations are similar to typical 4-pair indoor cables.

Unreel long lengths of cable to ensure the cable does not become twisted or caught on objects.

Figure E-1. Unreel cable

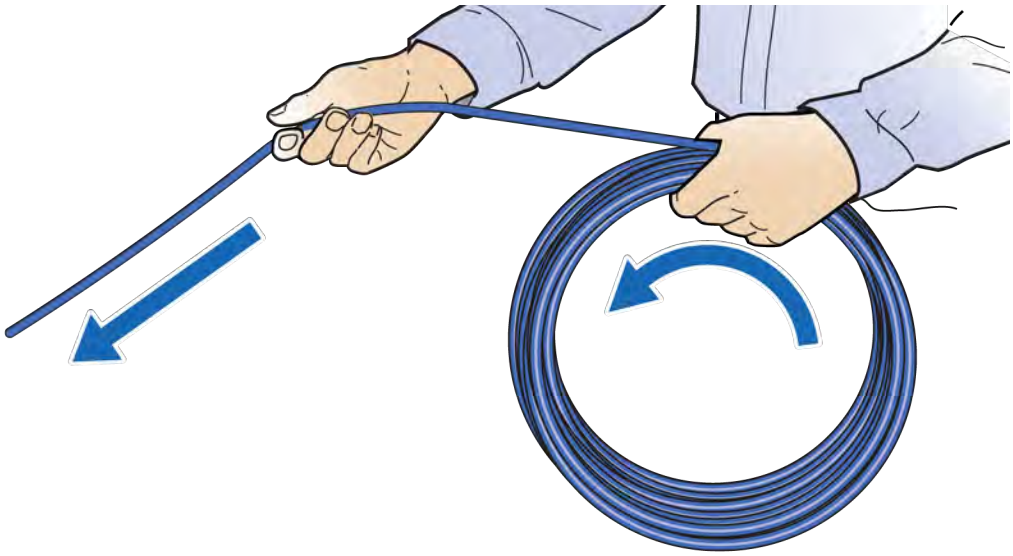

CommScope recommends using a sock fitted and secured over the plug to pull cable through long conduits.

Sock information

Tie wrap information

Figure E-2. Cable with sock attached using tie wrap

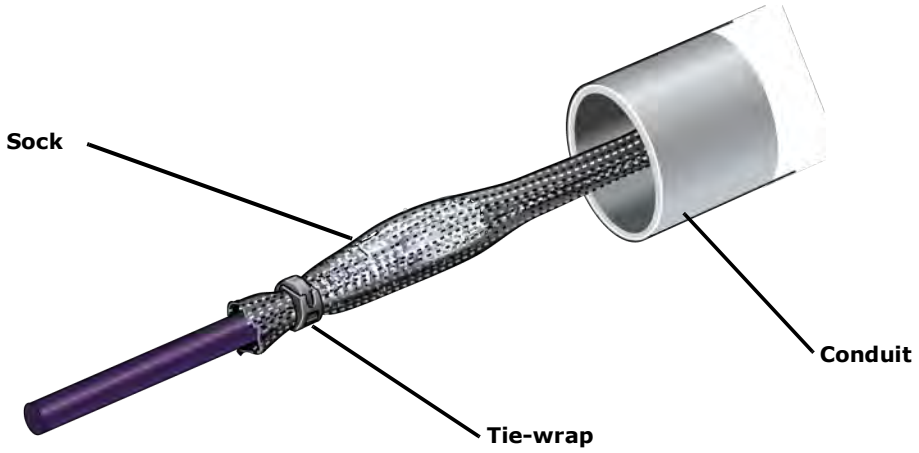

Feed the sock through the conduit and secure the sock on the terminal end of the cable with the tie-wrap. Once the sock and tie-wrap are in place, pull the cable through the conduit.

Cable termination

Before installing the Rugged RP, terminate the RP end of the Ethernet cable with the RJ45, IP67 connector provided in the box.

Figure E-3. RJ45, IP67 connector

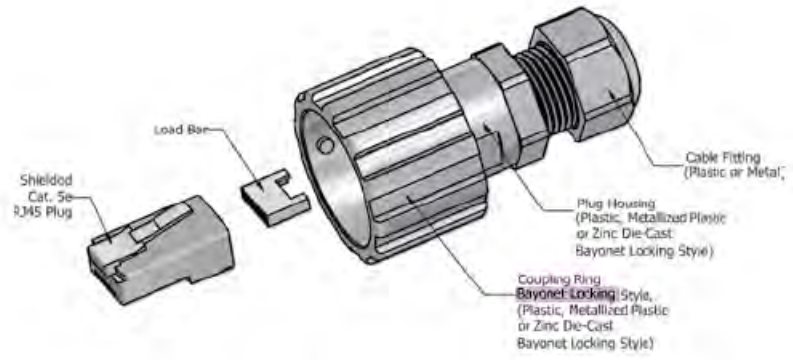

Flip the plug anti-snag to make it easier to push through the cord grips (flip it back before plugging in).

Use the split grommet provided. Once it is in place, coat it with silicone to ensure the connector is sealed.

Figure E-4. Assembling the connector on the RP end

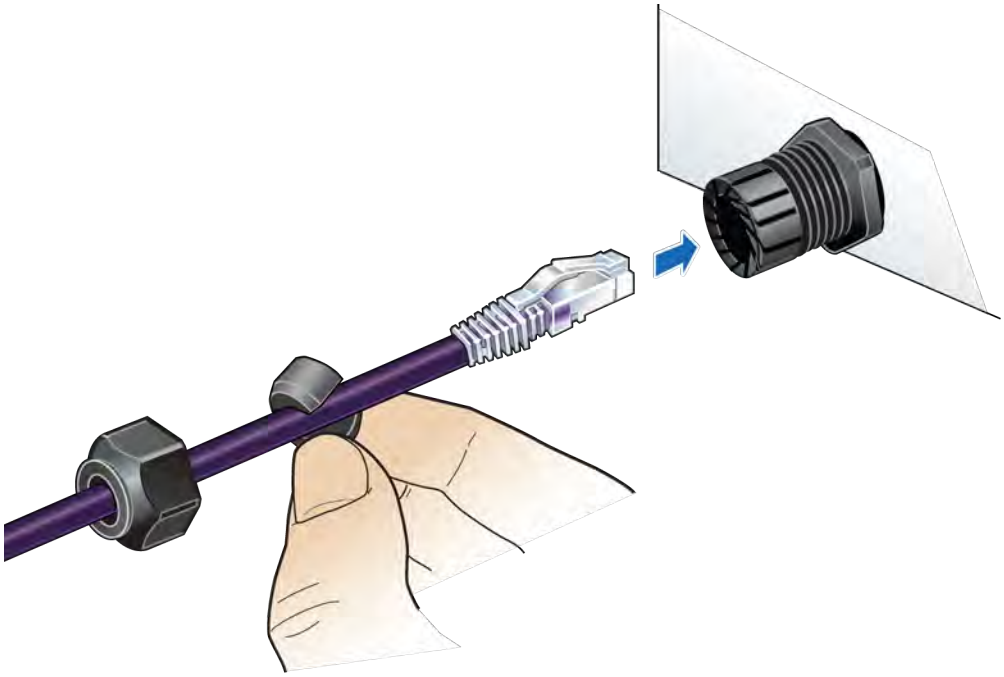

Cable splicing

Some cables are run in one piece from source to destination and have connector terminations. In other cases, two shorter pieces of cable need to be spliced together. When a cable is run to outdoor devices, you should take measures to ensure that cables are properly protected against moisture entering the cable. This is especially important when the jacket is stripped back from the wires.

Some cables are gel filled and the termination includes cleaning the excess gel and blocking the end with silicone sealant to prevent future leakage. A typical blocking method uses a 2 cm length of Alpha Wire PVC-105-2 tubing or equivalent.

1 Fill all space inside the tubing with B-sealant.

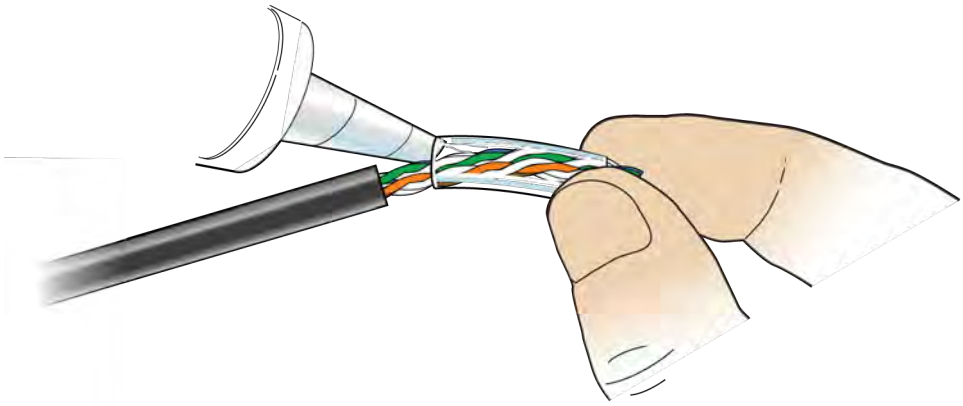

2 Position the filled tube to overlap the end of the inner jacket and seal the gel. Clean off all excess sealant.

NOTE: Tape can be used to stabilize the tube for immediate termination before the sealant sets.

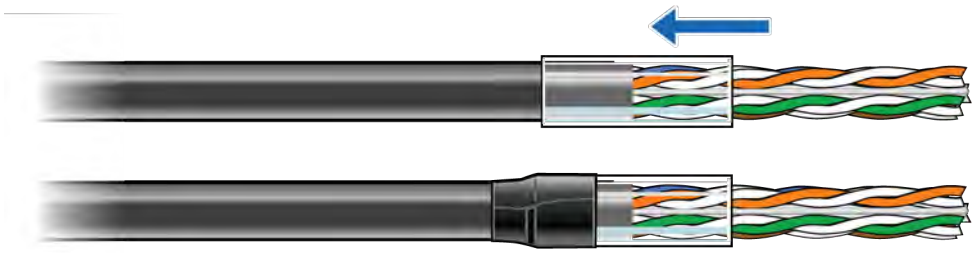

Cable termination

Shielded cables must be properly terminated, either grounded or isolated. For exposed installations requiring protection, the end of the shield can be bonded in various ways. The following procedure is an example of one method.

1 Make a slit along the length of the jacket. Be careful not to tear the underlying shielding.

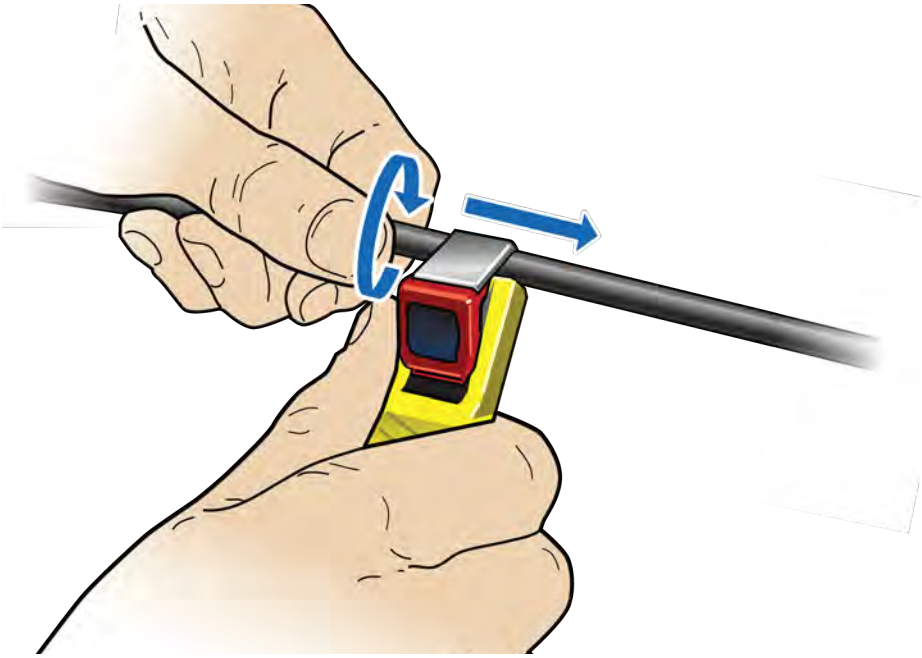

2 Pull back the jacket along the slit and remove.

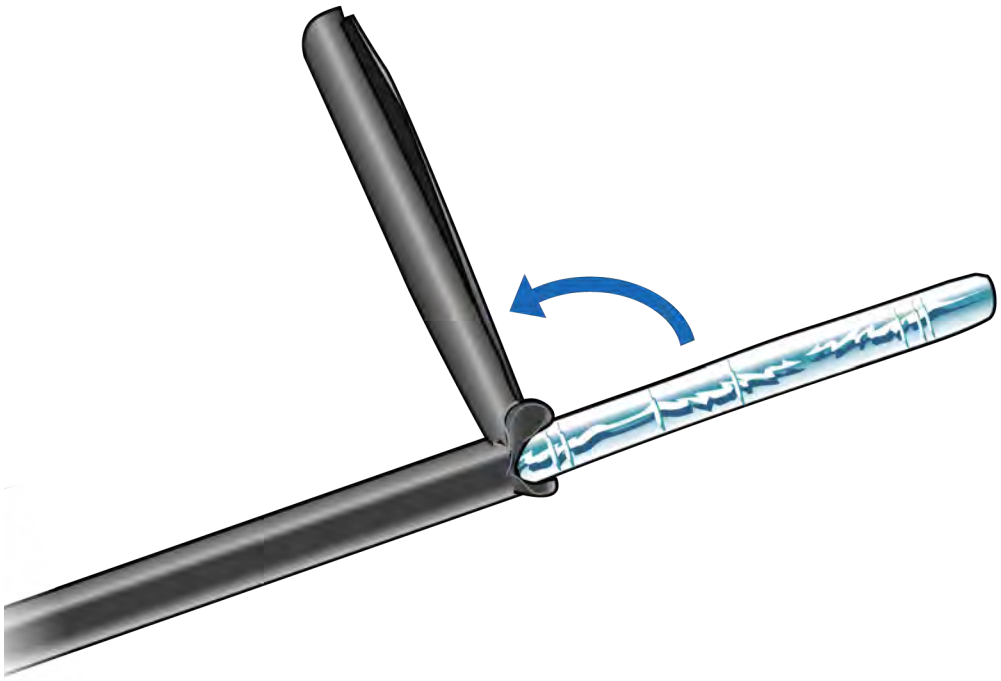

3 Fold back the foil shielding and drain wire to expose the inner jacket.

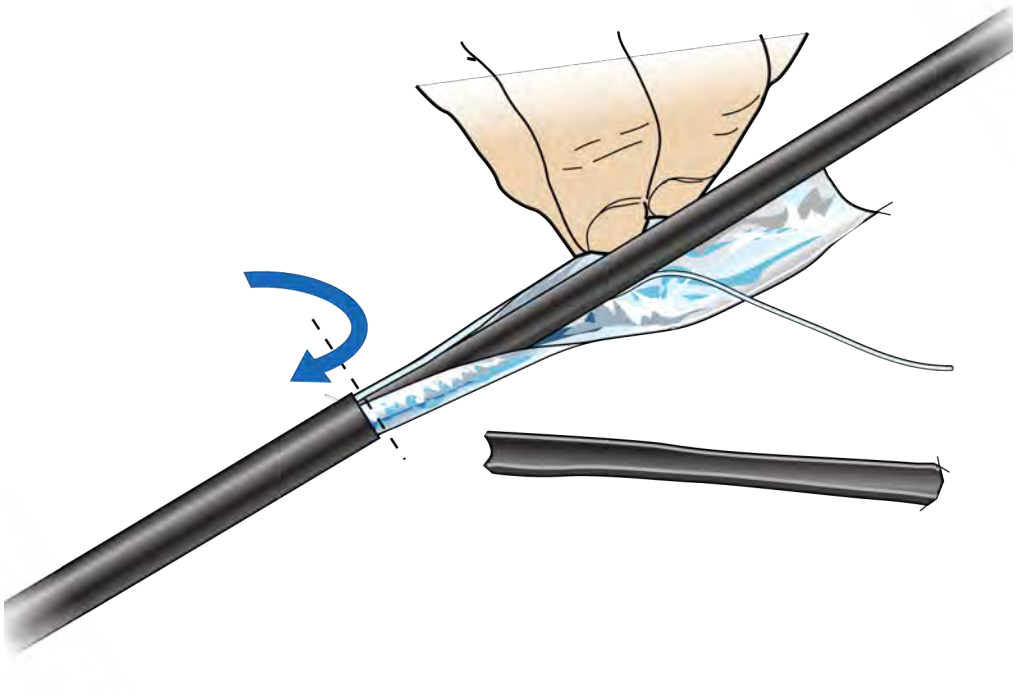

4 Prepare the inner jacket for blocking the gel and direct burial.

- **a** Cut back the inner jacket
- **b** Trim the flute
- **c** Clean the excess gel

NOTE: The flute can be cut longer to match the blocking tube length.

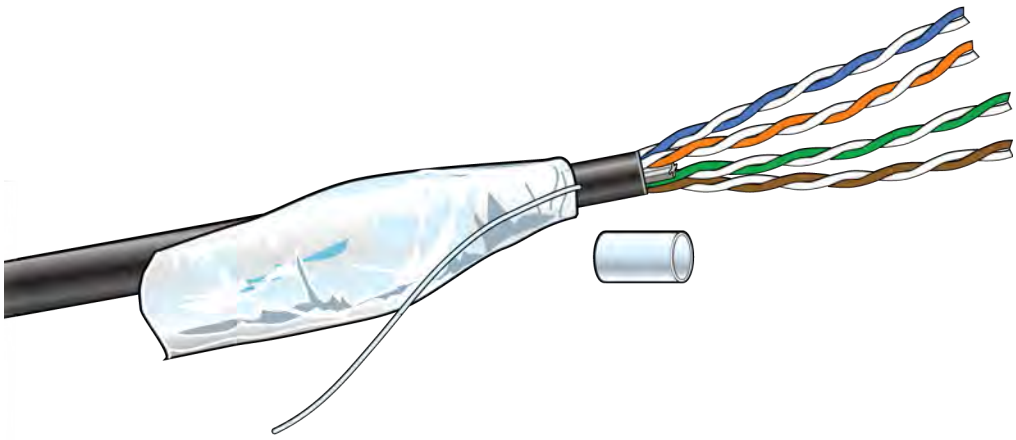

5 Fill all space inside the tubing with B-sealant and position the filled tube to overlap the end of the inner jacket and seal the gel.

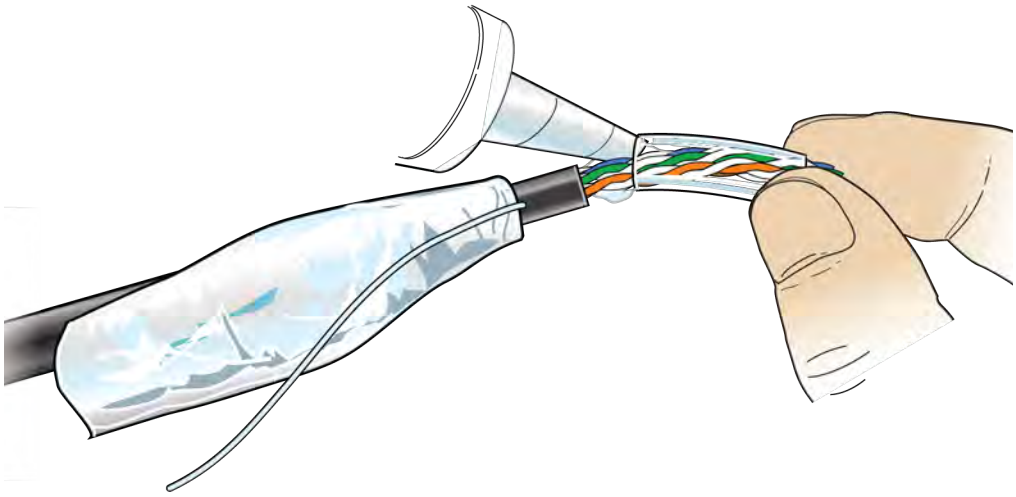

6 Fold the drain wire and foil back over the tube and position the foil to be folded back over the tube.

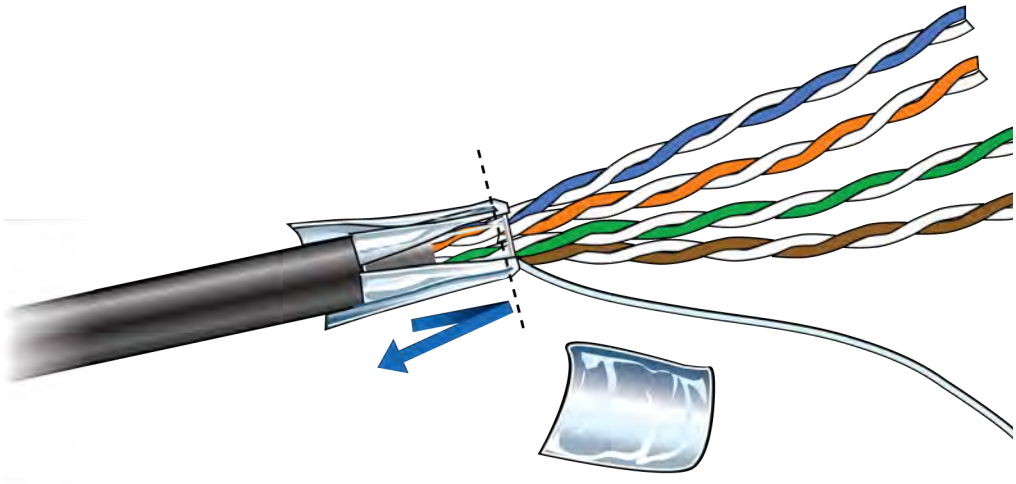

7 An extra piece of foil can be used to cover the foil seam.

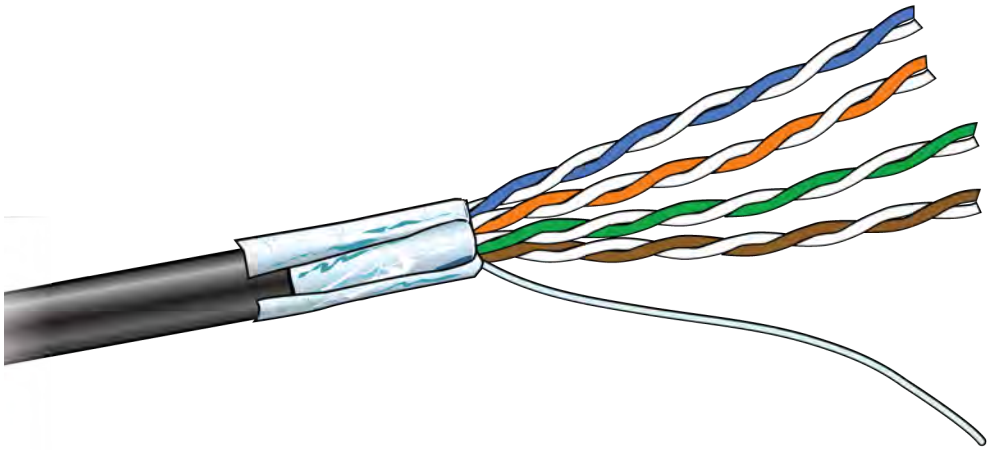

8 For an HGS620 termination, wrap the drain wire at least two times around and position it where the spring clips will capture them.

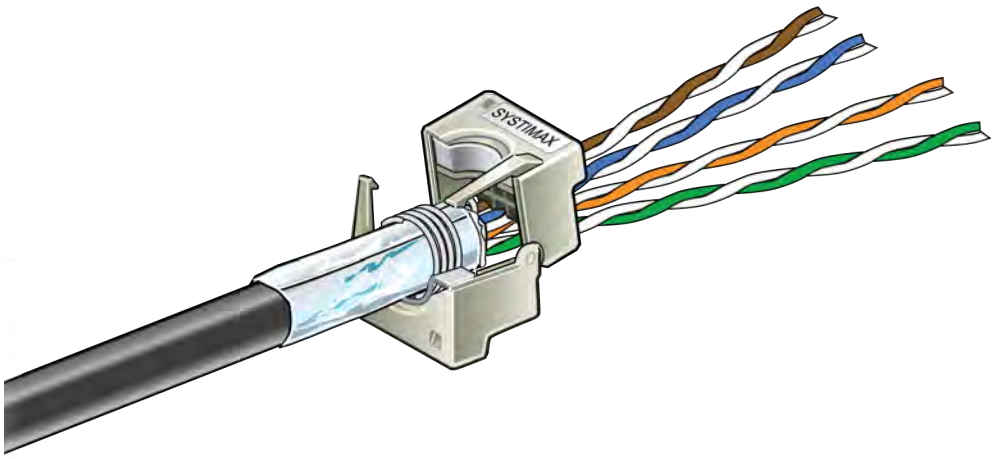

9 Tape over the foil for stability.

10 Trim the wire ends.

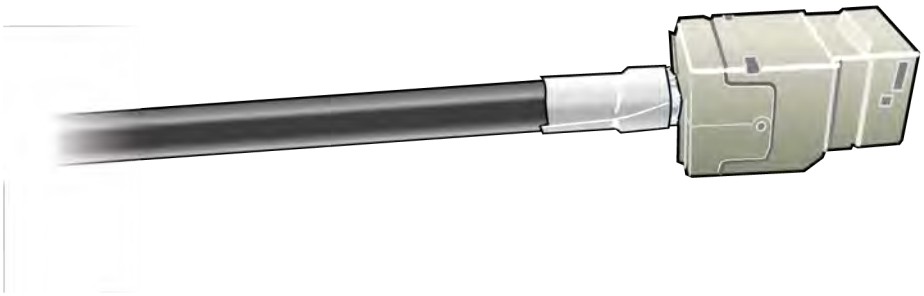

Cable grounding

For CAT-6A cables, the shield termination method is to use the ground lug and B-bond clip that are available in the 12A1 Grounding Kit.

1 Fold the foil back over the jacket end and wrap the drain wire around the end and push the ground lug over the wrap.

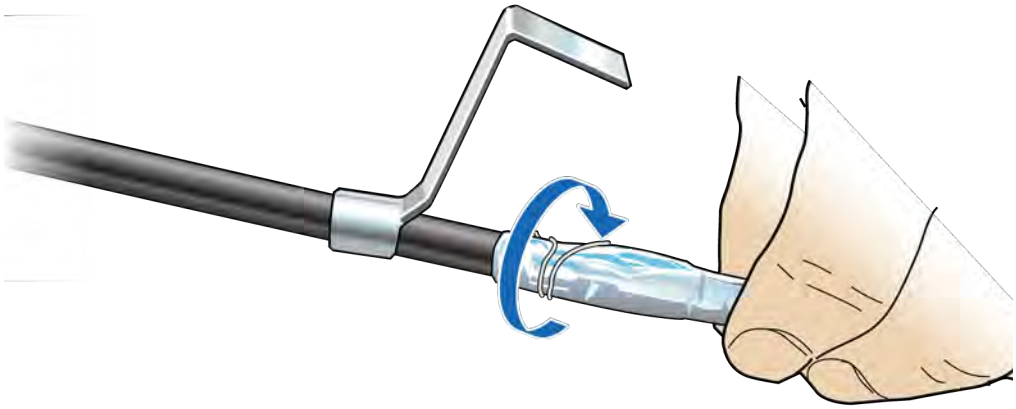

2 Open the B-bonding clip to be placed and closed over the grounding lug.

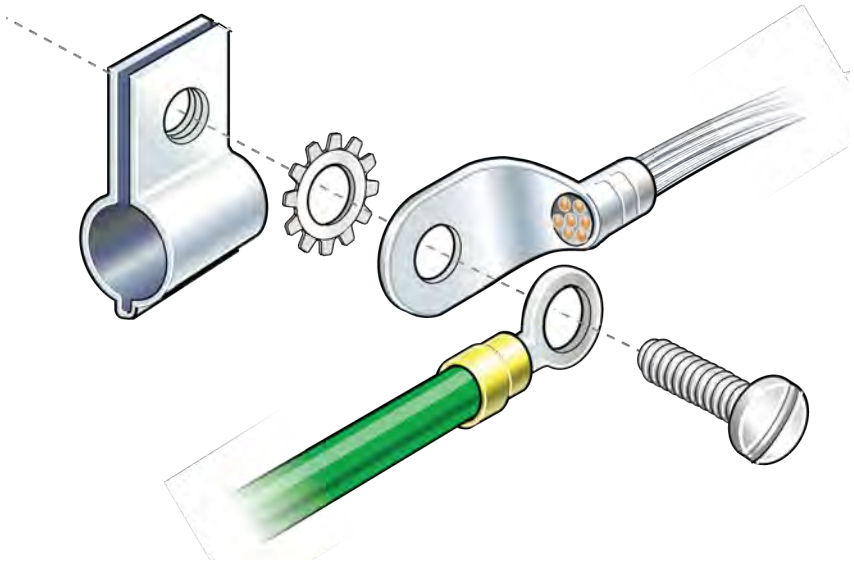

3 The lug tail can be cut off or used for ground attachment.

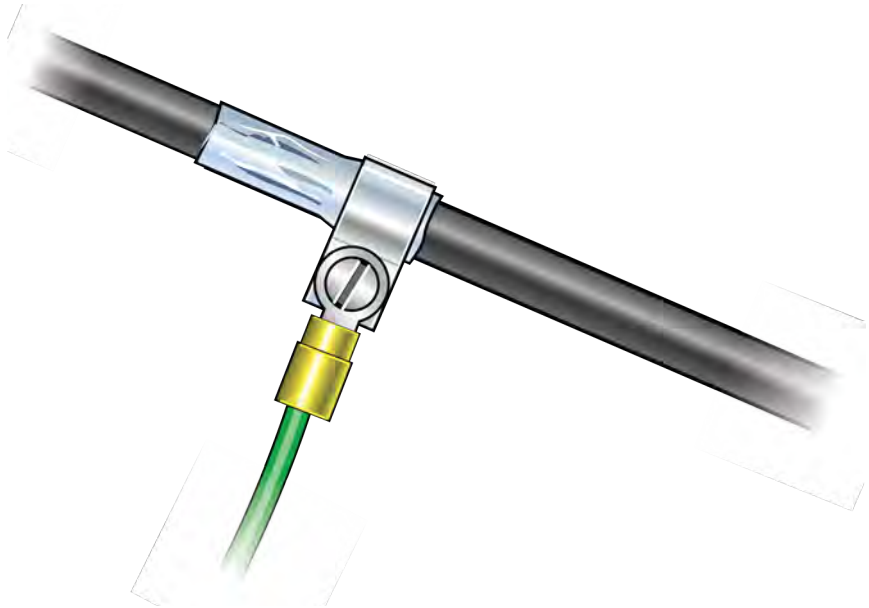

4 Treat the inner jacket as described in step 4 on page E-7.

For an isolated shield termination, the 1572A and 1592A outer jacket foil and drain wire are removed a short distance back from the termination and electrical tape is used to isolate the foil end.

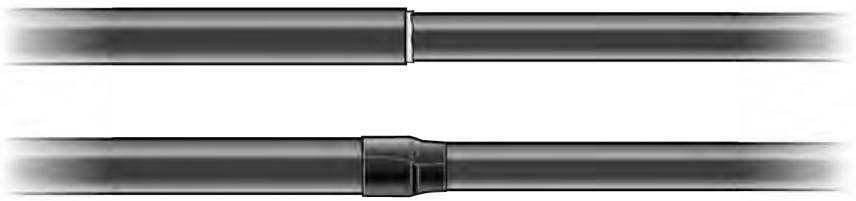

Lightning protection

CommScope recommends including lightning protection in your ONECELL system to isolate equipment from surge damage.

Important guidelines

- Verify hole diameter – blocking may need to remain outside the cover
- Maintain pair twists up to termination points
- Avoid having pairs crossing over each other

Indoor box

To protect the cables in an indoor installation from lightning damage, CommScope recommends using the ITW Linx CAT6-A-LAN protector.

NOTE

The gel filled outdoor cable types will still need blocking. See Cable splicing and Cable termination for instructions on blocking cable.

Figure E-5. CAT6-A lightning protector

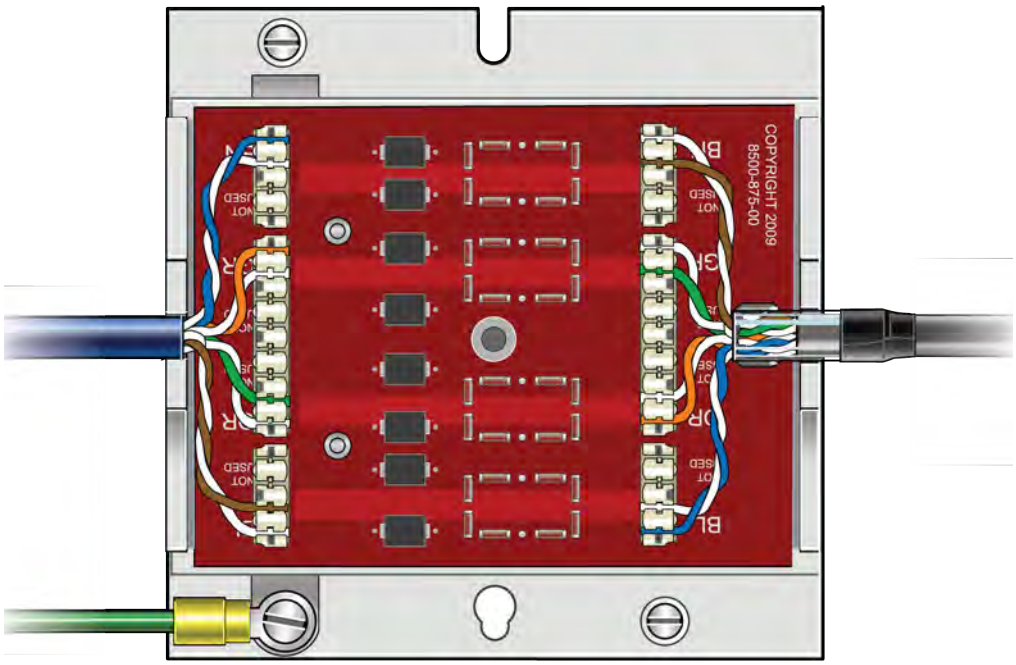

Outdoor protection

The following is an example of a pole mounted CAT-6A configuration for protecting remote equipment installed outdoors.

Table E-1 lists the recommended parts for installing the protection equipment.

Table E-1. CAT-6A protection equipment parts list

Part Name	Link to Part on Distributor's Web site
NEMA 4x enclosure	Allied Moulded fiberglass enclosure
Back panel	Allied Moulded back panel
Ground buss	Ditek surge protection buss
Bottom Mounted Liquid Tight Cordgrips	Heyco pre-assembled cordgrips
Bottom Mounted Liquid Tight Bushing	Heyco liquid tight bushings – snap-in
Protector	Ditek 110RJC6APOE Protector
Pole mount kit	Allied Moulded pole mount kit

Figure E-6. Remote equipment protection for outdoor devices

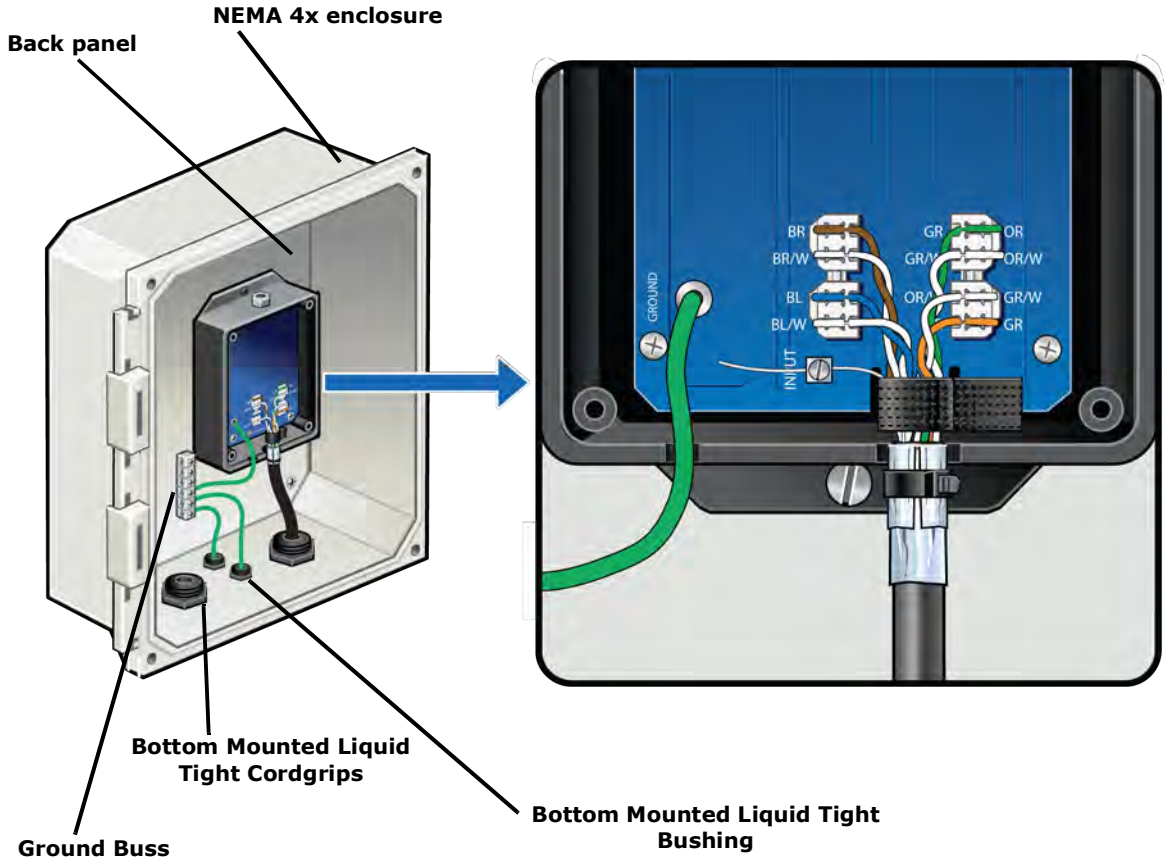

NOTE

Enclosure should be mounted close to the equipment for the best protection.

Figure E-7. Protector box mounted to pole

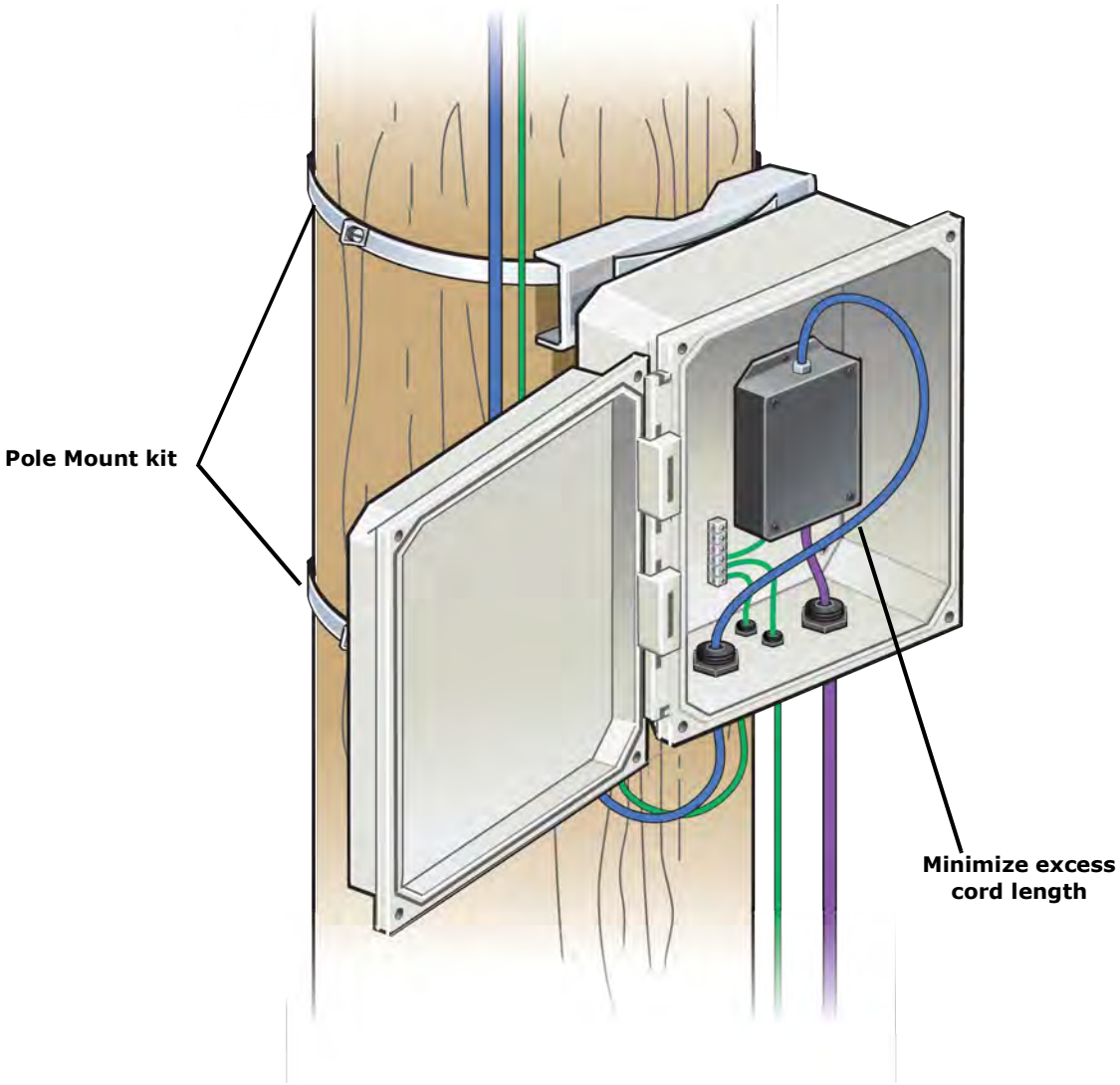

Ceiling connector

If surge protection is not needed, gel flooded cables can be blocked and transitioned to indoor cable using a ceiling connector. The following link is for the recommended CommScope part.

Ceiling connector

1 Terminate the indoor cable first – then lay down a bed of B sealant.

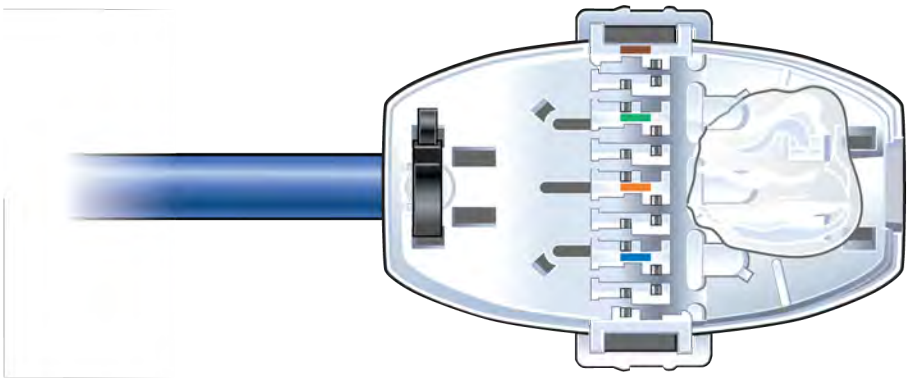

2 Clean all gel from the end of the OSP cable.

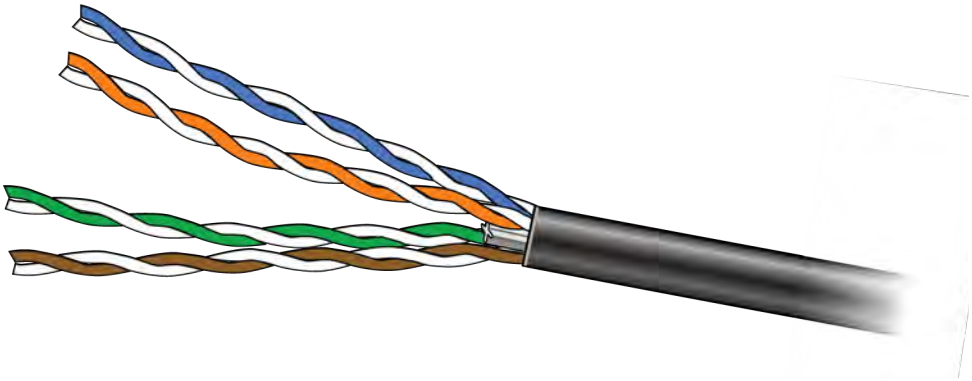

3 After the cable and conductors are positioned, fill the area around the cable end with sealant and close the connector housing.

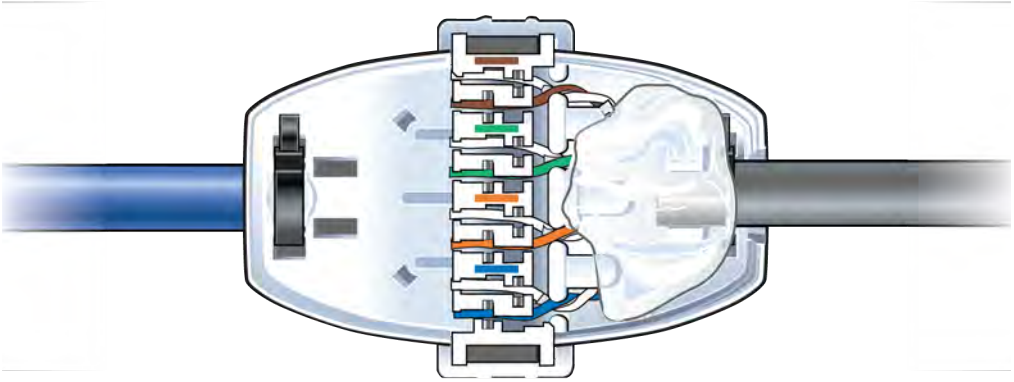

Patch panel

CommScope recommends installing a patch panel in the NOC to connect and manage CAT-6A cables. The following is a list of recommended CommScope 24 and 48 port patch panels and high density information outlets.

- 760163436_HFTP-HD6B-1U-24
- 760163444_HFTP-HD6B-2U-48
- 760163451_HFTPA-HD6B-1U-24
- 760163469_HFTPA-HD6B-2U-48
- 760163519_HFTP-J6
- 760163527_HFTP-J10G

For more information, go to CommScope.com or contact your CommScope customer representative.

Power separation guidelines

For power separation best guidelines, refer to the following standards:

- Telecommunications Pathways and Spaces, TIA-569-C
- Information technology – Implementation and operation of customer premises cabling – Part 2: Planning and installation, ISO/IEC 14763-2
- Information Technology – Cabling Installation – Part 2: Installation Planning and practices inside buildings, BS EN 50174-2

ONECELL® Hardware Installation, Release 5.5
M0304AC 5.5.01 July 2021

COMMSCOPE®