COMMSCOPE®

ONECELL®

RP5200 Hardware Installation Guide

Release 5.5

Document Number: **M0304AG**

Document Revision: **5.5.06**

Date: **December 2021**

Copyright © 2021 CommScope, All rights reserved.

THIS DOCUMENT HAS BEEN DEVELOPED BY COMMSCOPE, AND IS INTENDED FOR THE USE OF ITS CUSTOMERS AND CUSTOMER SUPPORT PERSONNEL.

THE SPECIFICATIONS AND INFORMATION REGARDING THE PRODUCTS IN THIS MANUAL ARE SUBJECT TO CHANGE WITHOUT NOTICE. ALL STATEMENTS, INFORMATION, AND RECOMMENDATIONS IN THIS MANUAL ARE BELIEVED TO BE ACCURATE BUT ARE PRESENTED WITHOUT WARRANTY OF ANY KIND, EXPRESS OR IMPLIED. USERS MUST TAKE FULL RESPONSIBILITY FOR THEIR APPLICATION OF ANY PRODUCTS.

THE SOFTWARE LICENSE AND LIMITED WARRANTY FOR THE ACCOMPANYING PRODUCT ARE SET FORTH IN THE INFORMATION PACKET THAT SHIPPED WITH THE PRODUCT AND ARE INCORPORATED HEREIN BY REFERENCE. IF YOU ARE UNABLE TO LOCATE THE SOFTWARE LICENSE OR LIMITED WARRANTY, CONTACT YOUR COMMSCOPE SALES REPRESENTATIVE FOR A COPY.

Contents

Document revision history

About this document

Audience xi
Purpose xi
What you need to know xi
Customer documentation xi
Conventions xiii
Notes, cautions, and warnings xiv

Chapter 1
CommScope ONECELL® overview

Overview 1-2
CommScope ONECELL system 1-2
ONECELL hardware components 1-3
Baseband Controller physical ports 1-3

Chapter 2
RP5200i installation

RP5200i installation overview 2-2
Ceiling mount 2-3
Mounting the Radio Point on the ceiling tile 2-4

Appendix A
Safety

Radiation Exposure Statement A-2
FCC Part 15 ..... A-2
EN55032 ..... A-2
Human exposure limits for ONECELL deployments A-2
Reference documents A-4
FCC ID A-5
RP5200 ..... A-5

Appendix B
Installation troubleshooting

Radio Point RP5200 LED patterns B-2

Appendix C
Specifications

Environmental and physical specifications C-1
SPF/SPF+ specifications C-2

Appendix D
Field Replaceable Units

FRU overview D-2
Replacing RP5200i radio point D-2
Replacing RP5200i radio modules D-7

Appendix E
Cable installation and power separation guidelines

Overview E-2
Cable handling E-2
Cable termination E-3
- Cable splicing E-4
- Cable termination E-5
- Cable grounding E-10

Lightning protection E-12
- Important guidelines E-12
- Indoor box E-12
- Outdoor protection E-13

Ceiling connector E-15
Patch panel E-17
Power separation guidelines E-17

List of figures

Figure 1-1 ONECELL solution 1-3
Figure 1-2 Baseband Controller ports 1-5
Figure 2-1 CommScope ceiling mounting kit 2-3
Figure 2-2 Drop rail 2-4
Figure E-1 Unreel cable E-2
Figure E-2 Cable with sock attached using tie wrap E-3
Figure E-3 RJ45, IP67 connector E-3
Figure E-4 Assembling the connector on the RP end E-4
Figure E-5 CAT6-A lightning protector E-13
Figure E-6 Remote equipment protection for outdoor devices E-14
Figure E-7 Protector box mounted to pole E-15

List of tables

Table 1 Customer documentation xii
Table 2 Conventions xiii
Table 1-1 Baseband Controller physical port assignments 1-4
Table A-1 RF exposure for ONECELL at maximum power internal antennas for RP5200 ..... A-3
Table C-1 Environmental and Physical specifications C-1
Table E-1 CAT-6A protection equipment parts list E-13

Document revision history

The following section lists documentation changes in *ONECELL®RP5200 Installation Guide, v5.5* (M0304AG).

Revision 5.5.06 (December 3, 2021)

- Removed Draft watermark

Revision 5.5.05 (November 2, 2021)

- Added Appendix D, Field Replaceable Units

Revision 5.5.04 (October 6, 2021)

- Revised drawings in Chapter 2, RP5200i installation

Revision 5.5.03 (July 9, 2021)

- Changed RP5100 to RP5200 in FCC Part 15 on page A-2
- Removed Green, blinking row for Eth 1 and Eth 2 in table under Radio Point RP5200 LED patterns on page B-2

Revision 5.5.02 (April 28, 2021)

- Revised notes under RP5200i installation overview on page 2-2
- Replaced drawing under step 3 on page 2-5 and step 6 on page 2-7

Revision 5.5.01 (April 20, 2021)

- Initial document release

About this document

This document provides the procedures for installing RP5200 Radio Points.

Audience

This document is written for computer hardware installers and administrators, network architects and business planners who are responsible for the planning and design of the CommScope ONECELL deployment environment.

Purpose

This guide provides the information necessary for installing the RP5200 hardware in the operator's network.

What you need to know

The reader should have a basic understanding of:

- Data networks
- LTE technology
- General telecommunications practices

Customer documentation

The following table lists available documents in the ONECELL documentation suite.

Table 1. Customer documentation

Title	Contents
ONECELL® Installation Guide, v5.5 (M0304AC)	Includes detailed installation instructions for Baseband Controller and Radio Points hardware.
ONECELL® Feature Guide, v5.5 (M0304AE)	Contains a description of anchor features for the current and previous releases, and a system overview, including CommScope provided components and required components from other vendors.
ONECELL® Network Planning Guide, v5.5 (M0304AF)	Describes main components of the ONECELL system, high-level view of hardware components, how do you engineer an in-building system, how do you determine Radio Points locations, and how to design in-building systems. Contains best practices for deployment, including when to use clustering, and how to manage capacity.
ONECELL® RP5200 Installation Guide, v5.5 (M0304AG)	Includes detailed installation instructions for RP5200 Radio Points hardware.
OM and KPI Reference for ONECELL® Devices, v5.5 (M0304AK)	Describes the operational measurements and key performance indicators for ONECELL devices.
ONECELL® Troubleshooting, v5.5 (M0304AJ)	Covers common troubleshooting scenarios in deployed devices and troubleshooting methods.
ONECELL® Administration, v5.5 (M0304AH)	Describes how to operate, maintain and manage ONECELL devices using the Baseband Controller's Web UI.
ONECELL® Device Alarm Reference (M0304AL)	Includes ONECELL device alarm information.
ONECELL® RP5100 Installation Guide, v5.5 (M0304AP)	Includes detailed installation instructions for RP5100 Radio Points hardware.

Conventions

This guide uses the following text conventions, as applicable.

Table 2. Conventions

Convention	Description
Syntax symbols	
< >	Enclose a required parameter or set of parameters. For example: **>band-class <class>** ***<class>*** is a required parameter.
[ ]	Enclose an optional parameter or set of parameters. For example: **>activate image *<version>* [reboot]** **[reboot]** is an optional parameter.
|	Separates items on a list of parameters, only one of which can be used. For example: **>channel-included <yes|no>** A valid command is: **>channel-included yes**
Font usage	
Bold input font	Indicates text that must be entered exactly as shown. For example: Enter **ping 192.23.10.12**.
Italic input font	Indicates a variable parameter for which you must provide an actual value. For example: **>authentication key *<aukey>*** ***<aukey>*** is a variable parameter. A valid command is: **>authentication key 9782503000**
`Plain output font`	Indicates system output in a command line or system-generated file. For example: `IP address 192.23.10.12 is alive.`
`Italic output font`	Indicates a variable in system output in a command line or system-generated file. For example: `Installation of release <release> is complete.`

Table 2. Conventions

Convention	Description
Plain italic font	Indicates file names, directory paths, book titles, chapter titles, and user accounts.
Bold font	Indicates text that appears on screen exactly as shown, for example, names of screens, names of buttons, items on menus, and items on pull down lists.
blue text	Indicates a hypertext link.
Other conventions	
>	Indicates graphical user interface (GUI) menu path. For example: Select **Edit > Add Network** to open the Add Network screen.

Notes, cautions, and warnings

NOTE

Notes provide additional information about the subject text.

CAUTION

Cautions indicate that procedures, if performed incorrectly, can cause equipment damage or data loss.

WARNING

Warnings indicate that procedures, if performed incorrectly, can harm you.

Chapter 1

CommScope ONECELL® overview

This chapter contains a high level overview of the ONECELL deployment and the ONECELL components installed in the ONECELL system.

Overview	1-2
CommScope ONECELL system	1-2
ONECELL hardware components	1-3

Overview

ONECELL is a revolutionary wireless system that can deliver the ultimate in wireless performance.

- It eliminates cell borders and handovers
- It can cover a large area with consistent user experience without any significant interference
- It can take advantage of multiple distributed radio points to deliver a stronger signal on both the downlink and the uplink
- It can deliver greater capacity through distributed (multi-user and single-user) MIMO and Coordinated Multipoint (CoMP)
- It has the flexibility to neutralize macro interference in co-channel small cell deployments
- It can be used to deliver unprecedented levels of capacity to hot spot areas by deploying radio points with overlapping coverage and enabling multi- user MIMO

In addition to these important benefits in user experience and data capacity, ONECELL provides superior economics and investment protection, ease of deployment and support for multi-operator deployments.

CommScope ONECELL system

ONECELL is an in-building, enterprise solution for LTE that provides an in-building consistent signal. It operates as a wireless network with a single cell, called a Baseband Controller, over distributed Radio Points. Network operators benefit from the ONECELL because they reduce the load on their infrastructure.

Figure 1-1. ONECELL solution

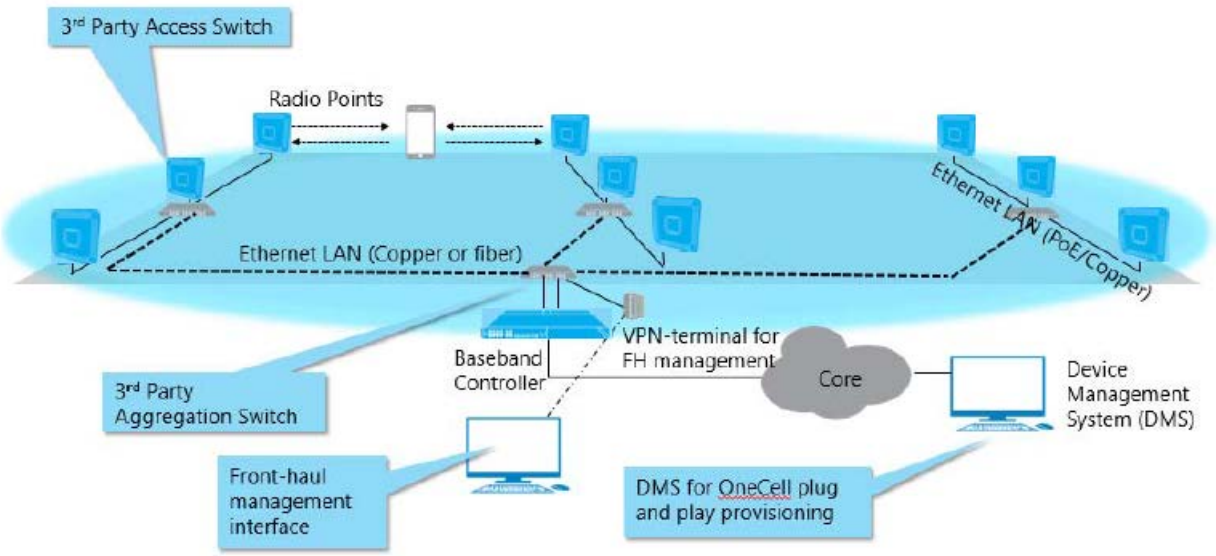

ONECELL hardware components

The ONECELL hardware consists of the following components:

- Baseband Controller
  - Baseband Controller Chassis
  - Baseband Controller Module
  - Power/Fan Unit (PFU)
- Radio Points
  - RP2000 series
  - RP5000 series

Baseband Controller physical ports

The following ports are on the front panel of the Baseband Controller Module. Table 1-1 shows the port assignments. In addition, there is a connector used for the GPS antenna cable.

NOTE

For more detailed BC port information, see *ONECELL® Network Planning Guide, v5.5* (M0304AF).

Table 1-1. Baseband Controller physical port assignments

Port Assignment	Network	Port Speed	Media Type	Description
MGMT	Local Management	1 Gbps	RJ45	**External Interface** to access the WebGUI on the Baseband Controller.
0	Not used	1 Gbps	RJ45	Not used
1-6	IQ Data	1 Gbps	RJ45	**Fronthaul IQ Data Traffic** between the Baseband Controller and Radio Points via an Ethernet switch on copper (RJ45) port.
7	Boundary Clock	1 Gbps	Dual Media RJ45 or SFP	**Boundary Clock Input** of IEEE 1588 PTP Timing signal via dual media port.
8	IPsec	1 Gbps	Dual Media RJ45 or SFP	**Backhaul Traffic** (S1 and OAM Interfaces) via dual media port. VLAN tags are configurable in Dual IPsec mode to separate different traffic streams on the same port.
9	X2 and Redundancy	1 Gbps	Dual Media RJ45 or SFP	**Fronthaul Traffic** for X2 and Redundancy Cluster data via dual media port.
10	RP Management and Timing	1 Gbps	Dual Media RJ45 or SFP	**Fronthaul Traffic** for IEEE 1588 PTP timing and SOAP/XML control data via dual media port. Timing and OAM data traffic between Baseband Controller and Radio Points through an Ethernet switch(s)
11	IQ Data	10 Gbps	SFP+	**Fronthaul IQ Data Traffic** between the Baseband Controller and Radio Points via Ethernet switch on Fiber (SFP) port.
12	Not used	10 Gbps	SFP+	Not used

Figure 1-2. Baseband Controller ports

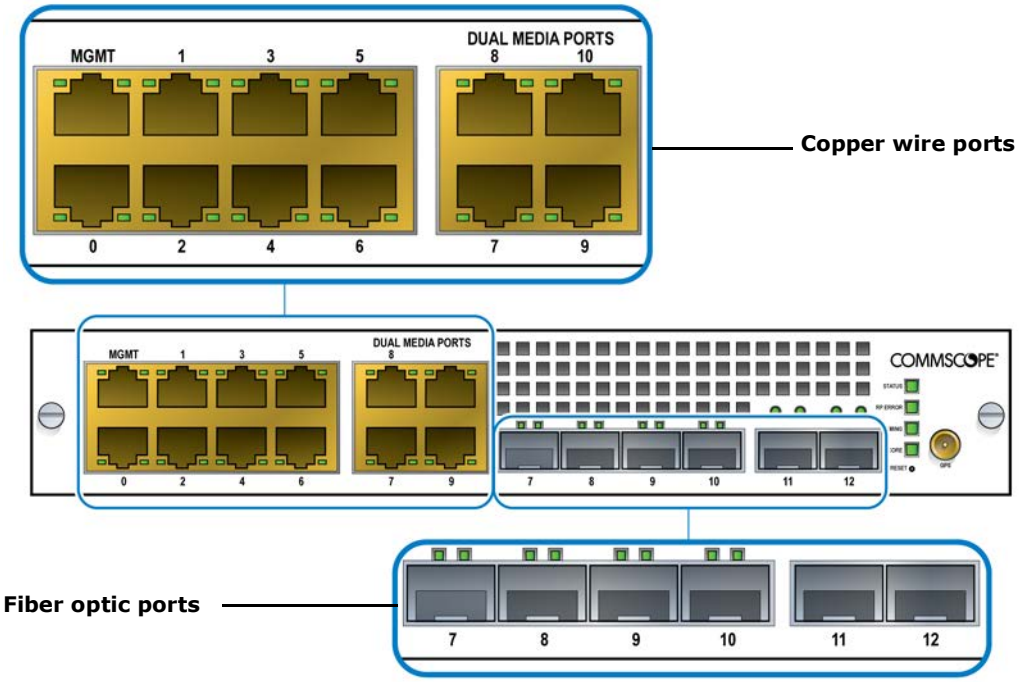

Chapter 2

RP5200i installation

This chapter describes installing RP5200i Radio Points on ceiling tiles, above ceiling tiles, on poles and in a flown configuration.

RP5200i installation overview	2-2
Ceiling mount	2-3

RP5200i installation overview

The RP5200i is a Radio Point for indoor ONECELL solutions.

NOTE

Once the Radio Point is installed and powered on, it may take up to 20 minutes for the frequency to stabilize and lock.

NOTE

The PRIMARY port is the data and power connection; the SECONDARY port is for power only. For more information, see *ONECELL® Network Planning Guide, v5.5* (M0304AF).

Ceiling mount

Mounting the Radio Point (RP) above or on the ceiling tile requires the following hardware provided by CommScope:

- Radio Point plate and screws
- 4" octagon box, 1-1/2" deep with 1/2" side cutouts
- Ceiling plate and screws
- Red primary port cable
- Blue secondary port cable

Figure 2-1. CommScope ceiling mounting kit

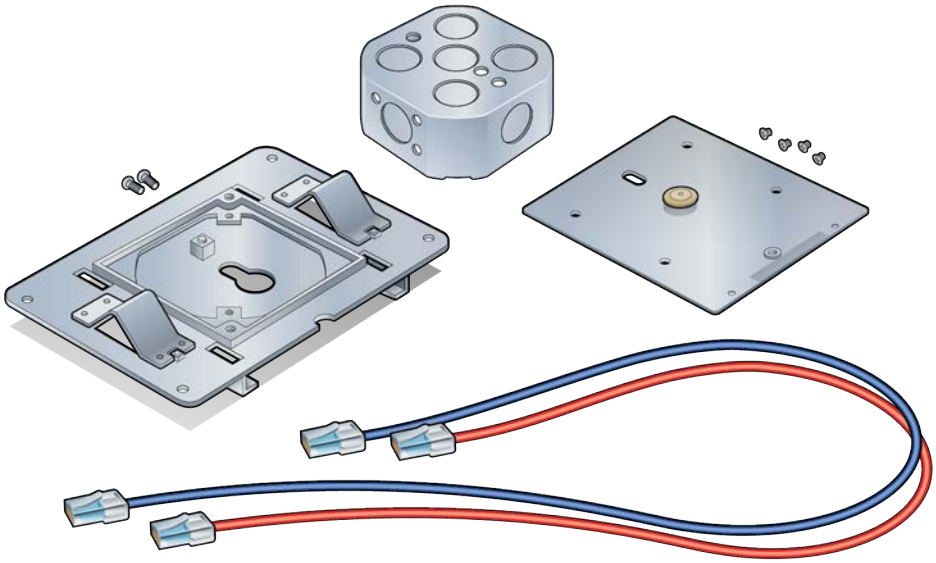

Figure 2-2. Drop rail

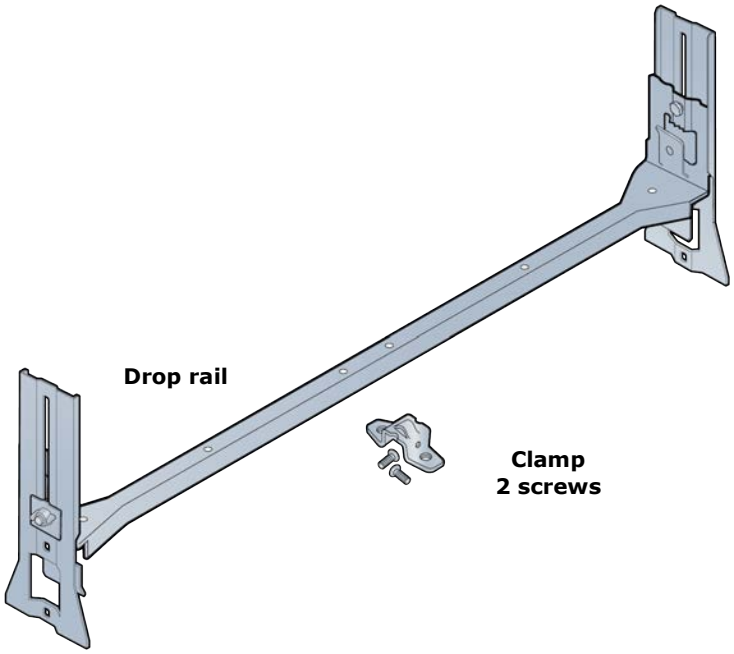

Mounting the Radio Point on the ceiling tile

1 Remove two ceiling tiles from the overhead.

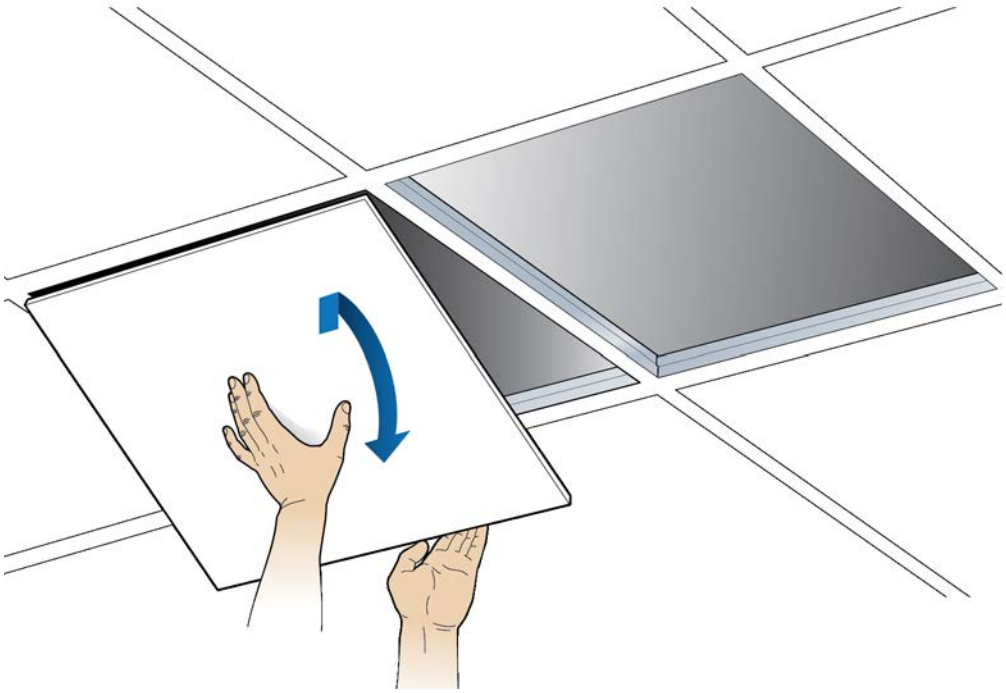

2. Place the RP plate on the tile and mark the four holes on the tile.
3. Cut the opening according to the dimensions in the following drawing.

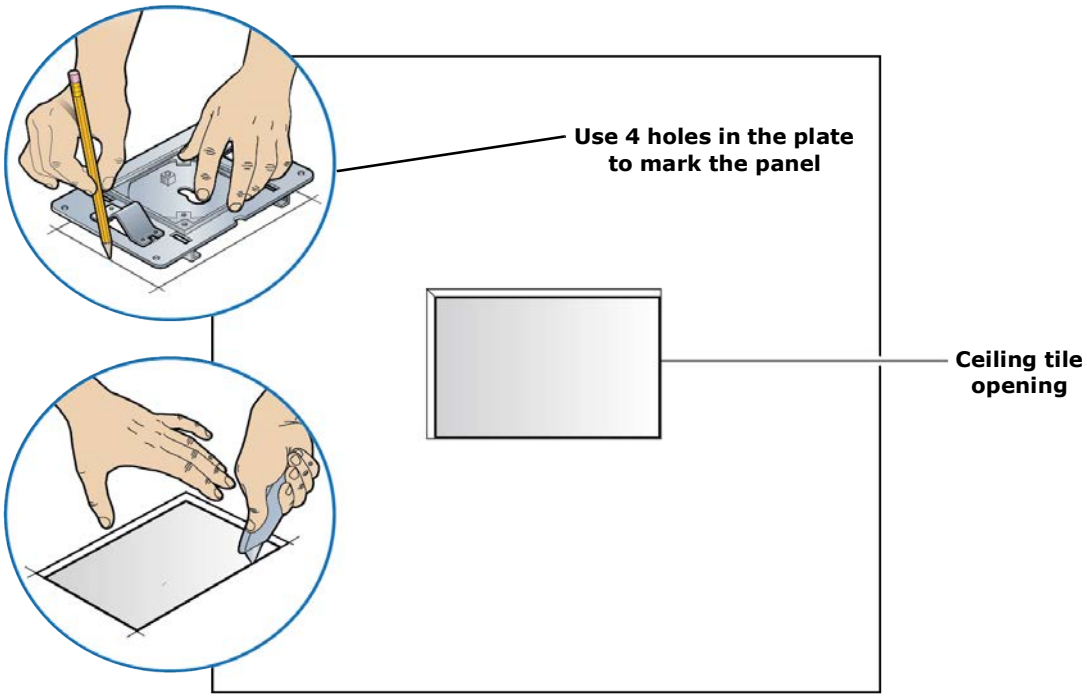

4 Attach the octagon box to the ceiling bracket using a clamp and screw.

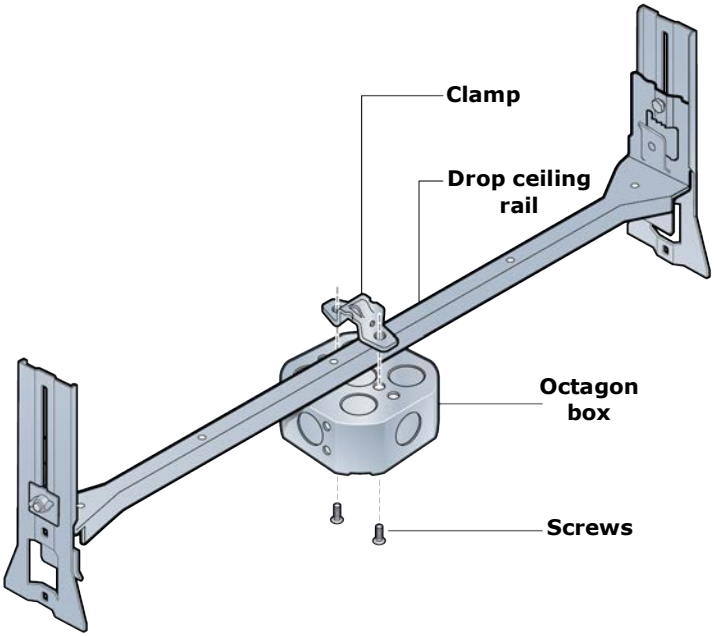

5 Replace the ceiling tile with the cutout.

6 Install the drop rail/octagon box assembly over the modified tile.

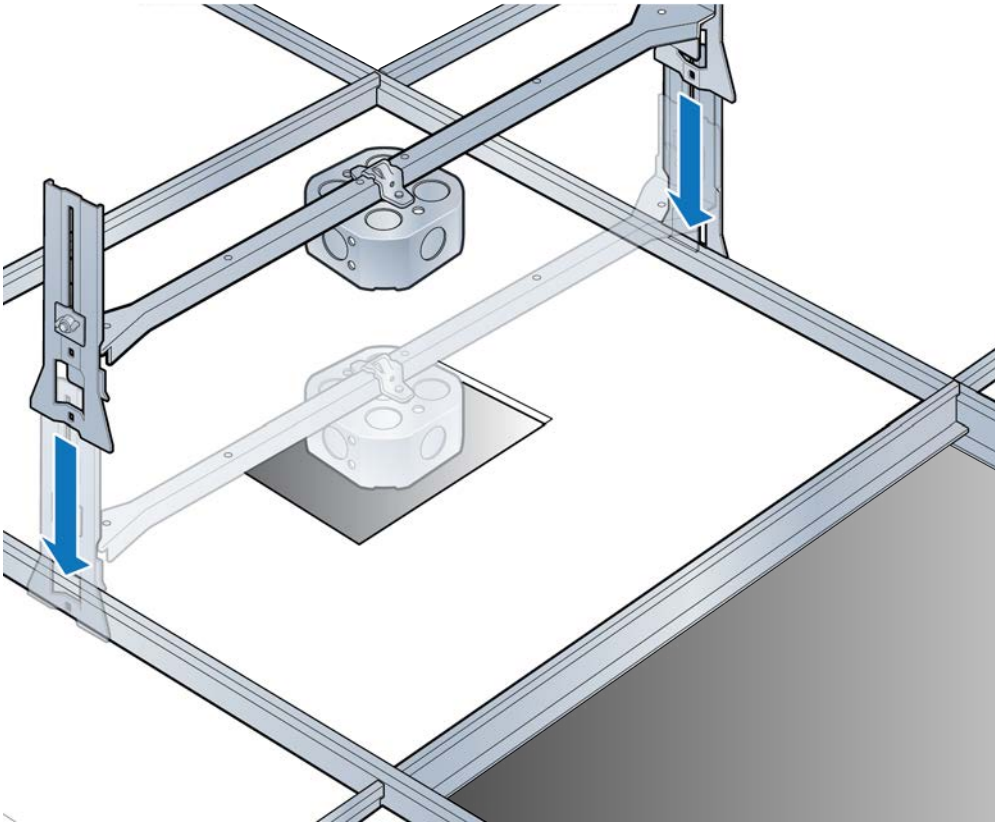

7 Attach the mounting plate onto the octagon box on the RP side of the tile.

8 Connect the red and blue cable on the octagon mounting plate as shown.

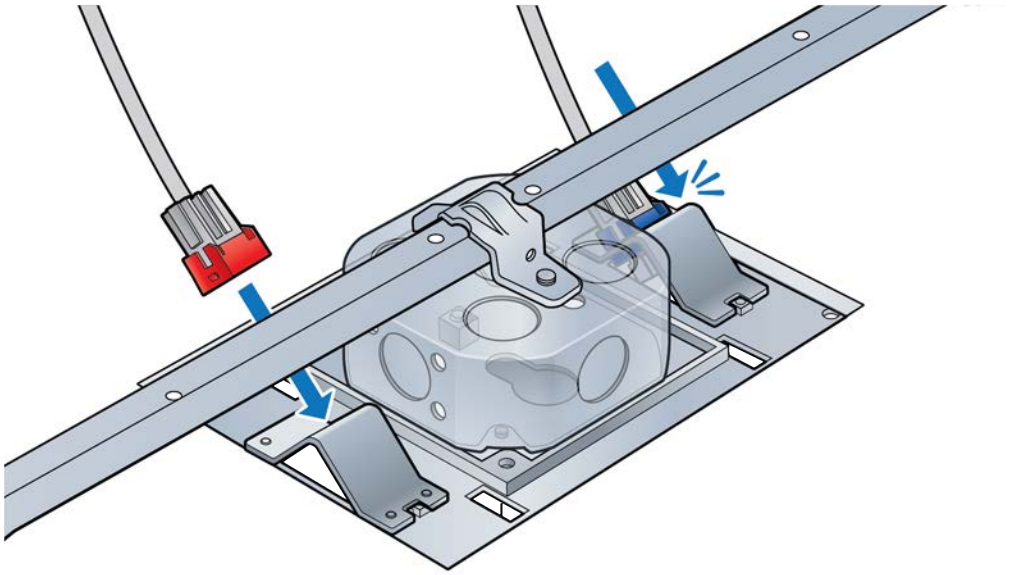

9 Attach base plate to the Radio Point.

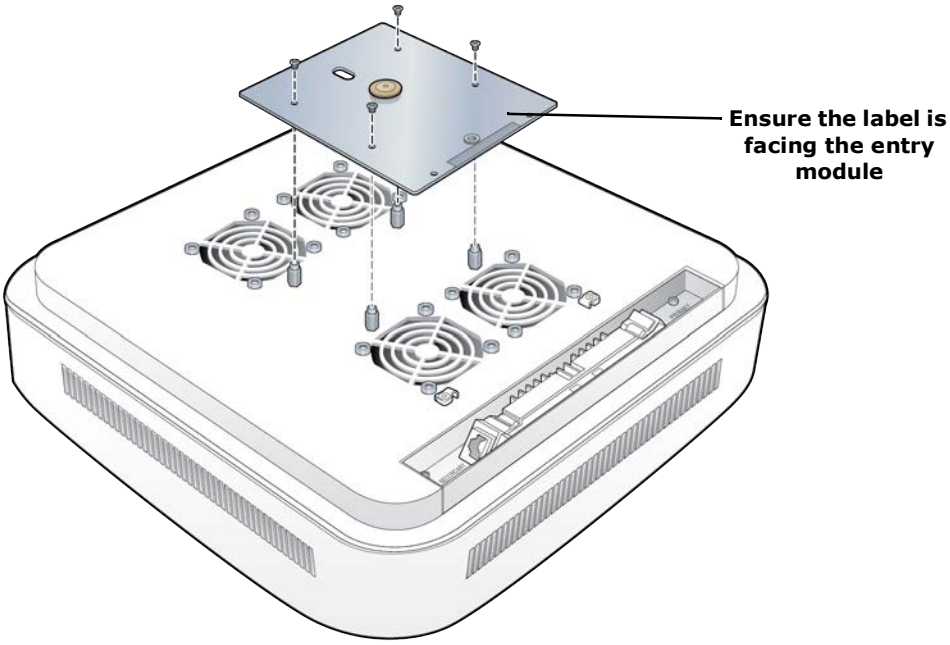

10 Connect the red and blue Ethernet cables to the RP as shown below.

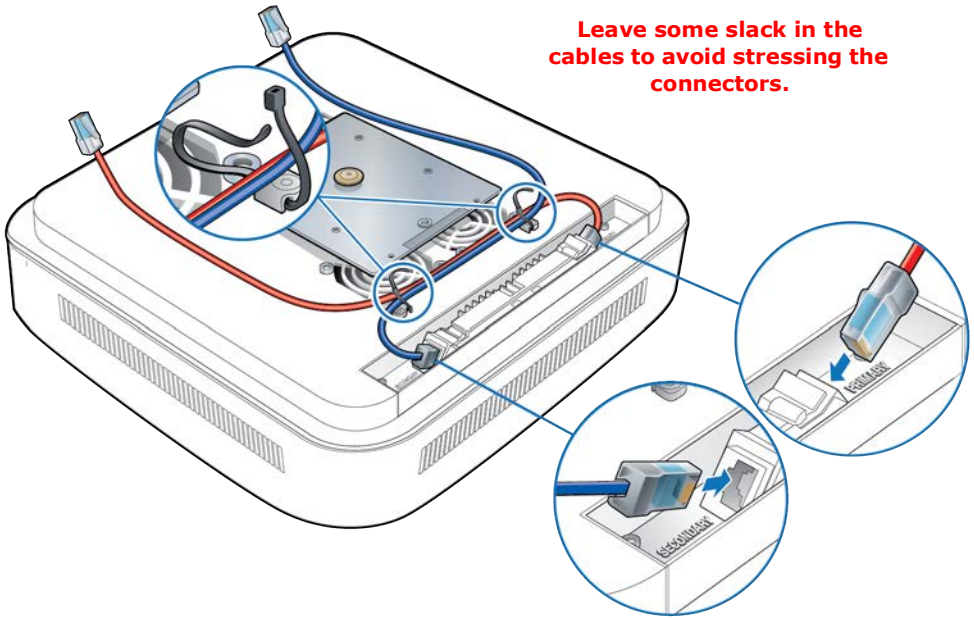

11 Connect the blue and red Ethernet cables from the RP to the connectors on the ceiling plate.

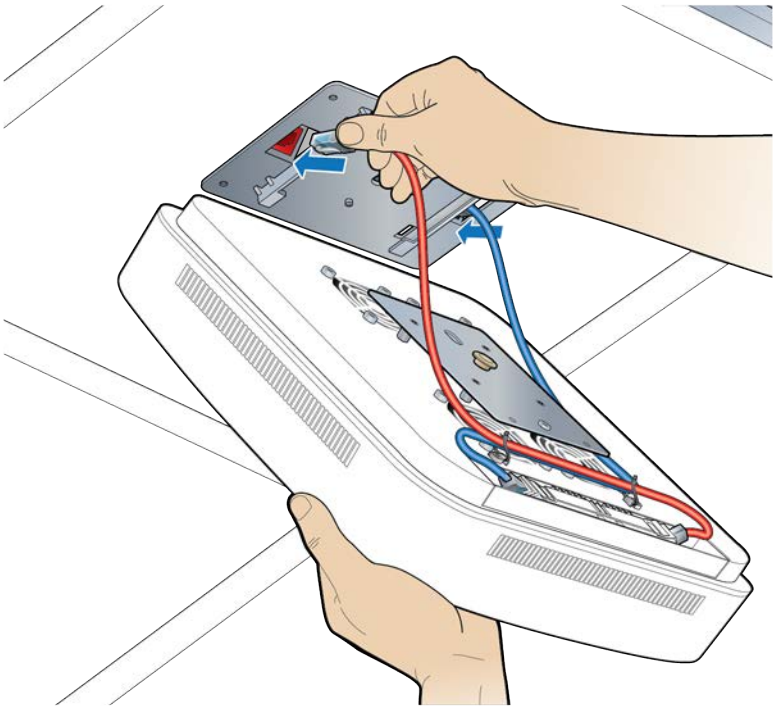

12 Attach the RP to the octagon plate.

- **a** Align the keyhole opening on the octagon mounting plate with the button on the RP mounting plate.
- **b** Insert the RP into the octagon box mounting plate slot and slide until the RP plate meets the tabs on the octagon box plate.
- **c** Lift the RP vertically and slide it into the locked position.

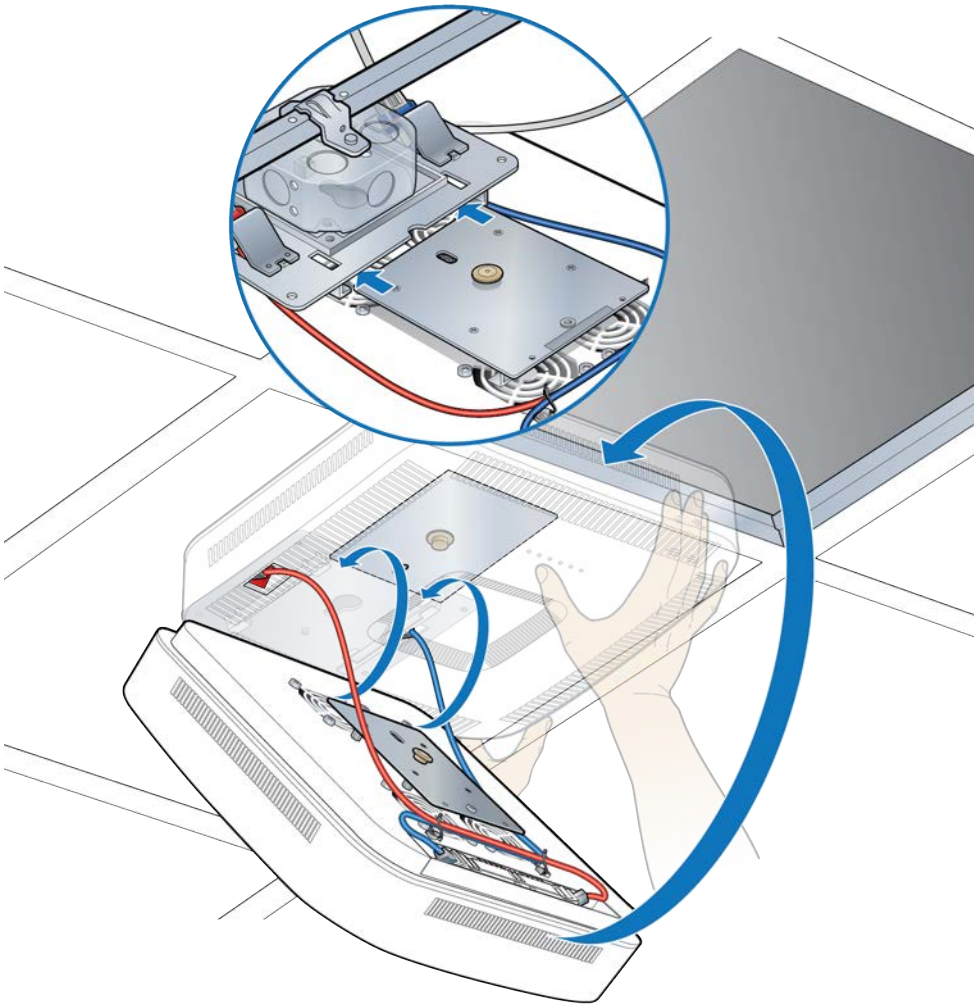

13 Replace the ceiling tile next to the Radio Point.

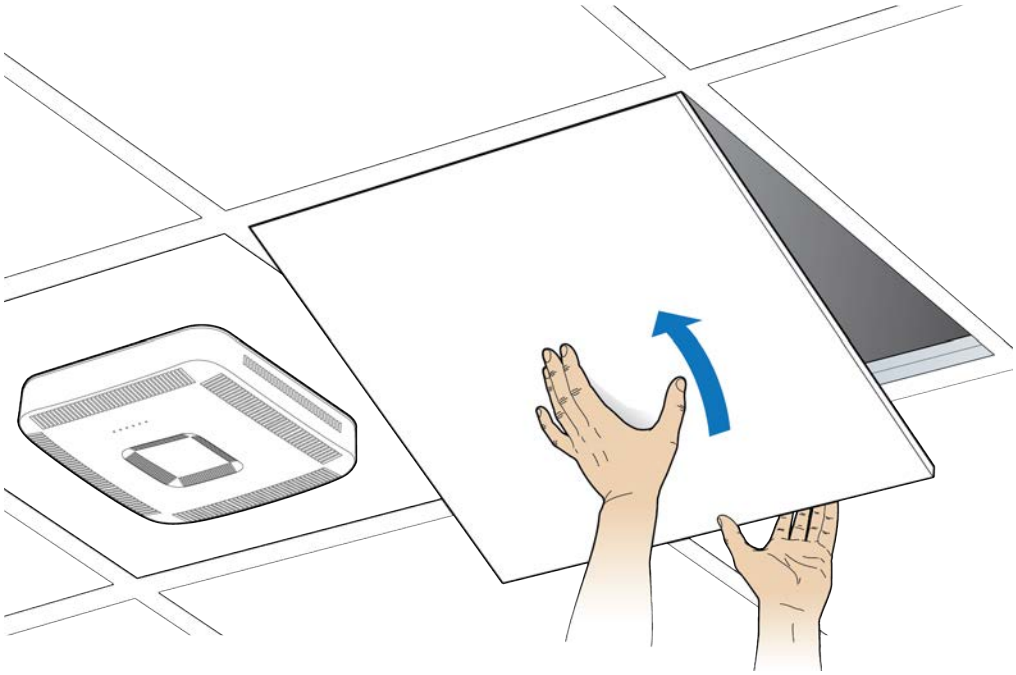

Appendix A

Safety

This appendix contains specifications for CommScope ONECELL, including FCC information and technical data.

Radiation Exposure Statement	A-2
Human exposure limits for ONECELL deployments	A-2
FCC ID	A-5

Radiation Exposure Statement

Important: Changes or modifications not expressly approved by CommScope LLC could void your authority to operate the equipment.

FCC Part 15

The Baseband Controller RP5200 have been tested and found to comply with the limits for Class A equipment, pursuant to Part 15 of the FCC Rules.

NOTE

This equipment has been tested and found to comply with the limits for a Class A digital device, pursuant to part 15 of the FCC Rules. These limits are designed to provide reasonable protection against harmful interference when the equipment is operated in a commercial environment. This equipment generates, uses, and can radiate radio frequency energy and, if not installed and used in accordance with the instruction manual, may cause harmful interference to radio communications. Operation of this equipment in a residential area is likely to cause harmful interference in which case the user will be required to correct the interference at his own expense.

For more information, see the publication femtocells and Health at http:// www.femtoforum.org or visit the FCC website at www.fcc.gov.

EN55032

WARNING

This equipment is compliant with Class A of EN55032. In a residential environment, this equipment may cause radio interference.

Human exposure limits for ONECELL deployments

The human exposure limits for the ONECELL product is calculated by using the Maximum Permissible Exposure (MPE) method associated with fixed-type transmitter devices at a minimum exposure distance of 20 cm.

WARNING

This equipment is not suitable for use in locations where children are likely to be present.

Table A-1 includes values for one RP5200 Radio Point and four Radio Points per chassis.

Table A-1. RF exposure for ONECELL at maximum power internal antennas for RP5200

Parameter	RPM-A5A11-B66	RPM-A5A11-B02	RPM-I5A11-B01	RPM-I5A11-B03	RPM-I5A11-B07
Tx Power (dBm) per antenna	24.13	24.23	24.25	24.00	24.70
Tx Loss (dB)	0	0	0	0	0
Tx Antenna Gain (dBi)	4	4	4	4	4
Transmitter Duty Cycle %	100	100	100	100	100
Number of Antennas (MIMO)	2	2	2	2	2
Contribution due to multiple antennas (dB)	3.0103	3.0103	3.0103	3.0103	3.0103
Derived Total EIRP (dBW)	1.140	1.240	1.260	1.010	1.710
Bands	66	2	1	3	7
Frequency Range (MHz)	2110-2200	1930-1990	2110-2170	1805-1880	2620-2690
Point Source Total EIRP (watts)	1.300	1.331	1.337	1.262	1.483
Power Density (W/m2) @ 20 cm	2.587	2.647	2.569	2.510	2.950

1. For persons with implants, the maximum calculated distance of 30cm. This applies to any combination of up to four radio modules in Bands 1,3 and 7.
2. For general public and workers, a measured distance of 5mm was determined. This applies to any combination of up to four radio modules in Bands 1,3 and 7.

For general public and workers, a calculated distance of 20cm was determined. This applies to any combination of up to four radio modules in Bands 2 and 66.

Parameter	RPM-I5A11-B17	RPM-A5A11-B12	RPM-A5A11-B14	RPM-A5A11-B05	RPM-A5A11-B30
Tx Power (dBm) per antenna	21.70	21.88	21.45	21.58	20.99
Tx Loss (dB)	0	0	0	0	0
Tx Antenna Gain (dBi)	4	4	4	2	5

Parameter	RPM-I5A11-B17	RPM-A5A11-B12	RPM-A5A11-B14	RPM-A5A11-B05	RPM-A5A11-B30
Transmitter Duty Cycle %	100	100	100	100	100
Number of Antennas (MIMO)	2	2	2	2	2
Contribution due to multiple antennas (dB)	3.0103	3.0103	3.0103	3.0103	3.0103
Derived Total EIRP (dBW)	-1.290	-1.110	-1.540	-3.410	-1.000
Bands	17	12	14	5	30
Frequency Range (MHz)	734-746	729 - 746	758 - 768	869-894	2350-2360
Point Source Total EIRP (watts)	0.743	0.775	0.702	0.456	0.794
Power Density (W/m2) @ 20 cm	1.478	1.541	1.396	0.907	1.58

Reference documents

[1] Federal Communications Commission Document OET Bulletin 65, Supplement C, 2001, Evaluating Compliance with FCC guidelines for Human Exposure to radio frequency Electromagnetic Fields, US Federal Communications Commission, Office of Engineering and Technology June 2001.

[2] Federal Communications Commission Document OET Bulletin 56, “Questions and answers about biological effects and potential hazards of radio frequency electromagnetic fields”, Federal Communications Commission Office of Engineering and Technology, August 1999.

[3] ICNIRP Guidelines for limiting exposure to time varying electric, magnetic and electromagnetic fields up to 300 GHz. International Commission on Non Ionizing Radiation, published in Health Physics 74 (4): 494-522; 1998

[4] ICNIRP Statement on EMF-Emitting New Technologies, International Commission on Non-Ionizing Radiation, published in Health Physics 94 (4):376-392, 2008

[5] 3GPP Document 3GPP TS 36.104 version 10.11.0 Release 10,” LTE Evolved Universal Terrestrial Radio Access (E-UTRA); Base Station (BS) radio transmission and reception”

FCC ID

The FCC ID is available on the information labels attached to the RP.

RP5200

For the RP5200, the FCC ID for each of the installed radio modules is visible when the cover is removed. The drawing below shows the label on the radio module.

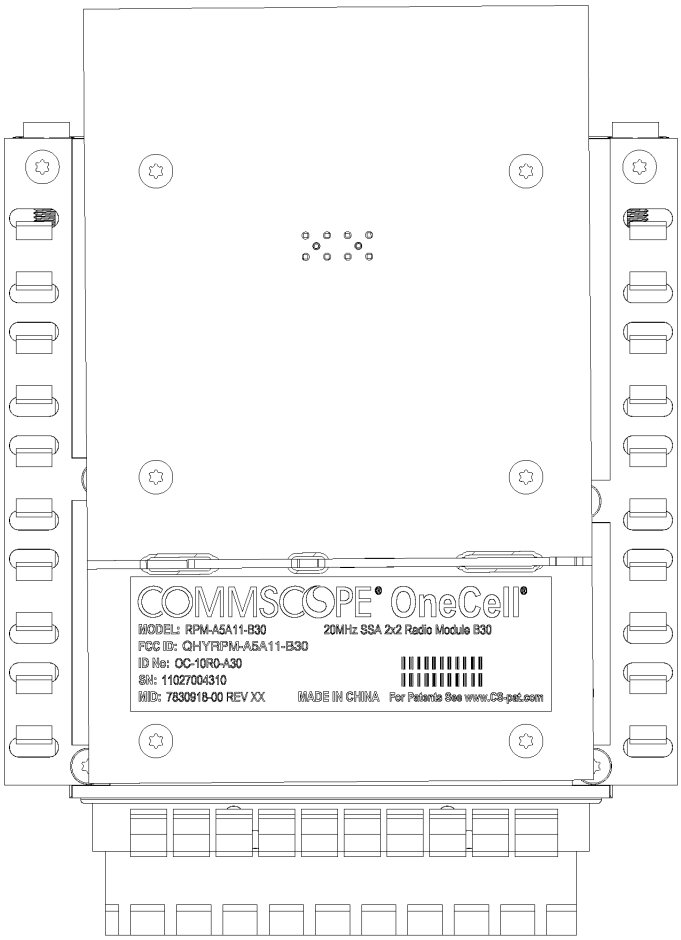

Appendix B

Installation troubleshooting

This section contains information on troubleshooting the ONECELL installation. It includes the LED patterns for the Baseband Controller and Radio points.

Radio Point RP5200 LED patterns	B-2

Radio Point RP5200 LED patterns

The Radio Point RP5200 supports six LEDs on the front cover.

Indicators are for

- four radios (one for each)
- ETH 1 – MR PORT:POE++, POE+, Ethernet link
- ETH 2– SR PORT:POE++, POE+, Ethernet link

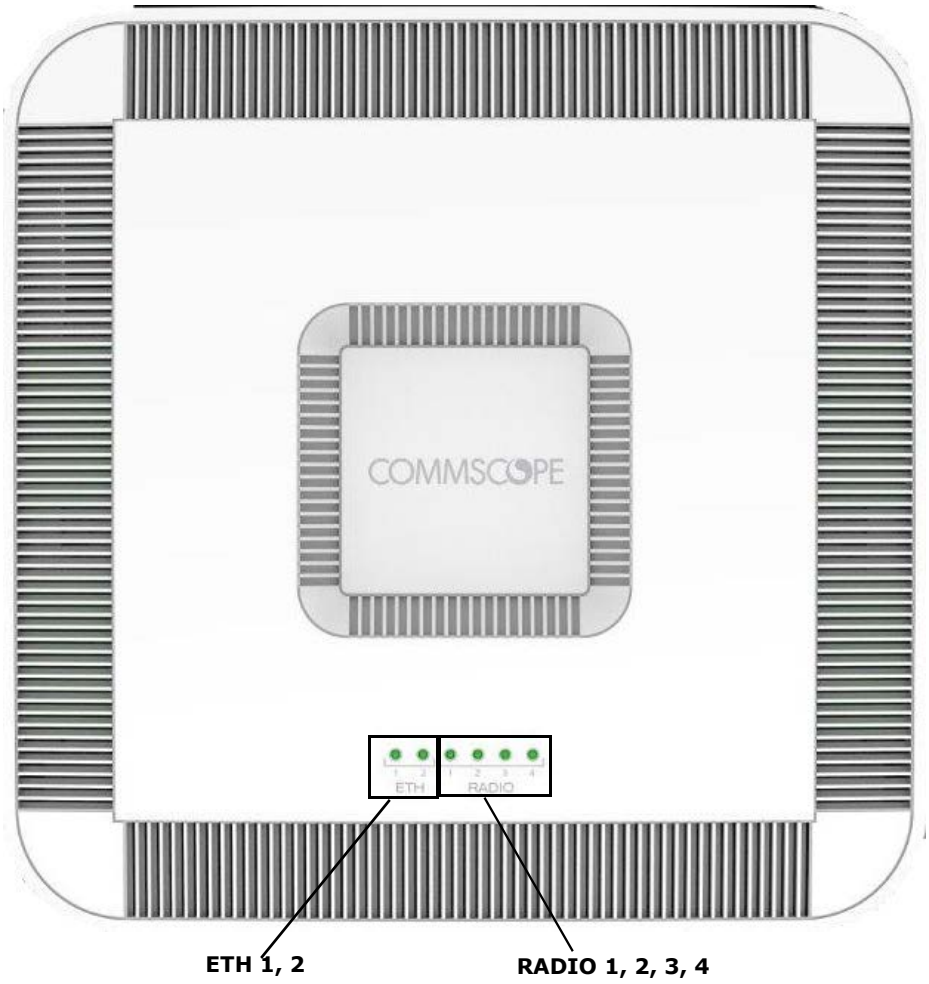

The following table shows:

- Display pattern for each LED
- What the pattern indicates

- Action to take, if any, to resolve the issue

LED	Display Pattern	Indicates	Action to Take
RADIO 1 RADIO 2 RADIO 3 RADIO 4	Green, solid	Power On, transmitting	None
	Amber, solid	• RFTxState OFF • No Controller Assigned • No Timing	• Check 1588 VLAN configuration • Verify that the Radio Point is in STANDBY because more than 32 RPs are connected
	Red, solid	• No connection to Controller • HW error • Low Power	Hardware error – replace Radio Point
	Green, blinking	Firmware upgrade	None
	Amber, blinking	RF module Self-Test Failure	Replace Radio Module
Eth 1	Green, solid	Power On, PoE++ power	None
	Amber, solid	Link up, no power	Check that the Ethernet cable is connected to the Radio Point
	Amber, blinking	Platform Self-Test Failure	Replace Radio Point
	Red, solid	Ethernet port error	• Connect the Ethernet cable between the Baseband Controller and Radio Point • Replace Radio Point
Eth 2	Green, solid	Power On, PoE++ power	None
	Amber, solid	Link up, no power	Check that the Ethernet cable is connected to the Radio Point
	Amber, blinking	Platform Self-Test Failure	Replace Radio Point
	Red, solid	Ethernet port error	• Connect the Ethernet cable between the Baseband Controller and Radio Point • Replace Radio Point
* **Note**: When all of the LEDs are solid red, there is an RP hardware failure.			

Appendix C

Specifications

This appendix contains specifications for CommScope ONECELL, including FCC information and technical data.

Environmental and physical specifications	C-1
SPF/SPF+ specifications	C-2

Environmental and physical specifications

The following table lists the electrical ratings and technical data for the RP5200.

Table C-1. Environmental and Physical specifications

Specification Type	Specification Values
Environmental	Operating Temperatures: 0 to 50°C (Plenum rated: UL-2043) Operating Humidity 10%-95% Non-Condensing Operating temperatures: 0°C to 50°C Active Cooling/Fans, acoustic noise: 39.5 dBA at 25C
Power Requirements	IEEE802.3bt-type 4 PoE++
Power Consumption	Up to: 72W (26W + 11.5W per RM)
Dimensions	13.54" W x13.54 H x 3.35" D (344.0 mm W x 344.0 mm H x 85.0 mm D)
Weight	8.82 lbs (4 kg)

SPF/SPF+ specifications

The following table lists the SPF and SPF+ specifications required for the Baseband Controller.

1G SFP LC SX Transceiver; 220M to 1K M
1G SFP LC LX transceiver, 550M 10K M
10G SFP+ LC SR Transceiver; Multi mode 26M to 300M
SFP-10G-LR Transceiver; Single mode 10KM
10G Direct attach SFP+ cable; Twin ax Cable; 7M (must be compatible with HP & Cisco switches

Appendix D

Field Replaceable Units

This appendix contains instructions for replacing Baseband Controller modules and Radio Points in the ONECELL system.

FRU overview	D-2
Replacing RP5200i radio point	D-2
Replacing RP5200i radio modules	D-7

FRU overview

Field Replaceable Units (FRUs) are modules that can be replaced on-site in case of equipment failure. On-site and off-site activities are required when replacing modules. The off-site activities are achieved by using DMS.

This appendix contains details for replacing Radio Modules.

Replacing RP5200i radio point

The following procedures provide instructions for replacing a ONECELL RP5200i radio point.

WARNING

Disconnect the Ethernet cable(s) on the RP to remove the power. Failure to do so will cause damage to the RP.

1. Remove the ceiling that is adjacent to the RP.
2. Remove the RP from the ceiling. Slide the RP in the direction of the LEDs.

   When the RP reaches the end of the key, tilt down to remove.

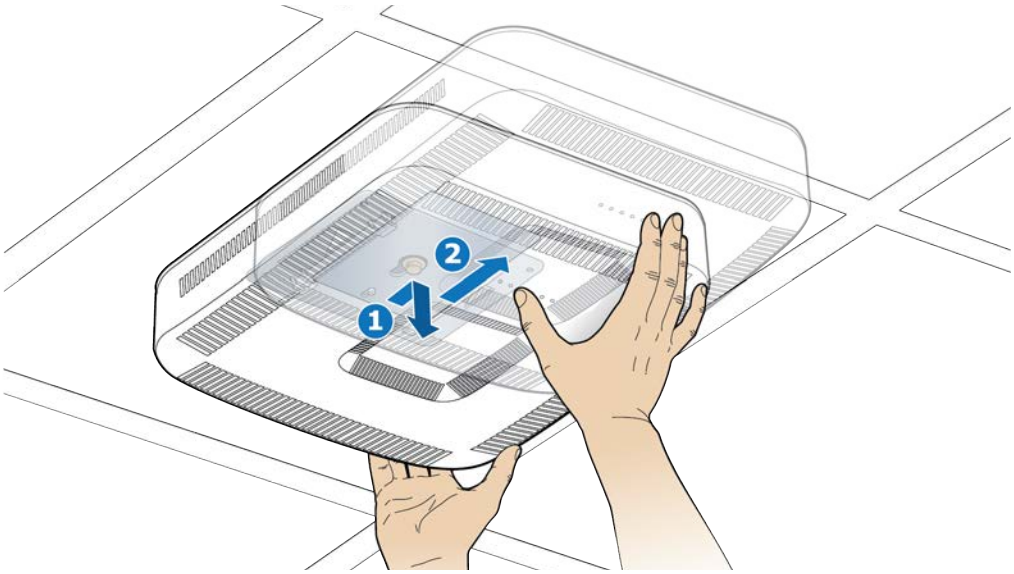

3. Disconnect the Ethernet cables on the RP.

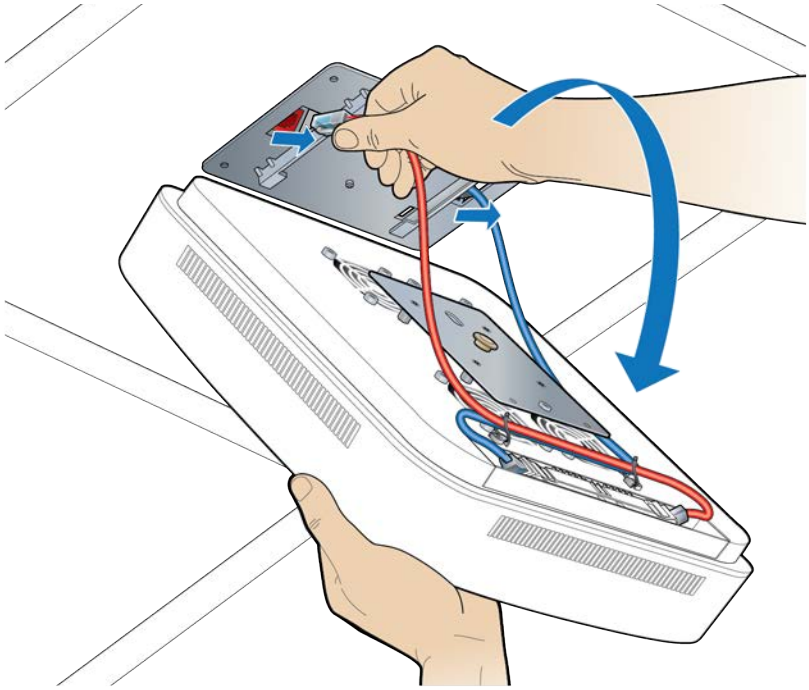

4 Remove the RP plate from the RP5200i. Set RP5200i aside.

5 Attach the RP plate to the replacement RP5200i.

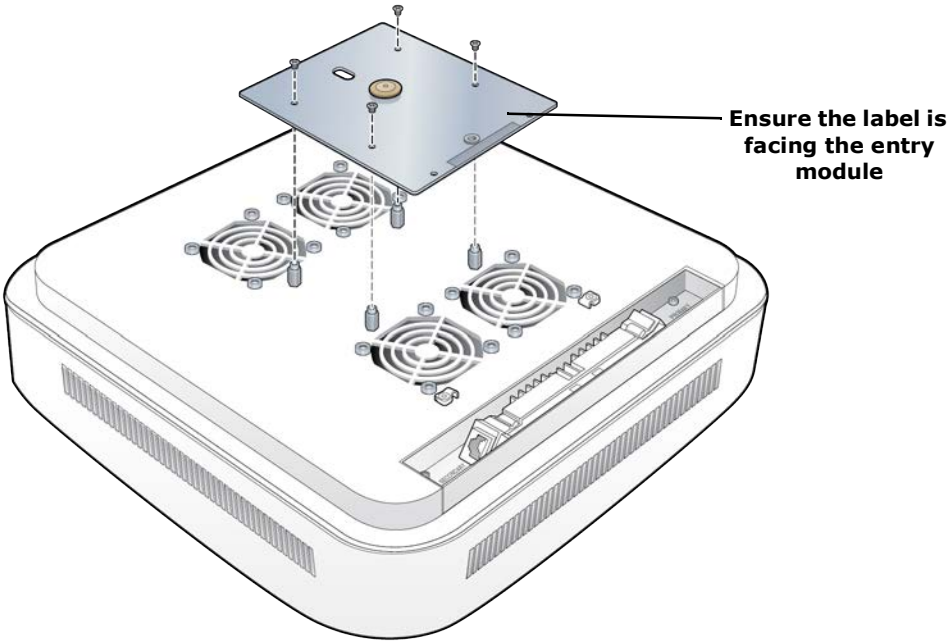

6 Connect the red and blue Ethernet cables to the RP as shown below.

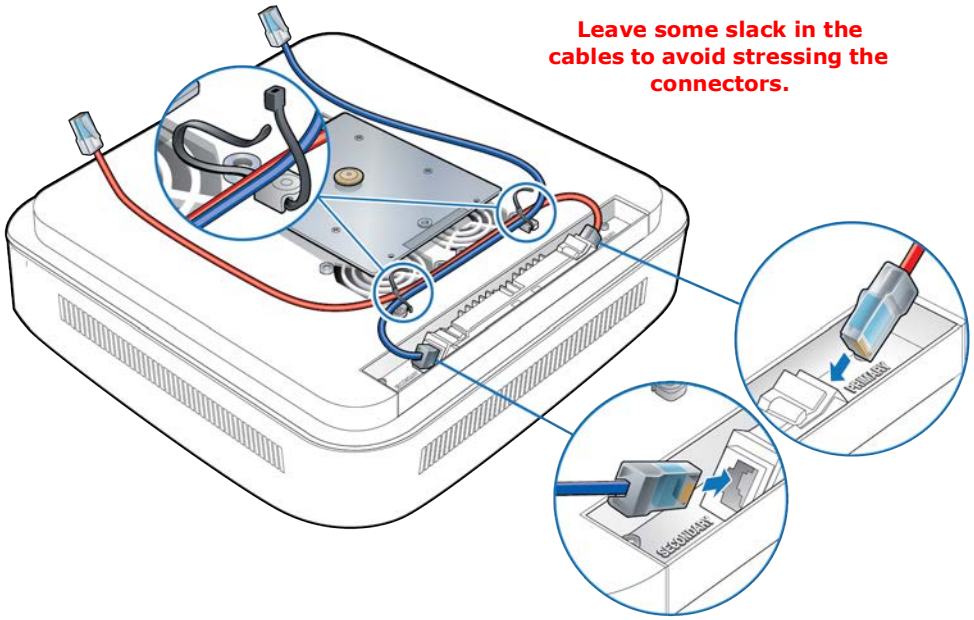

7 Connect the blue and red Ethernet cables from the RP to the connectors on the ceiling plate.

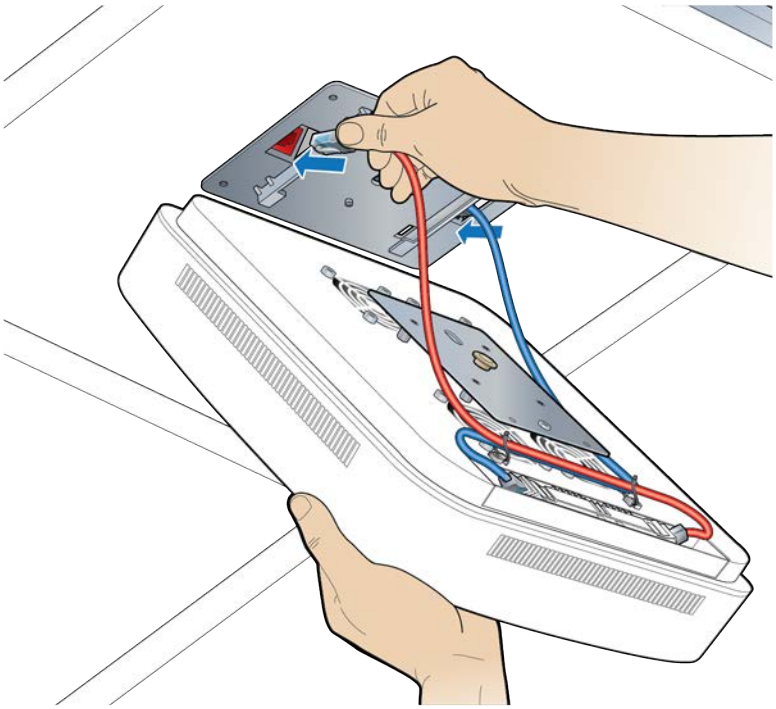

8 Attach the RP to the octagon plate.

- **a** Align the keyhole opening on the octagon mounting plate with the button on the RP mounting plate.
- **b** Insert the RP into the octagon box mounting plate slot and slide until the RP plate meets the tabs on the octagon box plate.
- **c** Lift the RP vertically and slide it into the locked position.

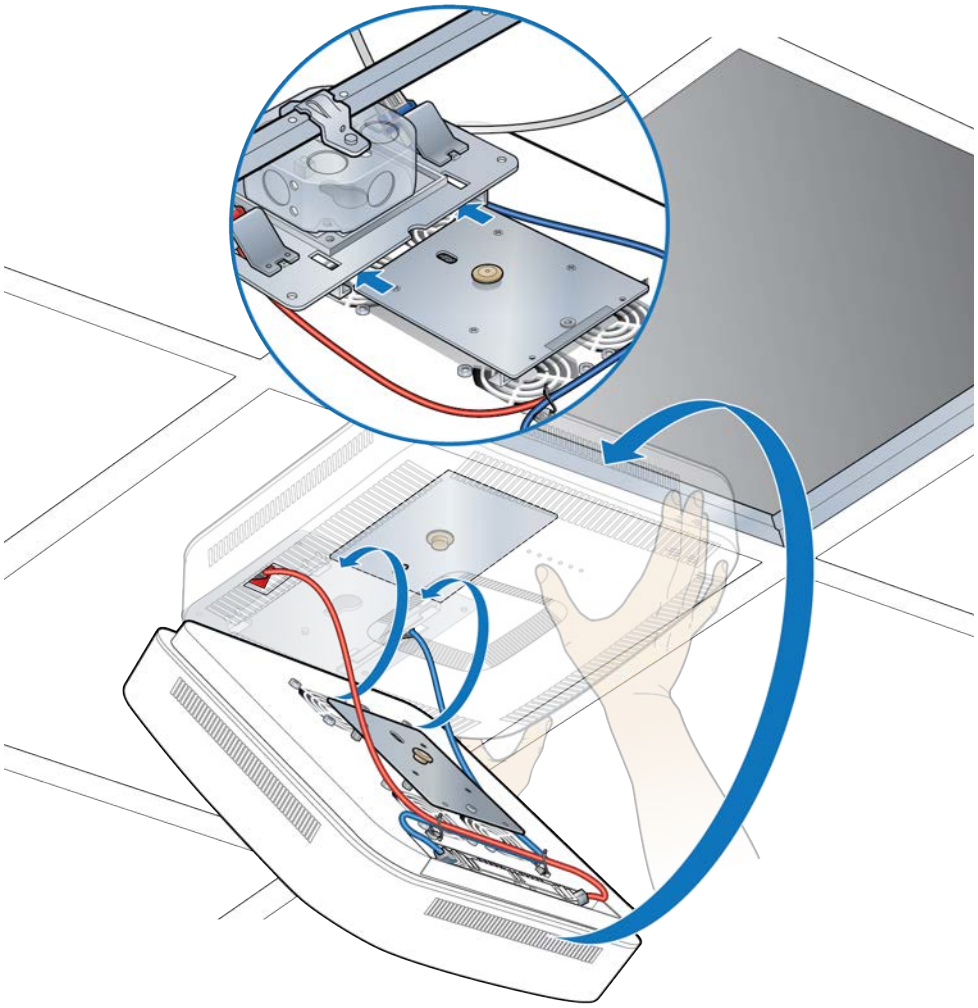

9 Replace the ceiling tile next to the Radio Point.

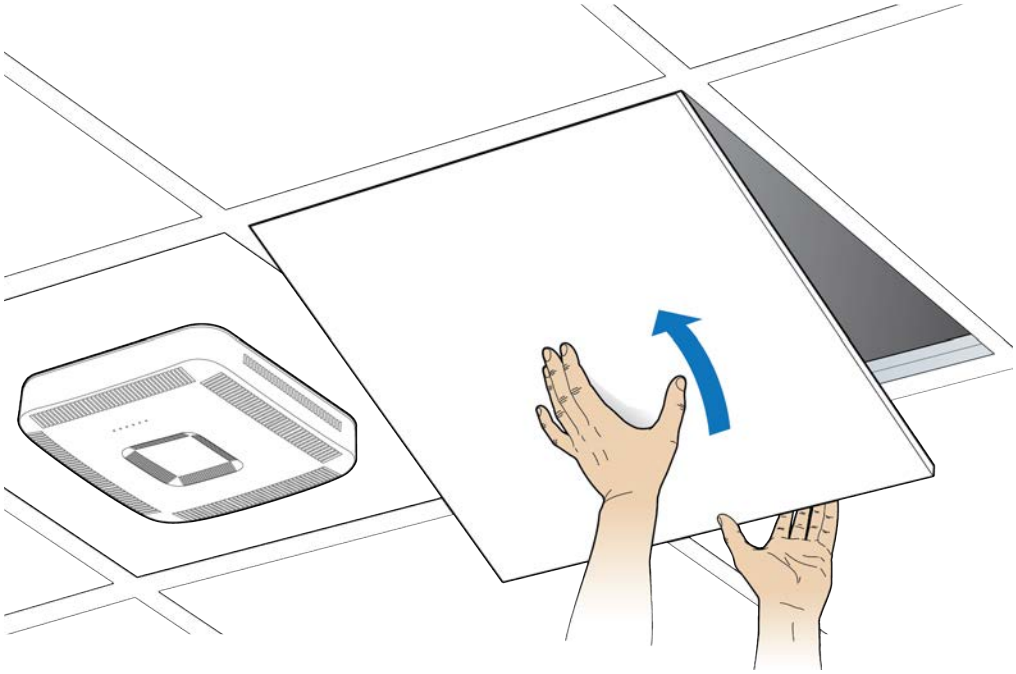

10 Verify the RP5200i installation. The operational state of the RP can be determined by the LED status on the RP. Additional information can be attained from the WebGUI status screens.

Replacing RP5200i radio modules

The following procedures provide instructions for replacing a ONECELL Radio Point radio module.

WARNING

Disconnect the Ethernet cable(s) on the RP to remove the power. Failure to do so will cause damage to the RP.

1 Remove the ceiling that is adjacent to the RP.

2 Remove the RP from the ceiling. Slide the RP in the direction of the LEDs.

When the RP reaches the end of the key, tilt down to remove.

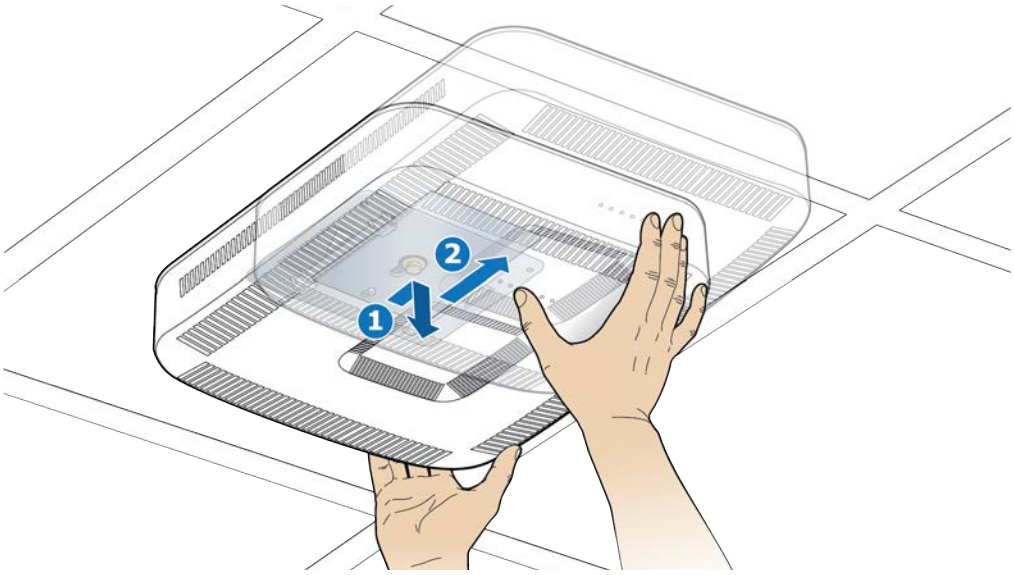

3 Disconnect the Ethernet cables on the RP.

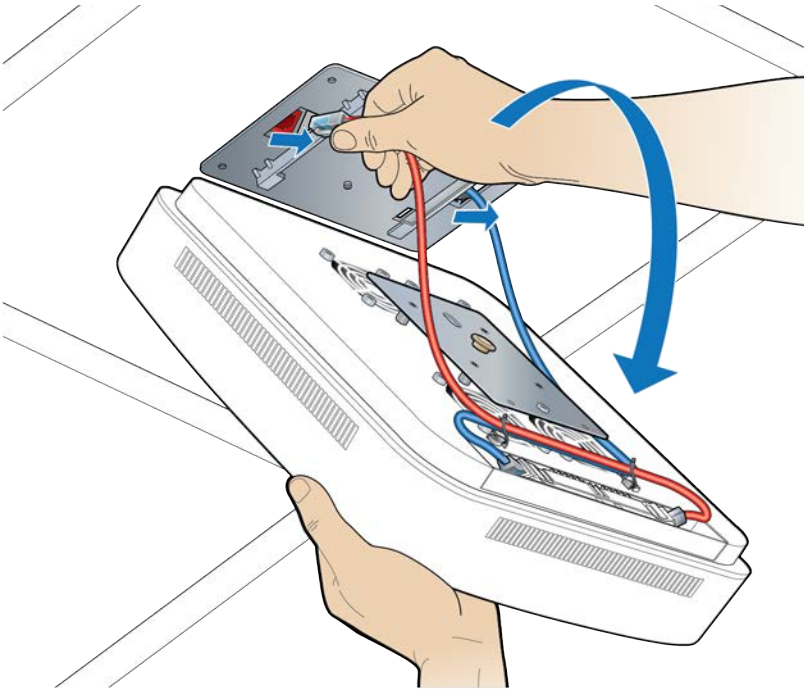

4 Remove the RP cover.

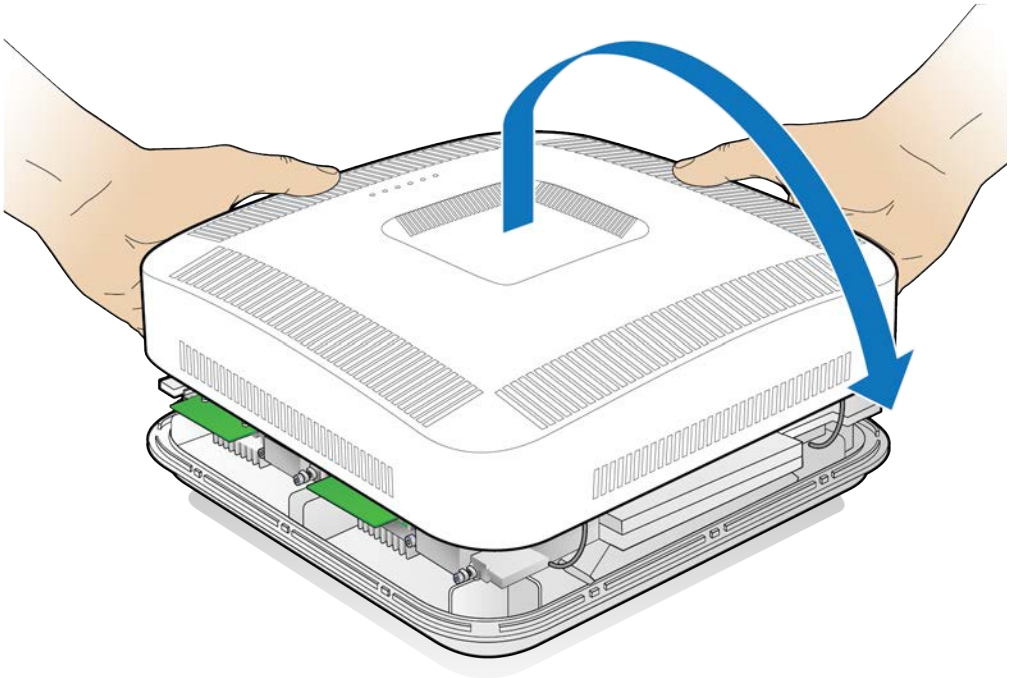

5 Using a Torx T10 screwdriver, loosen the screws on the Radio Module and remove it.

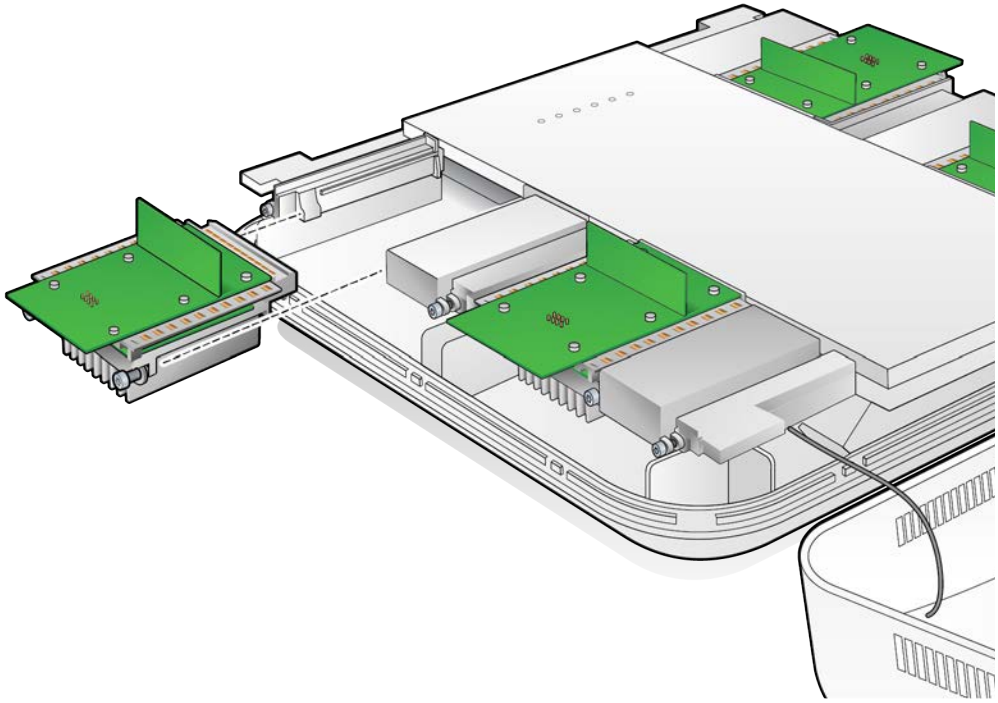

6 Insert the replacement RF module and tighten the screws.

7 Replace the RP cover.

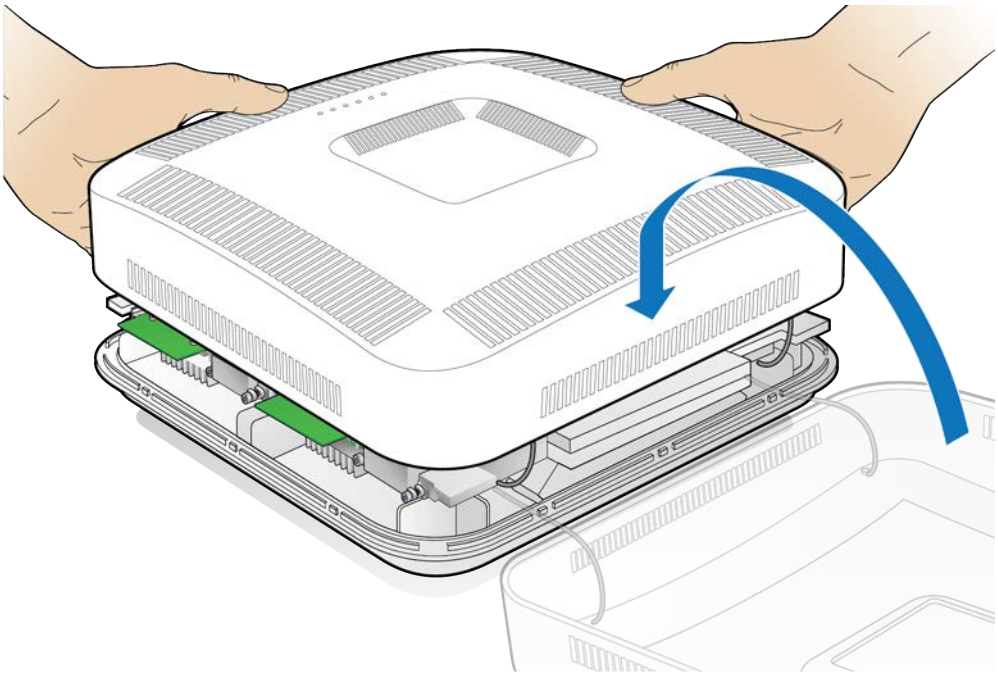

8 Connect the red and blue Ethernet jumpers into the ceiling plate.

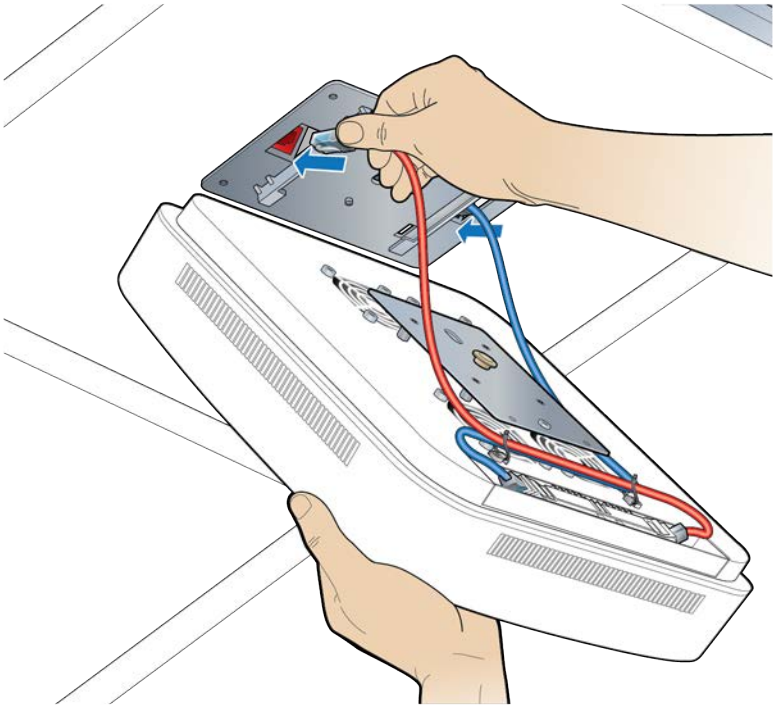

9 Attach the RP to the octagon plate.

- **a** Align the keyhole opening on the octagon mounting plate with the button on the RP mounting plate.
- **b** Insert the RP into the octagon box mounting plate slot and slide until the RP plate meets the tabs on the octagon box plate.
- **c** Lift the RP vertically and slide it into the locked position.

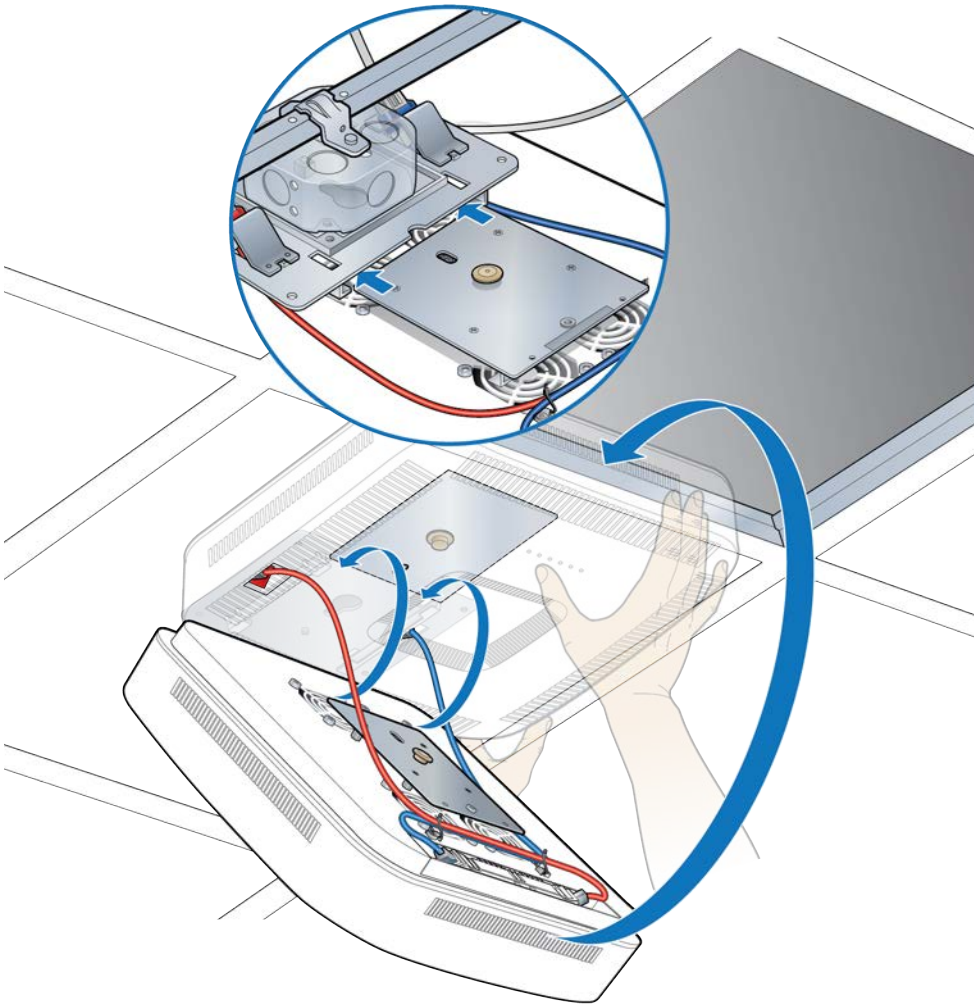

10 Replace the ceiling tile next to the Radio Point.

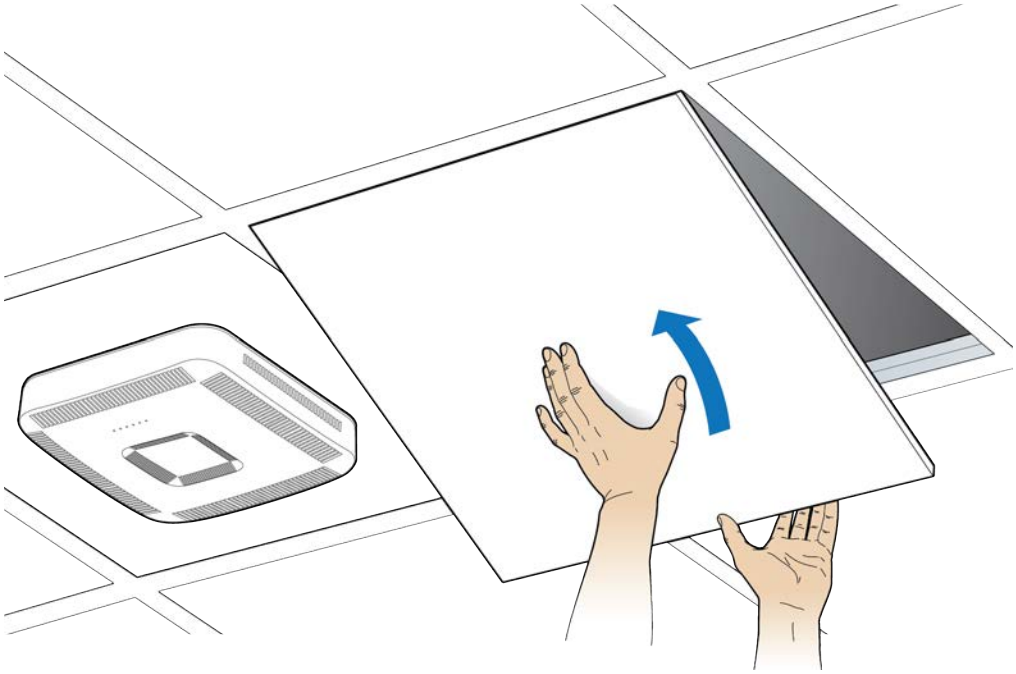

11 Verify the RF module installation. The operational state of the RF module can be determined by the LED status on the RP. Additional information can be attained from the WebGUI status screens.

Appendix E

Cable installation and power separation guidelines

This section contains best practices for installing Ethernet cables and connecting them to RPs.

Overview	E-2
Cable handling	E-2
Cable termination	E-3
Lightning protection	E-12
Ceiling connector	E-15
Patch panel	E-17
Power separation guidelines	E-17

Overview

When installing Rugged RPs, cables that can withstand temperature extremes and inclement weather should be used. In outside environments, avoid contamination or damage to plugs. Plugs must be protected from sunlight and water in a suitable equipment housing or NEMA 4 rated box. It is also important to avoid exposure to water at cut ends of unfilled cables and cords. The following information is available to help you extend the operation of your RP and switches.

Cable handling

Indoor/outdoor cords can be routed outdoors above ground and indoors, and can be ordered in lengths long enough for direct (home-run) installations from switch to end equipment. Cords have 20% Insertion Loss De-rating so only 85 meters total can be supported. Extended lengths can be cut in two for terminating the indoor ends at protectors or panels. Terminations are similar to typical 4-pair indoor cables.

Unreel long lengths of cable to ensure the cable does not become twisted or caught on objects.

Figure E-1. Unreel cable

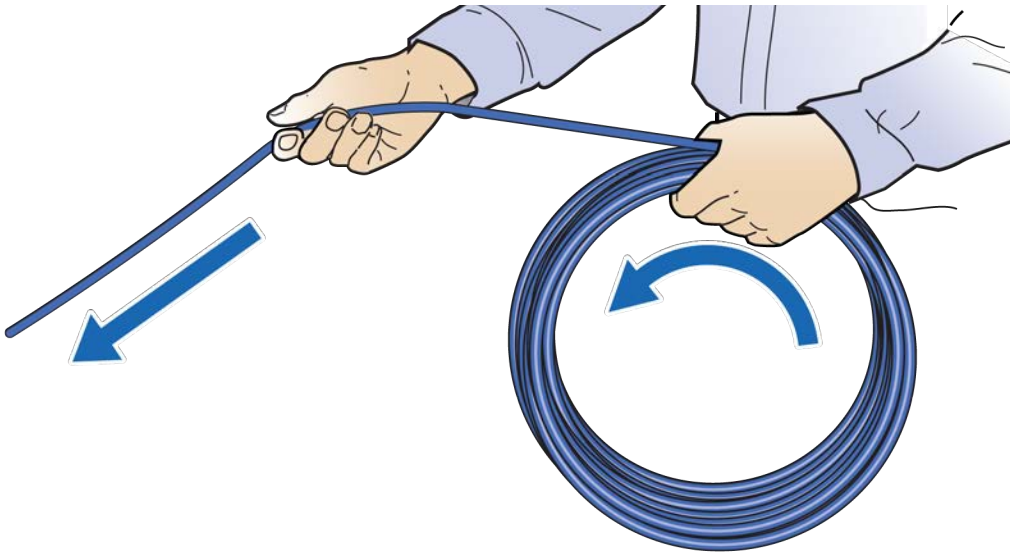

CommScope recommends using a sock fitted and secured over the plug to pull cable through long conduits.

Sock information

Tie wrap information

Figure E-2. Cable with sock attached using tie wrap

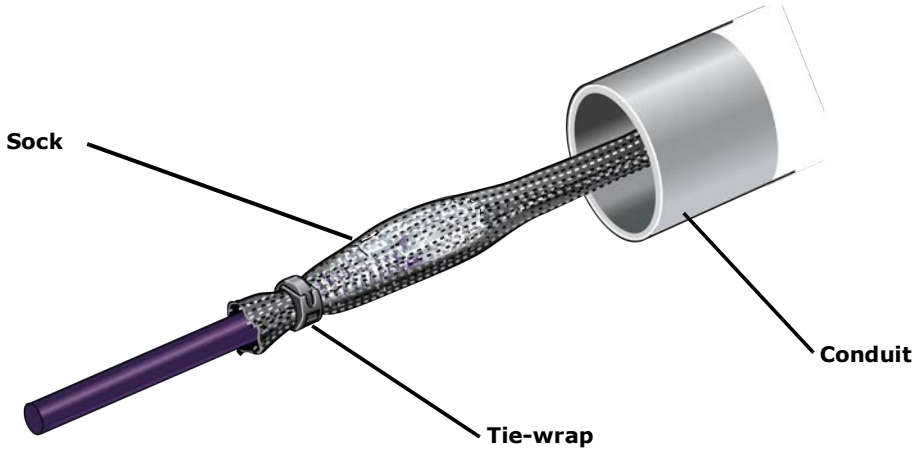

Feed the sock through the conduit and secure the sock on the terminal end of the cable with the tie-wrap. Once the sock and tie-wrap are in place, pull the cable through the conduit.

Cable termination

Before installing the Rugged RP, terminate the RP end of the Ethernet cable with the RJ45, IP67 connector provided in the box.

Figure E-3. RJ45, IP67 connector

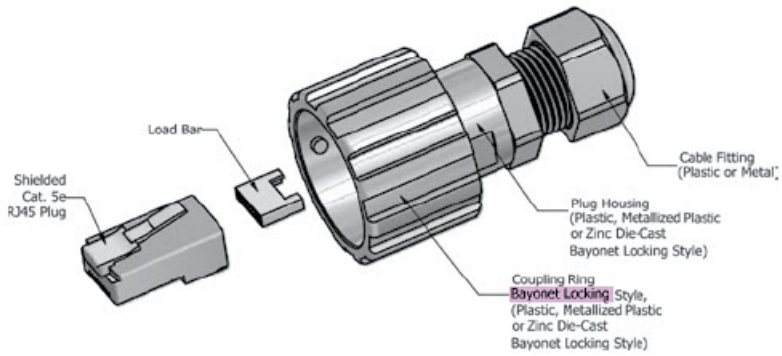

Flip the plug anti-snag to make it easier to push through the cord grips (flip it back before plugging in).

Use the split grommet provided. Once it is in place, coat it with silicone to ensure the connector is sealed.

Figure E-4. Assembling the connector on the RP end

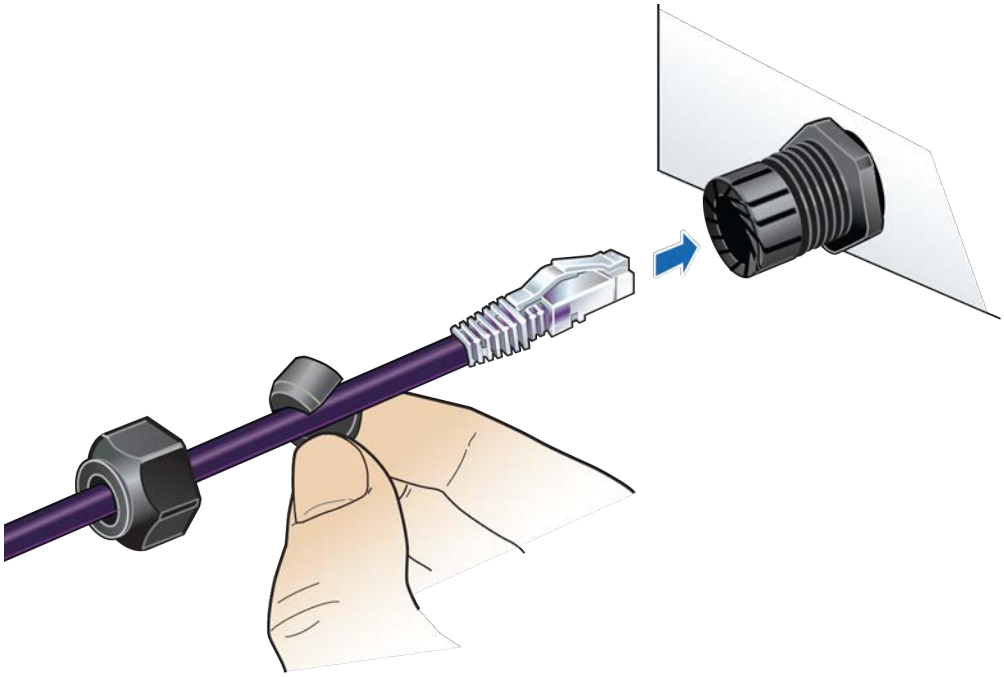

Cable splicing

Some cables are run in one piece from source to destination and have connector terminations. In other cases, two shorter pieces of cable need to be spliced together. When a cable is run to outdoor devices, you should take measures to ensure that cables are properly protected against moisture entering the cable. This is especially important when the jacket is stripped back from the wires.

Some cables are gel filled and the termination includes cleaning the excess gel and blocking the end with silicone sealant to prevent future leakage. A typical blocking method uses a 2 cm length of Alpha Wire PVC-105-2 tubing or equivalent.

1 Fill all space inside the tubing with B-sealant.

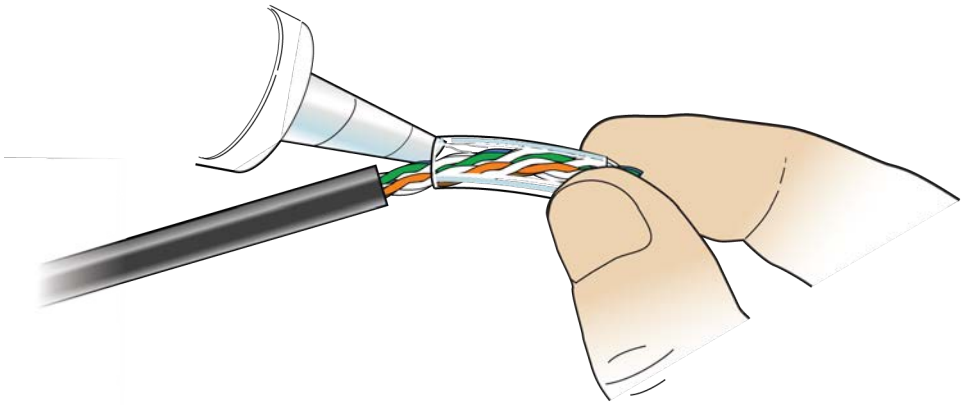

2 Position the filled tube to overlap the end of the inner jacket and seal the gel. Clean off all excess sealant.

NOTE: Tape can be used to stabilize the tube for immediate termination before the sealant sets.

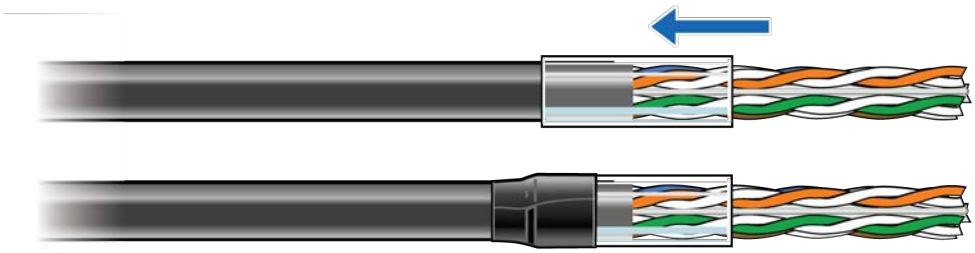

Cable termination

Shielded cables must be properly terminated, either grounded or isolated. For exposed installations requiring protection, the end of the shield can be bonded in various ways. The following procedure is an example of one method.

1 Make a slit along the length of the jacket. Be careful not to tear the underlying shielding.

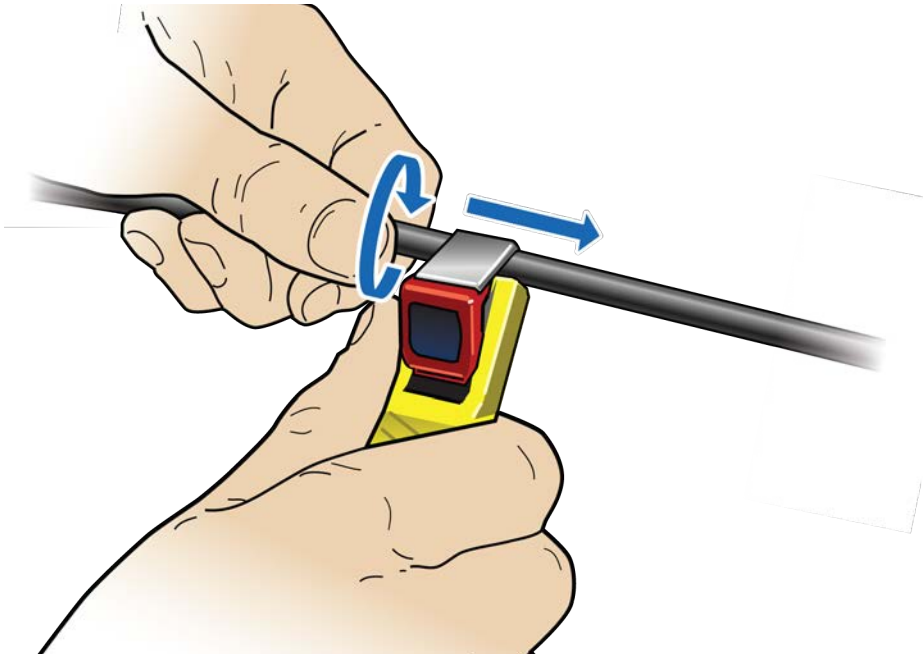

2 Pull back the jacket along the slit and remove.

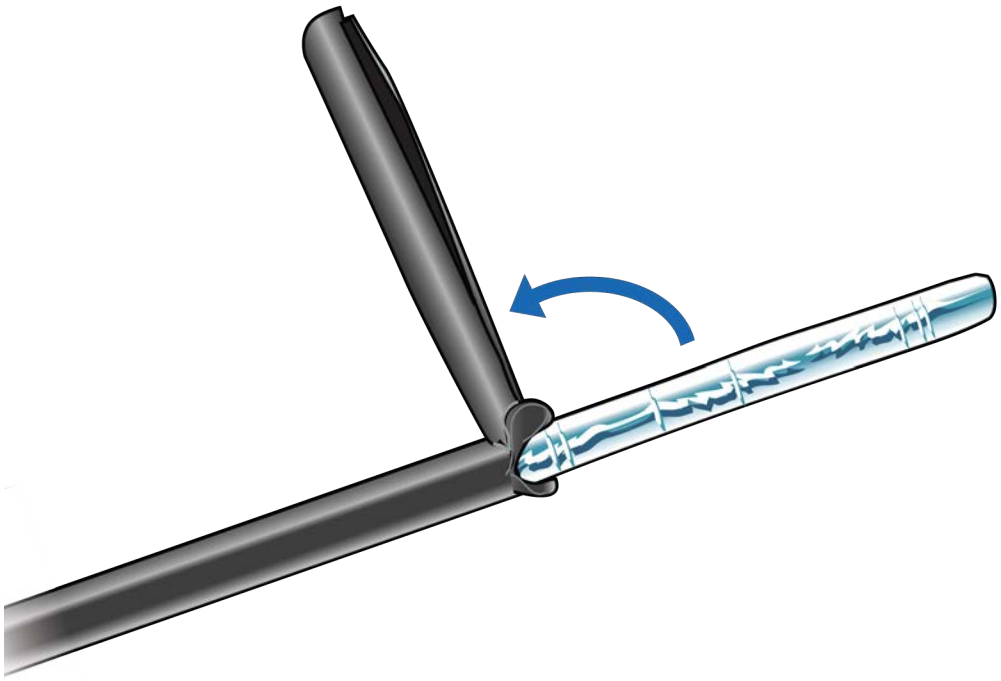

3 Fold back the foil shielding and drain wire to expose the inner jacket.

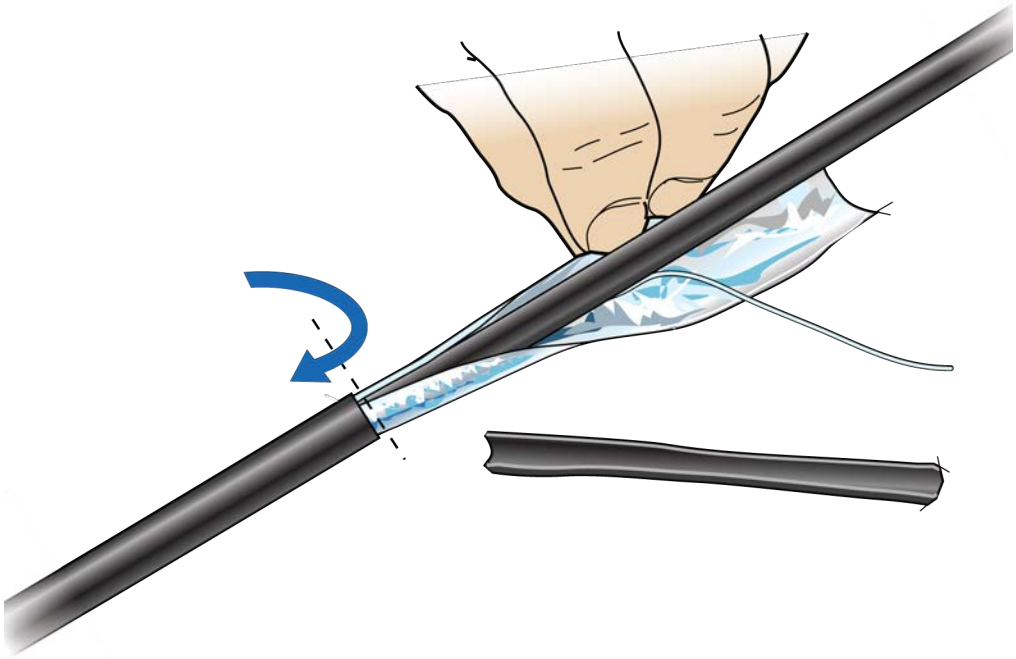

4 Prepare the inner jacket for blocking the gel and direct burial.

- **a** Cut back the inner jacket
- **b** Trim the flute
- **c** Clean the excess gel

NOTE: The flute can be cut longer to match the blocking tube length.

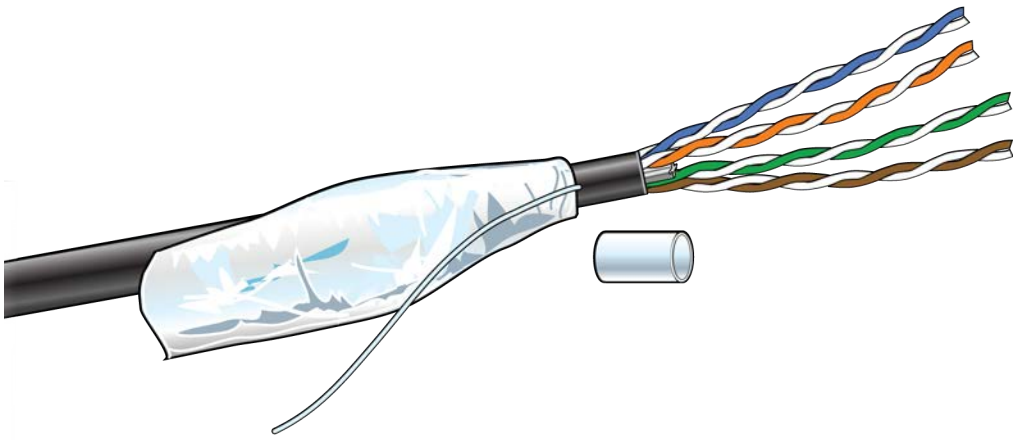

5 Fill all space inside the tubing with B-sealant and position the filled tube to overlap the end of the inner jacket and seal the gel.

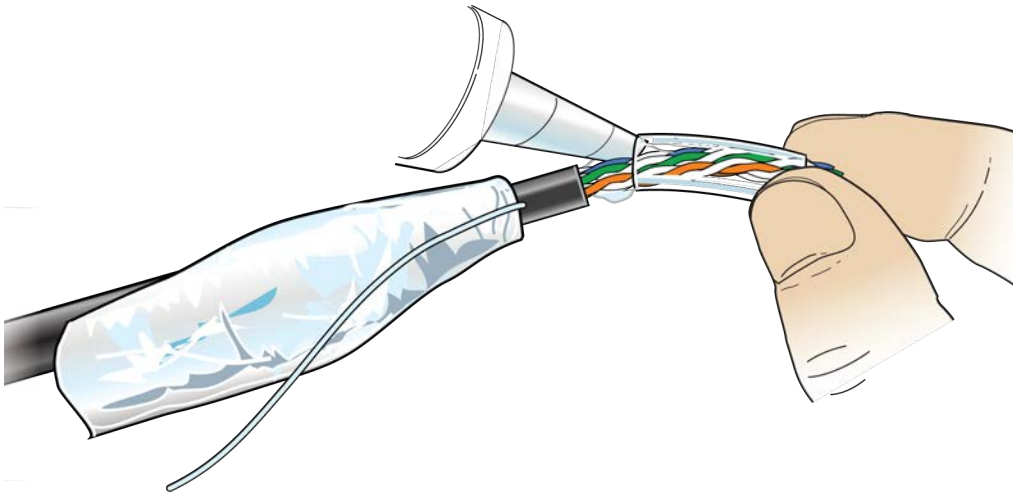

6 Fold the drain wire and foil back over the tube and position the foil to be folded back over the tube.

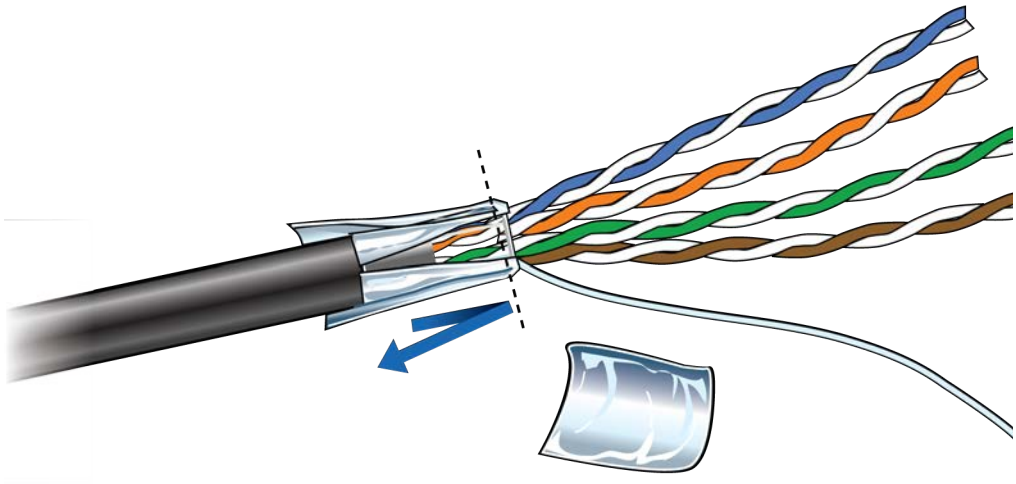

7 An extra piece of foil can be used to cover the foil seam.

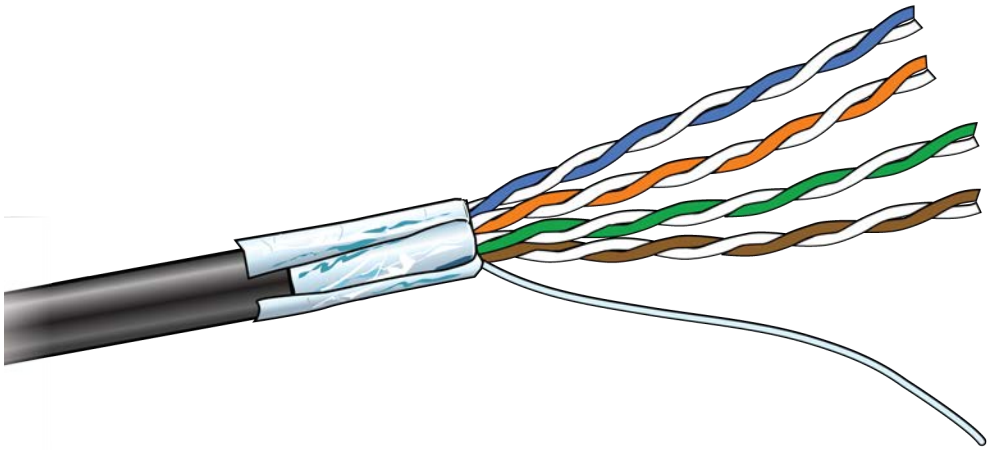

8 For an HGS620 termination, wrap the drain wire at least two times around and position it where the spring clips will capture them.

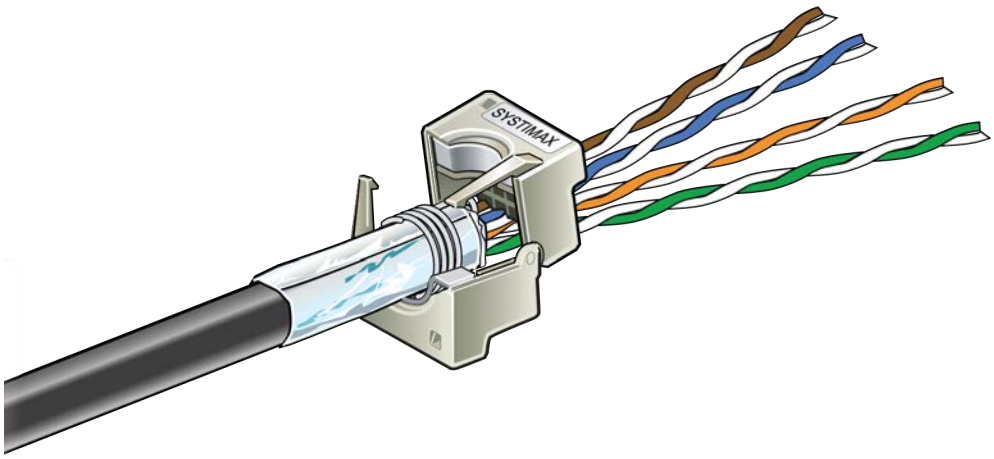

9 Tape over the foil for stability.

10 Trim the wire ends.

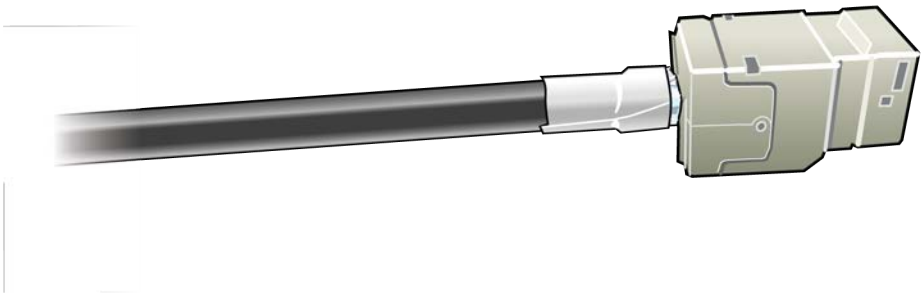

Cable grounding

For CAT-6A cables, the shield termination method is to use the ground lug and B-bond clip that are available in the 12A1 Grounding Kit.

1 Fold the foil back over the jacket end and wrap the drain wire around the end and push the ground lug over the wrap.

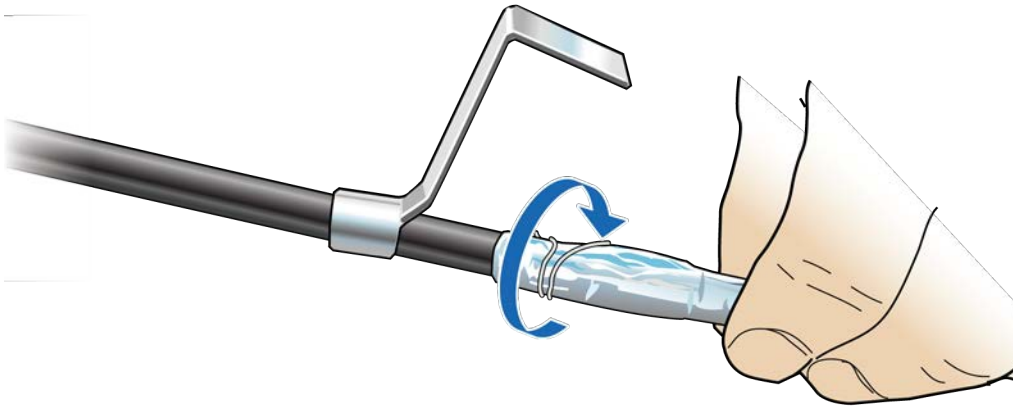

2 Open the B-bonding clip to be placed and closed over the grounding lug.

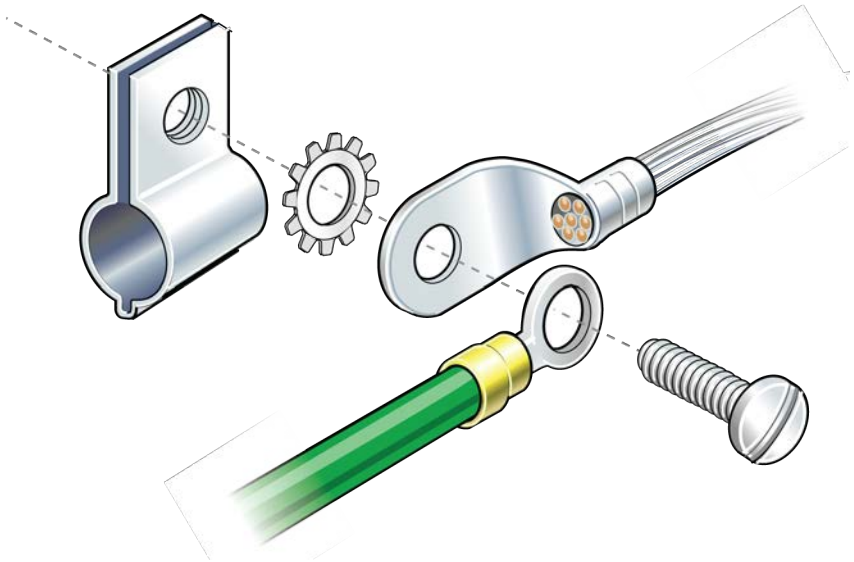

3 The lug tail can be cut off or used for ground attachment.

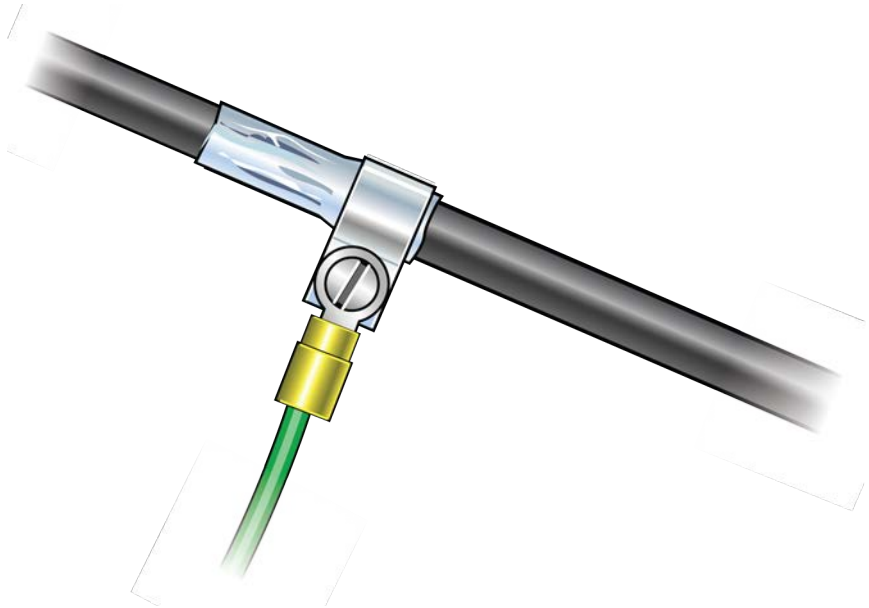

4 Treat the inner jacket as described in step 4 on page E-7.

For an isolated shield termination, the 1572A and 1592A outer jacket foil and drain wire are removed a short distance back from the termination and electrical tape is used to isolate the foil end.

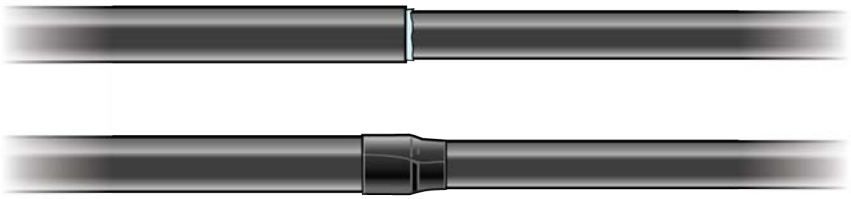

Lightning protection

CommScope recommends including lightning protection in your ONECELL system to isolate equipment from surge damage.

Important guidelines

- Verify hole diameter – blocking may need to remain outside the cover
- Maintain pair twists up to termination points
- Avoid having pairs crossing over each other

Indoor box

To protect the cables in an indoor installation from lightning damage, CommScope recommends using the ITW Linx CAT6-A-LAN protector.

NOTE

The gel filled outdoor cable types will still need blocking. See Cable splicing and Cable termination for instructions on blocking cable.

Figure E-5. CAT6-A lightning protector

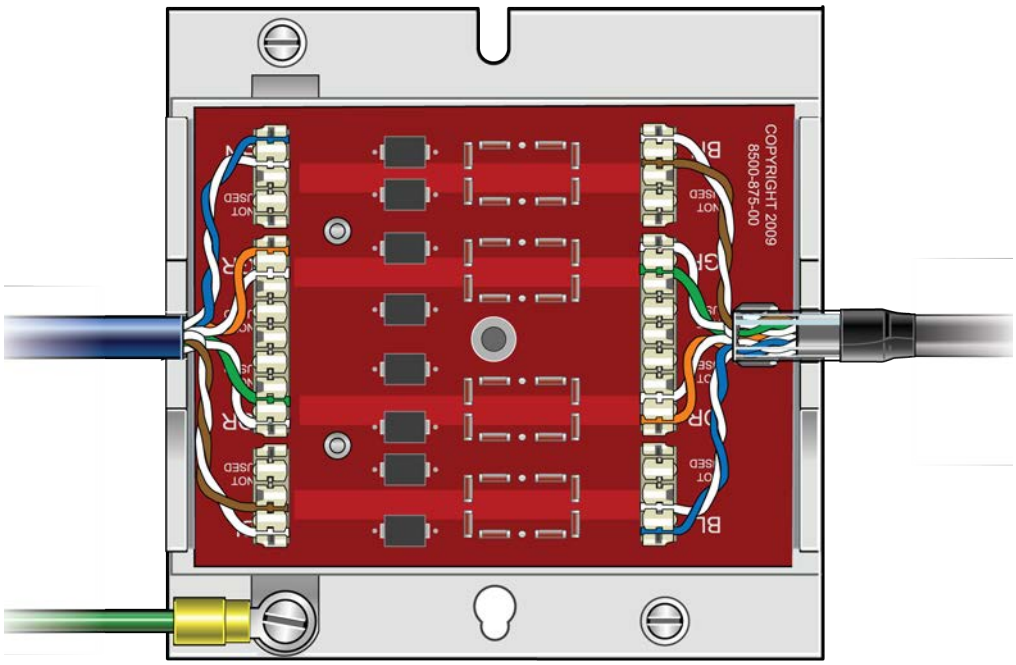

Outdoor protection

The following is an example of a pole mounted CAT-6A configuration for protecting remote equipment installed outdoors.

Table E-1 lists the recommended parts for installing the protection equipment.

Table E-1. CAT-6A protection equipment parts list

Part Name	Link to Part on Distributor's Web site
NEMA 4x enclosure	Allied Moulded fiberglass enclosure
Back panel	Allied Moulded back panel
Ground buss	Ditek surge protection buss
Bottom Mounted Liquid Tight Cordgrips	Heyco pre-assembled cordgrips
Bottom Mounted Liquid Tight Bushing	Heyco liquid tight bushings – snap-in
Protector	Ditek 110RJC6APOE Protector
Pole mount kit	Allied Moulded pole mount kit

Figure E-6. Remote equipment protection for outdoor devices

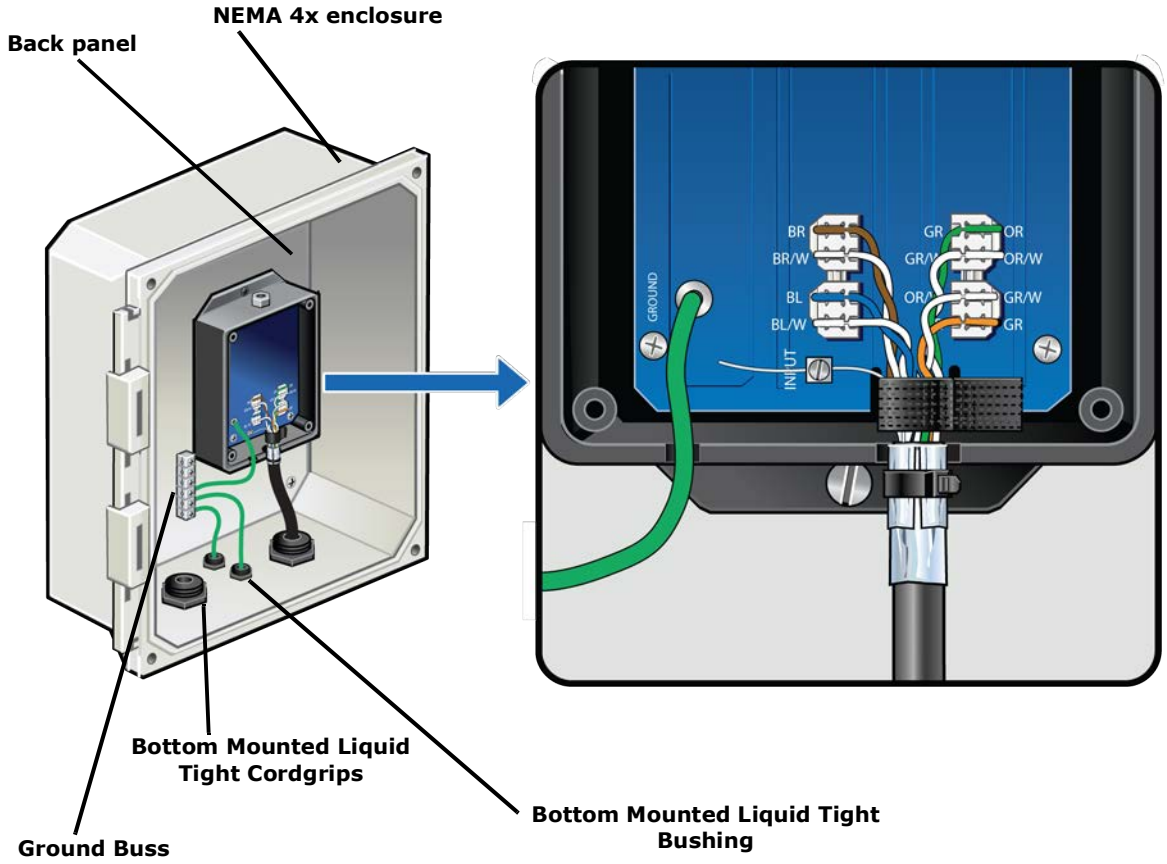

NOTE

Enclosure should be mounted close to the equipment for the best protection.

Figure E-7. Protector box mounted to pole

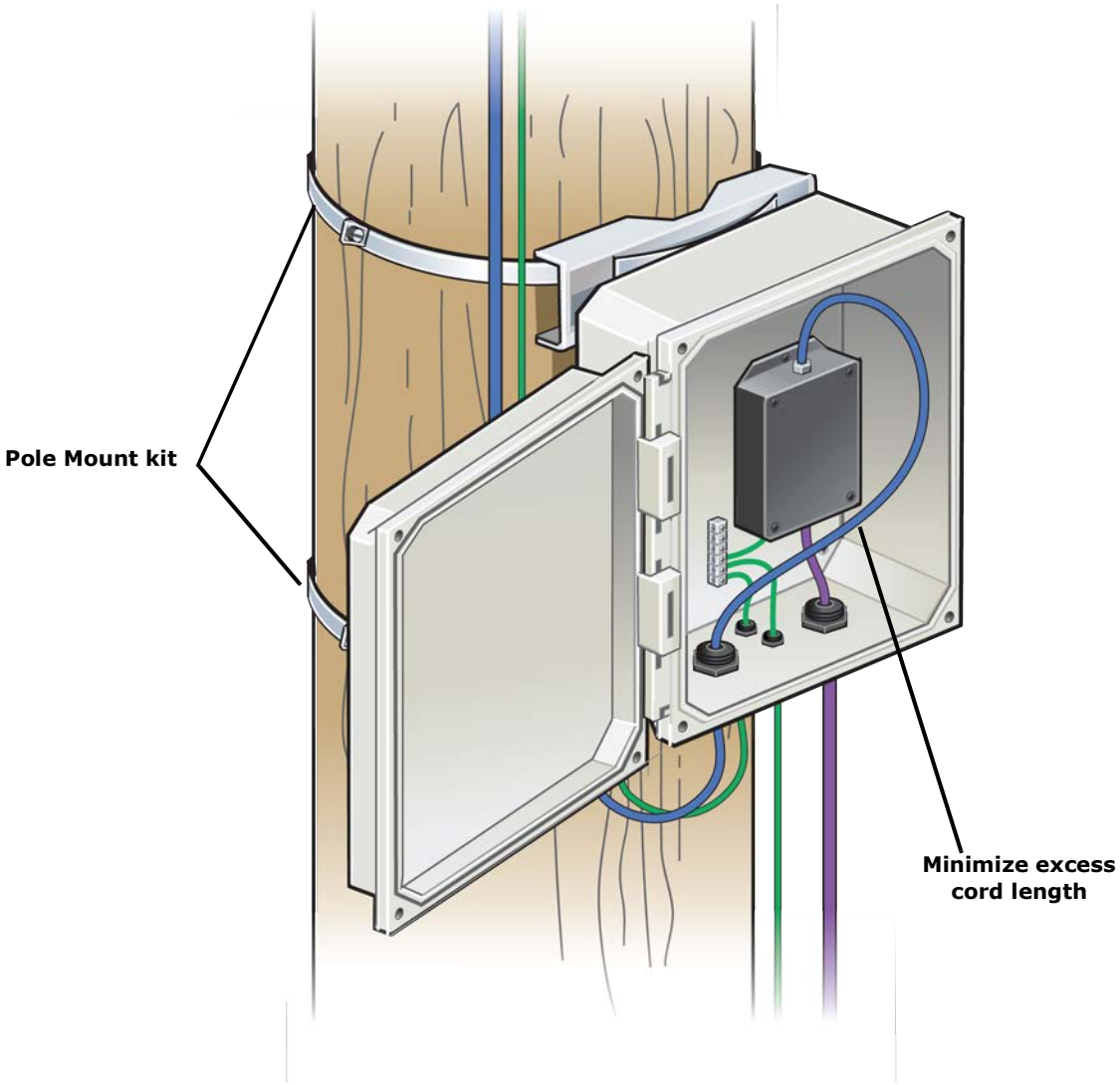

Ceiling connector

If surge protection is not needed, gel flooded cables can be blocked and transitioned to indoor cable using a ceiling connector. The following link is for the recommended CommScope part.

Ceiling connector

1 Terminate the indoor cable first – then lay down a bed of B sealant.

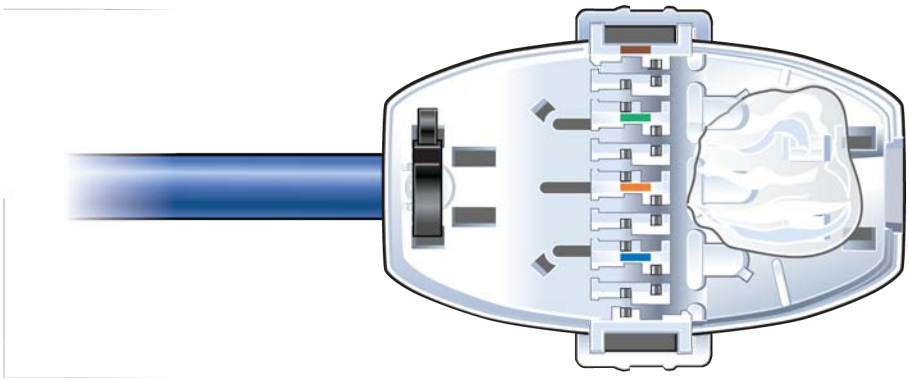

2 Clean all gel from the end of the OSP cable.

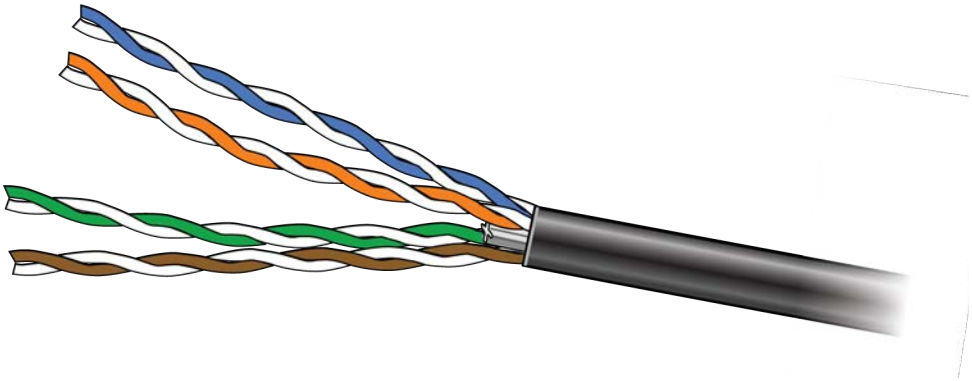

3 After the cable and conductors are positioned, fill the area around the cable end with sealant and close the connector housing.

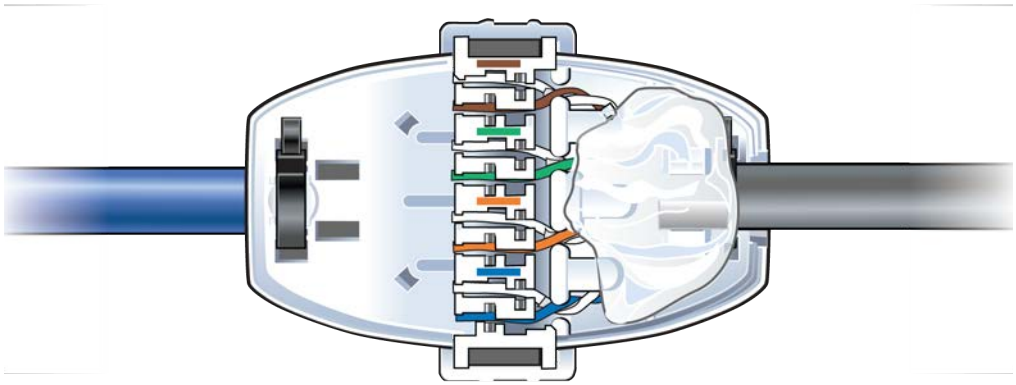

Patch panel

CommScope recommends installing a patch panel in the NOC to connect and manage CAT-6A cables. The following is a list of recommended CommScope 24 and 48 port patch panels and high density information outlets.

- 760163436_HFTP-HD6B-1U-24
- 760163444_HFTP-HD6B-2U-48
- 760163451_HFTPA-HD6B-1U-24
- 760163469_HFTPA-HD6B-2U-48
- 760163519_HFTP-J6
- 760163527_HFTP-J10G

For more information, go to CommScope.com or contact your CommScope customer representative.

Power separation guidelines

For power separation best guidelines, refer to the following standards:

- Telecommunications Pathways and Spaces, TIA-569-C
- Information technology – Implementation and operation of customer premises cabling – Part 2: Planning and installation, ISO/IEC 14763-2
- Information Technology – Cabling Installation – Part 2: Installation Planning and practices inside buildings, BS EN 50174-2

ONECELL® RP5200 Hardware Installation, Release 5.5
M0304AG 5.5.06 December 2021

COMMSCOPE®