Part III: Appendices

Appendix A **Safety**

Appendix B **Installation troubleshooting**

Appendix C **Specifications**

Appendix D **Field Replaceable Units**

Appendix E **Cable installation and power separation guidelines**

DRAFT

DRAFT

Appendix A

Safety

This appendix contains specifications for CommScope OneCell, including FCC information and technical data.

Radiation Exposure Statement	A-2
Human exposure limits for OneCell deployments	A-2

Radiation Exposure Statement

Important: Changes or modifications not expressly approved by CommScope LLC could void your authority to operate the equipment.

FCC Part 15

The Baseband Controller and RP5100 have been tested and found to comply with the limits for Class A equipment, pursuant to Part 15 of the FCC Rules.

NOTE

This equipment has been tested and found to comply with the limits for a Class A digital device, pursuant to part 15 of the FCC Rules. These limits are designed to provide reasonable protection against harmful interference when the equipment is operated in a commercial environment. This equipment generates, uses, and can radiate radio frequency energy and, if not installed and used in accordance with the instruction manual, may cause harmful interference to radio communications. Operation of this equipment in a residential area is likely to cause harmful interference in which case the user will be required to correct the interference at his own expense.

For more information, see the publication femtocells and Health at http:// www.femtoforum.org or visit the FCC website at www.fcc.gov.

EN55032

WARNING

This equipment is compliant with Class A of EN55032. In a residential environment, this equipment may cause radio interference.

Human exposure limits for OneCell deployments

The human exposure limits for the OneCell product is calculated by using the Maximum Permissible Exposure (MPE) method associated with fixed-type transmitter devices at a minimum exposure distance of 20 cm.

Table A-1 includes values for one Radio Point (RP5000 series) and four Radio Points per chassis.

Table A-1. RF exposure for OneCell at maximum power internal antennas for RP5000 series

Parameter	RPM-A5A11-B66	RPM-A5A11-B02	RPM-I5A11-B01	RPM-I5A11-B03	RPM-I5A11-B07
Tx Power (dBm) per antenna	24.13	24.23	24.25	24.00	24.70
Tx Loss (dB)	0	0	0	0	0
Tx Antenna Gain (dBi)	4	4	4	4	4
Transmitter Duty Cycle %	100	100	100	100	100
Number of Antennas (MIMO)	2	2	2	2	2
Contribution due to multiple antennas (dB)	3.0103	3.0103	3.0103	3.0103	3.0103
Derived Total EIRP (dBW)	1.140	1.240	1.260	1.010	1.710
Bands	66	2	1	3	7
Frequency Range (MHz)	2110-2200	1930-1990	2110-2170	1805-1880	2620-2690
Point Source Total EIRP (watts)	1.300	1.331	1.337	1.262	1.483
Power Density (W/m2) @ 20 cm	2.587	2.647	2.569	2.510	2.950

1. For persons with implants, the maximum calculated distance of 30cm. This applies to any combination of up to four radio modules in Bands 1,3 and 7.
2. For general public and workers, a measured distance of 5mm was determined. This applies to any combination of up to four radio modules in Bands 1,3 and 7.

For general public and workers, a calculated distance of 20cm was determined. This applies to any combination of up to four radio modules in Bands 2 and 66.

Parameter	RPM-I5A11-B17	RPM-A5A11-B12	RPM-A5A11-B14	RPM-A5A11-B05	RPM-A5A11-B30
Tx Power (dBm) per antenna	21.70	21.88	21.45	21.58	0.00
Tx Loss (dB)	0	0	0	0	0
Tx Antenna Gain (dBi)	4	4	4	2	5
Transmitter Duty Cycle %	100	100	100	100	100

Parameter	RPM-I5A11-B17	RPM-A5A11-B12	RPM-A5A11-B14	RPM-A5A11-B05	RPM-A5A11-B30
Number of Antennas (MIMO)	2	2	2	2	2
Contribution due to multiple antennas (dB)	3.0103	3.0103	3.0103	3.0103	3.0103
Derived Total EIRP (dBW)	-1.290	-1.110	-1.540	-3.410	-21.990
Bands	12	12	14	5	30
Frequency Range (MHz)	734-746	729 - 746	758 - 768	869-894	2350-2360
Point Source Total EIRP (watts)	0.743	0.775	0.702	0.456	0.006
Power Density (W/m2) @ 20 cm	1.478	1.541	1.396	0.907	0.013

Table A-2 includes values for one Radio Point (RP2000 and RP2100) and four Radio Points per chassis.

Table A-2. RF exposure for OneCell at maximum power internal antennas for RP2000 series

Parameter	Indoor RP-A2014 & RP-I2014		Rugged RP-A2114 & RP-I2114			
Tx Power (dBm) per antenna	21	21	21	21	21	21
Tx Loss (dB)	0	0	0	0	0	0
Tx Antenna Gain (dBi)	0	5	11.8	12	12.5	13.5
Transmitter Duty Cycle %	100	100	100	100	100	100
Number of Antennas (MIMO)	2	2	2	2	2	2
Contribution due to multiple antennas (dB)	3.0103	3.0103	3.0103	3.0103	3.0103	3.0103
Derived Total EIRP (dBW)	-5.990	-0.990	5.810	6.010	6.510	7.510
Bands	12,13,17	1,2,3,4,7,10,25	12,13,17	3	1,2,4,10,25	2620-2690
Frequency Range (MHz)	729-756	1805-2690	729-756	1805-1880	1930-2170	2620-2690
Point Source Total EIRP (watts)	0.252	0.796	3.811	3.991	4.477	5.637
Power Density (W/m2) @ 20 cm	0.501	1.584	7.582	7.939	8.908	11.214

Reference documents

[1] Federal Communications Commission Document OET Bulletin 65, Supplement C, 2001, Evaluating Compliance with FCC guidelines for Human Exposure to radio frequency Electromagnetic Fields, US Federal Communications Commission, Office of Engineering and Technology June 2001.

[2] Federal Communications Commission Document OET Bulletin 56, “Questions and answers about biological effects and potential hazards of radio frequency electromagnetic fields”, Federal Communications Commission Office of Engineering and Technology, August 1999.

[3] ICNIRP Guidelines for limiting exposure to time varying electric, magnetic and electromagnetic fields up to 300 GHz. International Commission on Non Ionizing Radiation, published in Health Physics 74 (4): 494-522; 1998

[4] ICNIRP Statement on EMF-Emitting New Technologies, International Commission on Non-Ionizing Radiation, published in Health Physics 94 (4):376-392, 2008

[5] 3GPP Document 3GPP TS 36.104 version 10.11.0 Release 10,” LTE Evolved Universal Terrestrial Radio Access (E-UTRA); Base Station (BS) radio transmission and reception”

Appendix B

Installation troubleshooting

This section contains information on troubleshooting the OneCell installation. It includes the LED patterns for the Baseband Controller and Radio points.

Baseband Controller LED patterns	B-2
Radio Point LED patterns	B-4

DRAFT

Baseband Controller LED patterns

The Baseband Controller has four LEDs on the front panel. The following table shows

- Display pattern for each LED
- What the pattern indicates
- Action to take, if any, to resolve the issue

LED	Display Pattern	Indicates	Action to Take
STATUS	Green, solid	Power On Sectors up	None
	Amber, solid	Self-test failure	Replace Baseband Controller
	Green, blinking	Firmware upgrade from DMS Sectors not up	None
	Amber, blinking	No configuration from DMS	• Check DMS availability • Check if the provisioning is correct • Escalate to operator
	OFF	BC rebooting after upgrade	None
	Red, solid*	Error in system - software or hardware issues detected	Replace Baseband Controller Module
RP ERROR	Green, solid	Power On	None
	Amber, solid	Self-test failure	Replace Baseband Controller
	Amber, blinking	No Radio Points connected	Check RP cable
	Off	Radio Points connected, firmware upgrade from DMS	None
	Red, blinking	Radio Point alarm - PLL state unlock; service impacting alarm from Radio Point (alarm in one or more RP)	Check 1588 VLAN configuration

DRAFT

LED	Display Pattern	Indicates	Action to Take
TIMING LED	Green, solid	Power On, timing	None
	Amber, solid	Self-test failure	Replace Baseband Controller
	Amber, blinking	No timing	Check GPS antenna connection feed
	Off	Firmware upgrade from DMS	None
	Red, solid*	Error in system GPS module down Software/Hardware issues	Replace Baseband Controller Module
CORE LED	Green, solid	Power On Connection to MME	None
	Amber, solid	Self-test failure	Replace Baseband Controller
	Amber, blinking	No connection to MME IPsec is up	• Check the MME configuration on the BC • Check if MME is reachable
	Off	Firmware upgrade from DMS	None
	Red, blinking	Internet connection IPsec down	• Check if Security Gateway is reachable • Check security credentials
	Red, solid*	No Internet Interface hardware issues	Replace Baseband Controller Module
* Note: When all of the LEDs are solid red, there is a BC hardware failure.			

DRAFT

Radio Point LED patterns

This section contains LED patterns for RP5100 series and RP2000 series.

RP5100i LED patterns

The Radio Point RP5100i supports six LEDs on the front cover.

Indicators are for

- four radios (one for each)
- ETH 1 – MR PORT:POE++, POE+, Ethernet link
- ETH 2– SR PORT:POE++, POE+, Ethernet link

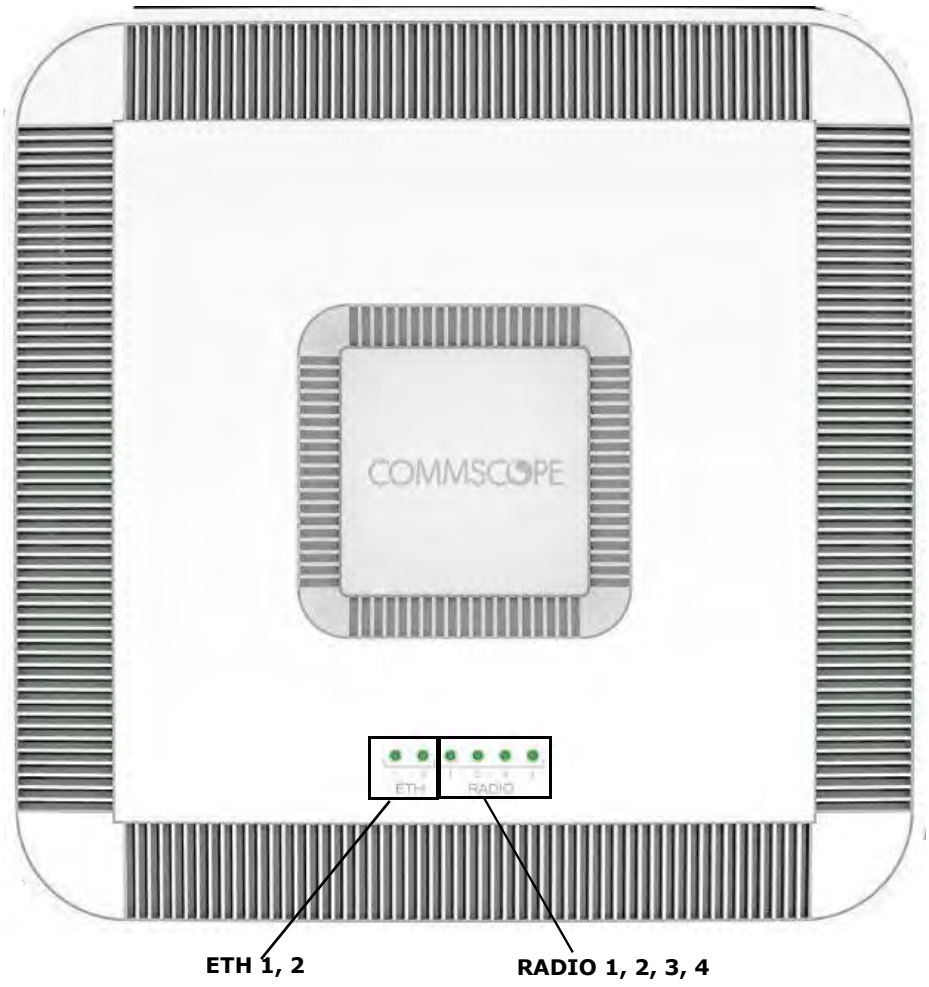

DRAFT

The following table shows:

- Display pattern for each LED
- What the pattern indicates
- Action to take, if any, to resolve the issue

LED	Display Pattern	Indicates	Action to Take
RADIO 1 RADIO 2 RADIO 3 RADIO 4	Green, solid	Power On, transmitting	None
	Amber, solid	• RFTxState OFF • No Controller Assigned • No Timing	• Check 1588 VLAN configuration • Verify that the Radio Point is in STANDBY because more than 32 RPs are connected
	Red, solid	• No connection to Controller • HW error • Low Power	Hardware error – replace Radio Point
	Green, blinking	Firmware upgrade	None
	Amber, blinking	RF module Self-Test Failure	Replace Radio Module
Eth 1	Green, solid	Power On, PoE++ power	None
	Amber, solid	Link up, no power	Check that the Ethernet cable is connected to the Radio Point
	Green, blinking	PoE+ power	None
	Amber, blinking	Platform Self-Test Failure	Replace Radio Point
	Red, solid	Ethernet port error	• Connect the Ethernet cable between the Baseband Controller and Radio Point • Replace Radio Point
Eth 2	Green, solid	Power On, PoE++ power	None
	Amber, solid	Link up, no power	Check that the Ethernet cable is connected to the Radio Point
	Green, blinking	PoE+ power	None
	Amber, blinking	Platform Self-Test Failure	Replace Radio Point
	Red, solid	Ethernet port error	• Connect the Ethernet cable between the Baseband Controller and Radio Point • Replace Radio Point
* **Note**: When all of the LEDs are solid red, there is an RP hardware failure.			

DRAFT

RP5100r LED patterns

The Radio Point RP5100r has one LED. The following table includes the LED patterns.

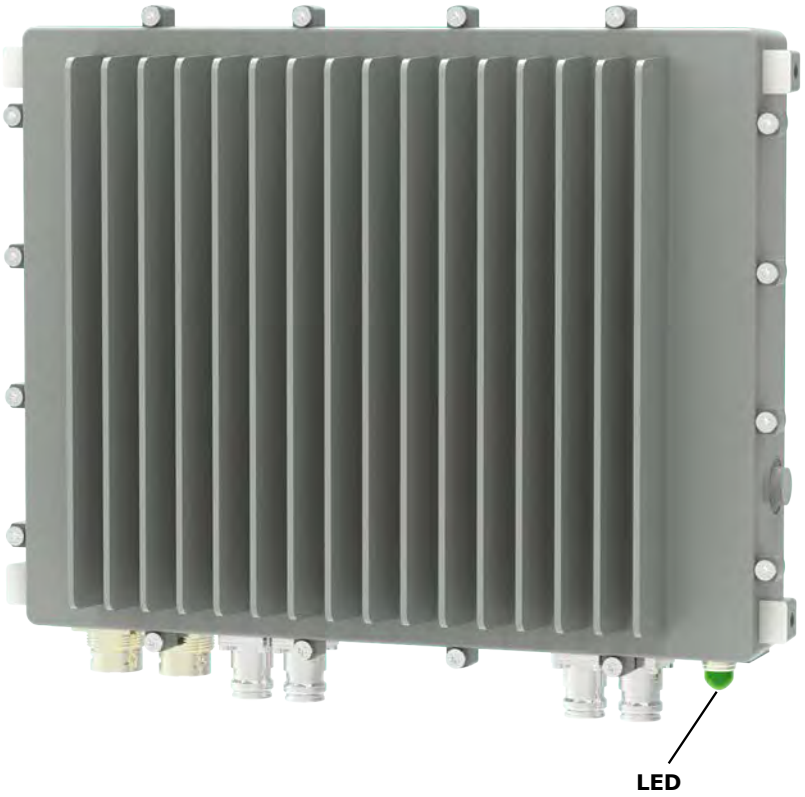

Display Pattern	Indicates	Action to Take
Green, blinking	• Not all available radio modules are in use • RFTx ON for all radio modules	No action required
Green, solid	• All available radio modules are in use • RFTx ON for all radio modules	No action required
Red, solid	Error in the system. • No module connected to the BC • All modules have low power	Replace Radio Point
Red, blinking	No modules in use **Note:** The radio modules may be connected to the BC.	• Check the connection between the RP and BC. • Check that the BC admin status is UP.
Green, fast blinking	Software upgrade	No action required

DRAFT

RP2000 series LED patterns

The RP2000 and RP2100 Radio Points have one LED. The LED for the RP2000 (Indoor) is on the front cover. The LED for the RP2100 (Rugged) is on the bottom of the Radio Point where the Ethernet cable port is located. The following table shows:

- Display pattern for each LED
- What the pattern indicates
- Action to take, if any, to resolve the issue

LED	Display Pattern	Indicates	Action to Take
STATUS	Green, solid	Power On RFTx state is ON	None
	Amber, solid	Self-test failure	Replace RP
	Green, blinking	Firmware upgrade Connected to Baseband Controller	None
	Amber, blinking	PLL state – unlock RFTx state – OFF or suspended L2 path verification failed Admin state – STANDBY	• Check 1588 VLAN configuration • Verify RP is in STANDBY because more than 32 Radio Points are connected to the same Baseband Controller
	Red, blinking	No connection to Baseband Controller (http)	• Connect the Ethernet cable between the Baseband Controller and Radio Point • Replace RP
	Red, solid	Error in system – software or hardware issues Interface issues detected AdminState – UNLOCKED	• Connect the Ethernet cable between the Baseband Controller and Radio Point • Upgrade Radio Point • Replace Radio Point

DRAFT

DRAFT

Appendix C

Specifications

This appendix contains specifications for CommScope OneCell, including FCC information and technical data.

Environmental and physical specifications	C-2
SPF/SPF+ specifications	C-3

DRAFT

Environmental and physical specifications

The following table lists the electrical ratings and technical data for the Baseband Controller, RP5100 series and RP2000/RP2100.

Table C-1. Environmental and Physical specifications

Baseband Controller	
Environmental	Operating Temperatures: 0°C to 40°C Operating Humidity 10%-90% Non-Condensing
Power Requirements	120/230 VAC,1.7/0.85 A, 50/60 Hz
Power Consumption	204W Typical / 216W Maximum
Dimensions	1 Rack Unit Chassis hosts 2 Baseband Controller module units 19" W x 1.75" H x 18.8" D (483mm W x 44.4mm H x 477mm D)
Weight	Single BC 13.1 lbs (5.9 kg) Dual BC 19.1 lbs. (8.7 kg)
RP5100i	
Environmental	Operating Temperatures: 0 to 50°C (Plenum rated: UL-2043) Operating Humidity 10%-95% Non-Condensing Operating temperatures: 0°C to 50°C Active Cooling/Fans, acoustic noise: 39.5 dBA at 25C
Power Requirements	IEEE802.3bt-type 4 PoE++
Power Consumption	Up to: 72W (26W + 11.5W per RM)
Dimensions	13.54" W x13.54 H x 3.35" D (344.0 mm W x 344.0 mm H x 85.0 mm D)
Weight	8.82 lbs (4 kg)
RP5100r	
Environmental	Operating Temperatures: 0 to 50°C (Plenum rated: UL-2043) Operating Humidity 10%-95% Non-Condensing Operating temperatures: 0°C to 50°C Active Cooling/Fans, acoustic noise: 39.5 dBA at 25C
Power Requirements	IEEE802.3bt-type4 PoE++
Power Consumption	Up to: 72W (26W + 11.5W per RM)
Dimensions	14.9" W x 12.64" H x 4.06" D (378.7 mm W x 321.1 mm H x 102.5 mm D)

DRAFT

Table C-1. Environmental and Physical specifications *(continued)*

Weight	21.7 lbs (9.85 kg)
RP2000	
Environmental	Operating Temperatures:0°C to 50°C (Plenum rated: UL-2043) Operating Humidity: 10%-95% Non-Condensing
Power Requirements	802.3at PoE+
Power Consumption	22W Typical / 25.5W Maximum
Dimensions	7.4" W x 9.25" H x 1.75" D (188mm W x 235mm H x 45mm D)
Weight	2.6 lbs (1.2 kg)
RP2100	
Environmental	Operating Temperatures: -40C to 60°C
Power Requirements	802.3at PoE+
Power Consumption	22W Typical / 25.5W Maximum
Dimensions	9.3" W x 9.1" H x 3.0" D (236mm W x 230mm H x 76mm D)
Weight	8 lbs (0.6 kg)

SPF/SPF+ specifications

The following table lists the SPF and SPF+ specifications required for the Baseband Controller.

1G SFP LC SX Transceiver; 220M to 1K M
1G SFP LC LX transceiver, 550M 10K M
10G SFP+ LC SR Transceiver; Multi mode 26M to 300M
SFP-10G-LR Transceiver; Single mode 10KM
10G Direct attach SFP+ cable; Twin ax Cable; 7M (must be compatible with HP & Cisco switches

DRAFT

DRAFT

Appendix D

Field Replaceable Units

This appendix contains instructions for replacing Baseband Controller modules and Radio Points in the OneCell system.

FRU overview	D-2
Replacing Baseband Controller modules	D-2
Replacing RP5100 series Radio Points	D-16
Replacing RP5100i RF modules	D-47
Replacing RP2000 series Radio Points	D-52
RP post-replacement verification	D-85

DRAFT

FRU overview

Field Replaceable Units (FRUs) are modules that can be replaced on-site in case of equipment failure. On-site and off-site activities are required when replacing modules. The off-site activities are achieved by using DMS.

This appendix contains details for replacing Baseband Controllers (BC) modules and Radio Points (RP).

Replacing Baseband Controller modules

The following procedure provides instructions for replacing the OneCell Baseband Controller (BC) module in a live network environment.

This procedure is divided into four sections:

- Prerequisites
- Off-site activities
- On-site activities
- Post-Install Verification

Prerequisites

The following table contains a checklist of prerequisites for replacing a BC.

	Prerequisite
	UDEF file for DMS import
	SSH password
	Replacement OneCell BC module
	Laptop for Web GUI access
	Config.tar file containing operator information **Note:** This file should be saved on the Laptop that will be used for WebGUI access.
	License file (if applicable) **Note:** This file should be saved on the Laptop that will be used for WebGUI access.

DRAFT

	Prerequisite
	Configuration details for WebGUI commissioning **Note:** These parameters are derived from the failed unit being replaced.
	Ethernet cable **Note:** Required for connecting the laptop to the OneCell Baseband Controller Management port
	DMS FTP IP address

Off-site activities

Before replacing the BC module, import a new EDF file to the DMS. This file contains the BC MAC address and HeMs password specific to the new BC.

1. Access the FTP location on DMS using ftp protocol, port 2100.
2. Upload the EDF file to */appdata/dms/import/factory*.
3. Access the DMS Network console from a supported Web Browser.

   NOTE: The DMS GUI supports Internet Explorer versions 9, 10 and 11 and Chrome version 36 Web browsers, and a screen resolution of 1024 x 768 and higher.

4. Enter the IP address for the Network Management portal.

   `http://<IP Address DMS server>/networkconsole`

   The Sign In dialog box displays.

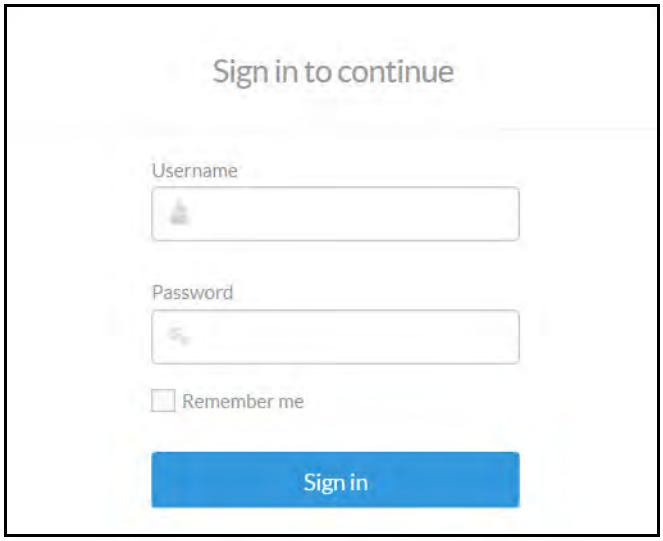

DRAFT

5 Enter Username and Password. The Search Device screen displays.

6 Enter the device Mac ID.

The Network Management Portal opens.

7 Select Import tab located in the left margin of the Device console.

8 Select File Import.

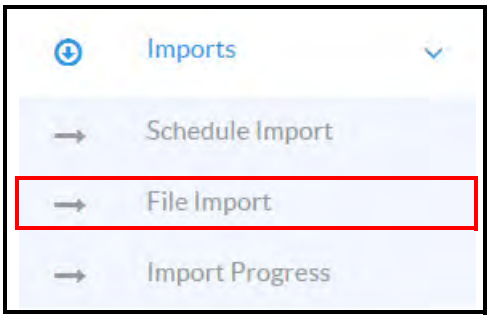

9 Browse and select the desired import file. The EDF file format is xml.

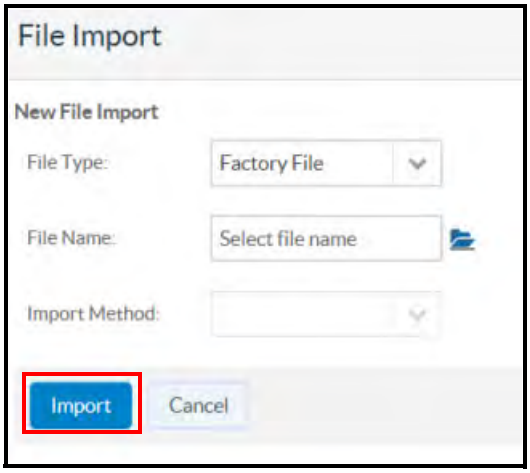

10 Click **Import**.

11 Click **Import Progress**. Wait for the import to be completed.

DRAFT

Import Progress

File Type	Operation/File Name	Import Method	Start time	End time	Import Status		Devices Impacted
File Import	uedf-factory-NW-0005B9A10_Sim_CU.xml	FACTORY	2015-05-19 18:49:11 IST		In Progress	View Details	
File Import	servicesetting_ServiceSettings_new.xml	COMPLETE	2015-05-19 18:38:33 IST		In Progress	View Details	
File Import	servicesetting_ServiceSettings_new_20150429145834.xml	AUTO	2015-05-16 00:14:35 IST		In Progress	View Details	2
File Import	servicesetting_ServiceSettings_new.xml	AUTO	2015-05-15 22:49:20 IST		In Progress	View Details	
File Import	servicesetting_ServiceSettings_new.xml	AUTO	2015-04-30 11:32:00 IST		In Progress	View Details	112
File Import	servicesetting_ServiceSettings_new_20150429145834.xml	COMPLETE	2015-04-30 10:29:12 IST		In Progress	View Details	112

12 Click the Operational History icon in the upper right corner of the page.

The Operational History page displays. Check that the file import was successful.

Operational History

View 20 entries

Start Time	Category	Method	File Name	Operation Type	Operation Status		
2015-05-15 18:16:08 IST	Proactive Scheduled Job	All	Shiva	Provision	Success	View Details >	
2015-05-15 18:10:41 IST	Service Package		S1000 - 1.0.1.0-NR06-10	Service Package Save	Success	View Details >	22
2015-05-15 18:04:56 IST	Service Package			Service Package Upgrade	Success	View Details >	22
2015-05-15 17:02:14 IST	Reports	Pws Report Generation	FemtoLTE_CMAS.XML	Pws Report	Success	View Details >	
2015-05-15 16:22:42 IST	Reports	Pws Report Generation	FemtoLTE_CMAS.XML	Pws Report	Success	View Details >	
2015-05-15 13:05:17 IST	Service Package		S1000 - 1.0.1.0-NR06-10	Service Package Save	Success	View Details >	
2015-05-15 13:01:20 IST	Service Package		S1000 - 1.0.1.0-NR06-10	Service Package Save	Success	View Details >	22
2015-05-15 13:00:11 IST	File Import	FACTORY	uedf-factory-RW-0005B9A200_Sim_RP.xml	FACTORY	Success	View Details >	
2015-05-15 12:58:10 IST	File Import	FACTORY	uedf-factory-NW-0005B9A10_Sim_CU.xml	FACTORY	Success	View Details >	
2015-05-15 08:30:02 IST	Purge	SPS Audit Report Purge		SPS Audit Report	Success	View Details >	
2015-05-15 05:30:06 IST	Reports		0005B9-LTEWiFiSC_Delta-device-config-2015-05-15-05-30.txt	Device Delta Report	Success	View Details >	
2015-05-15 05:30:04 IST	Reports	Pws Report Generation	FemtoLTE_CMAS.XML	Pws Report	Success	View Details >	
2015-05-15 05:30:03 IST	Reports	SPS Audit Report Generation	SPS_AUDIT_REPORT_2015-05-15 05:30:02	SPS Audit Report	Success	View Details >	
2015-05-15 05:30:02 IST	Reports	Device State Report Generation	Master-device-status-2015-05-15-05-30	Device State Report	Success	View Details >	

13 Login to the Device console.

DRAFT

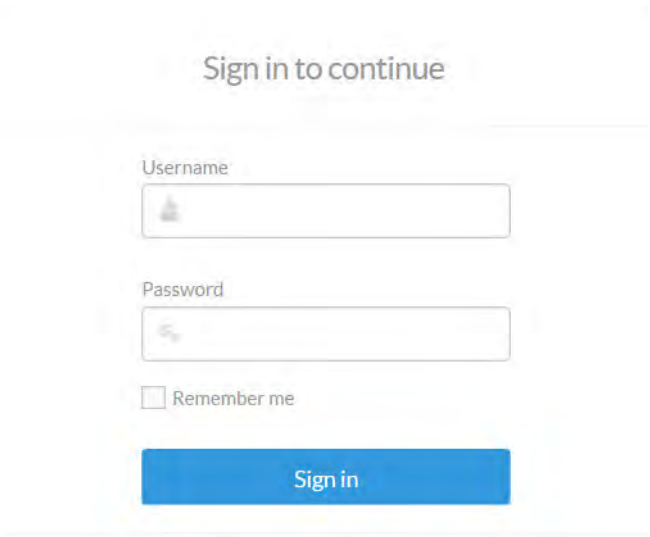

14 Enter the MAC ID of the replacement Baseband Controller.

NOTE: Your CommScope service engineer will provide the new BC MAC ID.

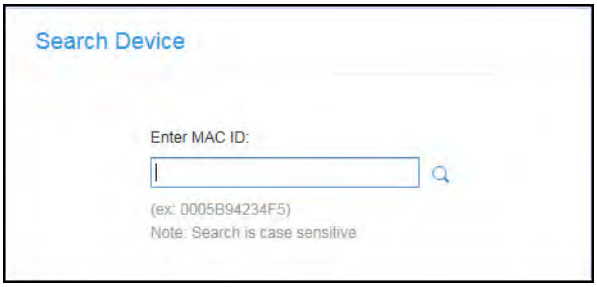

15 Select the Device configuration tab on the left margin.

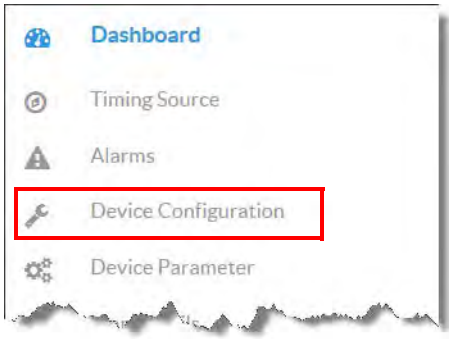

16 Configure the same parameters from the BC being replaced.

DRAFT

17 Select the Dashboard menu item.

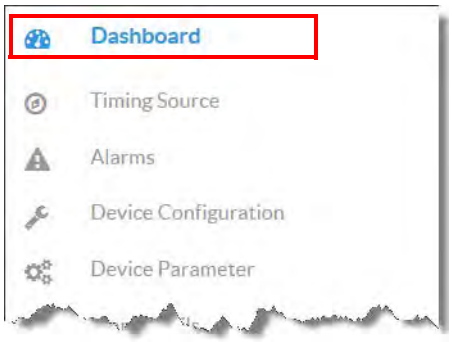

The Controller will display "Out of Service" until the On-site installation is completed.

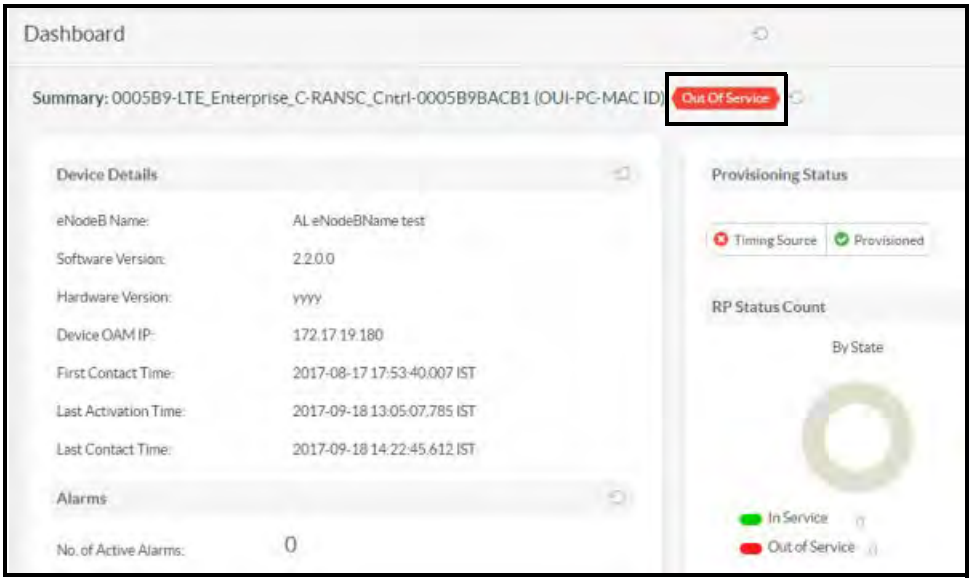

On-site activities

After the off-site activities are complete, you are ready to replace the BC module on-site.

1 Power off the OneCell Baseband Controller.

DRAFT

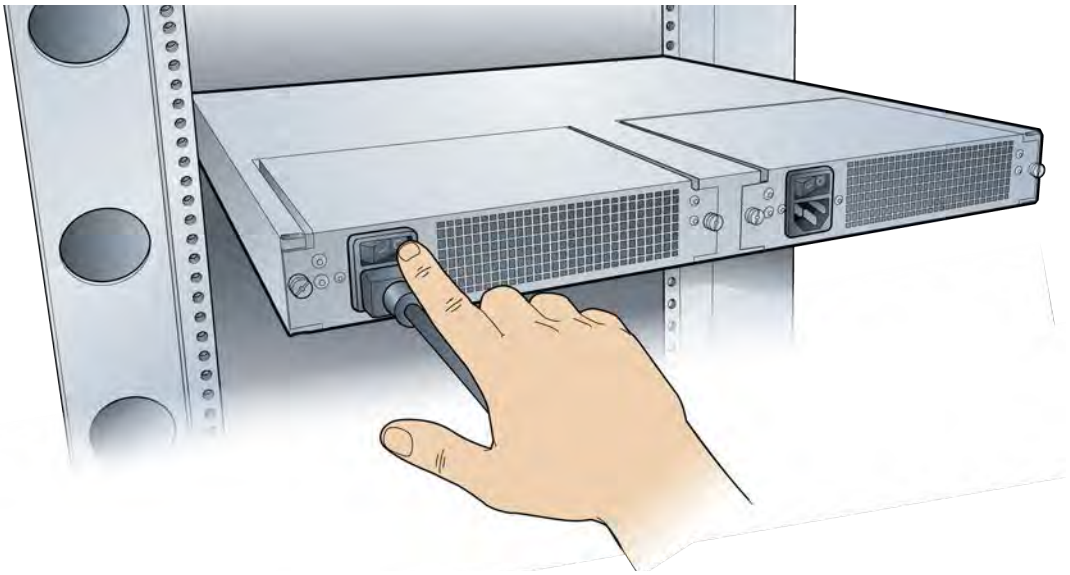

2 Make a note of the existing cables connected to the failed OneCell BC.

3 Label the cables identifying the port locations on the BC. Disconnect the cables.

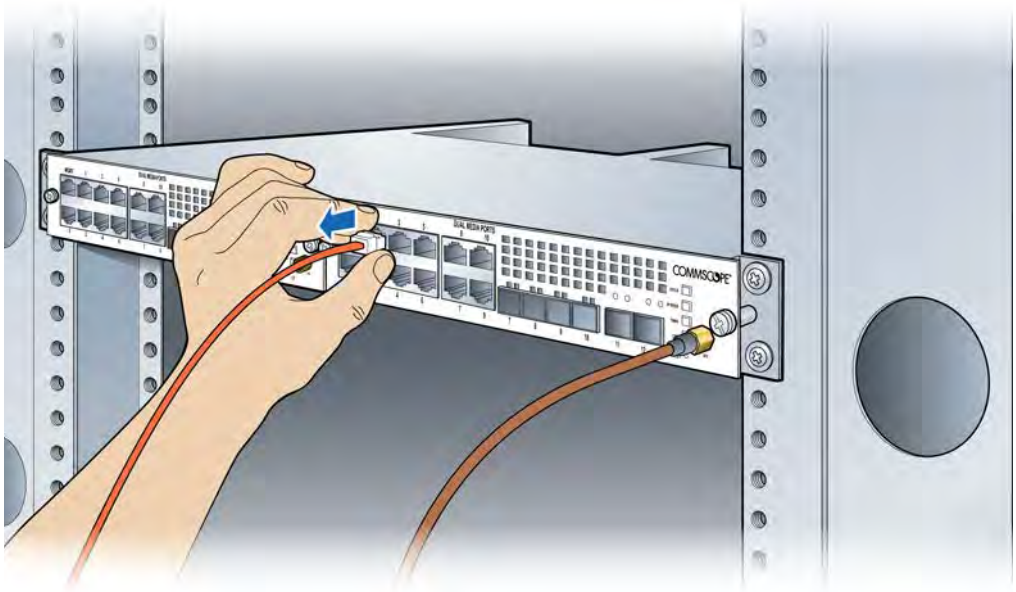

4 Remove the GPS antenna cable from the BC (if applicable).

DRAFT

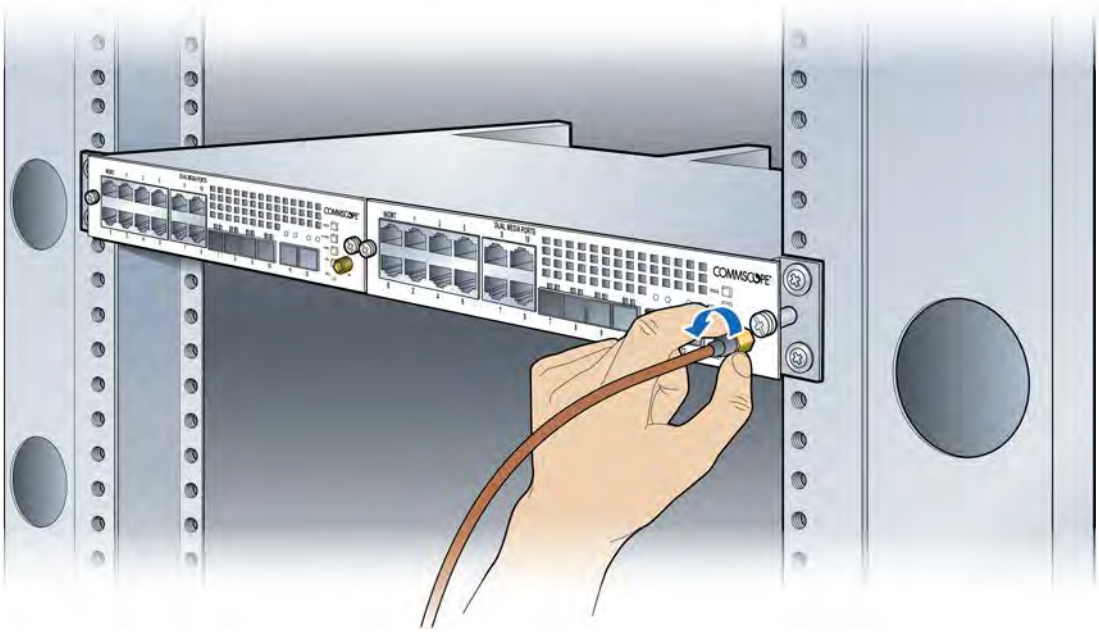

5 Turn the mounting screws on the BC front panel counterclockwise to loosen them and remove the BC module.

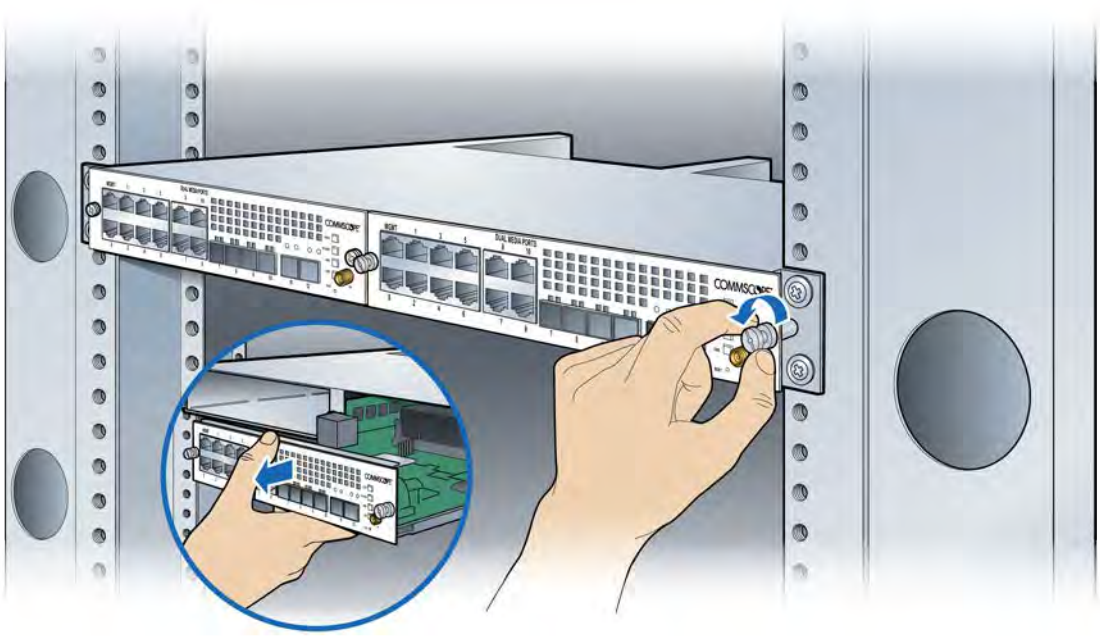

6 Insert the new BC module into the chassis and tighten the mounting screws.

DRAFT

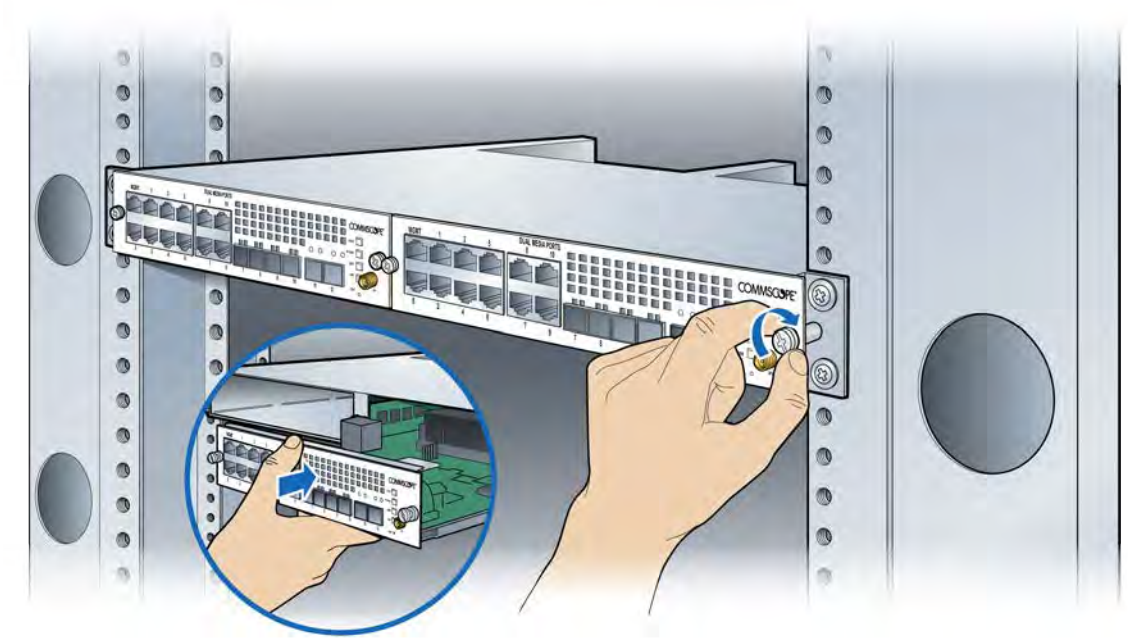

7 Re-connect the cables as noted in step 3.

DRAFT

8 Power on the controller.

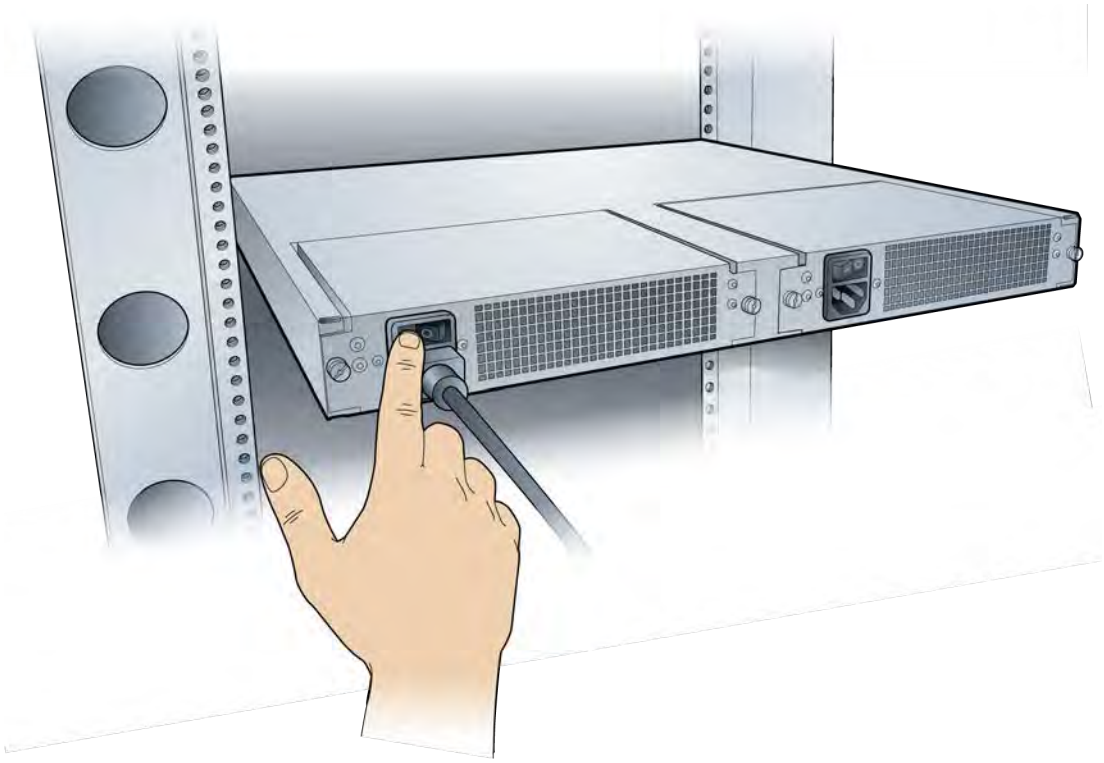

9 Configure the BC. Follow configuration procedures starting with Accessing the Web GUI on page 8-19.

Post-Install Verification

On-site

The operational state of the OneCell system can be determined by the LED status on the BC's front panel. Additional information can be attained from the WebGUI status screens.

Start the verification with Verify the OneCell system installation on page 9-2 and continue through the end of the chapter.

Off-site

1 Open a supported Web browser.

NOTE: The DMS GUI supports Internet Explorer versions 9, 10 and 11 and Chrome version 36 Web browsers, and a screen resolution of 1024 x 768 and higher.

DRAFT

2 Enter the IP address for the Device Management portal.

```
http://<IP Address DMS server>/deviceconsole
```

The Sign In dialog box displays.

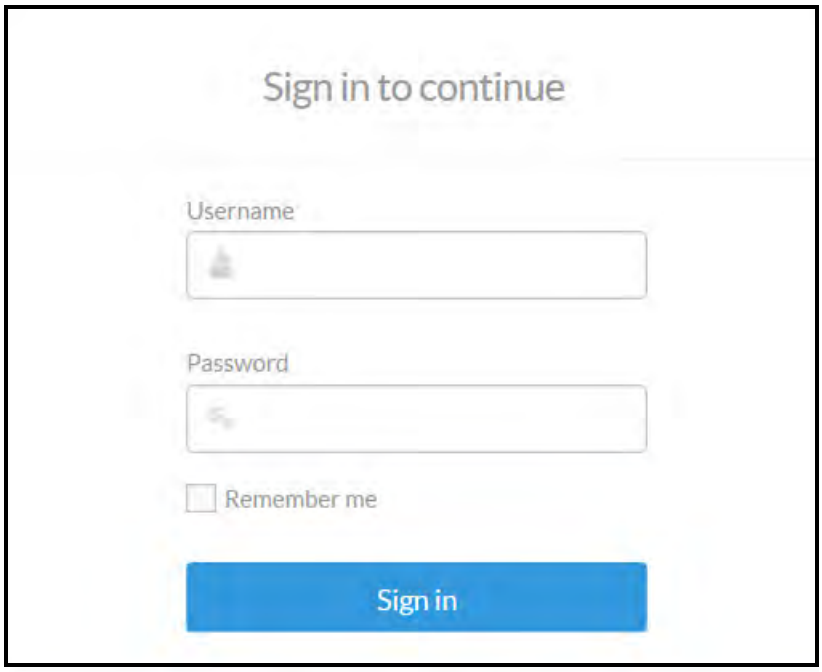

3 Enter Username and Password. The Search Device screen displays.

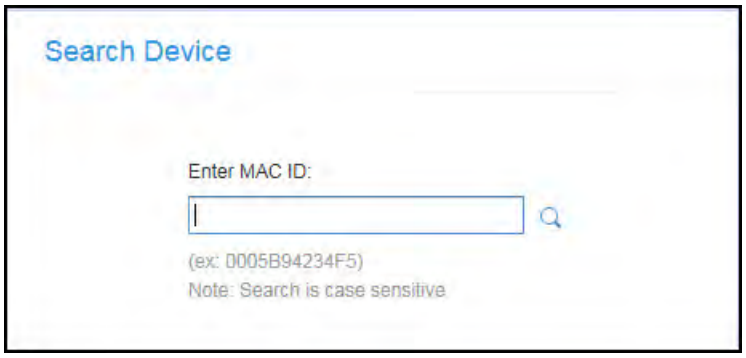

4 Enter the MAC ID of the new BC.

The BC Dashboard displays. The Summary at the top of the page should show "Ready."

DRAFT

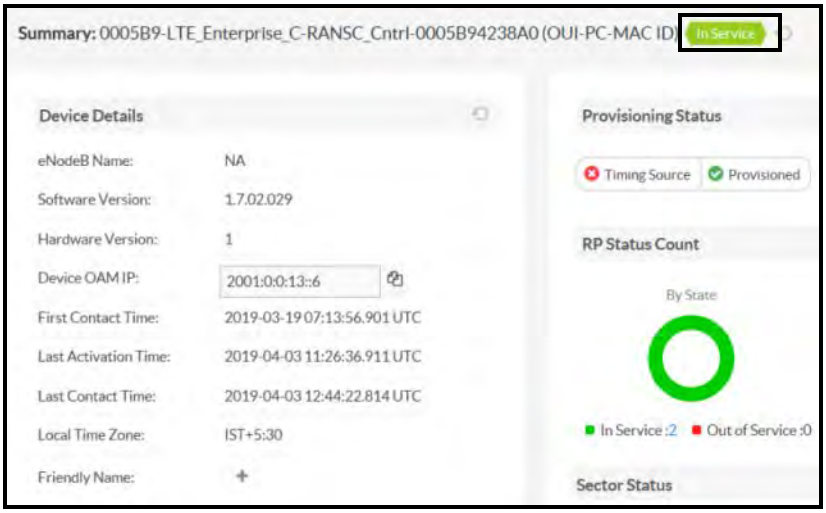

NOTE: Provision the remaining Device configurations to align with the failed BC configuration on the DMS Device Configuration page.

5 Scroll to the bottom of the page to view the Device PnP status.

If all of the PnP boxes have green checks, the BC replacement is successful. Stop here.

If one or more of the PnP boxes are red, those activities failed. Go to the Device PnP page to identify the failed activity.

Replacing Radio Points prerequisites and on-site activities

Prepare the network for the Radio Point replacement.

- Prerequisites
- On-site activities

Prerequisites

The following table contains a checklist of prerequisites for replacing an RP.

	Prerequisite
	SSH password
	Replacement OneCell RP module

DRAFT

	Prerequisite
	Laptop for Web GUI access
	Ethernet cable **Note:** Required for connecting the laptop to the OneCell Baseband Controller Management port

On-site activities

Before replacing the RP, delete the RP from the system using the WebGUI.

1 Connect the Ethernet cable to the MGMT port on the BC's front panel.

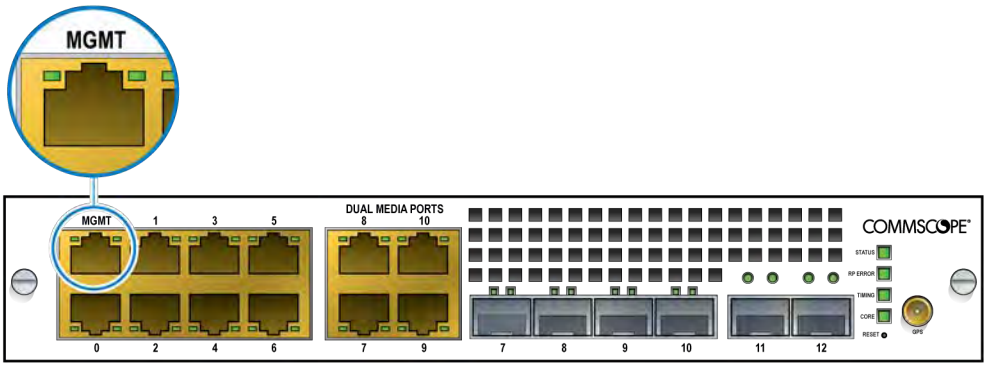

2 Open a supported browser.

3 Enter the IP address for the GUI, using the format below.

https://<IP address of Management Interface>:6002

Example:

`https://192.168.8.1:6002`

The Sign In dialog box appears.

DRAFT

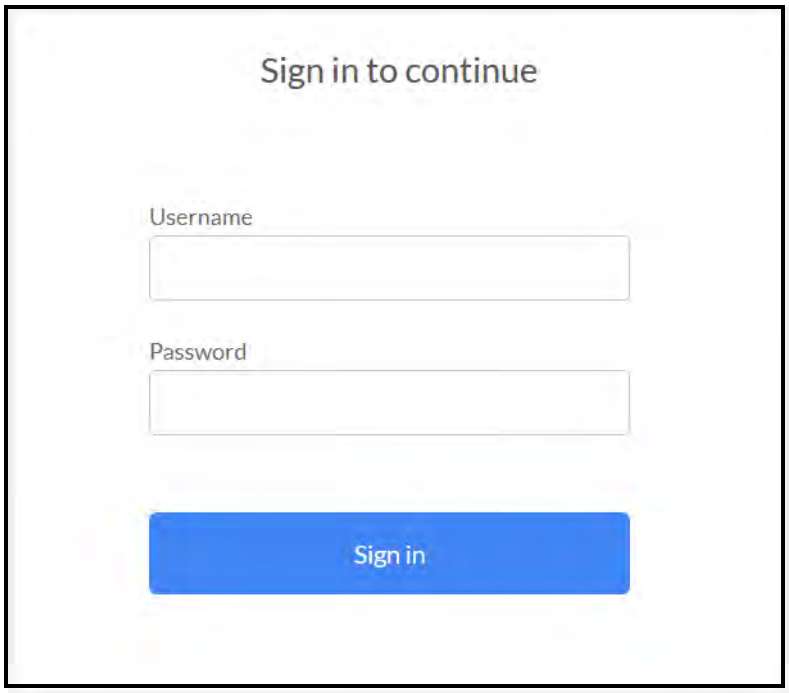

4 Ensure the Management Mode tab is selected. The Dashboard displays.

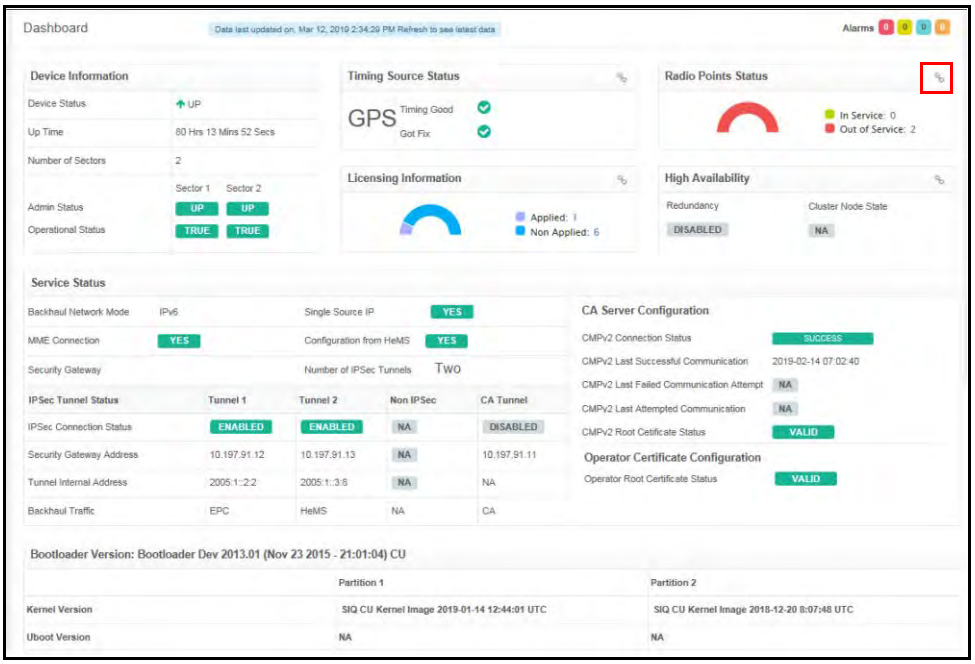

DRAFT

5 On the Dashboard, click the Radio Points link. The Radio Points Dashboard displays.

6 Click the RP Information tab.

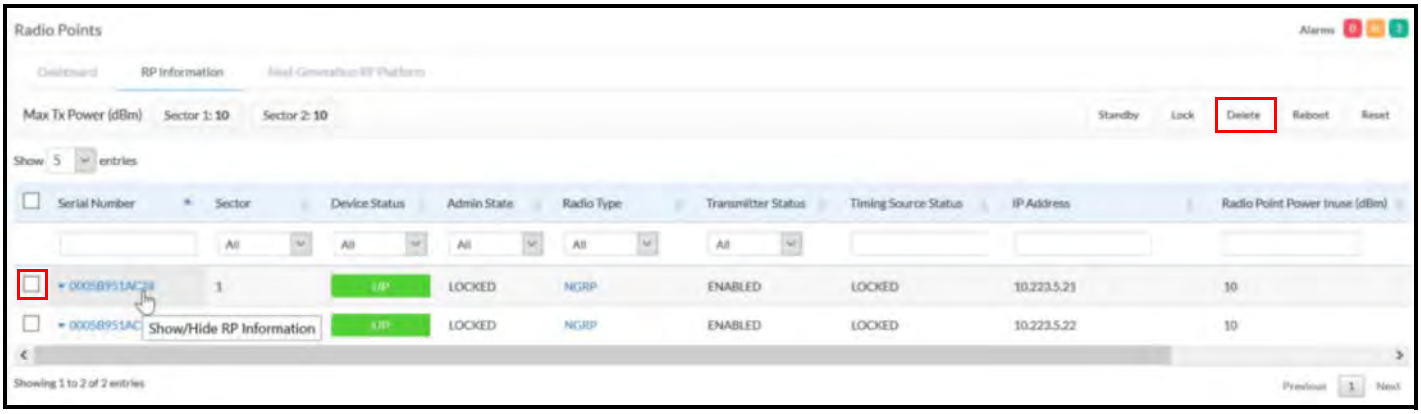

7 If one of the Radio Points is Down, select that RP by checking the box next to it.

8 Click **Delete**.

9 Check the Radio Point Information table to ensure the RP is deleted.

Replacing RP5100 series Radio Points

The following procedures provide instructions for replacing a OneCell Radio Point (RP) module in a live network environment.

- Replacing a ceiling RP5100i (above tile)
- Replacing a flown mounted RP5100i

DRAFT

- Replacing a pole mounted RP5100i
- RP post-replacement verification

Replacing a ceiling RP5100i (above tile)

1 Remove the ceiling tile next to the mounted RP to allow access to the mounting hardware and Ethernet cable.

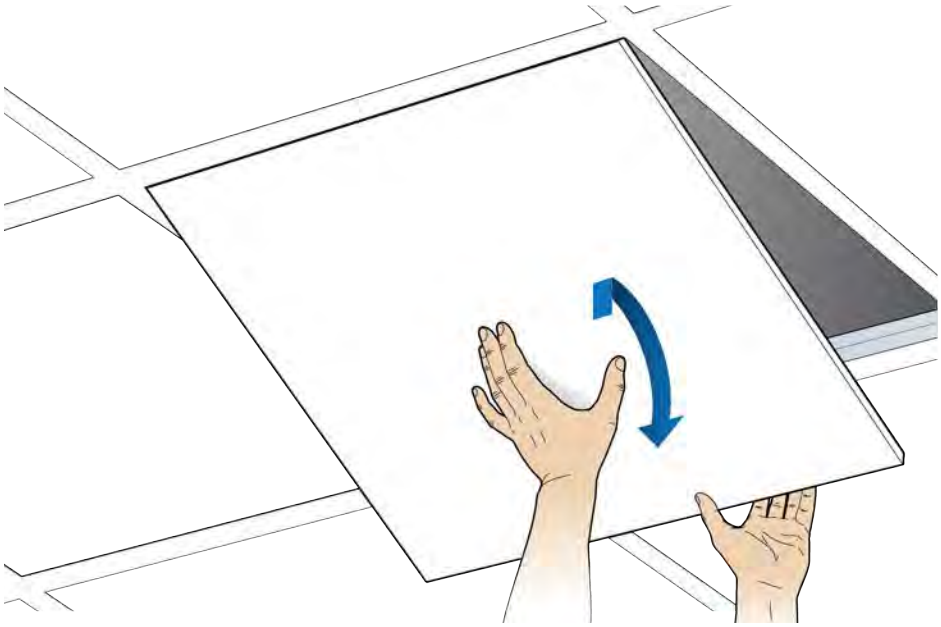

2 Remove the RP cover.

DRAFT

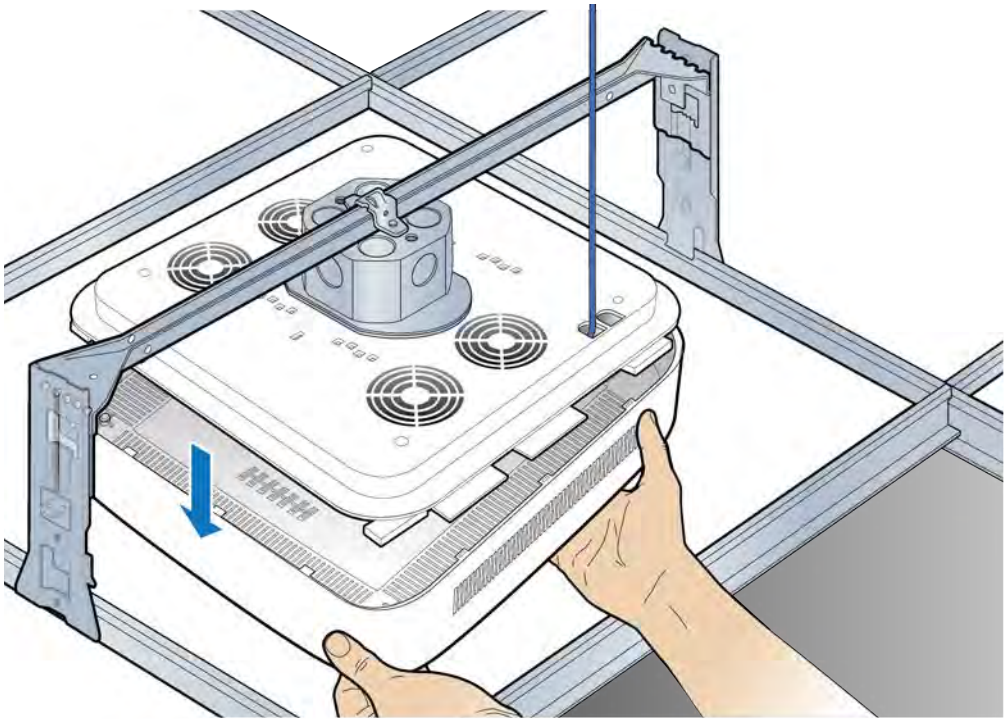

DRAFT

3 Disconnect the Ethernet cable.

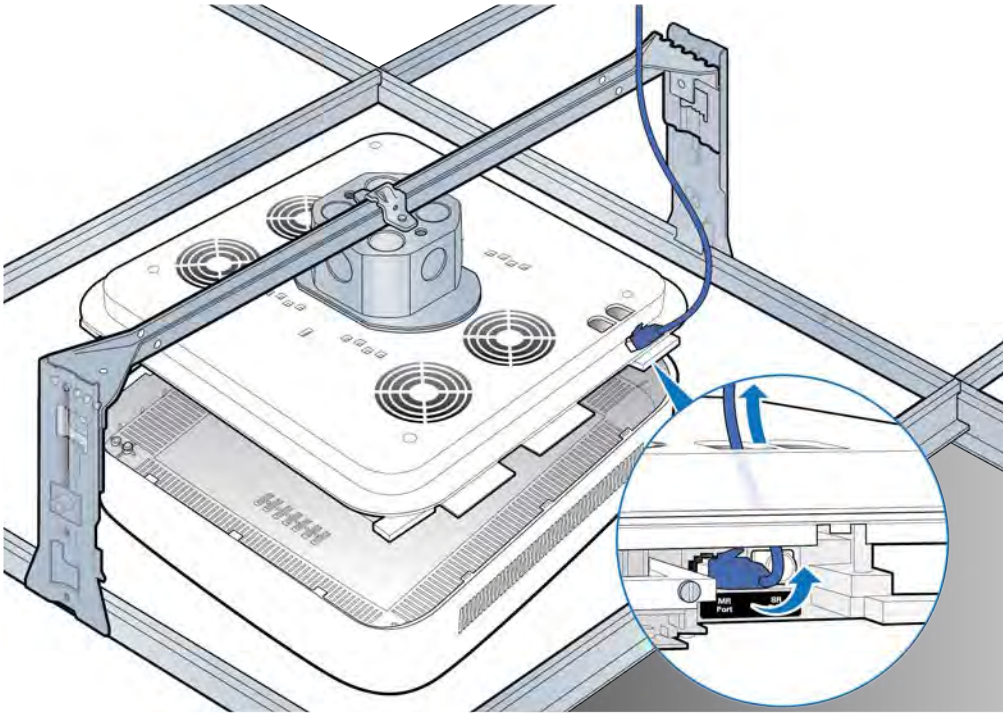

DRAFT

4 Replace the cover and twist the RP clockwise to remove it. Set the failed RP aside.

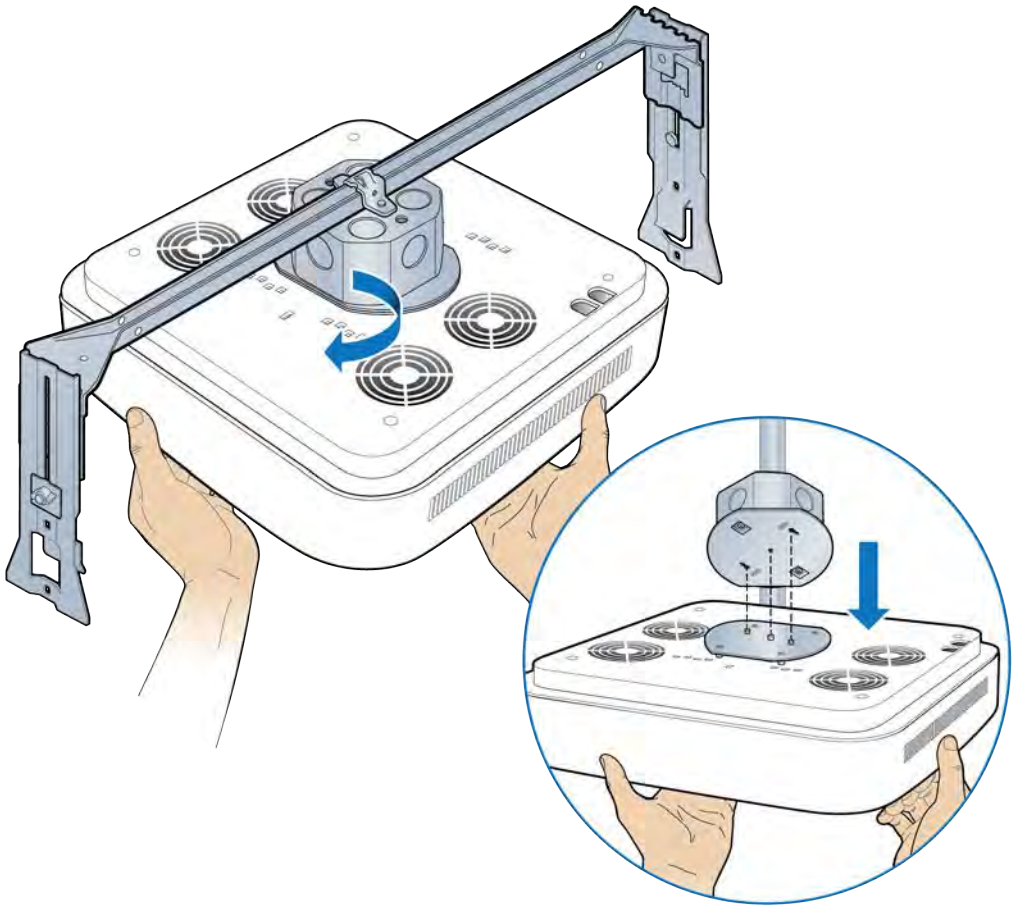

DRAFT

5 Attach the mounting plate to the replacement RP.

NOTE: Apply thread locking compound to the screws prior to installation.

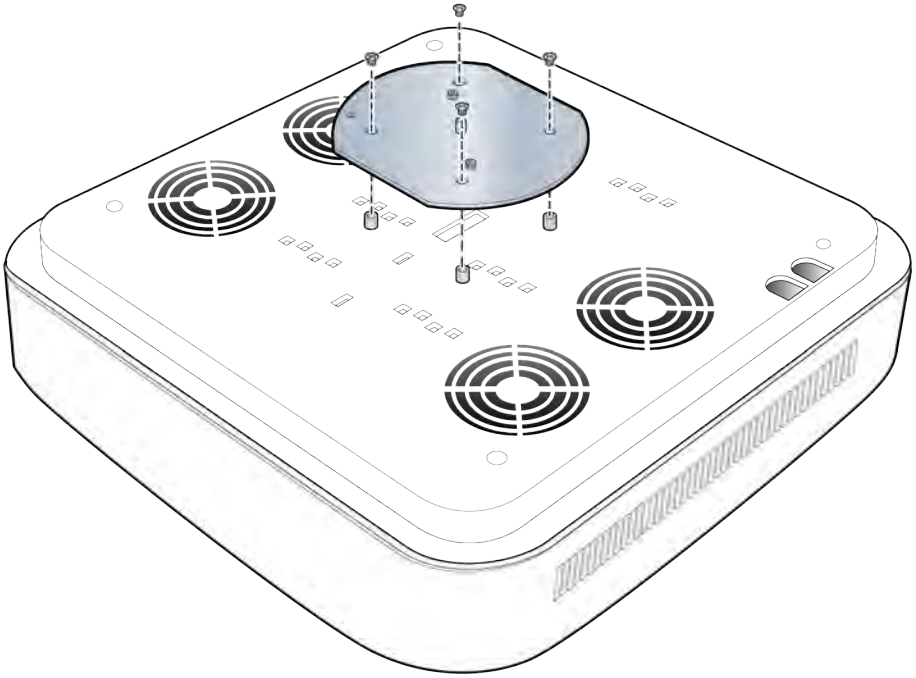

DRAFT

6 Attach the RP to the octagonal mounting plate and twist to engage.

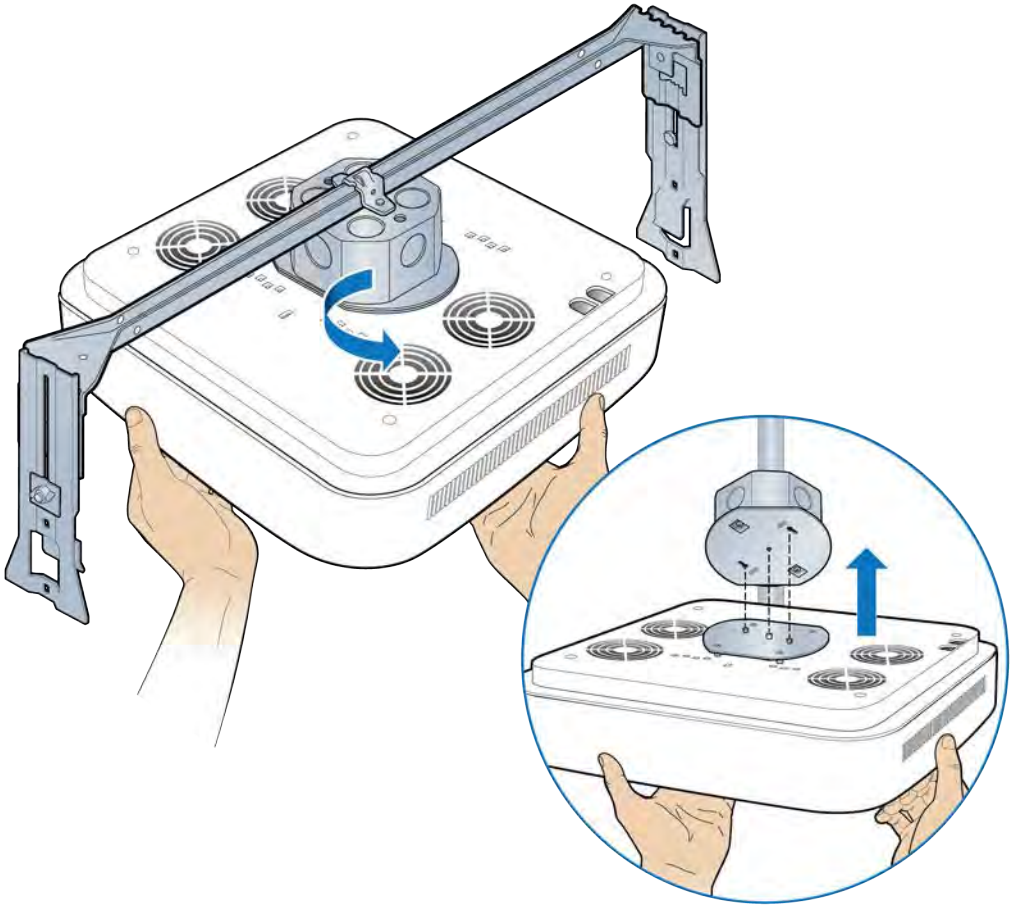

DRAFT

7 Remove the cover and connect the Ethernet cable to the MR port.

NOTE: The cover is attached to the RP with two lanyards.

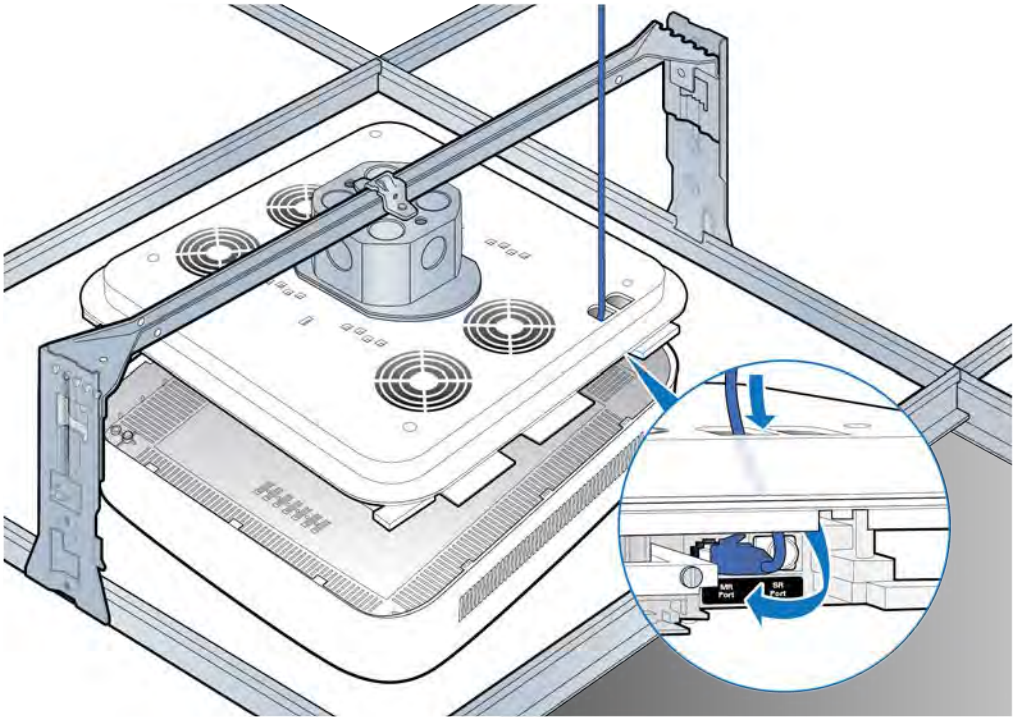

DRAFT

8 Attach the plastic cover to the RP.

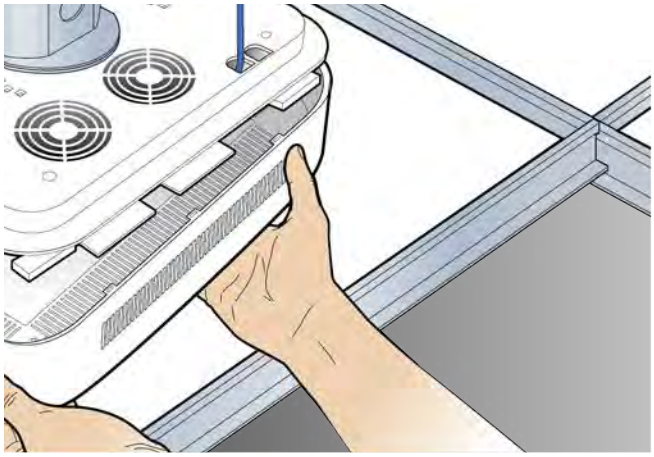

9 Replace the ceiling tile.

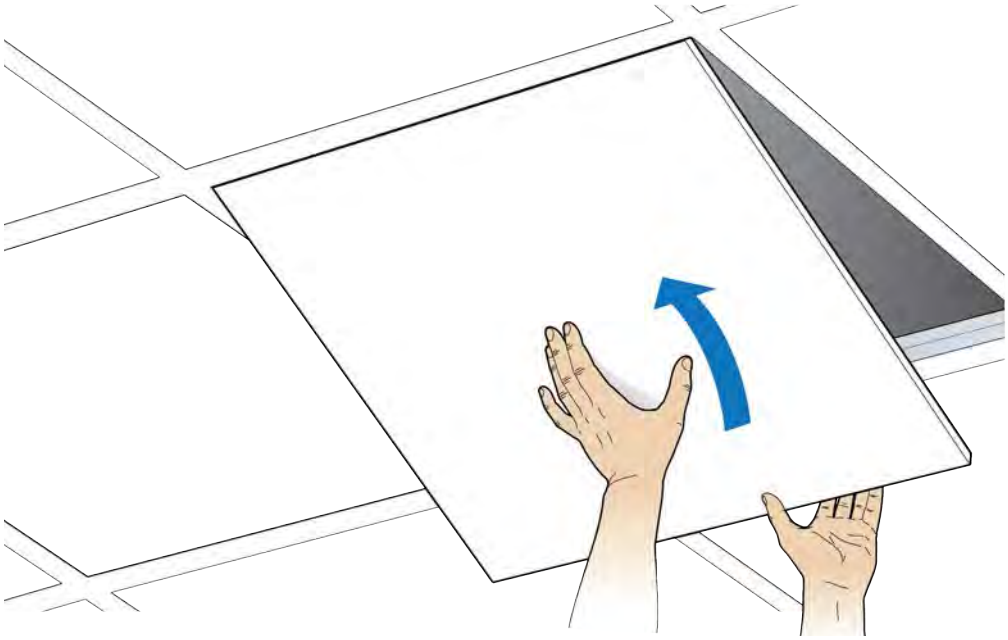

DRAFT

10 Verify the RP installation. See The operational state of the RP can be determined by the LED status on the RP. Additional information can be attained from the WebGUI status screens.

For verification procedures, see RP post-replacement verification.

Replacing a ceiling Indoor RP (on tile)

1 Remove the RP cover.

NOTE: The cover is attached to the RP with two lanyards.

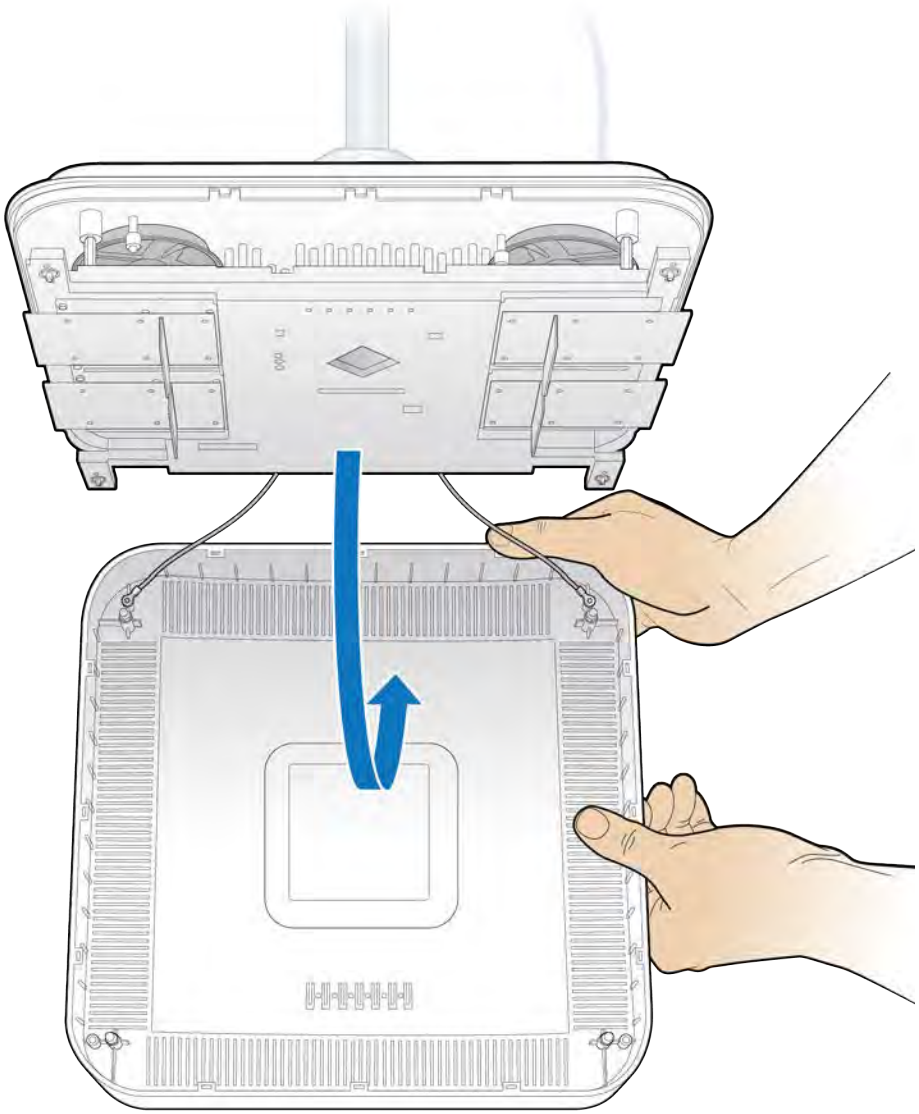

DRAFT

2 Disconnect the Ethernet cable from the RP.

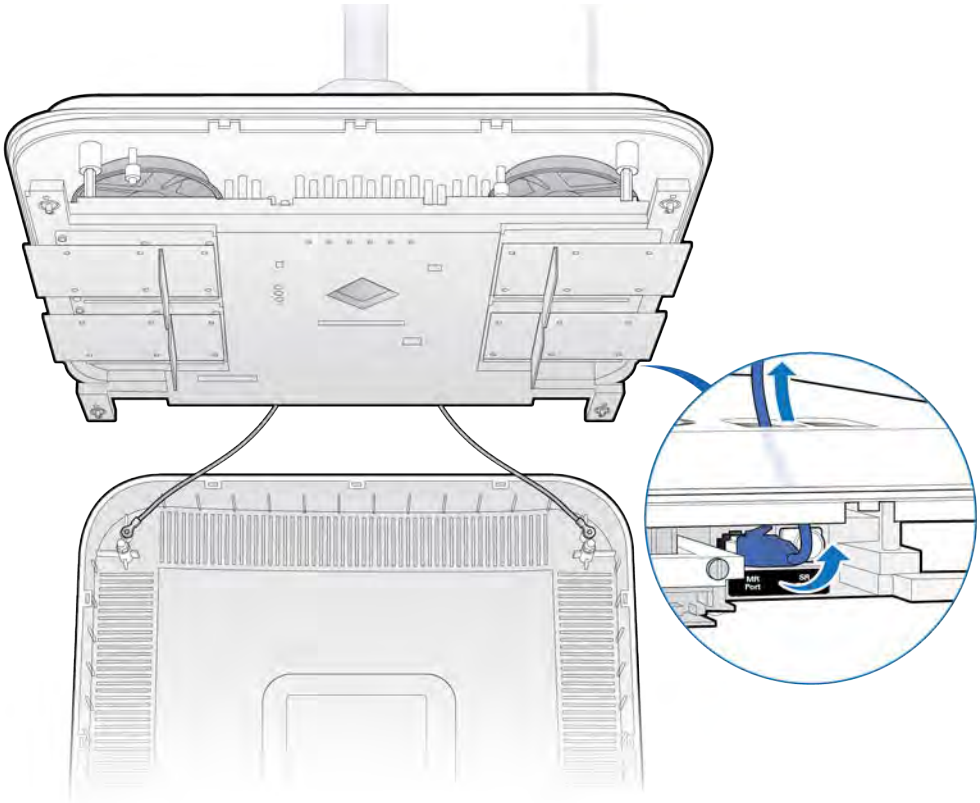

DRAFT

3 Replace the cover and twist the RP clockwise and remove the failed RP.

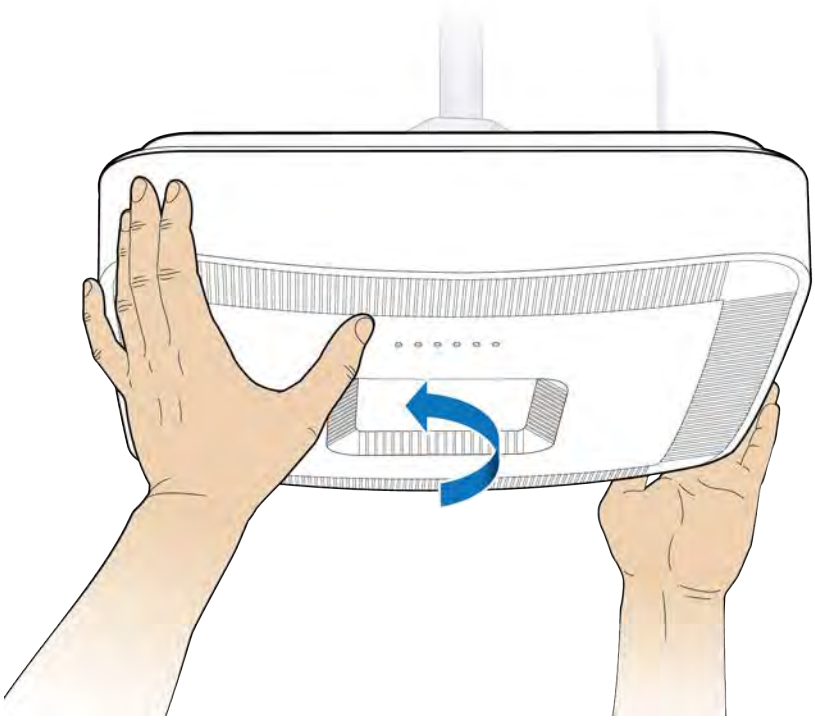

DRAFT

4 Attach the plate to the replacement RP.

NOTE: Apply thread locking compound to the screws prior to installation.

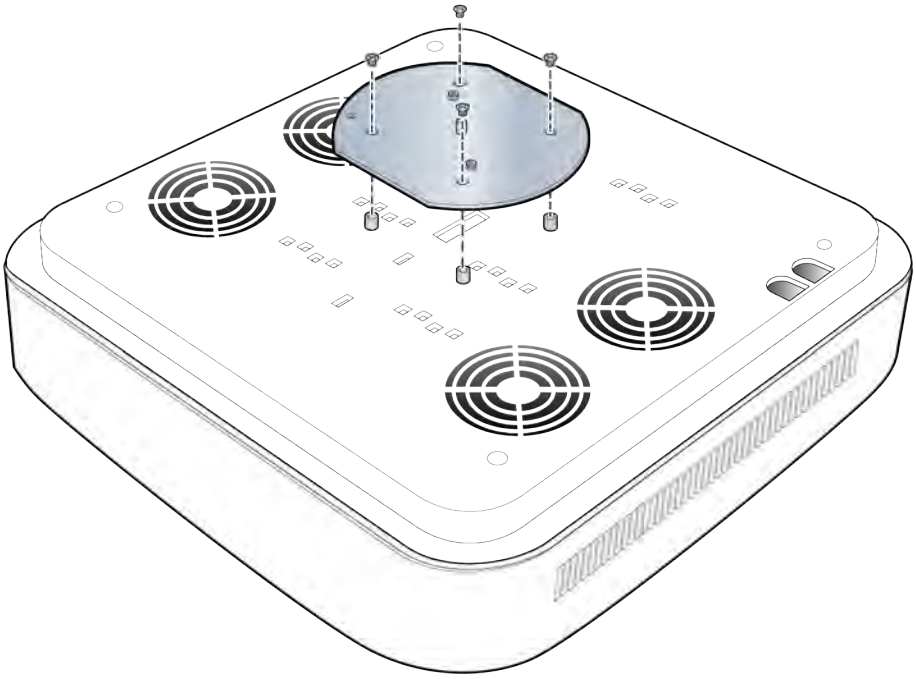

DRAFT

5 Attach the RP to the octagonal mounting plate.

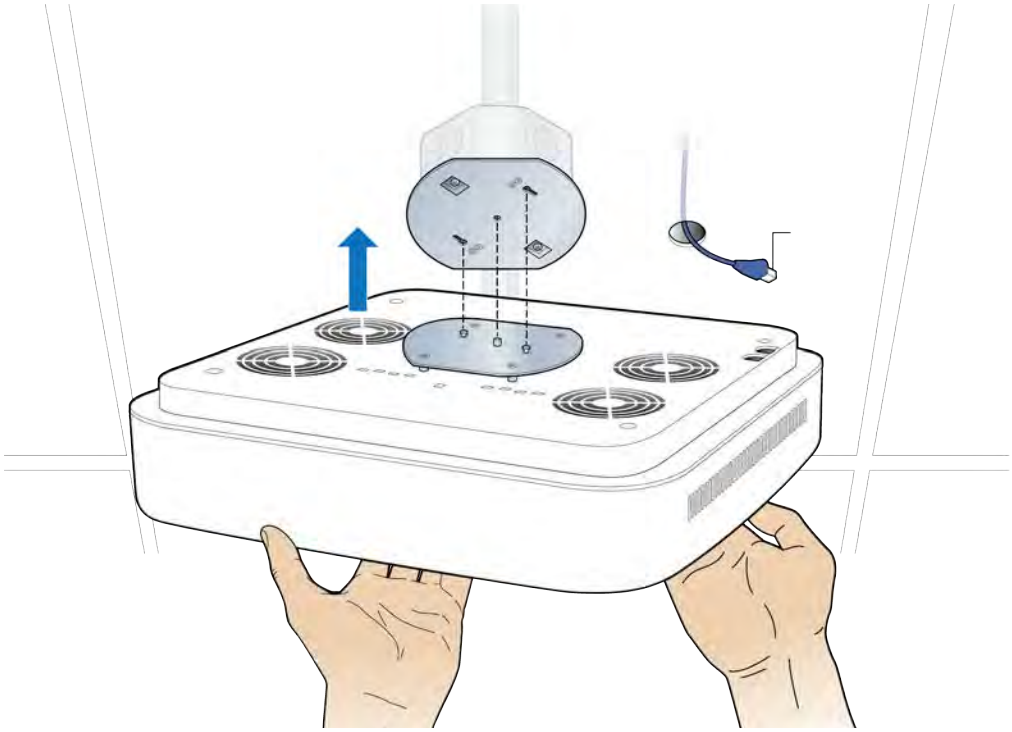

6 Secure the RP to the plate by twisting the RP counterclockwise.

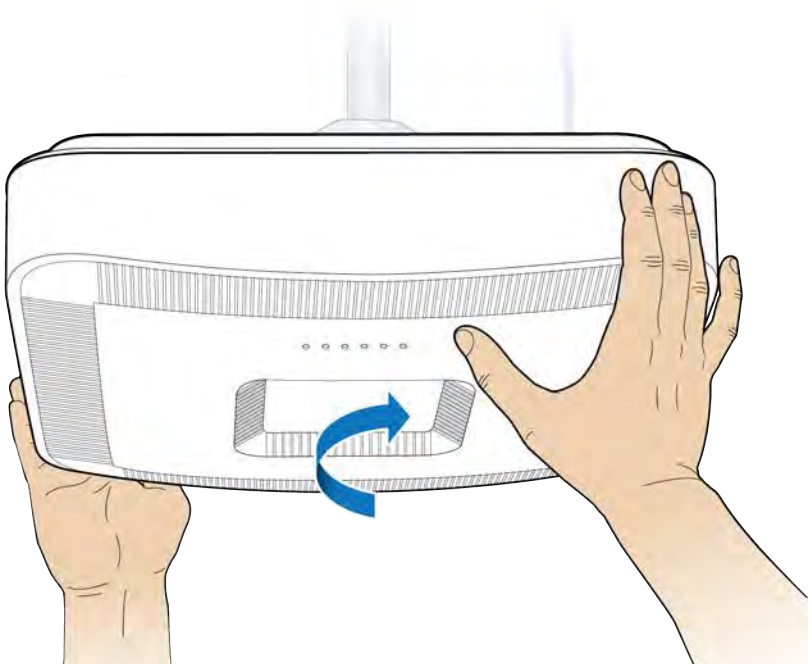

DRAFT

7 Remove the cover and connect the Ethernet cable to the MR port.

NOTE: The cover is attached to the RP with two lanyards.

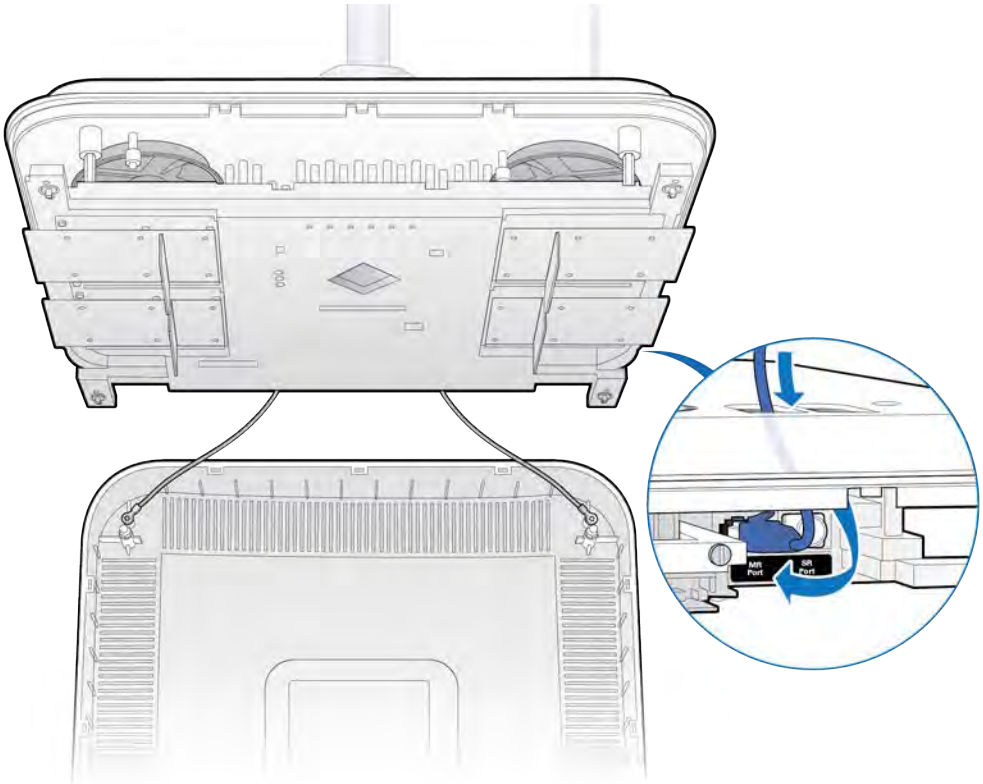

DRAFT

8 Attach the plastic cover to the Radio Point.

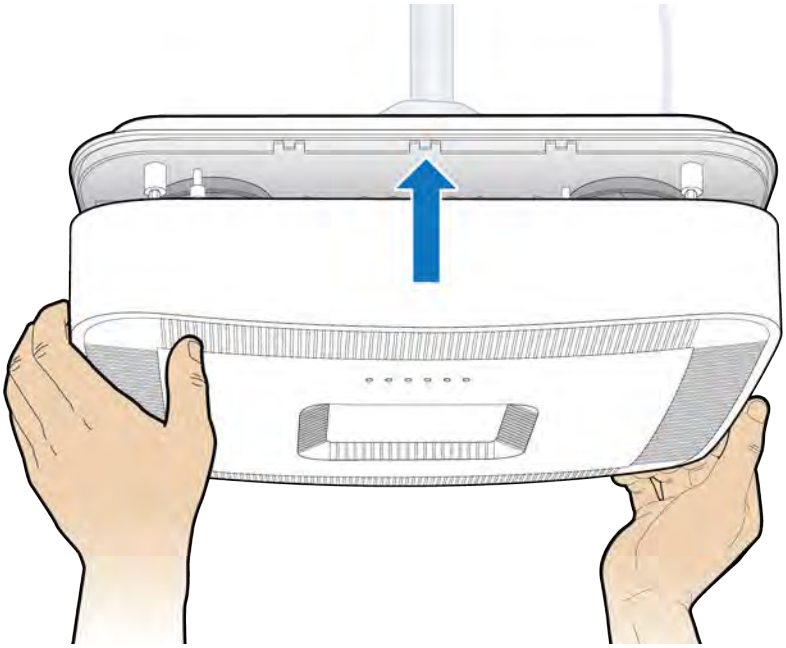

9 Verify the RP installation. See The operational state of the RP can be determined by the LED status on the RP. Additional information can be attained from the WebGUI status screens.

For verification procedures, see RP post-replacement verification.

DRAFT

Replacing a flown mounted RP5100i

1 Remove the RP cover.

NOTE: The cover is attached to the RP with two lanyards.

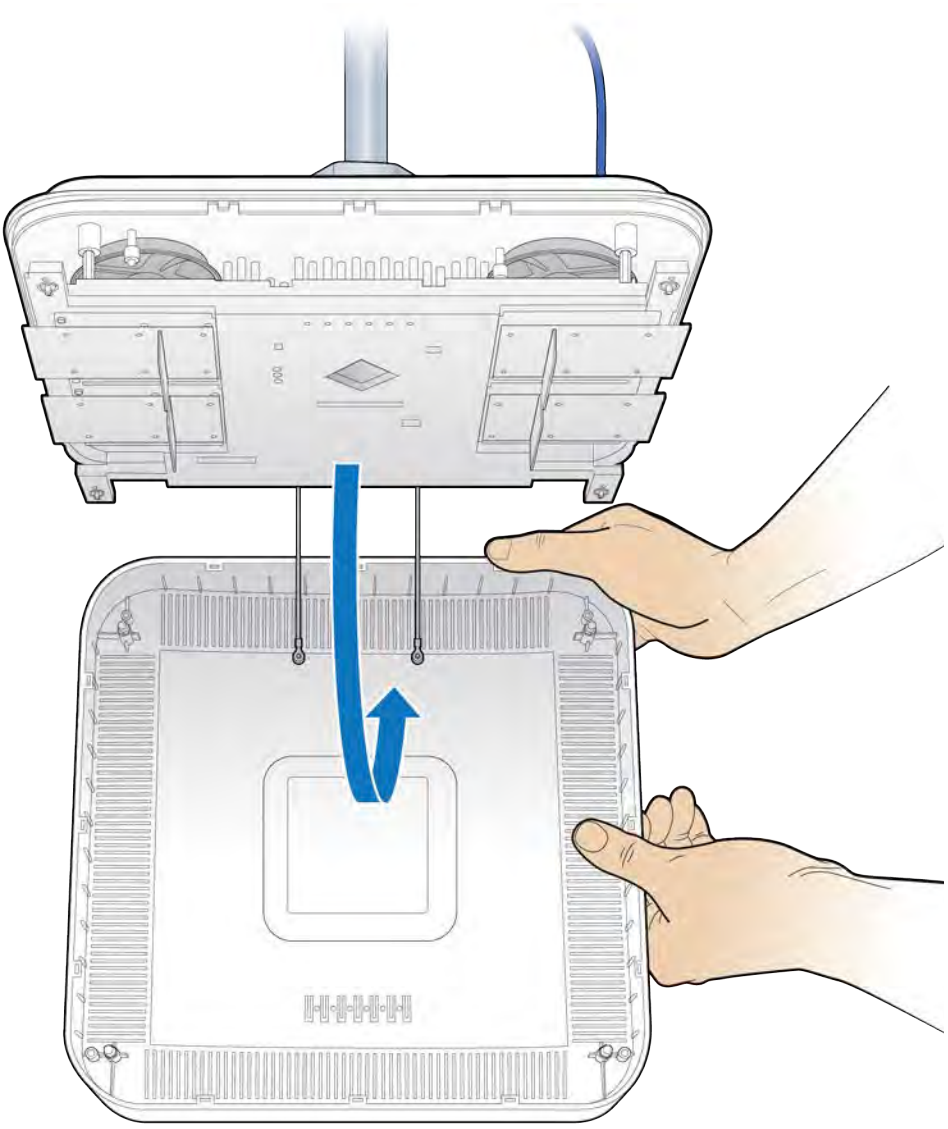

DRAFT

2 Disconnect the Ethernet cable.

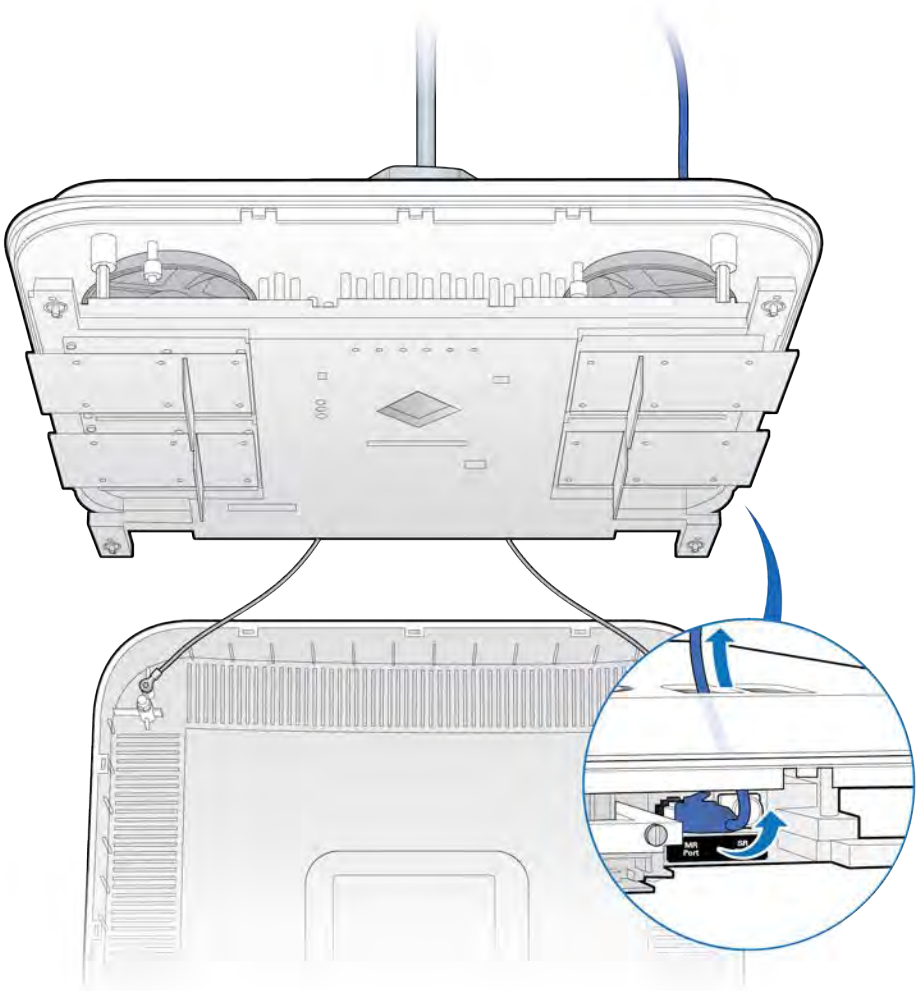

DRAFT

3 Replace the cover and twist the RP clockwise.

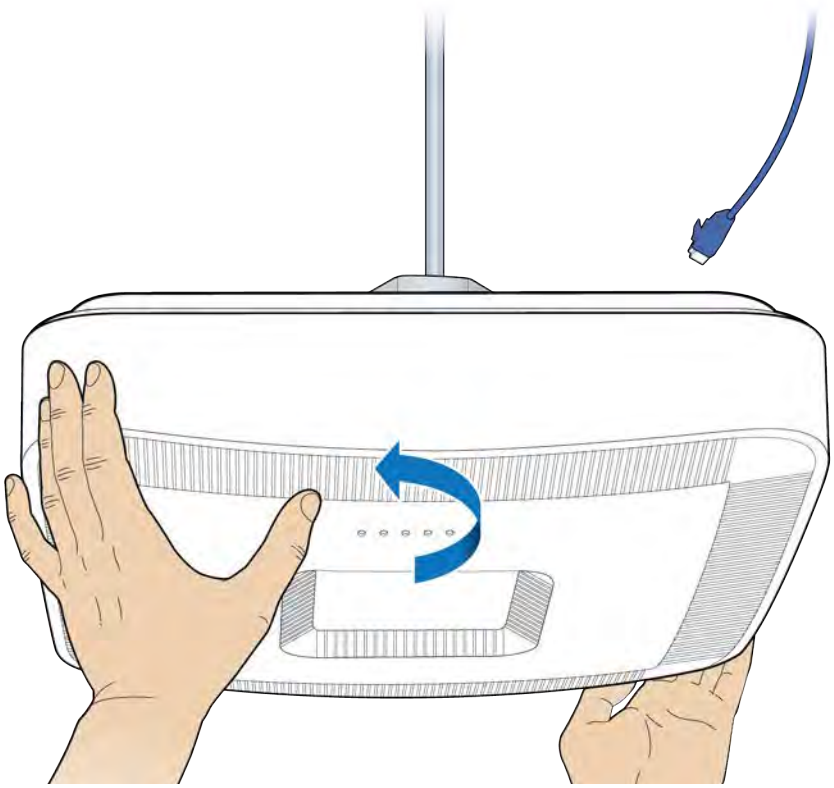

DRAFT

4 Remove the failed RP.

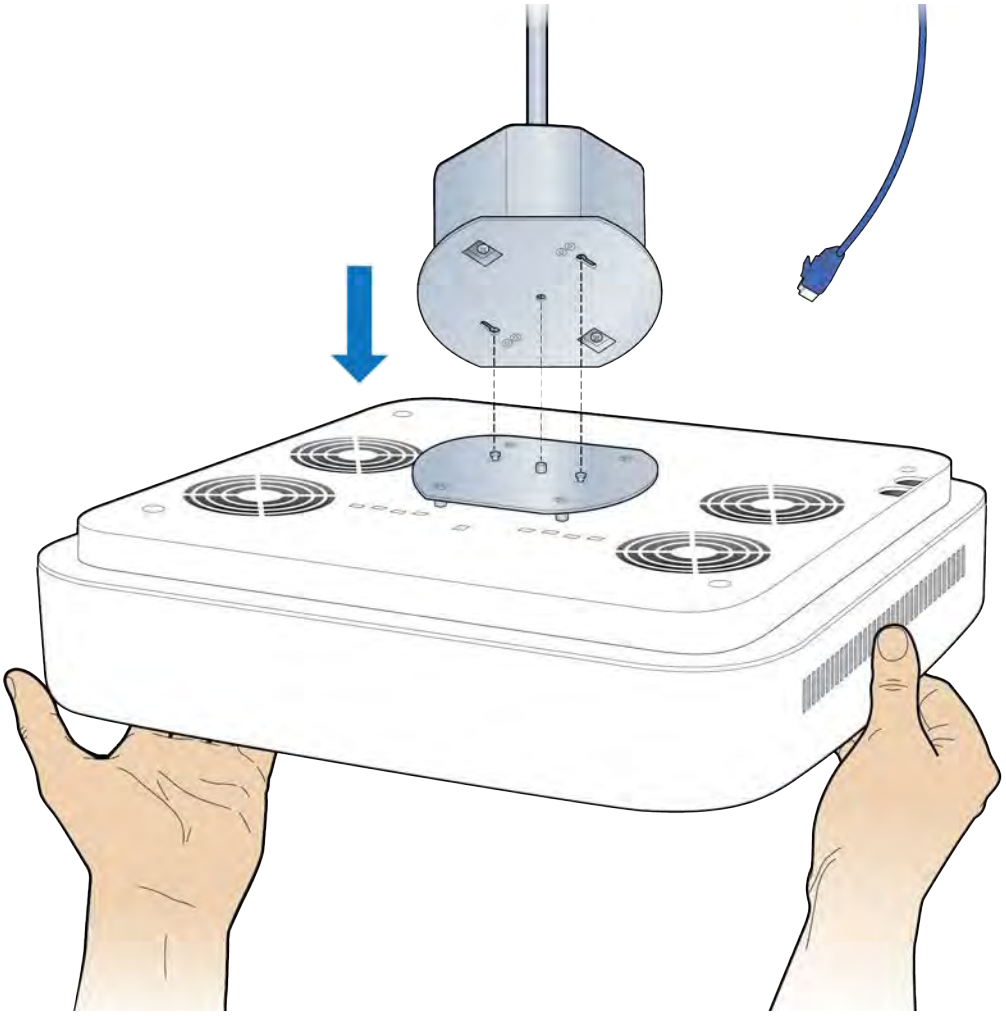

DRAFT

5 Attach the mounting plate to the RP.

NOTE: Apply thread locking compound to the screws prior to installation.

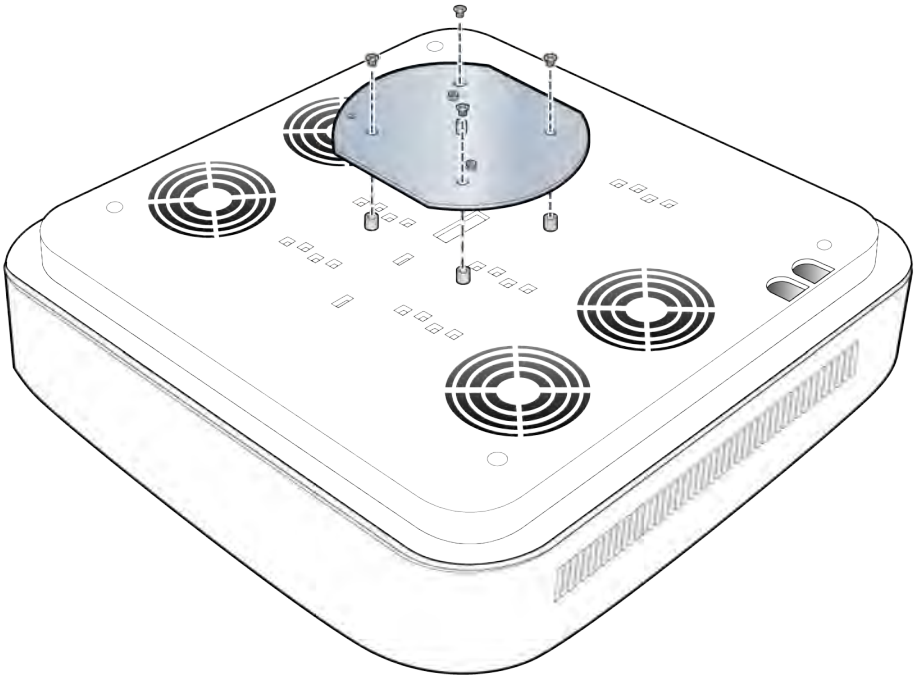

DRAFT

6 Attach the RP to the octagon box.

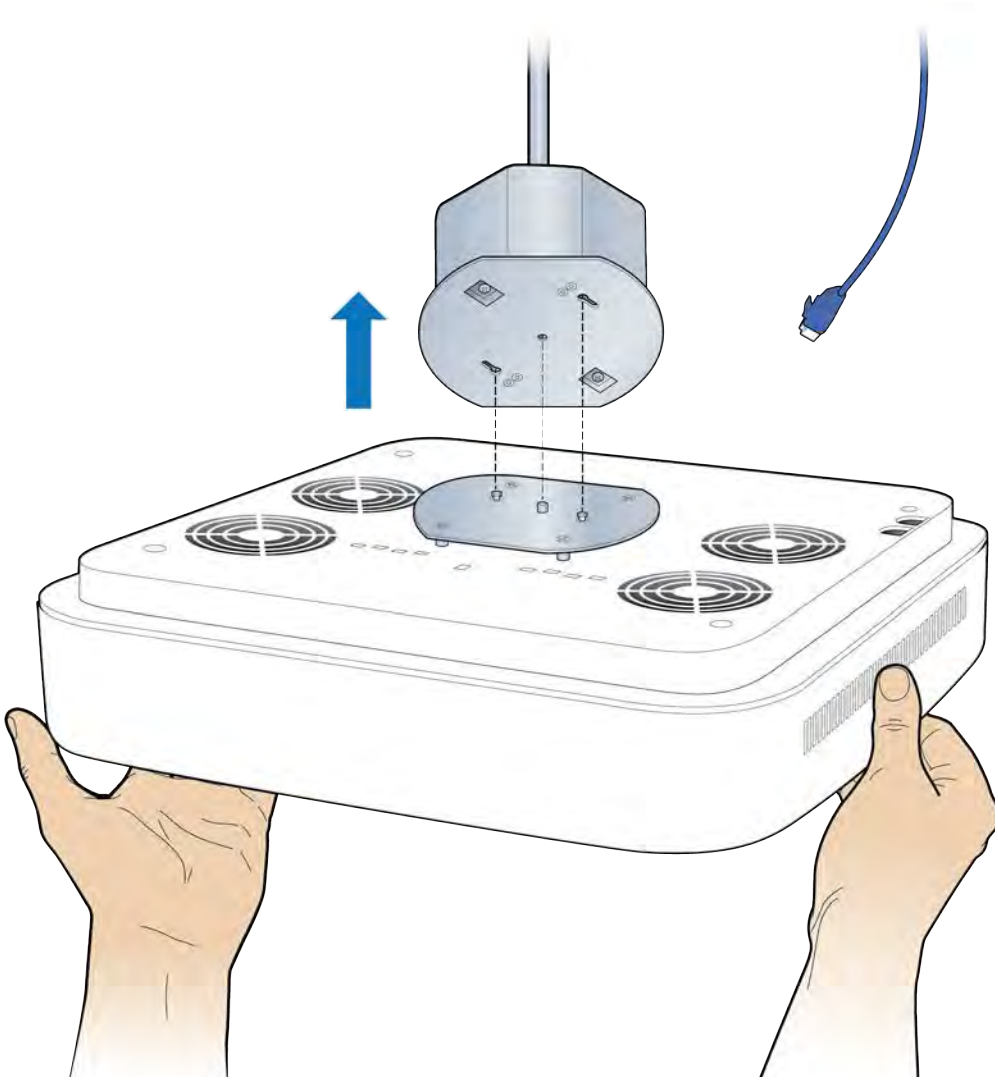

DRAFT

7 Twist the RP counterclockwise.

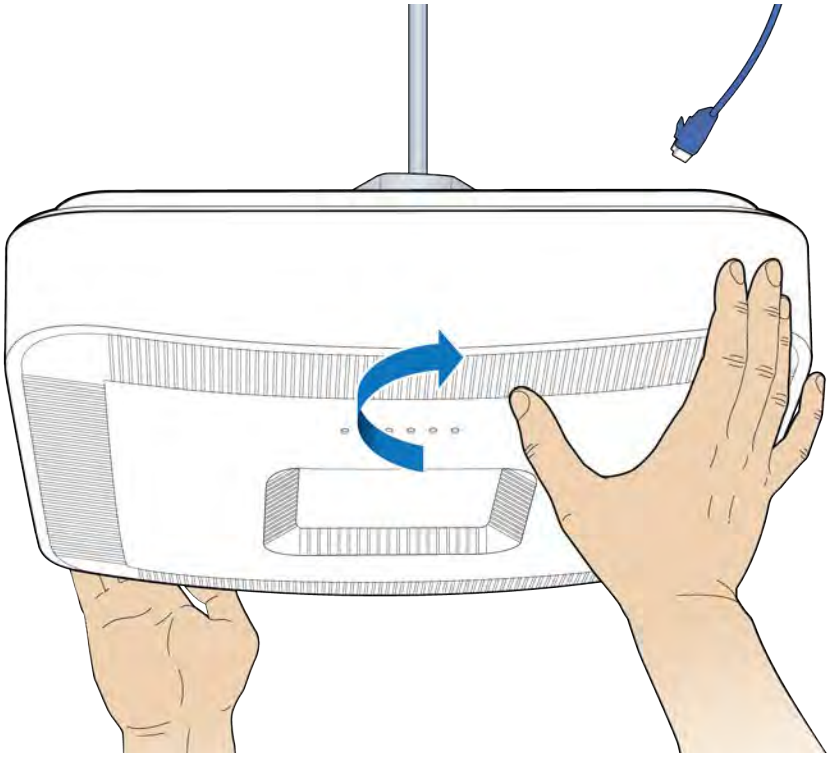

DRAFT

8 Remove the RP cover.

NOTE: The cover is attached to the RP with two lanyards.

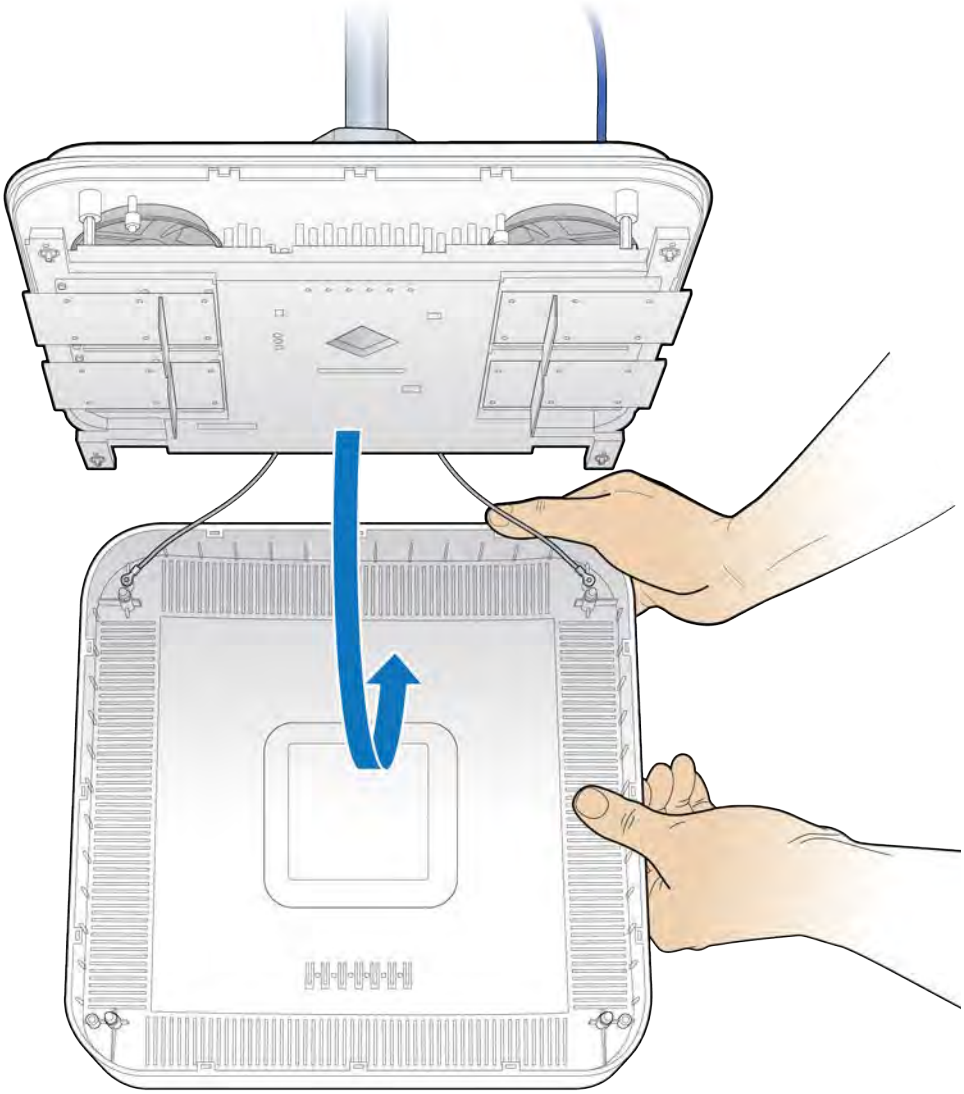

DRAFT

9 Connect the Ethernet cable to the MR port.

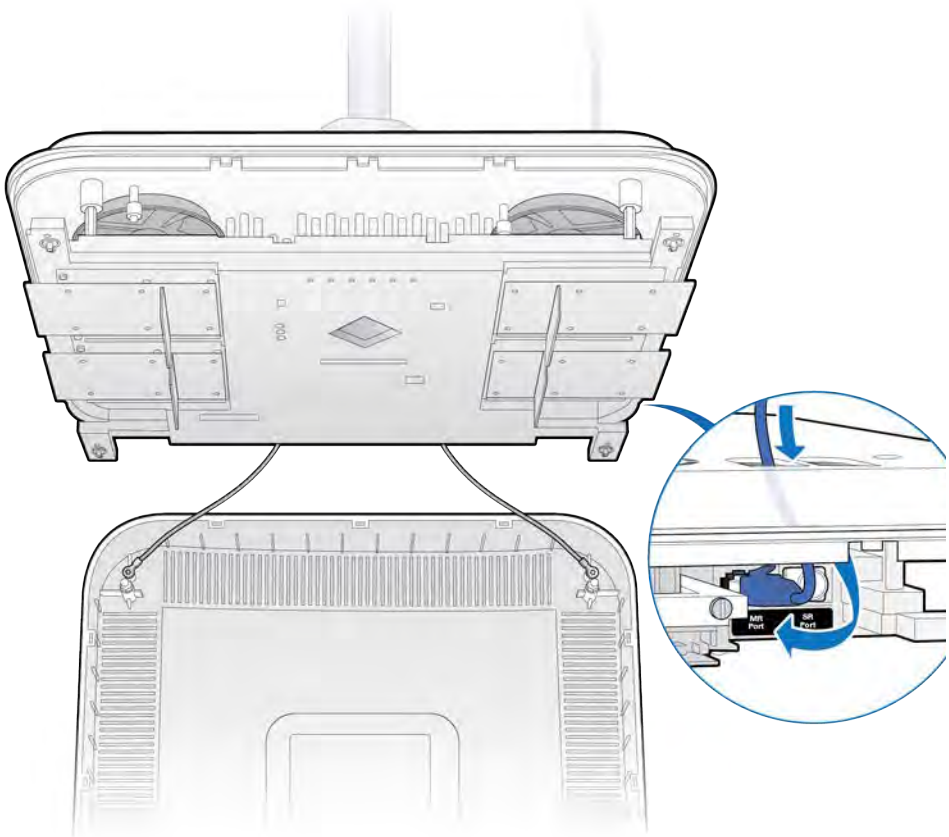

DRAFT

10 Replace the RP cover.

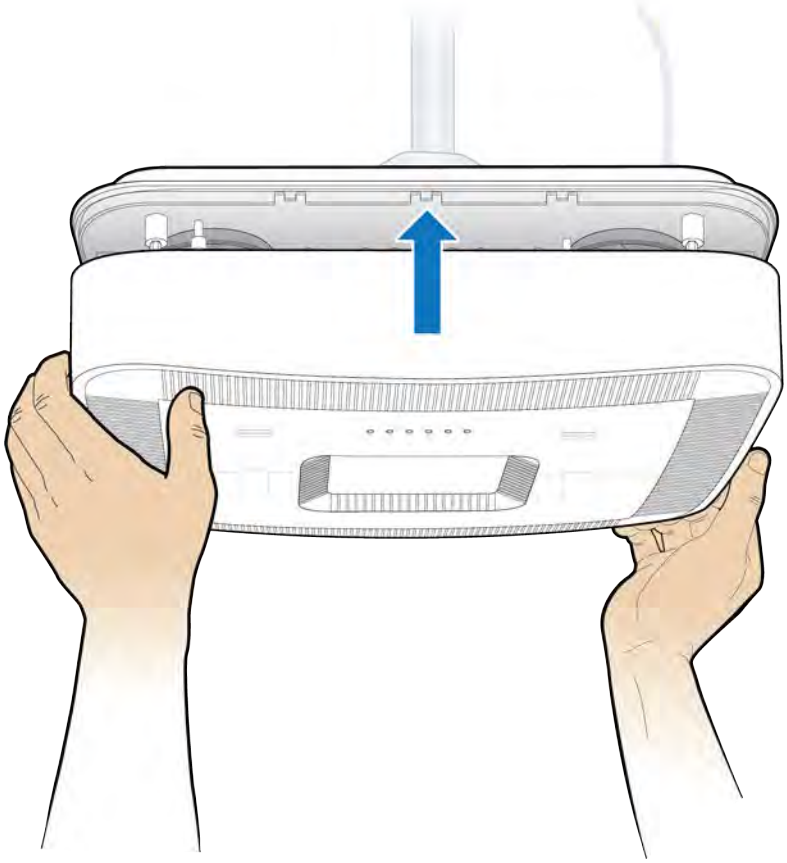

11 Verify the RP installation. See The operational state of the RP can be determined by the LED status on the RP. Additional information can be attained from the WebGUI status screens.

For verification procedures, see RP post-replacement verification.

DRAFT

Replacing a pole mounted RP5100i

1 Remove the RP cover.

NOTE: The cover is attached to the RP with two lanyards.

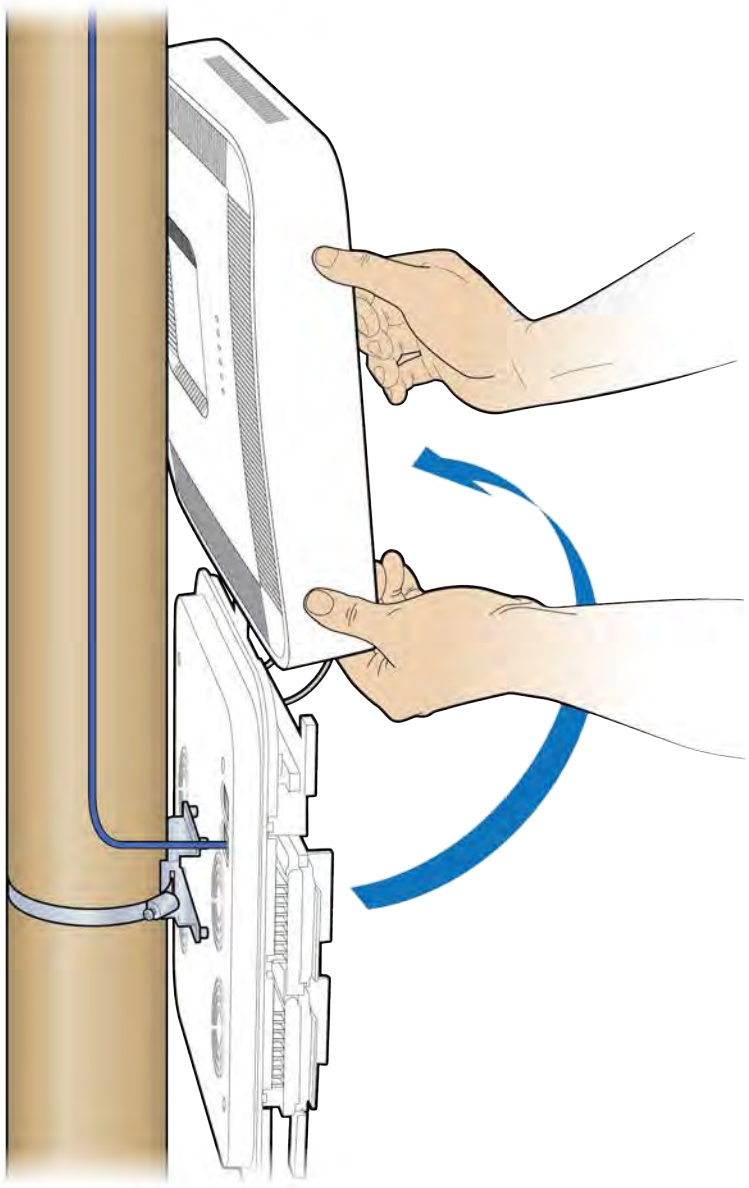

DRAFT

2 Disconnect the Ethernet cable.

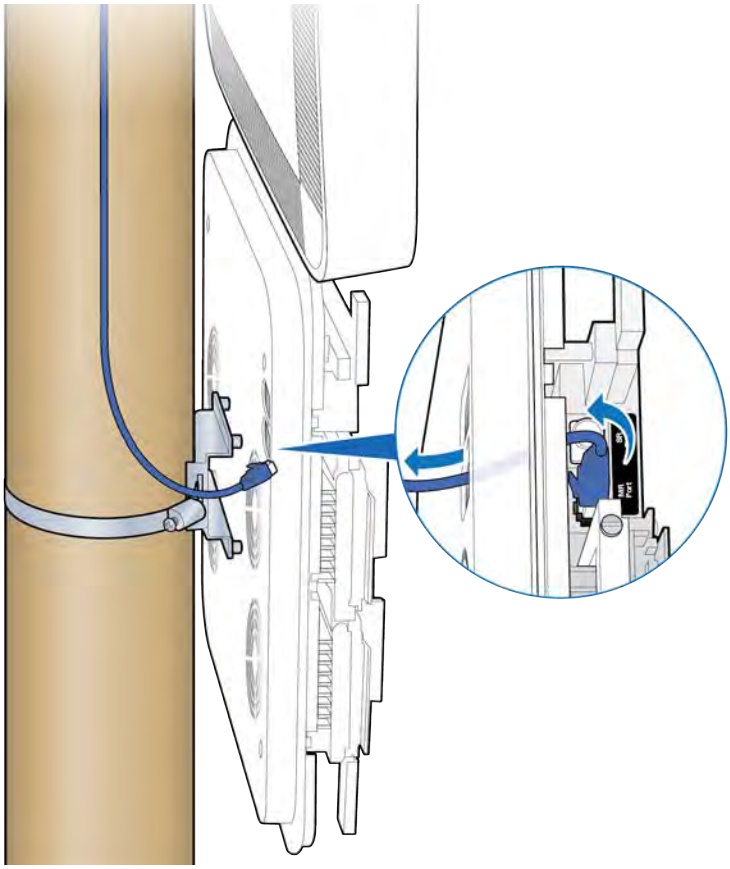

DRAFT

3 Loosen the clamp and remove the RP.

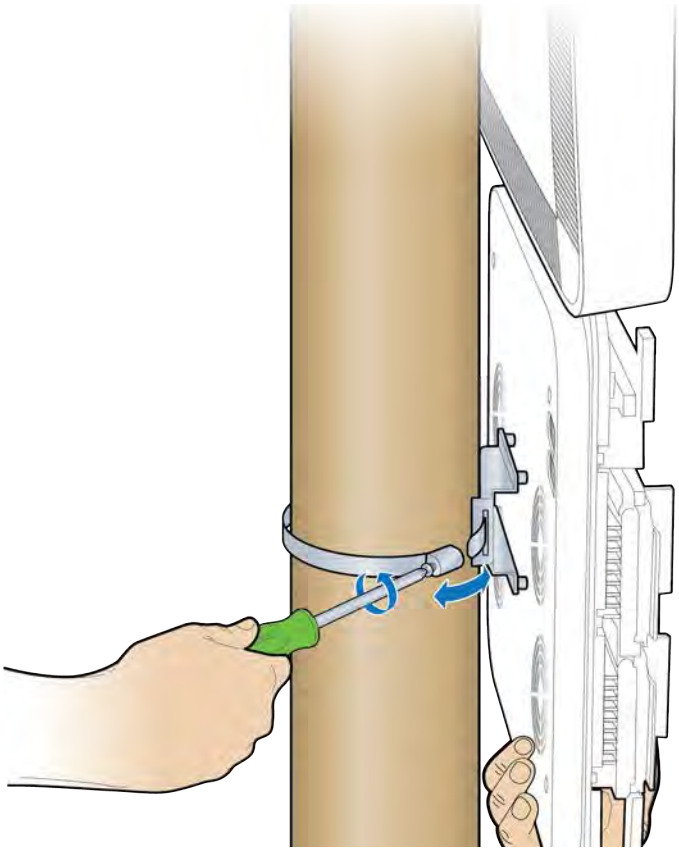

4 Attach the bracket to the replacement RP.

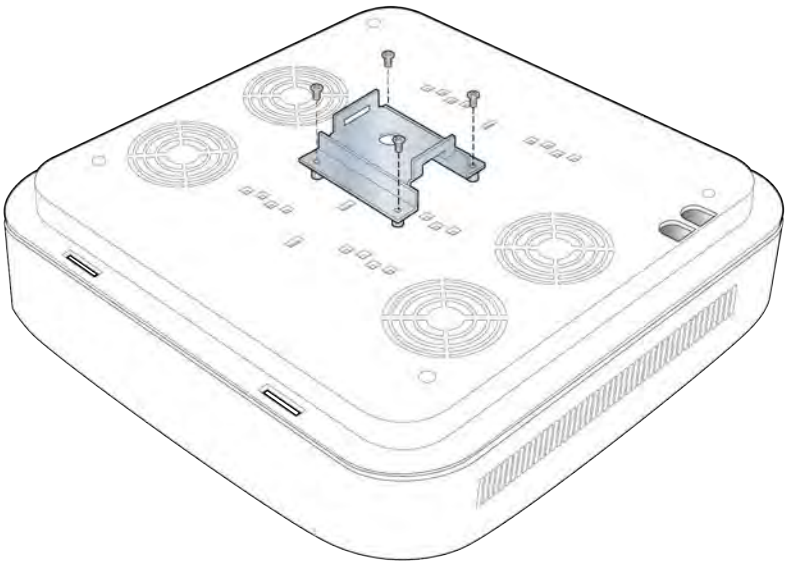

DRAFT

5 Attach the replacement RP to the pole using the clamp.

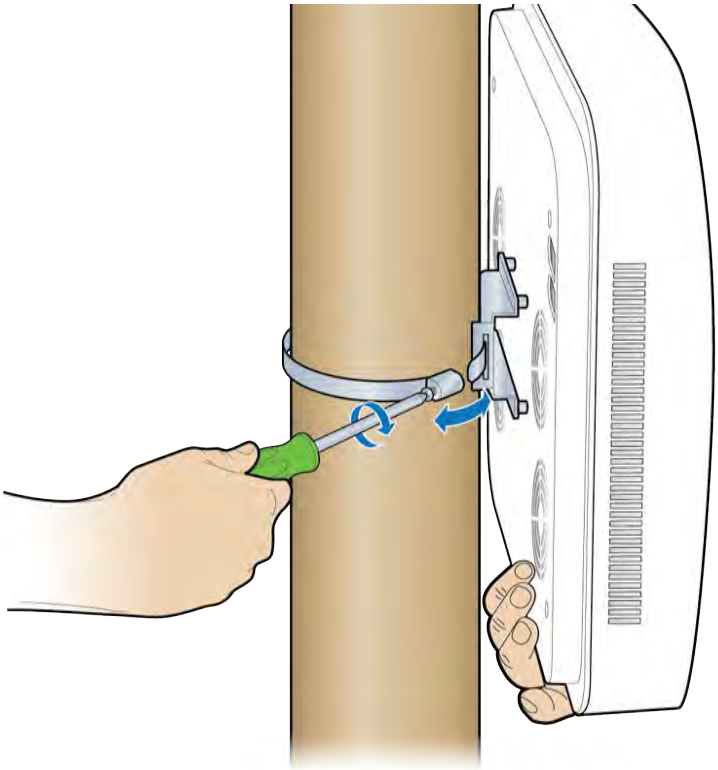

DRAFT

6 Remove the cover and connect the Ethernet cable to the RP.

NOTE: The cover is attached to the RP with two lanyards.

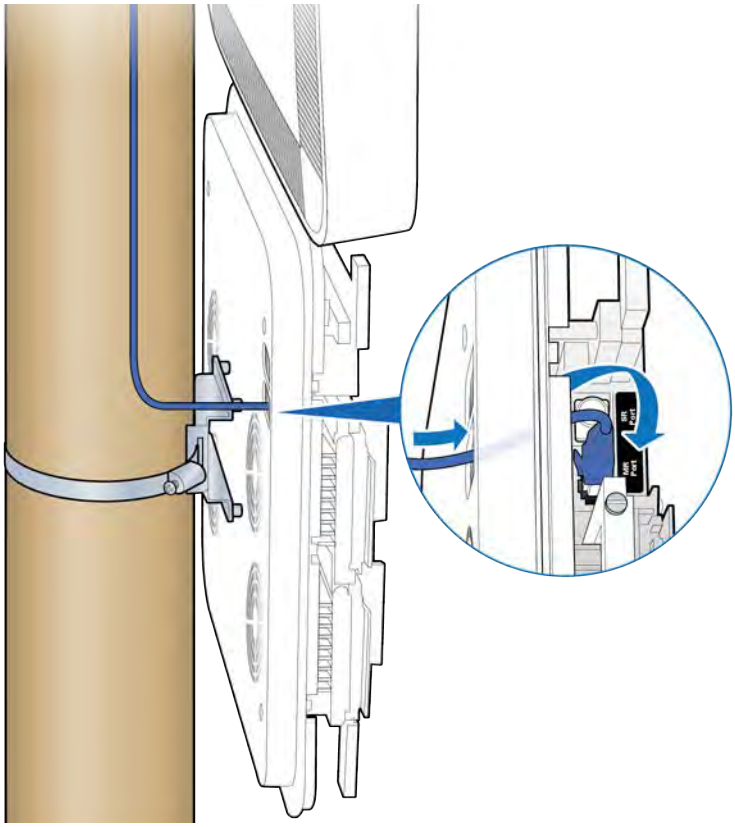

DRAFT

7 Replace the cover on the RP.

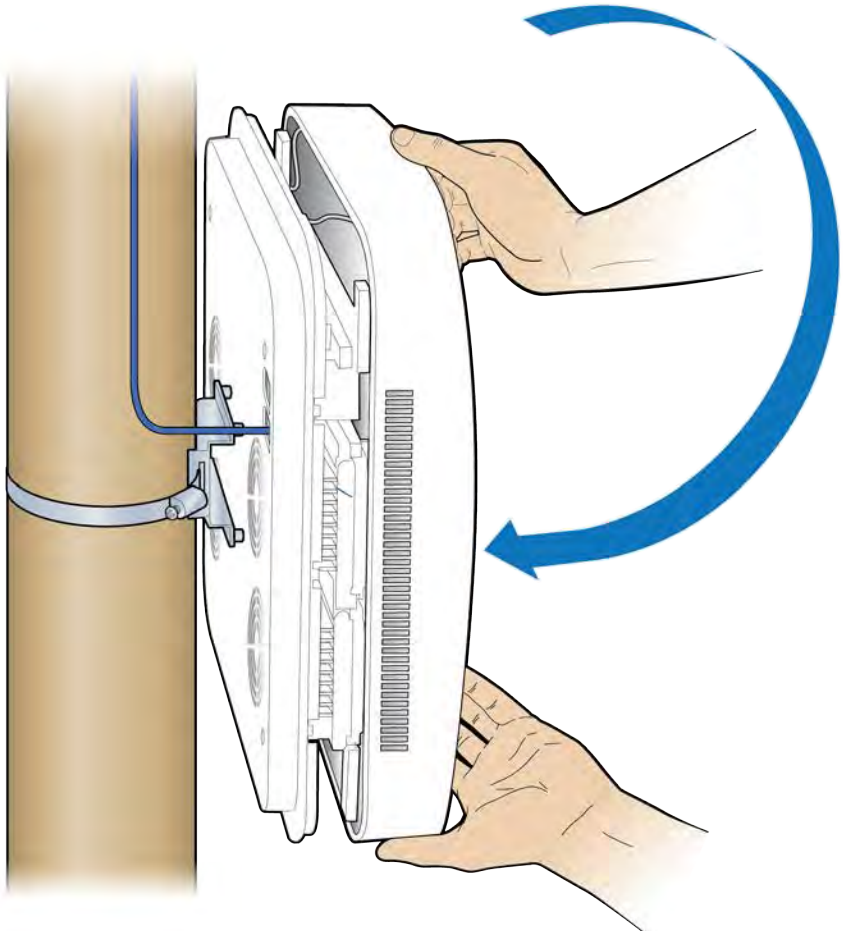

8 Verify the RP installation. The operational state of the RP can be determined by the LED status on the RP. Additional information can be attained from the WebGUI status screens.

For verification procedures, see RP post-replacement verification.

Replacing RP5100i RF modules

The following procedures provide instructions for replacing a OneCell Radio Point RF module.

WARNING

Disconnect the Ethernet cable(s) on the RP to remove the power. Failure to do so will cause damage the RP.

DRAFT

1 Remove the RP cover.

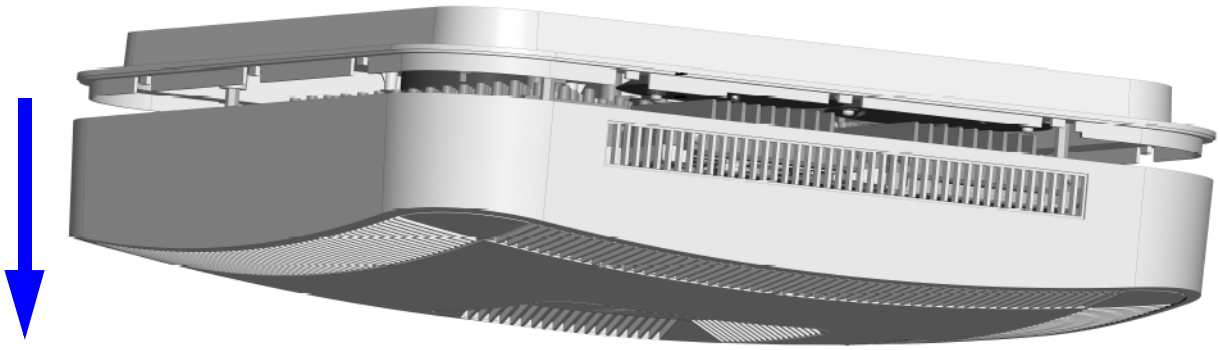

2 Disconnect the Ethernet cable on the RP.

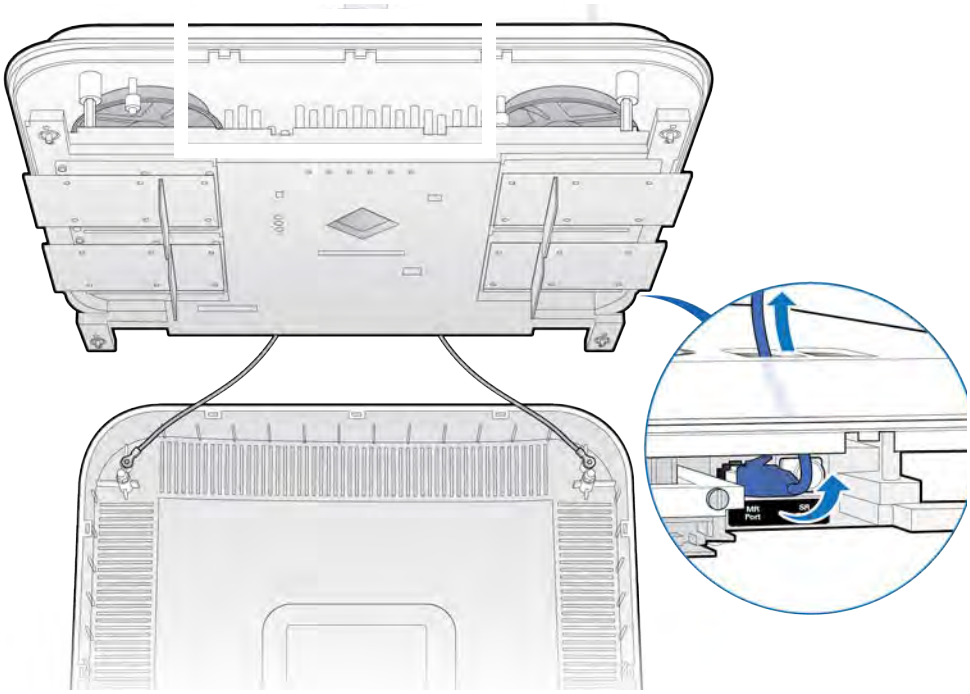

3 Unscrew the RF module.

DRAFT

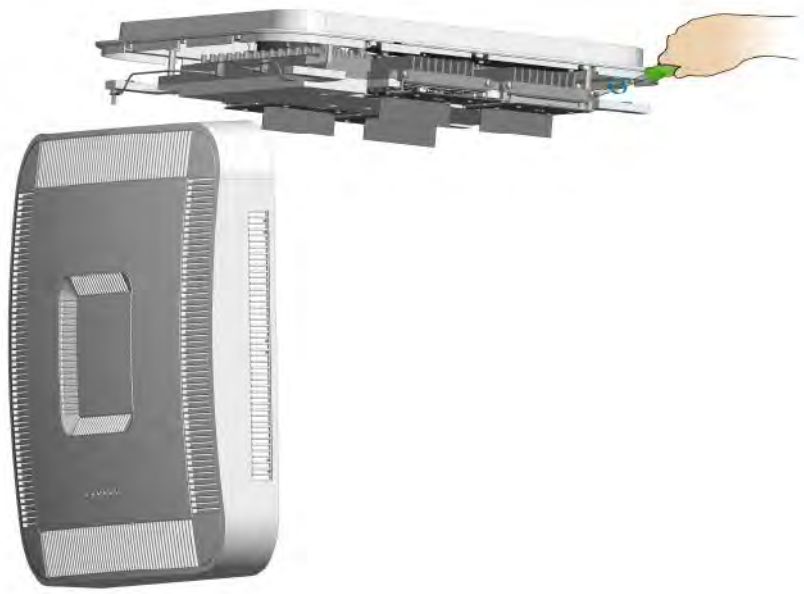

4 Remove the RF module.

5 Install the replacement RF module.

DRAFT

6 Secure it in the slot.

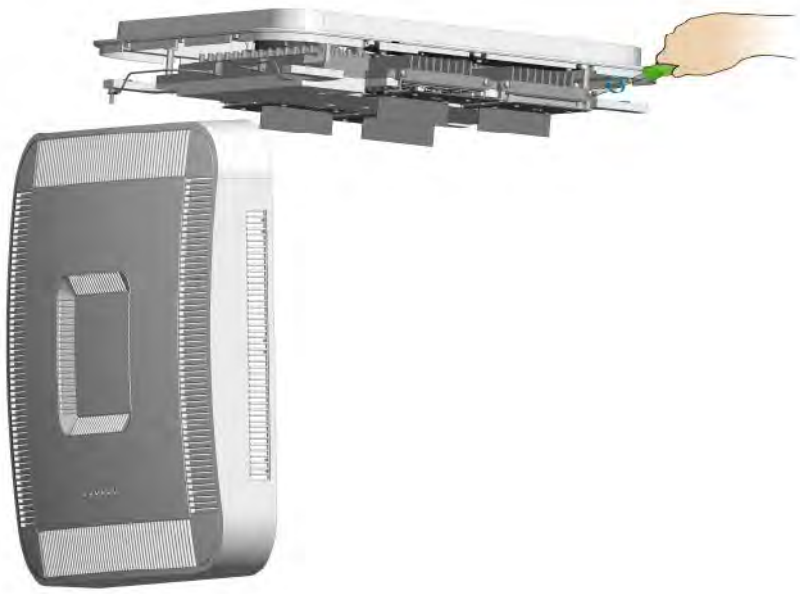

7 Connect the Ethernet cable.

DRAFT

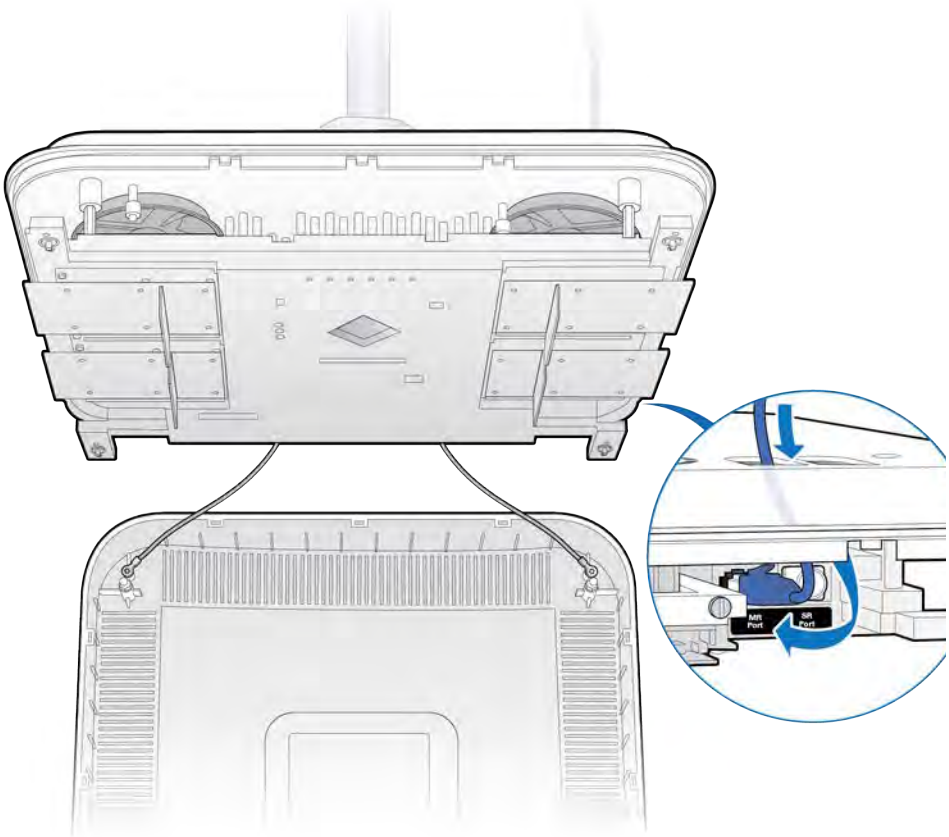

DRAFT

8 Attach the RP cover.

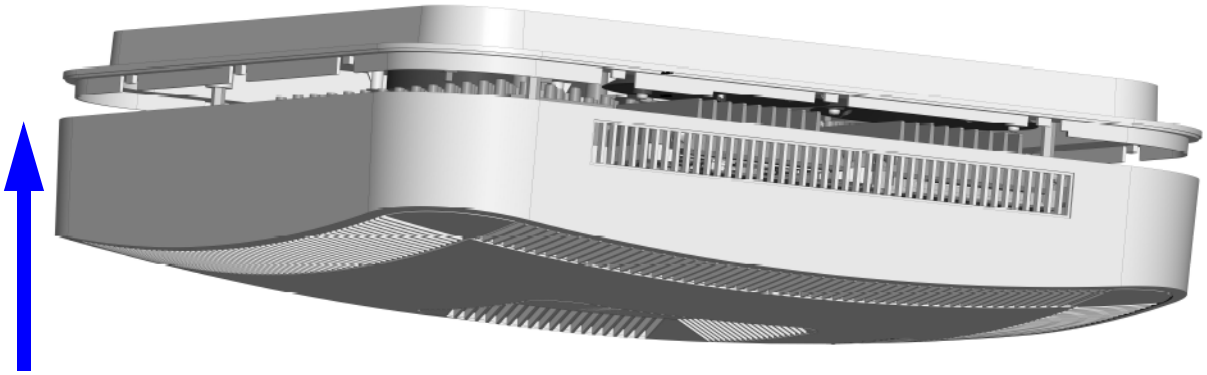

9 Verify the RF module installation. The operational state of the RF module can be determined by the LED status on the RP. Additional information can be attained from the WebGUI status screens.

For verification procedures, see RP post-replacement verification.

Replacing RP2000 series Radio Points

This procedure provides instructions for replacing a OneCell RP2000 series Radio Point in a live network environment.

Replacing a ceiling Indoor RP (above tile)

1 Remove the ceiling tile below the mounted RP to allow access to the mounting hardware and Ethernet cable.

DRAFT

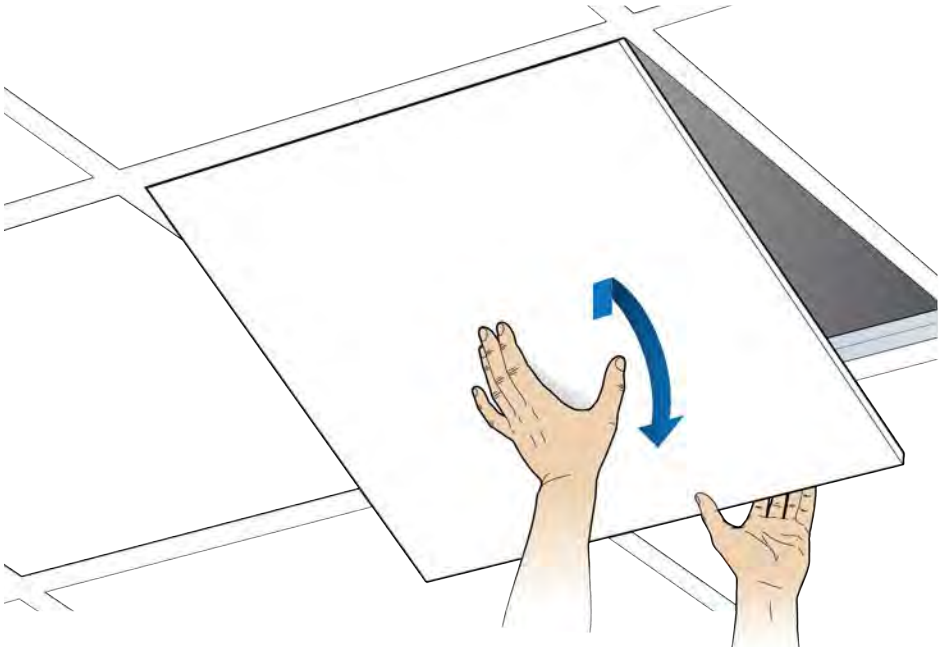

2 Loosen the locking screw.

NOTE: The locking screw is not on newer RP2000s.

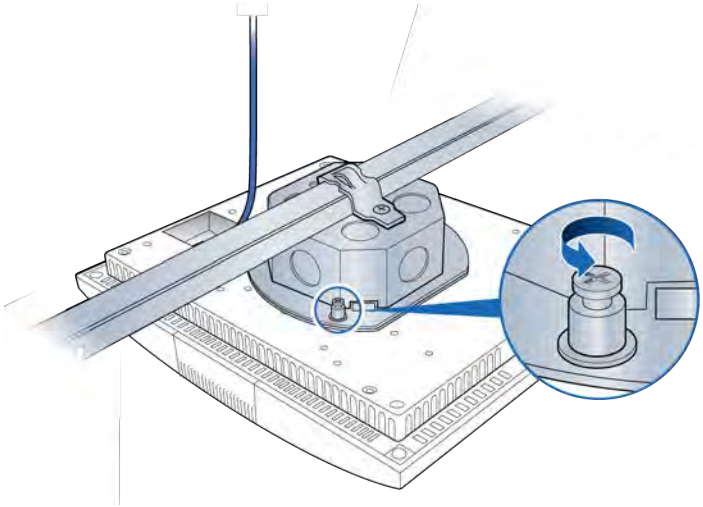

3 Disconnect the Ethernet cable.

DRAFT

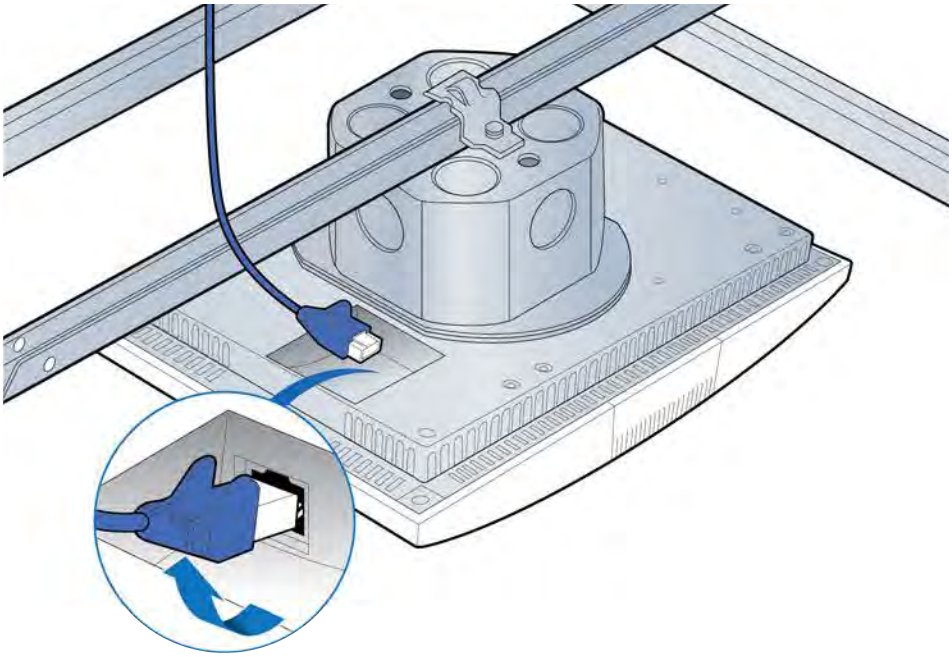

4 Twist the RP to remove it.

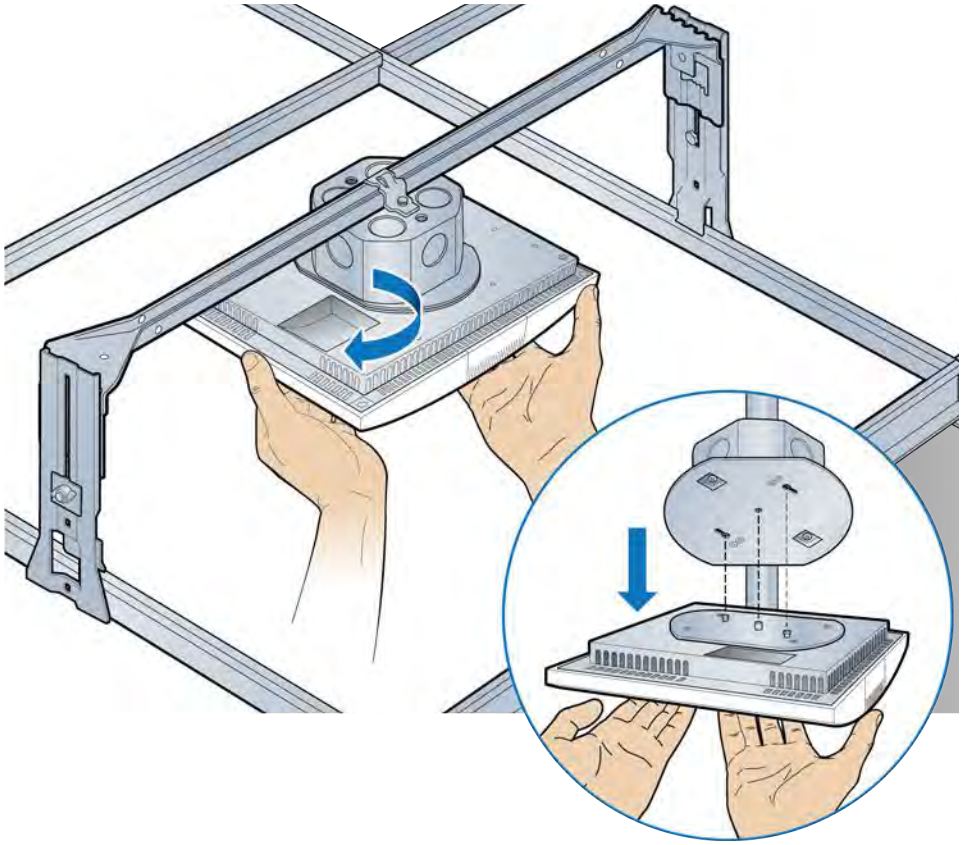

DRAFT

5 Remove the mounting plate from the failed RP and attach it to the replacement RP.

Set the failed RP aside.

NOTE: Apply thread locking compound to the screws prior to installation.

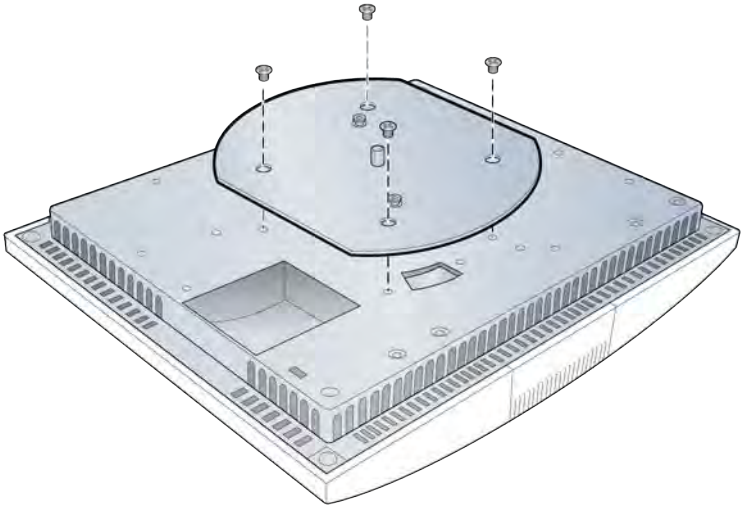

6 Attach the RP to the octagonal mounting plate and twist to engage.

DRAFT

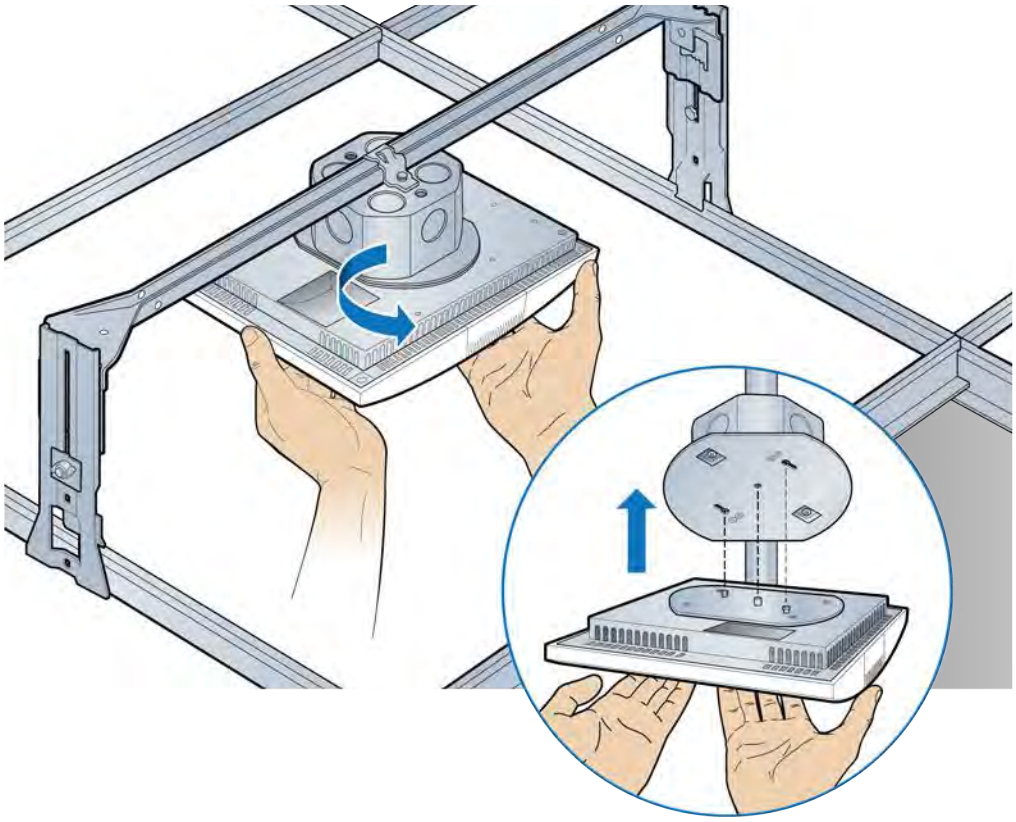

7 Connect the Ethernet cable to the RP.

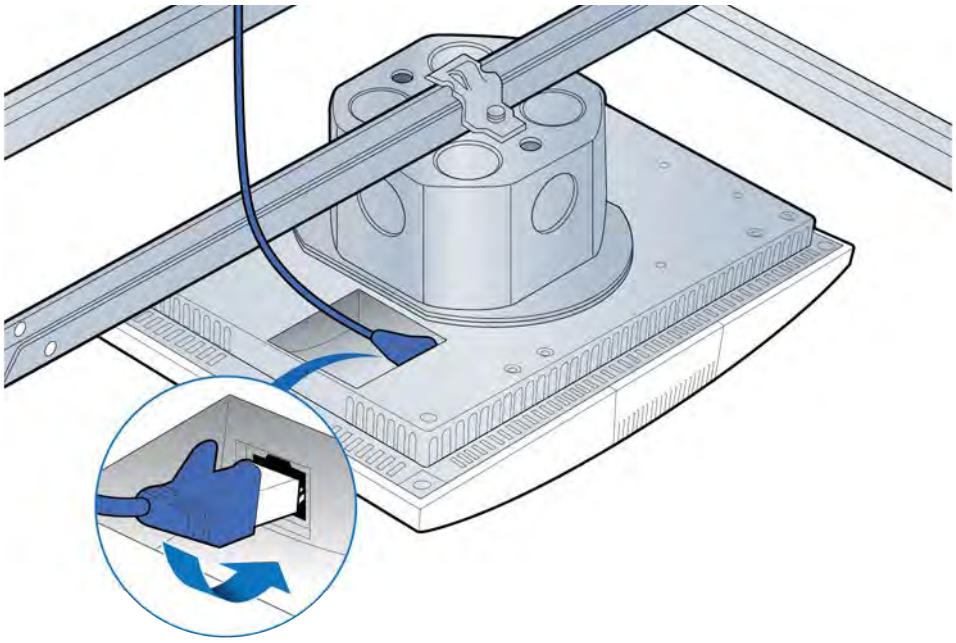

DRAFT

8 Replace the ceiling tile.

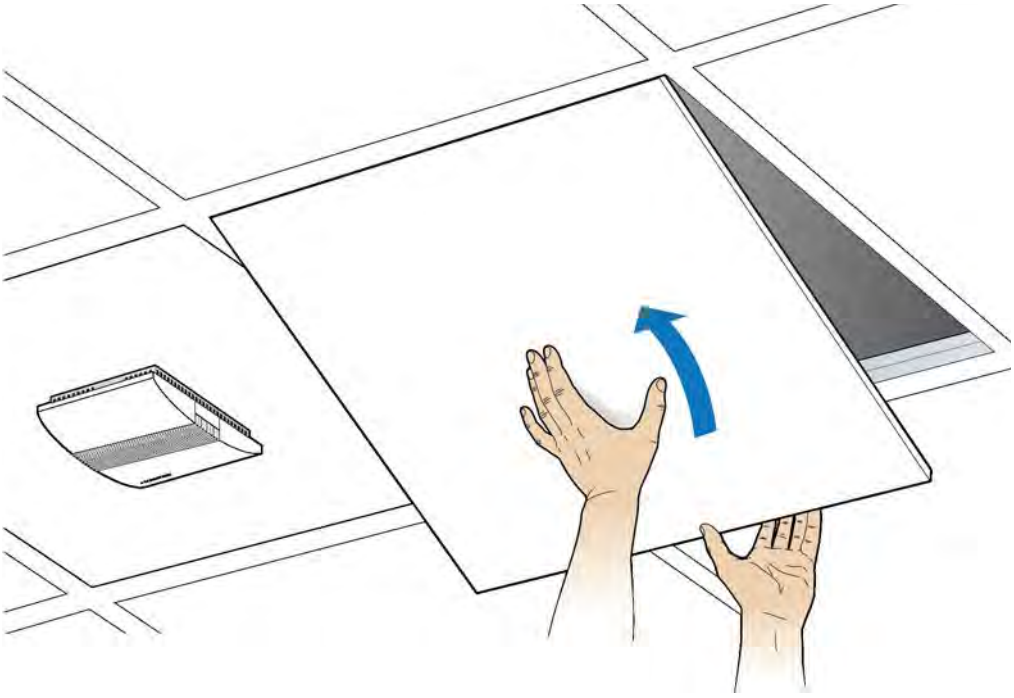

9 Verify the RP installation. See The operational state of the RP can be determined by the LED status on the RP. Additional information can be attained from the WebGUI status screens.

For verification procedures, see RP post-replacement verification.

DRAFT

Replacing a ceiling Indoor RP (on tile)

1 Disconnect the Ethernet cable from the RP.

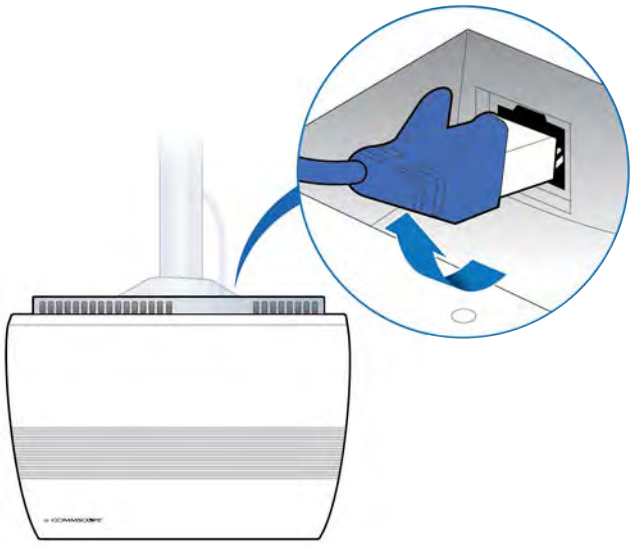

2 If there is a locking screw, loosen it.

3 Twist the RP.

DRAFT

4 Remove the RP. Remove the mounting plate from the RP and set the RP aside.

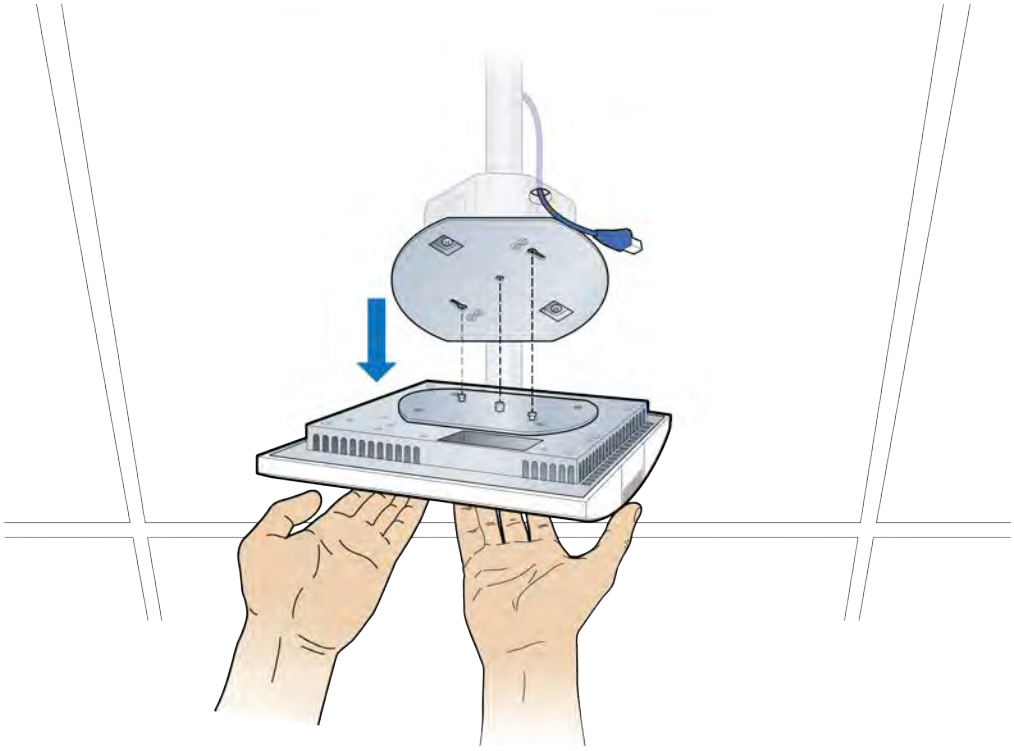

DRAFT

5 Attach the plate to the replacement RP.

NOTE: Apply thread locking compound to the screws prior to installation.

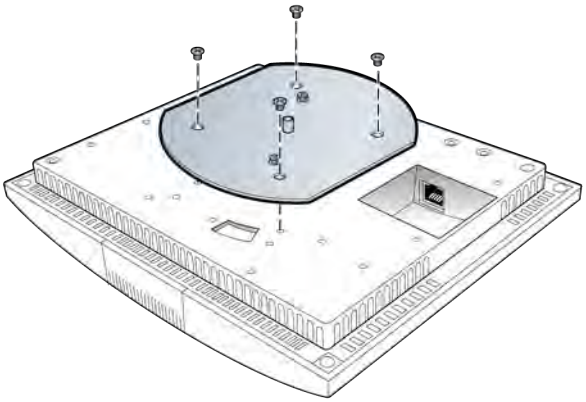

6 Attach the RP to the octagonal mounting plate.

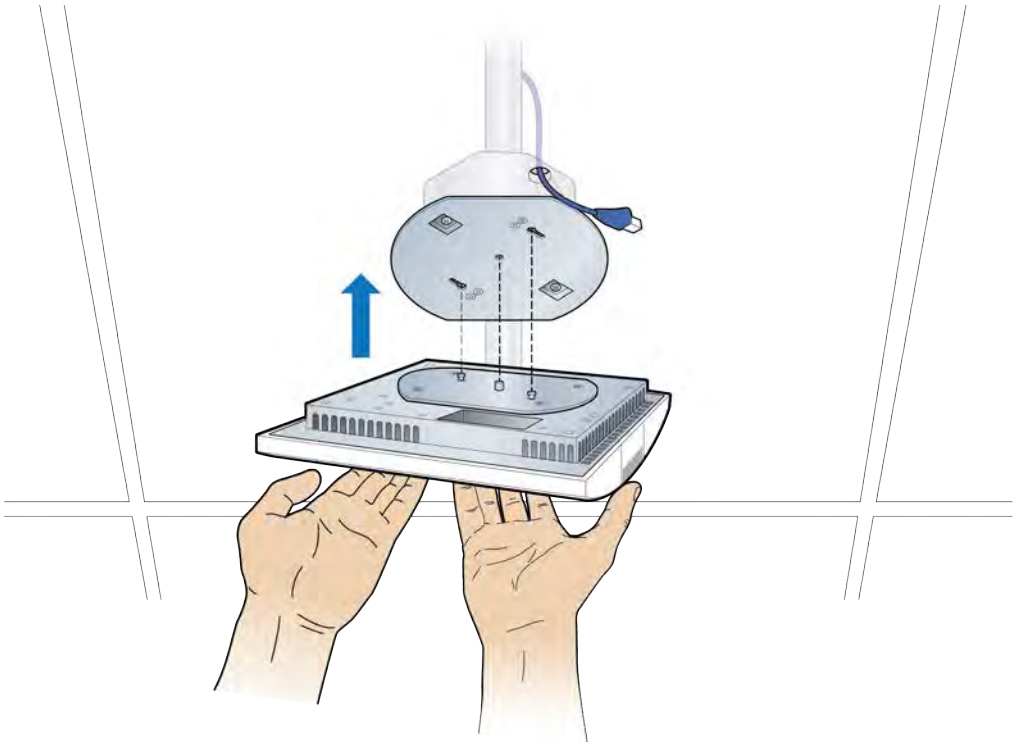

DRAFT

7 Secure RP to octagon plate.

8 Connect the Ethernet cable to the RP.

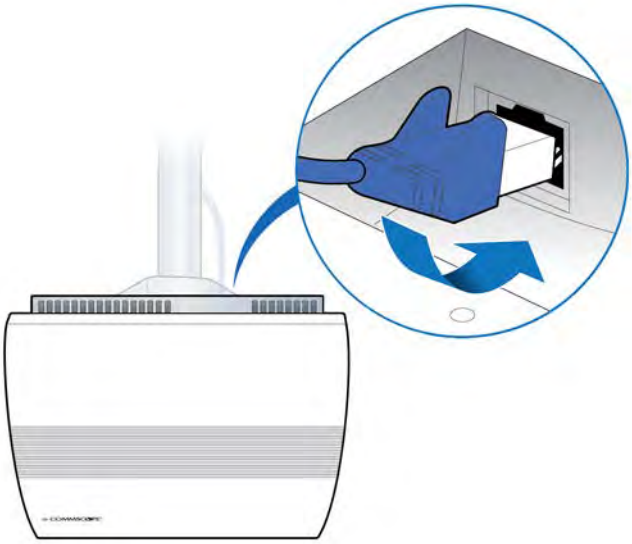

9 Verify the RP installation. See The operational state of the RP can be determined by the LED status on the RP. Additional information can be attained from the WebGUI status screens.

For verification procedures, see RP post-replacement verification.

DRAFT

Replacing a flown mounted Indoor RP

1 Disconnect the Ethernet cable.

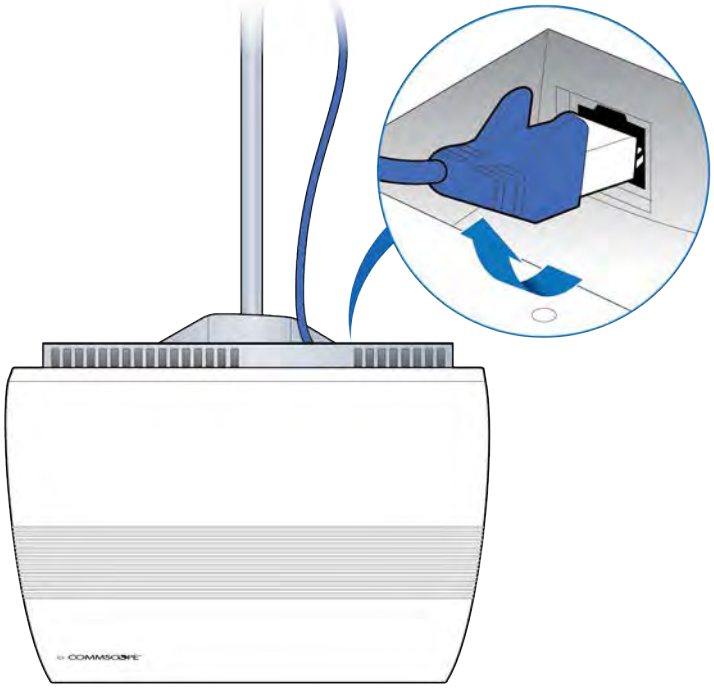

2 Remove the RP.

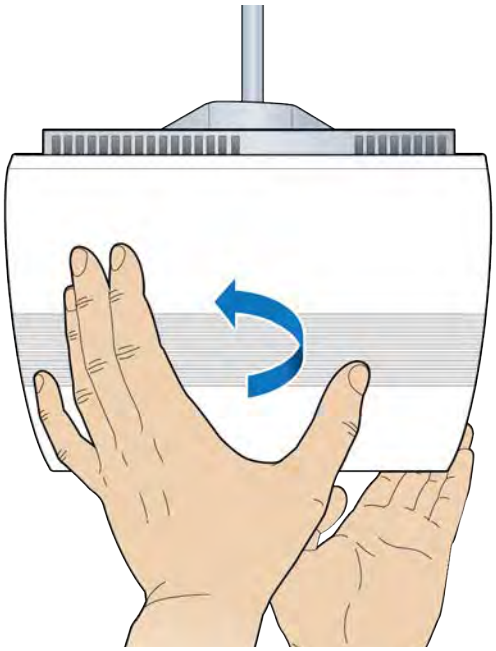

DRAFT

3 Remove the mounting plate from the RP and set the failed RP aside.

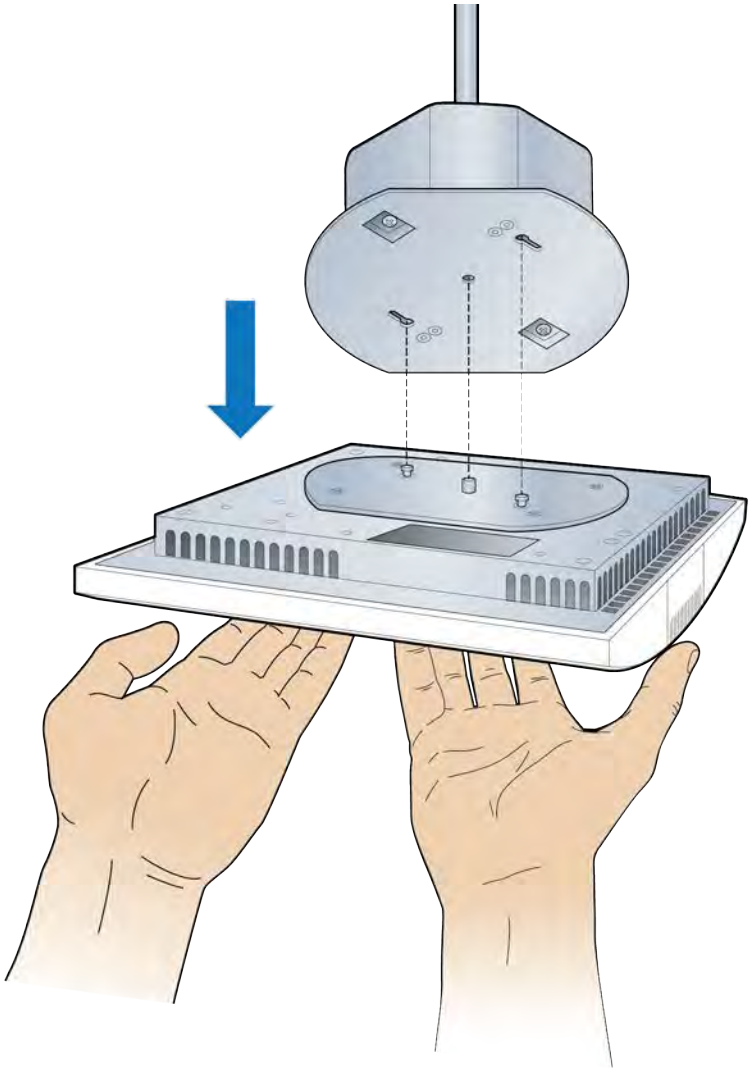

4 Attach the mounting plate to the replacement RP.

NOTE: Apply thread locking compound to the screws prior to installation.

DRAFT

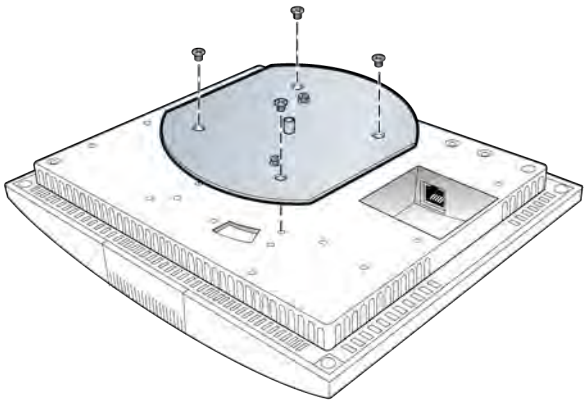

5 Attach the RP to the octagon plate.

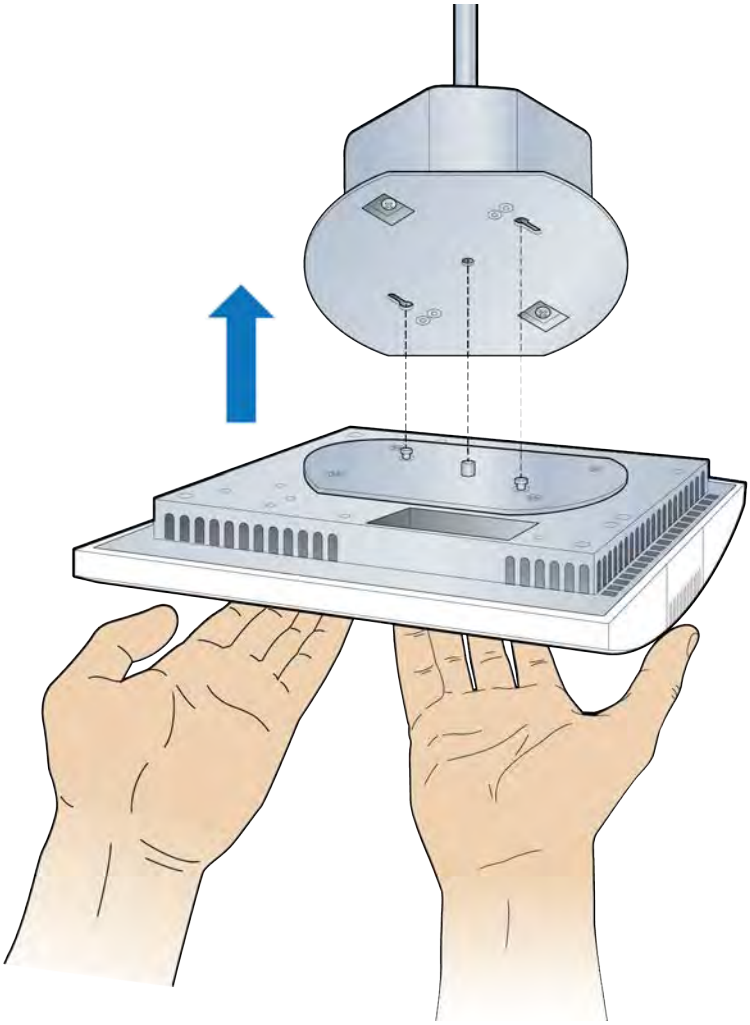

DRAFT

6 Secure the RP.

DRAFT

7 Connect the Ethernet cable to the RP.

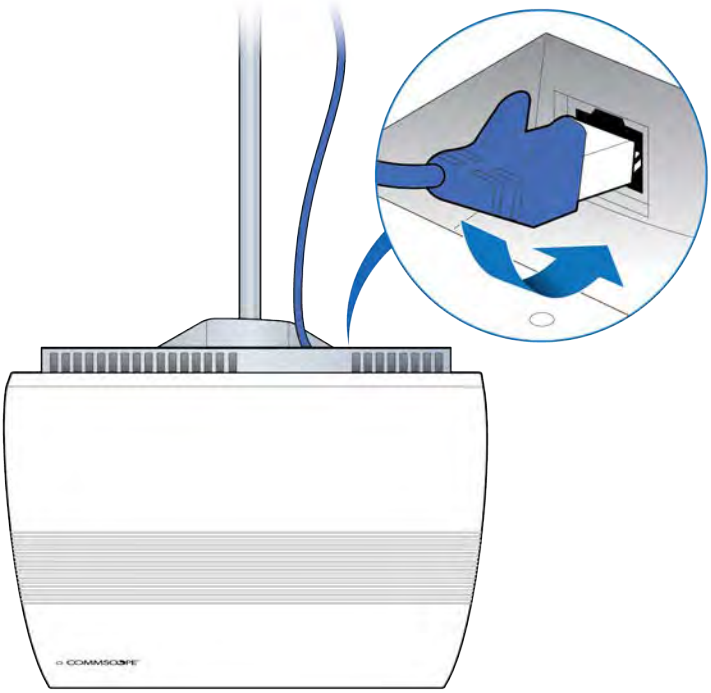

8 Verify the RP installation. See The operational state of the RP can be determined by the LED status on the RP. Additional information can be attained from the WebGUI status screens.

For verification procedures, see RP post-replacement verification.

Replacing a pole mounted Indoor RP

1 Disconnect the Ethernet cable.

DRAFT

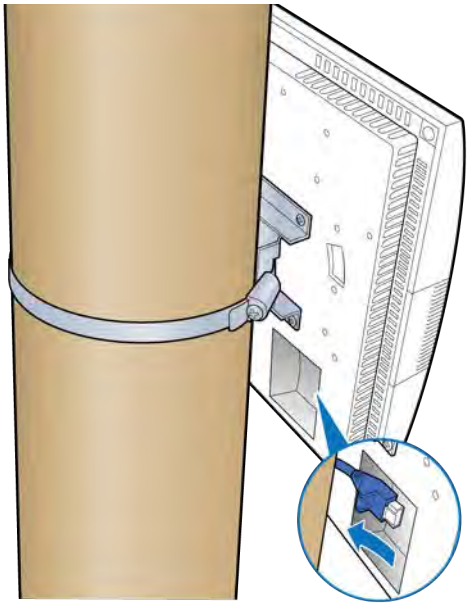

2 Loosen the clamp, remove the RP and set it aside.

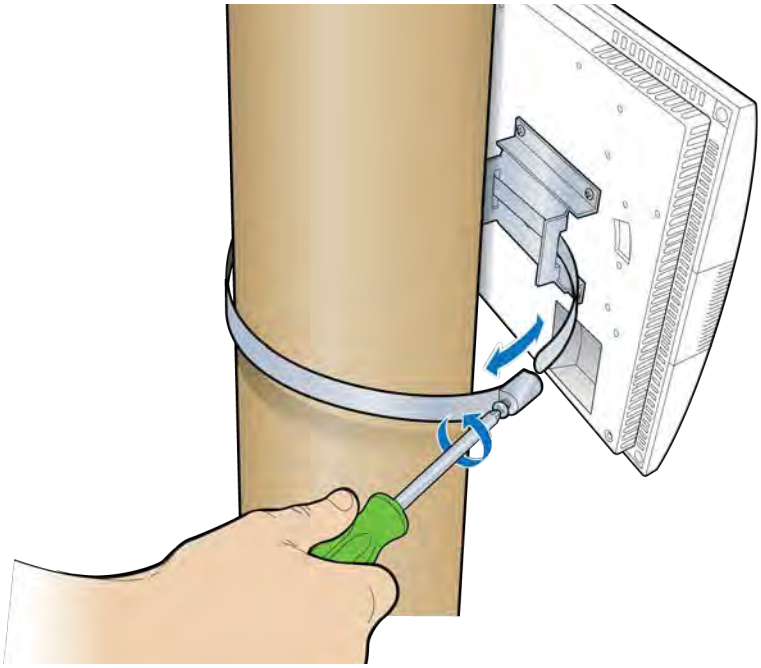

3 Remove the bracket from the failed RP and attach it to the replacement RP.

DRAFT

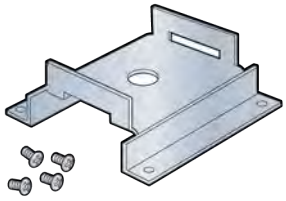

Bracket

4 Attach the replacement RP to the pole using the clamp.

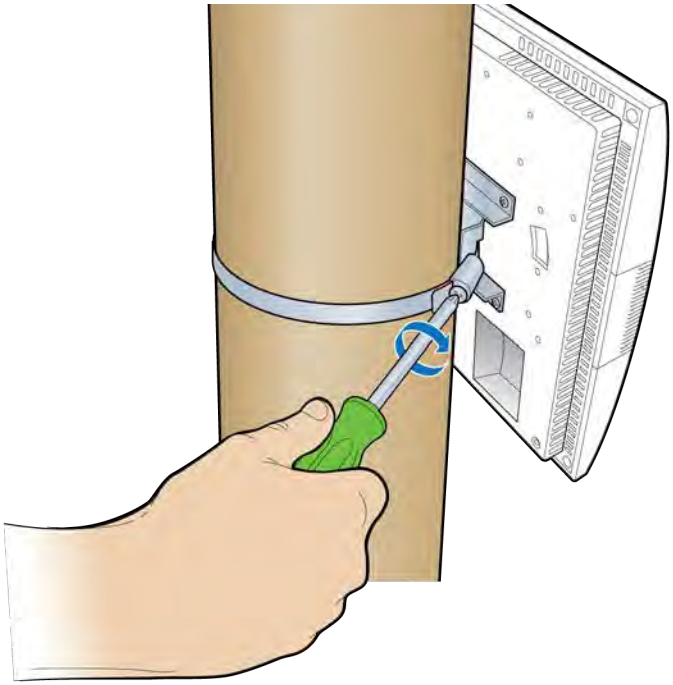

5 Connect the Ethernet cable to the RP.

DRAFT

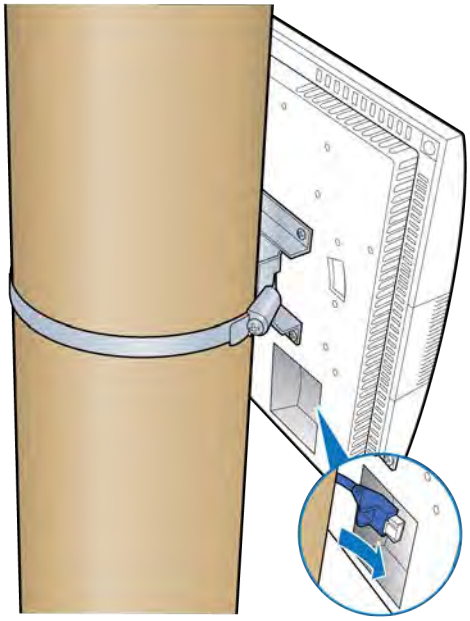

6 Verify the RP installation. See The operational state of the RP can be determined by the LED status on the RP. Additional information can be attained from the WebGUI status screens.

For verification procedures, see RP post-replacement verification.

Replacing a vertical pole mounted Rugged RP

1 Disconnect the Ethernet cable and the antenna couplers from the RP.

DRAFT

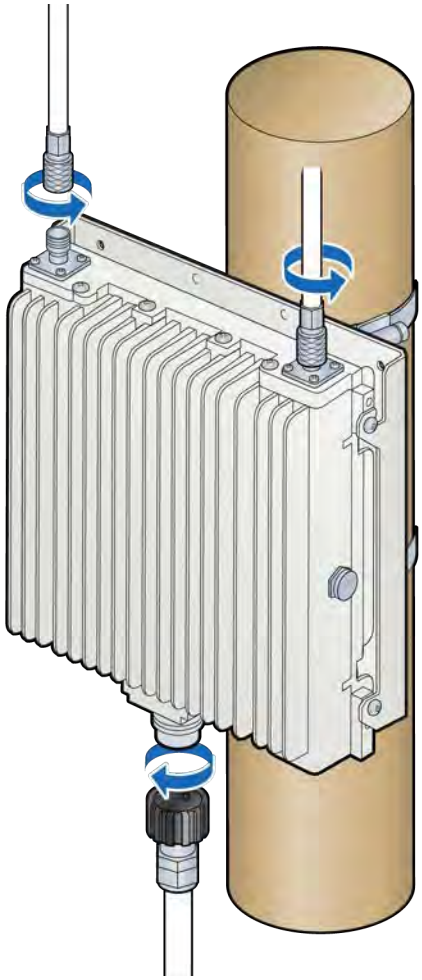

2 Remove the screws on the bottom of the RP and loosen the top screws.

DRAFT

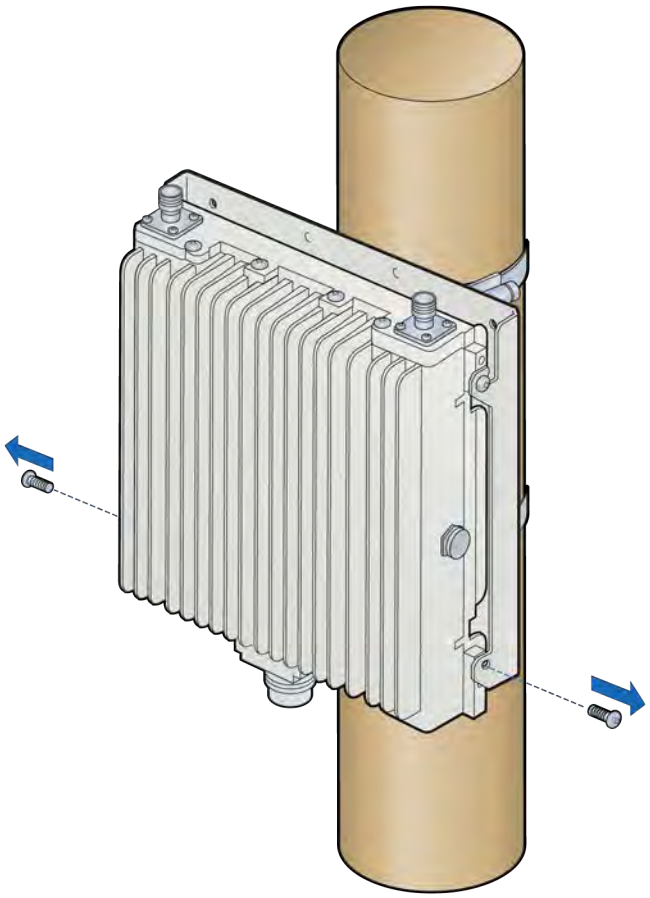

3 Lift the RP off of the mounting plate and set it aside.

DRAFT

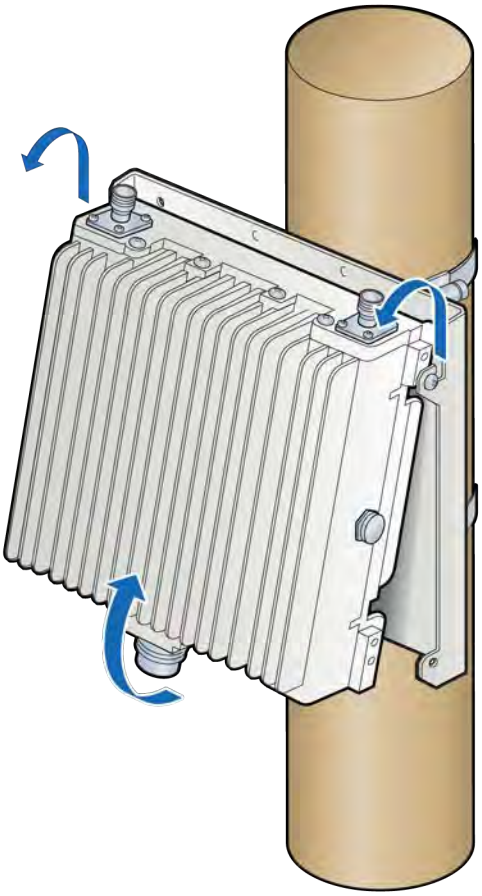

4 Insert two screws into the upper holes on the replacement RP.

NOTE: Do not tighten the screws.

DRAFT

CAUTION

Ensure that the RP is oriented correctly with the two antenna connectors at the top of the RP.

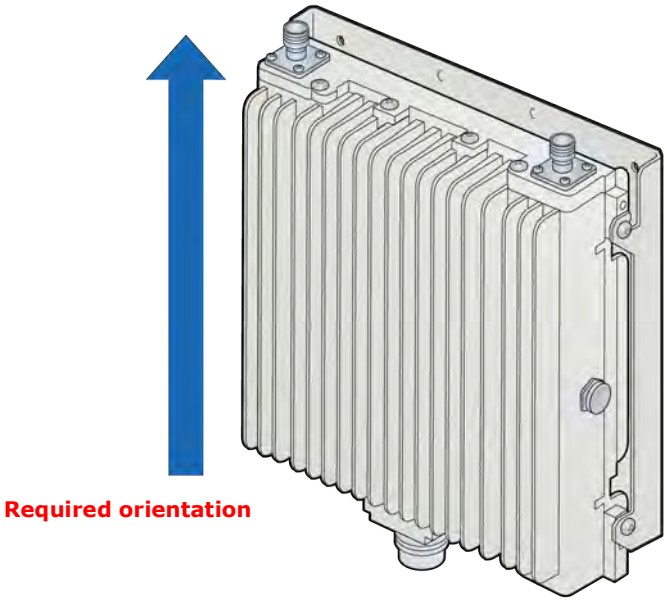

5 Hang the RP to the mounting bracket using the installed screws. Align holes at bottom location of bracket and install two additional screws.

DRAFT

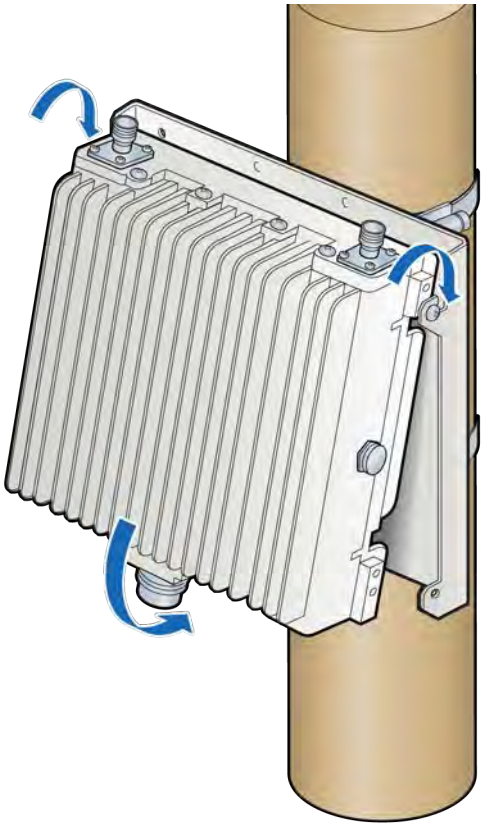

DRAFT

6 Insert two screws on the bottom of the RP and tighten all four screws.

NOTE: The torque requirement for the mounting screws is 20-21 in-lbs.

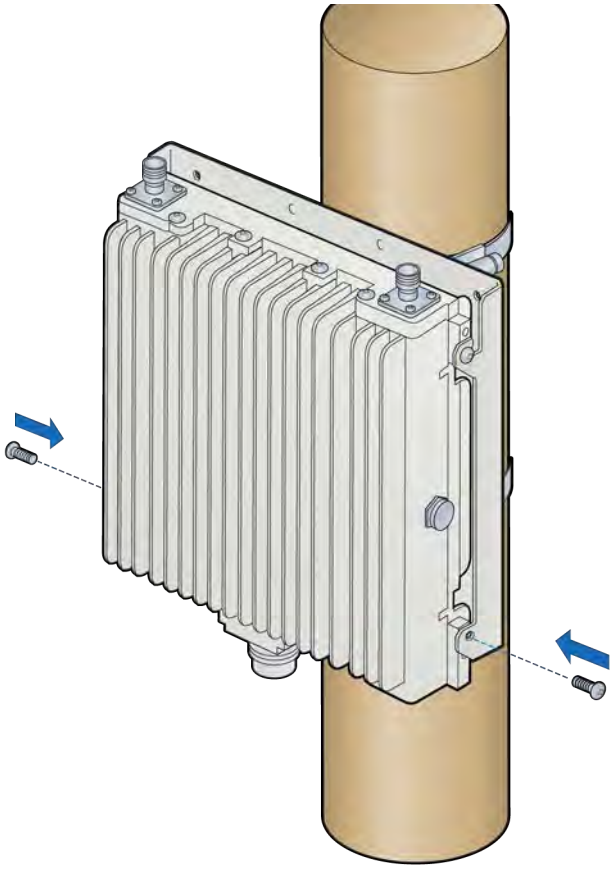

7 Connect the antenna couplers on the top of the RP.

NOTE: Check the antenna coupler manufacturer's documentation for torque requirements.

8 Connect the Ethernet cable RJ45 end to the bottom of the RP.

DRAFT

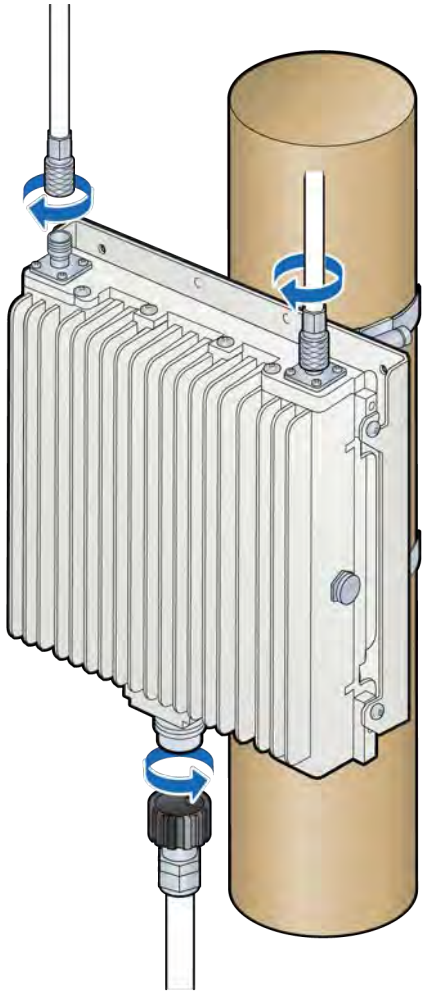

9 Verify the RP installation. See The operational state of the RP can be determined by the LED status on the RP. Additional information can be attained from the WebGUI status screens.

For verification procedures, see RP post-replacement verification.

Replacing a horizontal pole mounted Rugged RP

1 Disconnect the Ethernet cable and the antenna couplers from the RP.

DRAFT

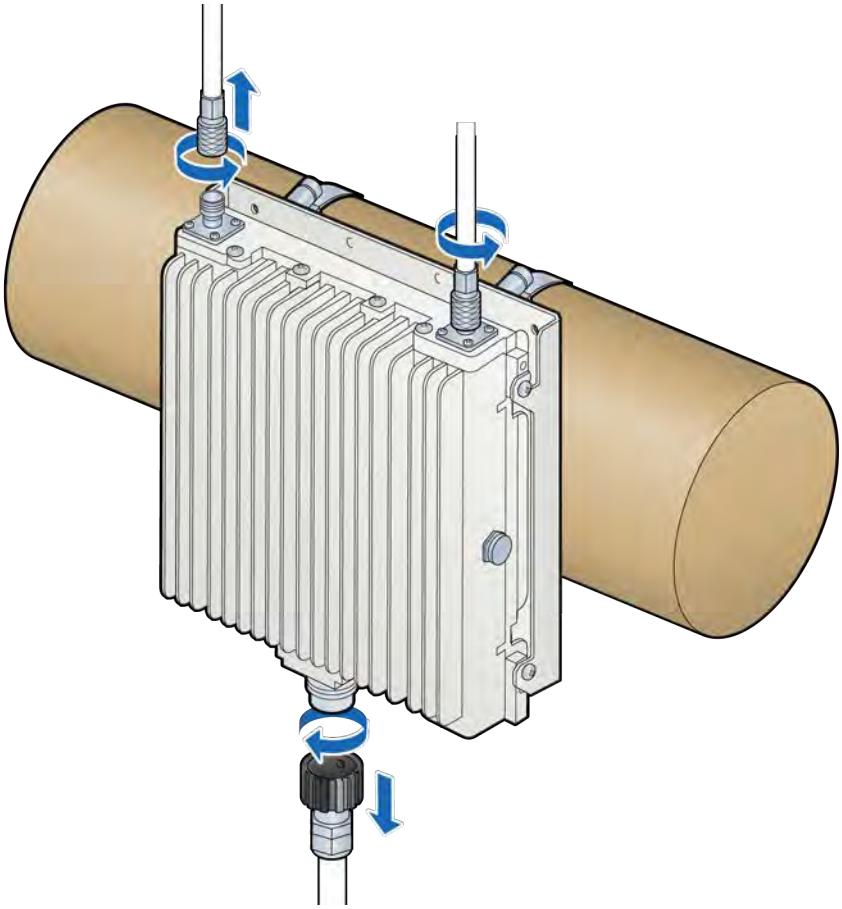

2 Remove the screws on the bottom of the RP and loosen the top screws.

DRAFT

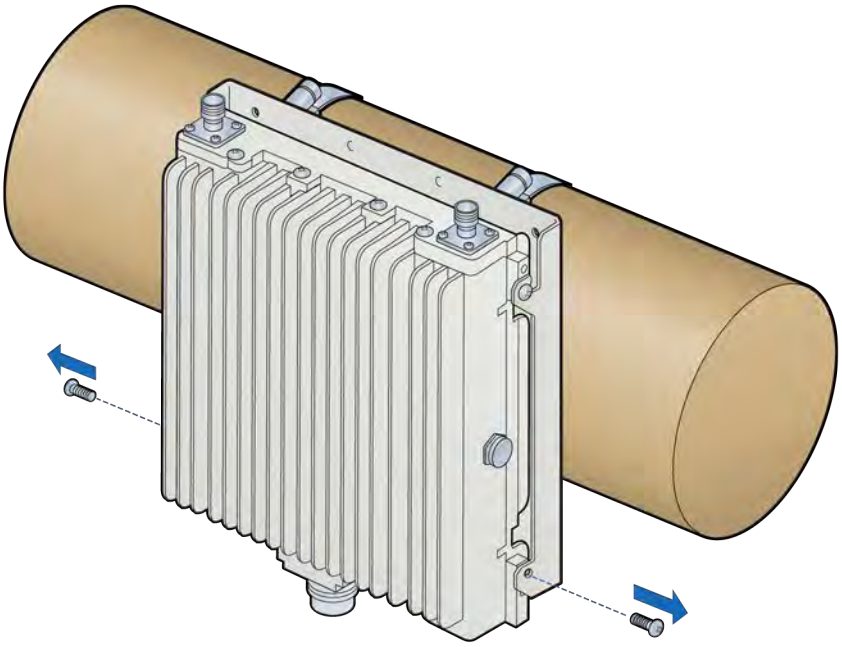

3 Lift the failed RP off of the mounting plate and set it aside.

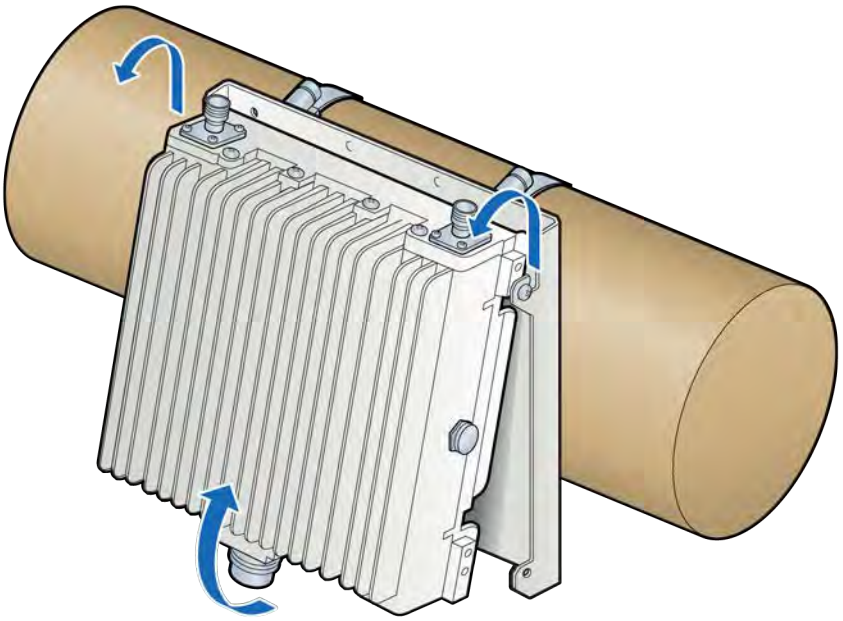

4 Insert two screws into the upper holes on the replacement RP.

NOTE: Do not tighten the screws.

DRAFT

CAUTION

Ensure that the RP is oriented correctly with the two antenna connectors at the top of the RP.

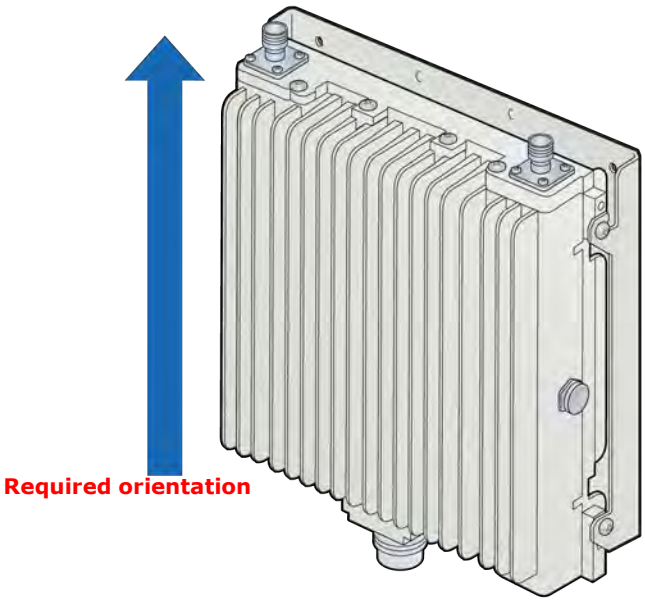

5 Attach the RP to the mounting plate. Tighten the top screws on the RP and insert and tighten the bottom screws on the RP.

NOTE: The torque requirement for the mounting screws is 20-21 in-lbs.

DRAFT

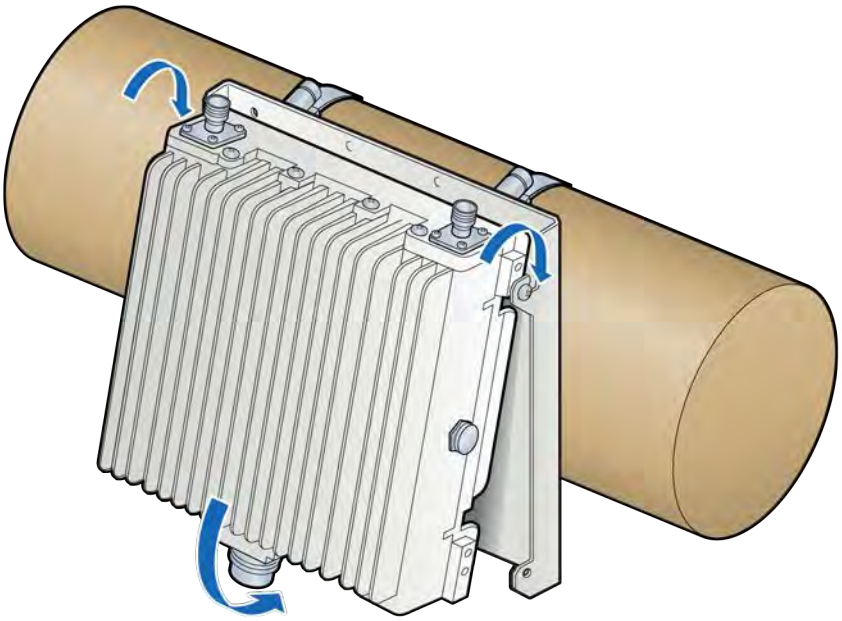

6 Connect the antenna couplers on the top of the RP.

NOTE: Check the antenna coupler manufacturer's documentation for torque requirements.

7 Connect the Ethernet cable RJ45 end to the bottom of the RP.

DRAFT

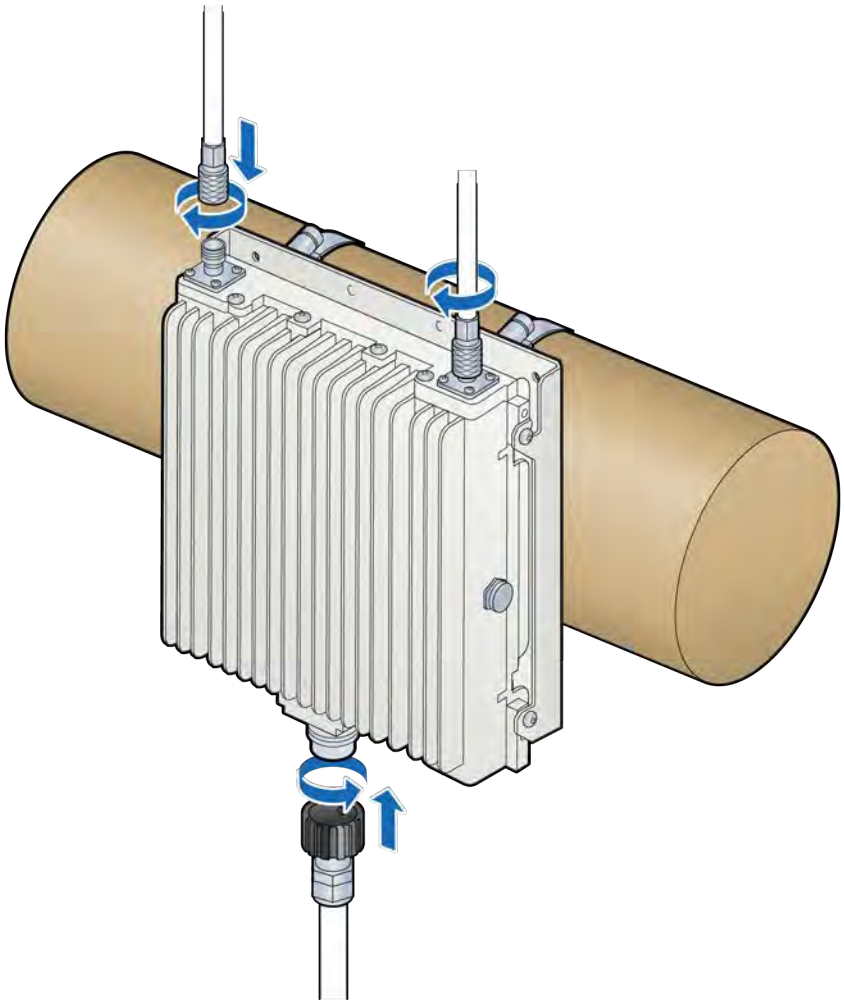

8 Verify the RP installation. See The operational state of the RP can be determined by the LED status on the RP. Additional information can be attained from the WebGUI status screens.

For verification procedures, see RP post-replacement verification.

Replacing a wall mounted Rugged RP

1 Disconnect the Ethernet cable and the antenna couplers from the RP.

DRAFT

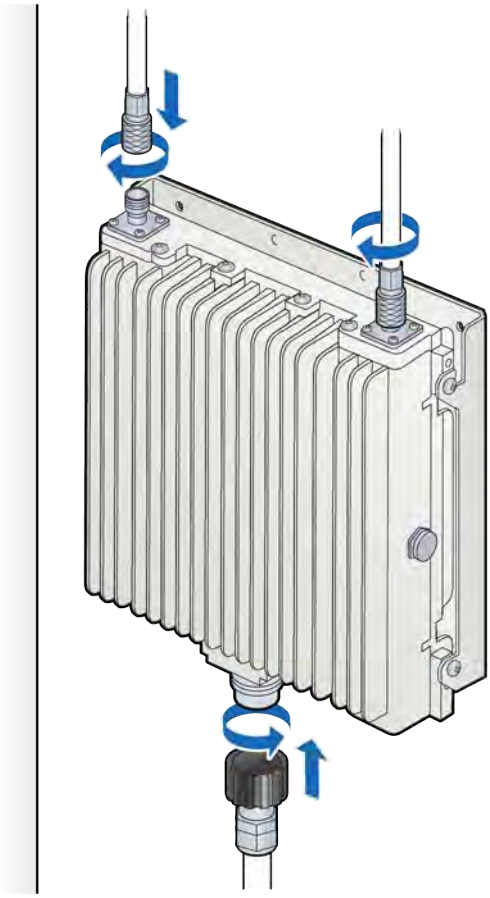

2 Remove the screws on the bottom of the RP, loosen the top screws and remove RP from mounting plate. Set RP aside.

DRAFT

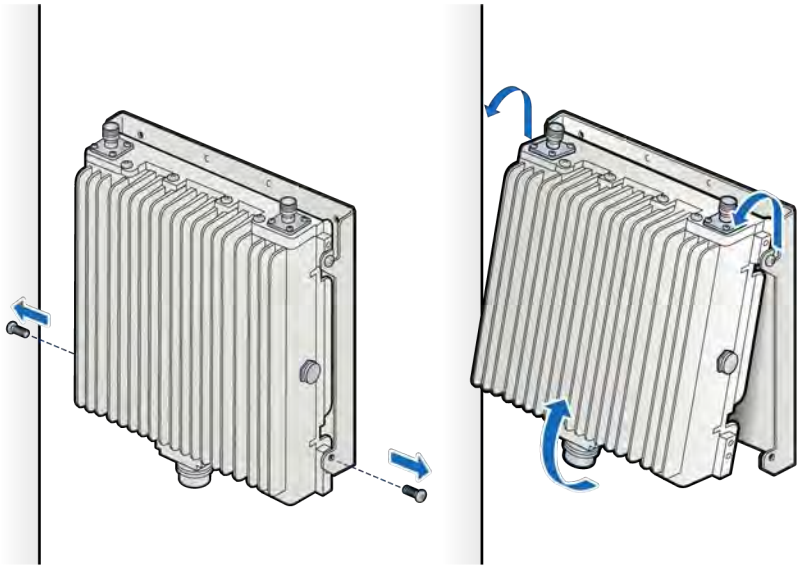

3 On the replacement RP, insert two screws into the upper holes.

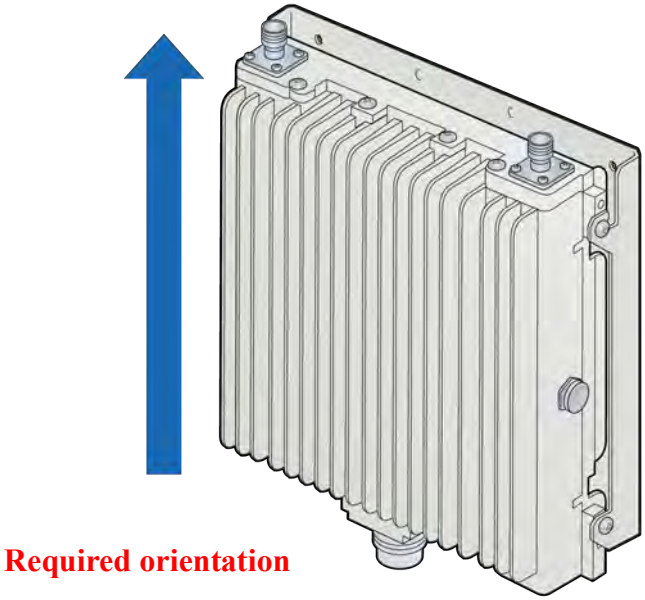

4 Attach the RP to the mounting plate. Tighten the top screws on the RP and insert and insert and the bottom screws on the RP.

DRAFT

NOTE: The torque requirement for the mounting screws is 20-21 in-lbs.

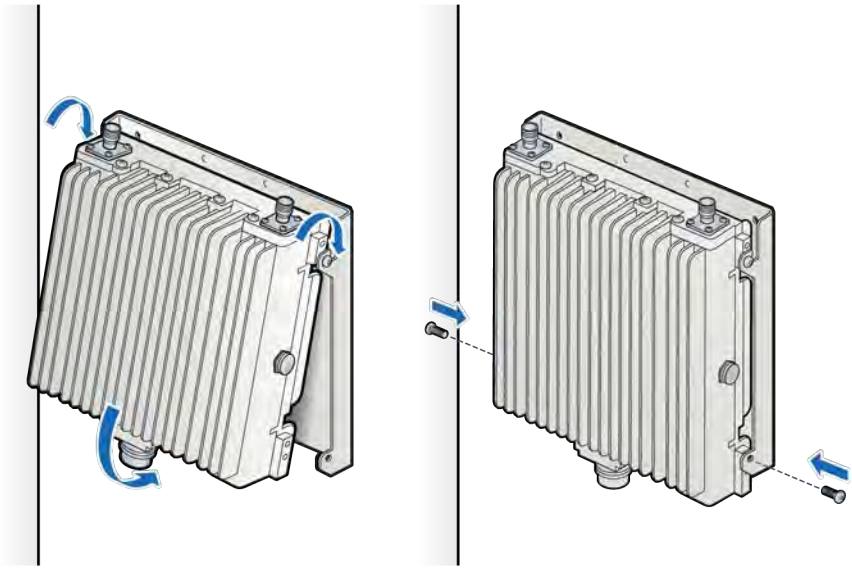

5 Connect the antenna couplers on the top of the RP.

NOTE: Check the antenna coupler manufacturer's documentation for torque requirements.

6 Connect the Ethernet cable RJ45 end to the bottom of the RP.

DRAFT

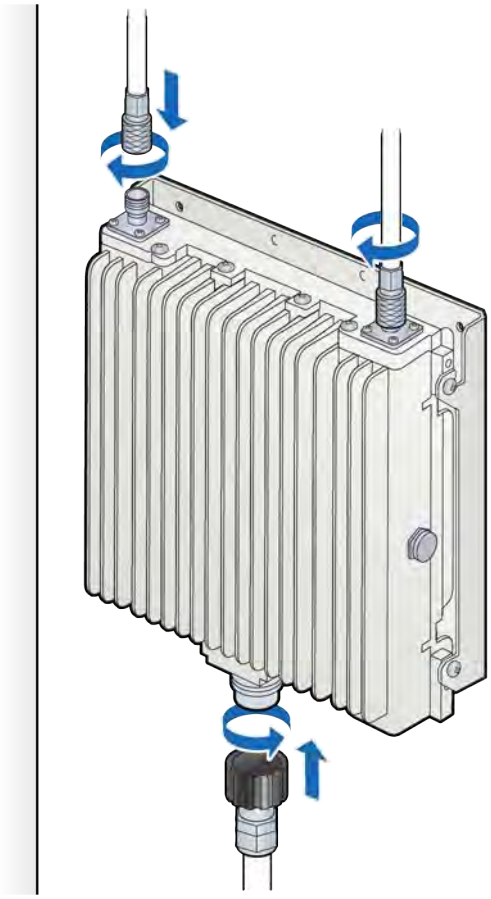

7 The operational state of the RP can be determined by the LED status on the RP. Additional information can be attained from the WebGUI status screens.

For verification procedures, see RP post-replacement verification.

RP post-replacement verification

The operational state of the replaced RP can be determined by the LED status on the RP. Additional information can be attained from the WebGUI status screens.

1 Connect the Ethernet cable to the MGMT port on the BC's front panel.

DRAFT

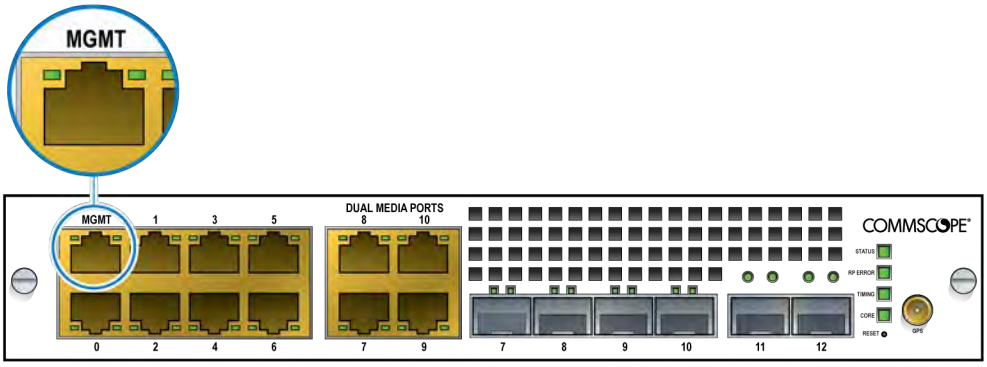

2 Open a supported browser.

3 Enter the IP address for the GUI, using the format below.

https://<IP address of Management Interface>:6002

Example:

`https://192.168.8.1:6002`

The Sign In dialog box appears.

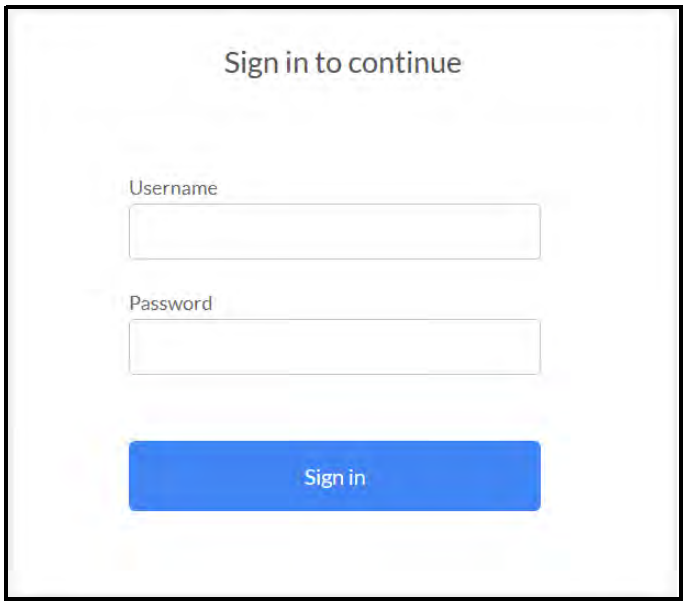

DRAFT

4 Ensure the Management Mode tab is selected. The Dashboard displays.

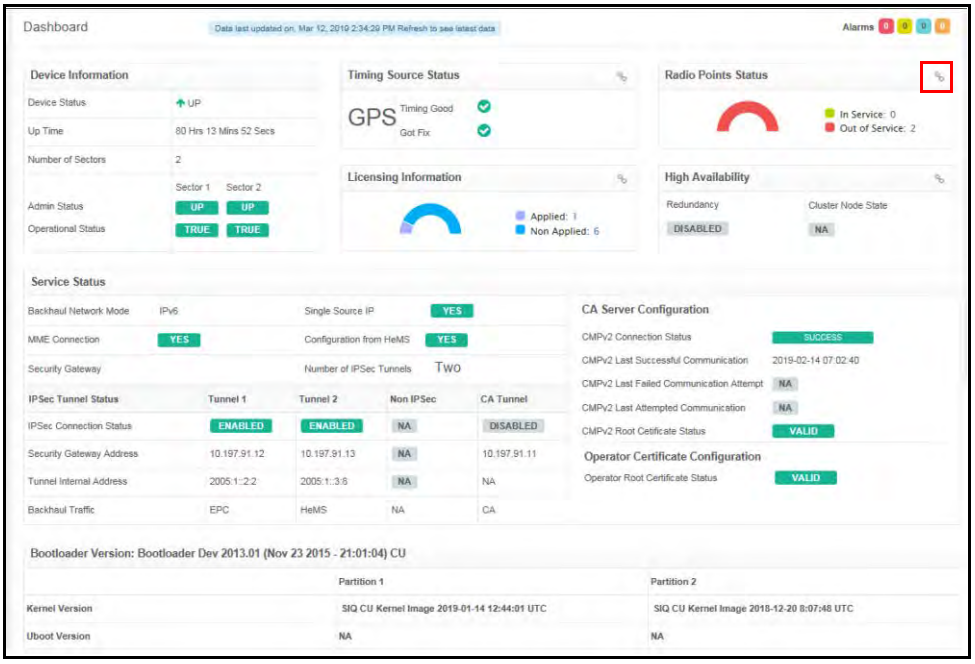

5 On the Dashboard, click the Radio Points link. The Radio Points Dashboard displays.

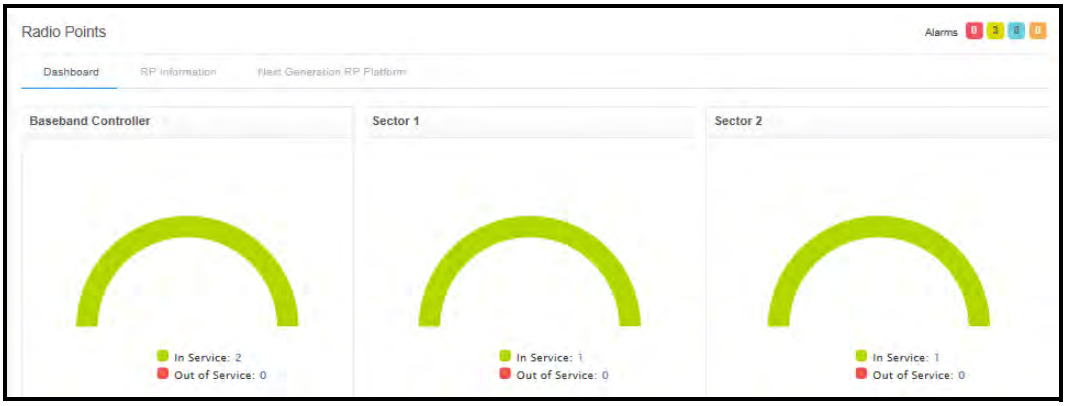

6 Click the RP Information tab. The RP Information page displays.

DRAFT

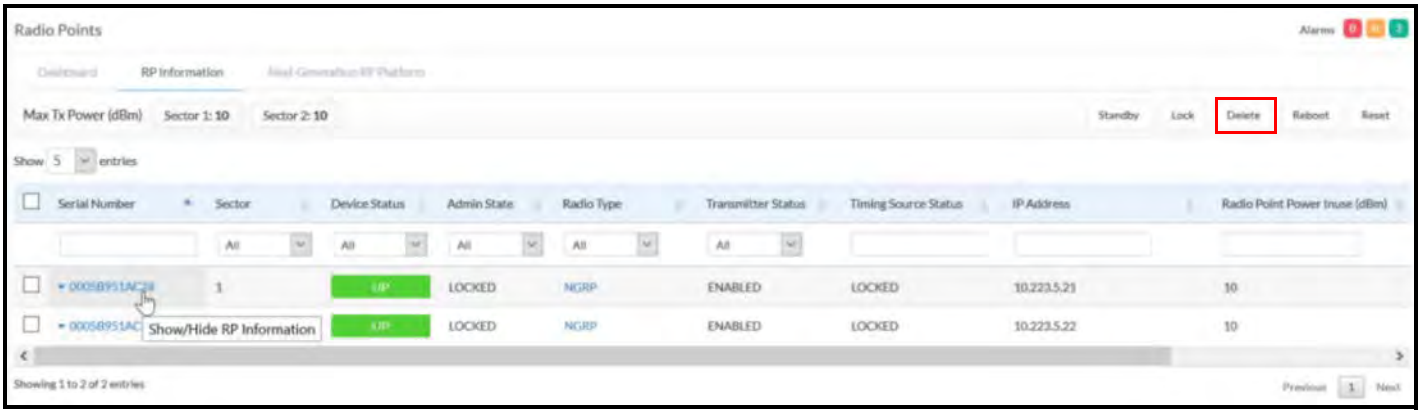

7 Make sure the replaced RP is UP.

DRAFT