RP5100i installation overview

The RP5100i is the Radio Point for indoor solutions.

There are four configurations for installing the RP5100i, which are dependent on the ceiling type.

- Ceiling mount, on tile
- Ceiling mount, above tile
- Flown mount
- Pole mount

NOTE

Once the Radio Point is installed and powered on, it may take up to 20 minutes for the frequency to stabilize and lock.

NOTE

If the MR port is connected to a switch that does not provide IEEE802.3bt, type-4 PoE power, the SR port can be used to provide power with a PoE++ injector. For more information, see *ONECELL® Network Planning Guide, v6.5* (M0306AN).

Ceiling mount

Mounting the Radio Point (RP) above or on the ceiling tile requires the following hardware provided by CommScope:

- Radio Point plate and screws
- 4" octagon box, 1-1/2" deep with 1/2" side cutouts
- Clamp and screw

Figure 5-1. CommScope ceiling mount kit contents

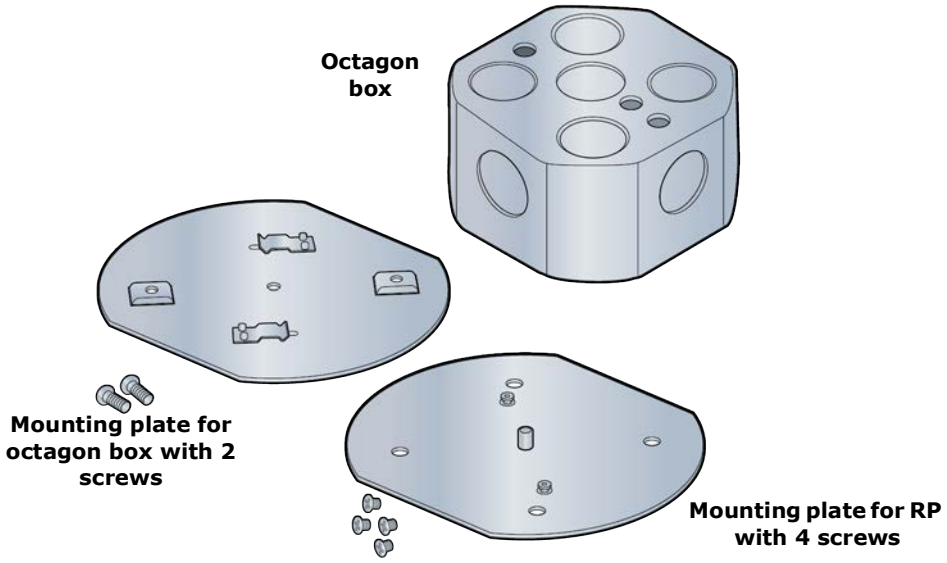

Mounting the Radio Point (RP) above or on the ceiling tile requires the following hardware provided by the system integrator:

- Drop rail – Eaton B-line BA50A or equivalent, with a static load capacity of at least 25 lbs without a drop wire, recommended

Figure 5-2. Drop rail, system integrator-provided

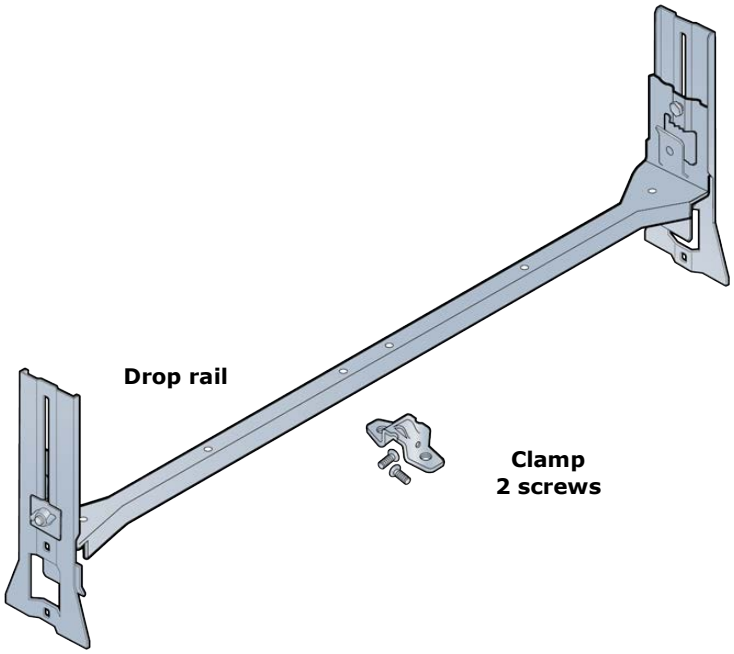

Mounting the Radio Point on the ceiling tile

1. Remove two ceiling tiles from the overhead.

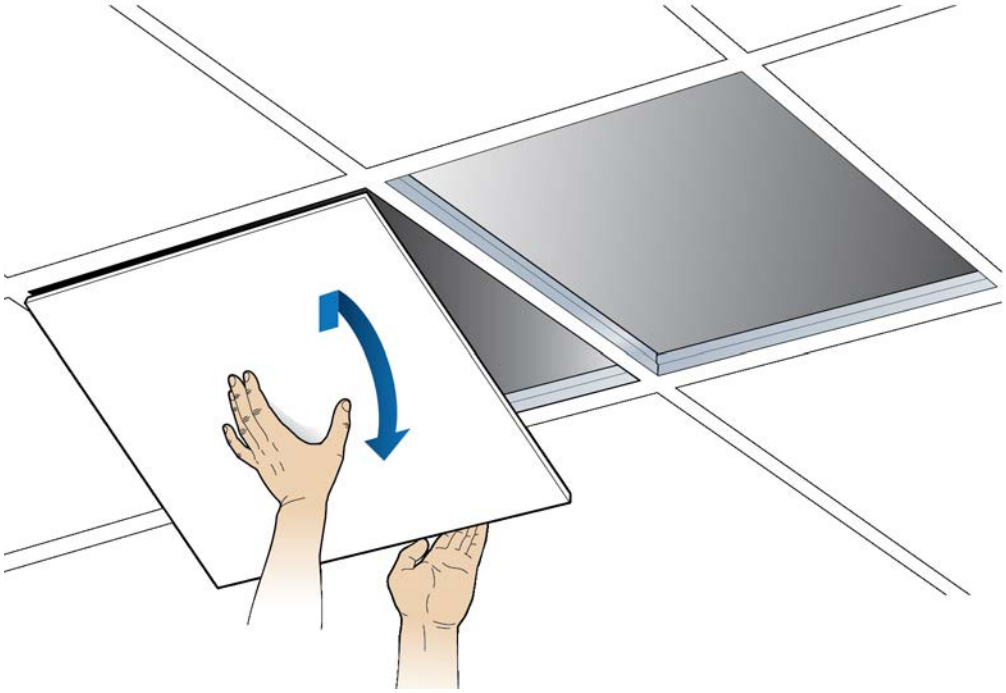

2. Place the octagon box on the tile and trace the outline. Cut the opening.
3. Drill a 1/2-inch diameter hole for the Ethernet cable pass-through.

   NOTE: Use a 1-1/2 deep RACO 8125 or equivalent.

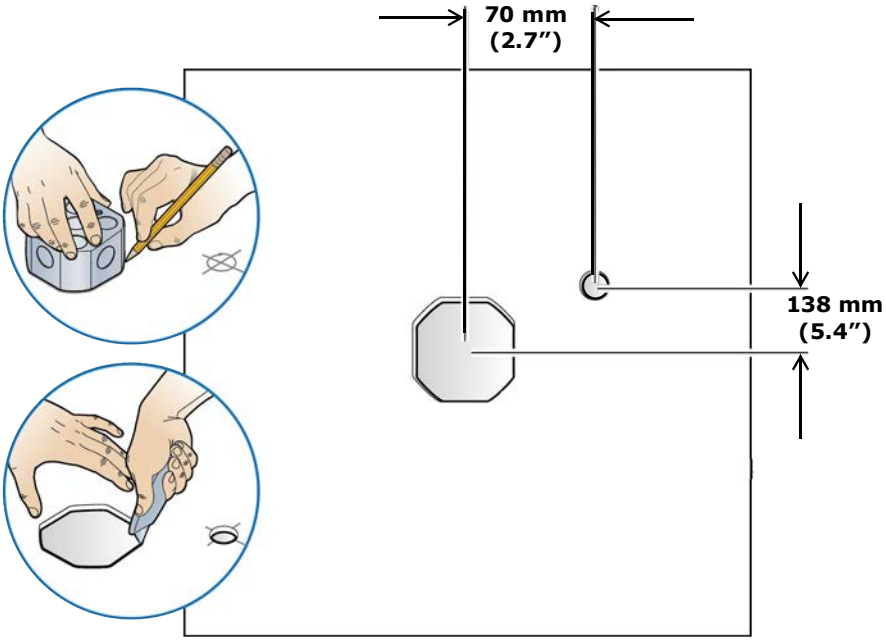

4 Attach the octagon box to the ceiling bracket using a clamp and screw.

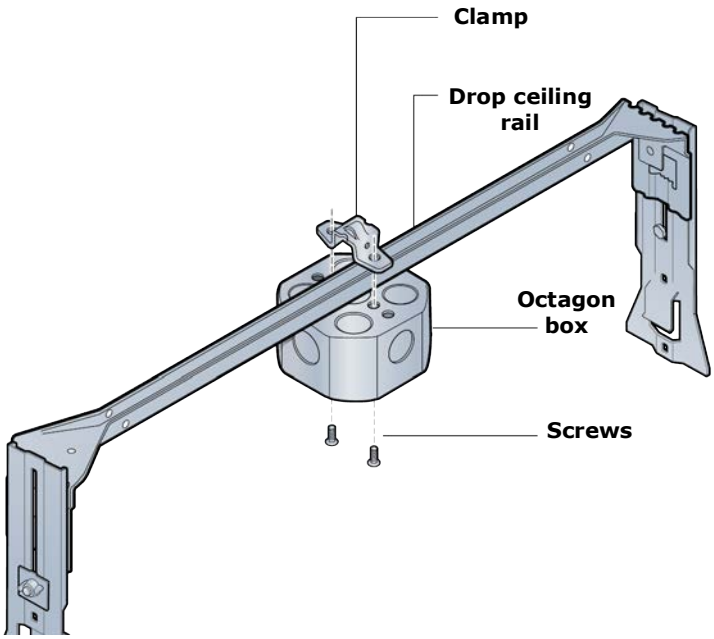

5 Replace the ceiling tile with the cutouts.

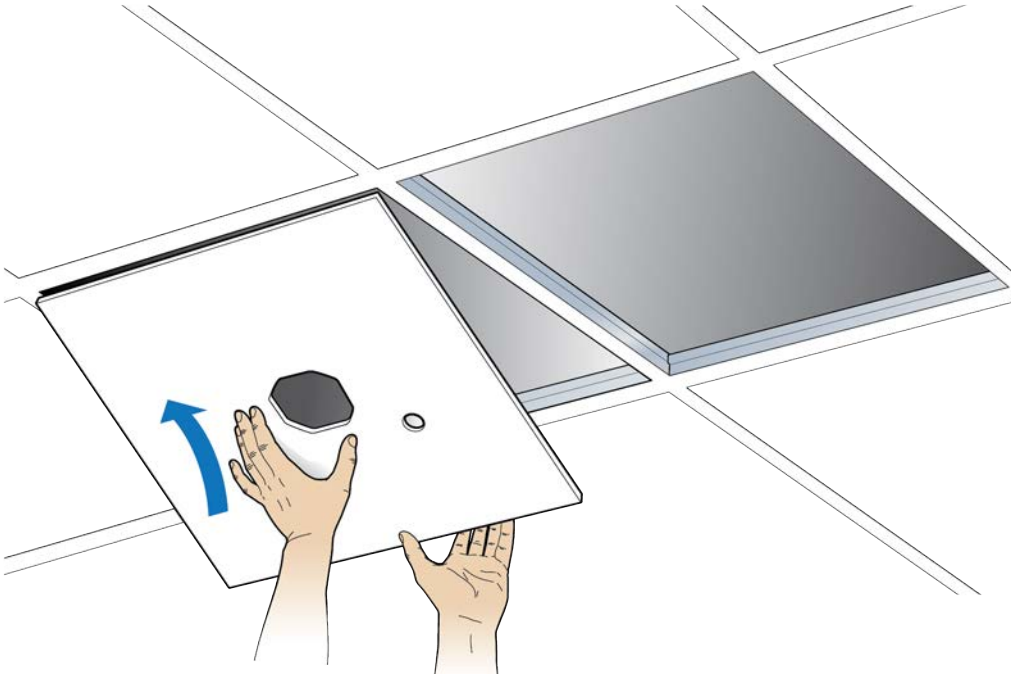

6 Install the drop rail/octagon box assembly over the modified tile.

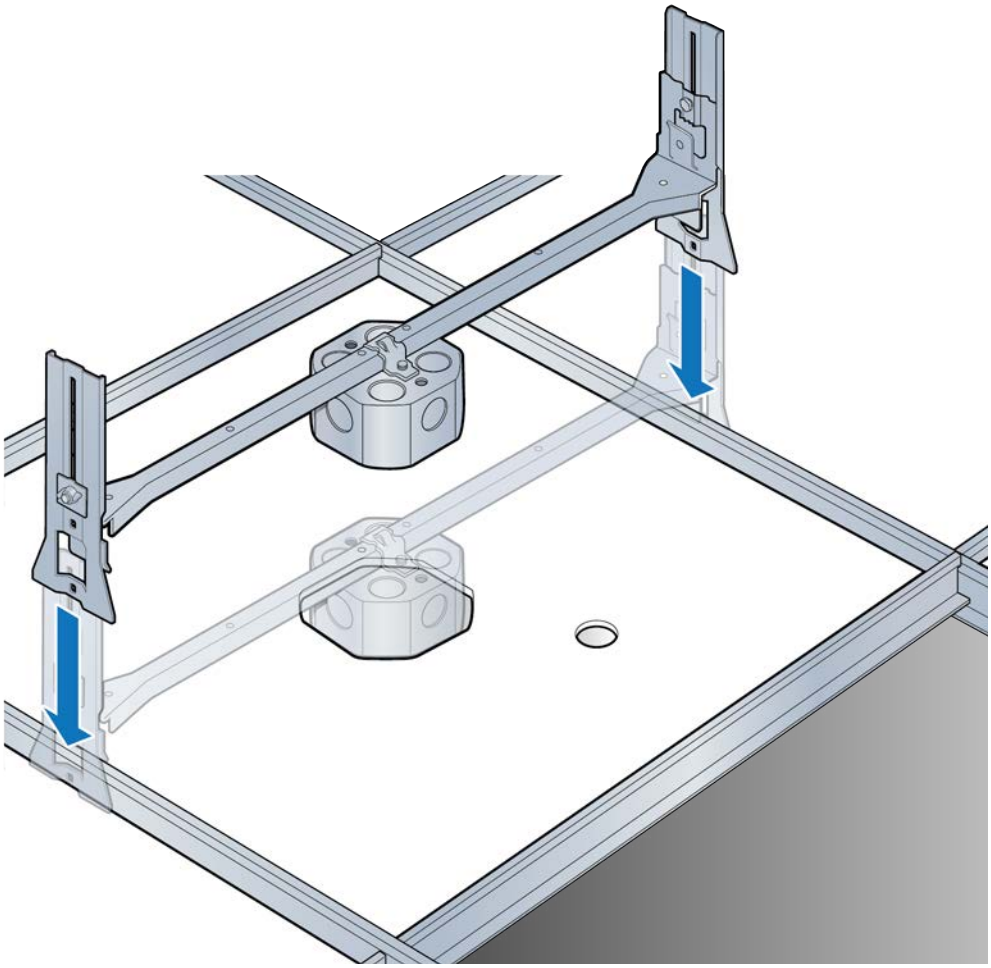

7 Attach the mounting plate onto the octagon box and feed the Ethernet cable through the small hole in the ceiling tile.

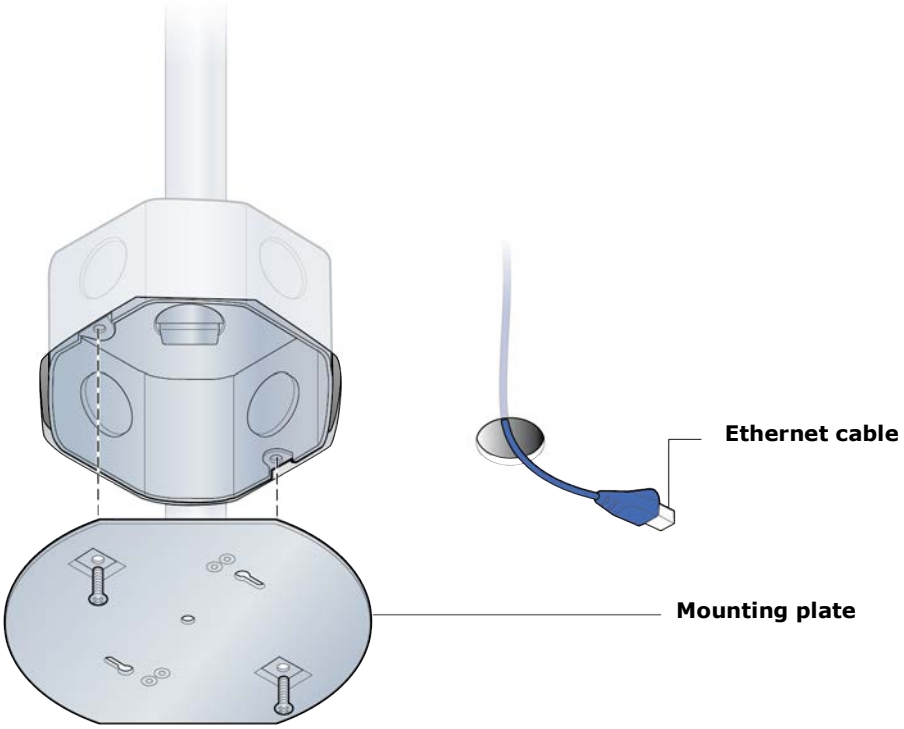

8 Attach base plate to the Radio Point.

NOTE: Apply thread locking compound to screws prior to installation.

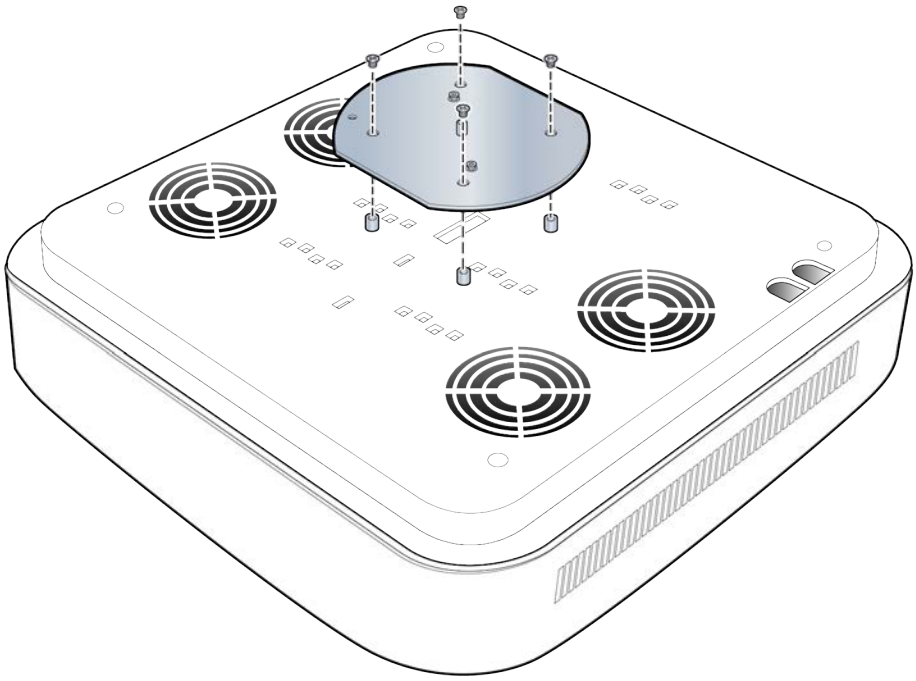

9 Mount the Radio Point on the octagon box plate.

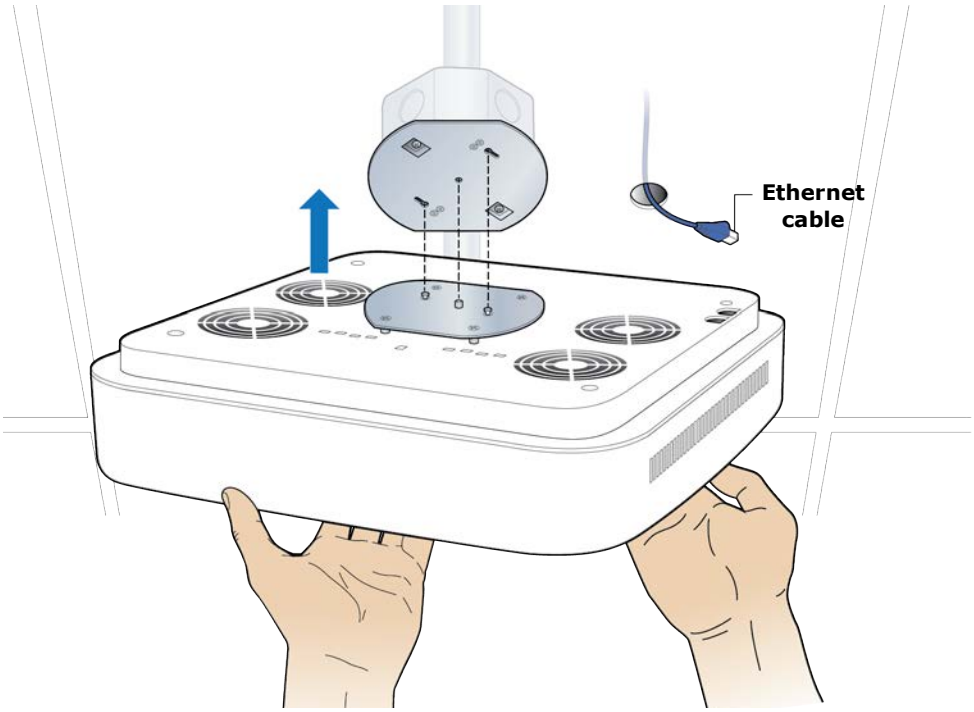

10 Secure Radio Point to the octagon plate.

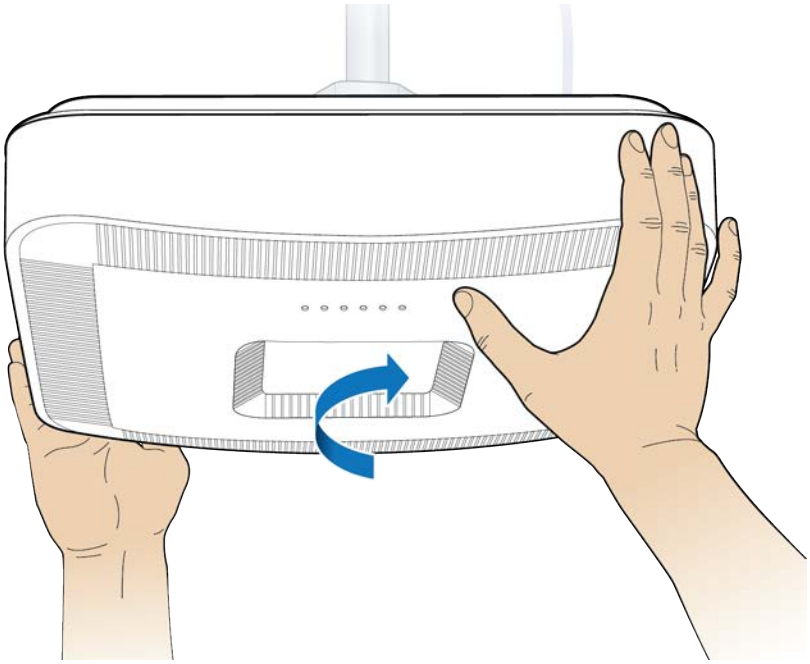

11 Remove the cover from the RP.

NOTE: The cover is attached to the RP with two lanyards.

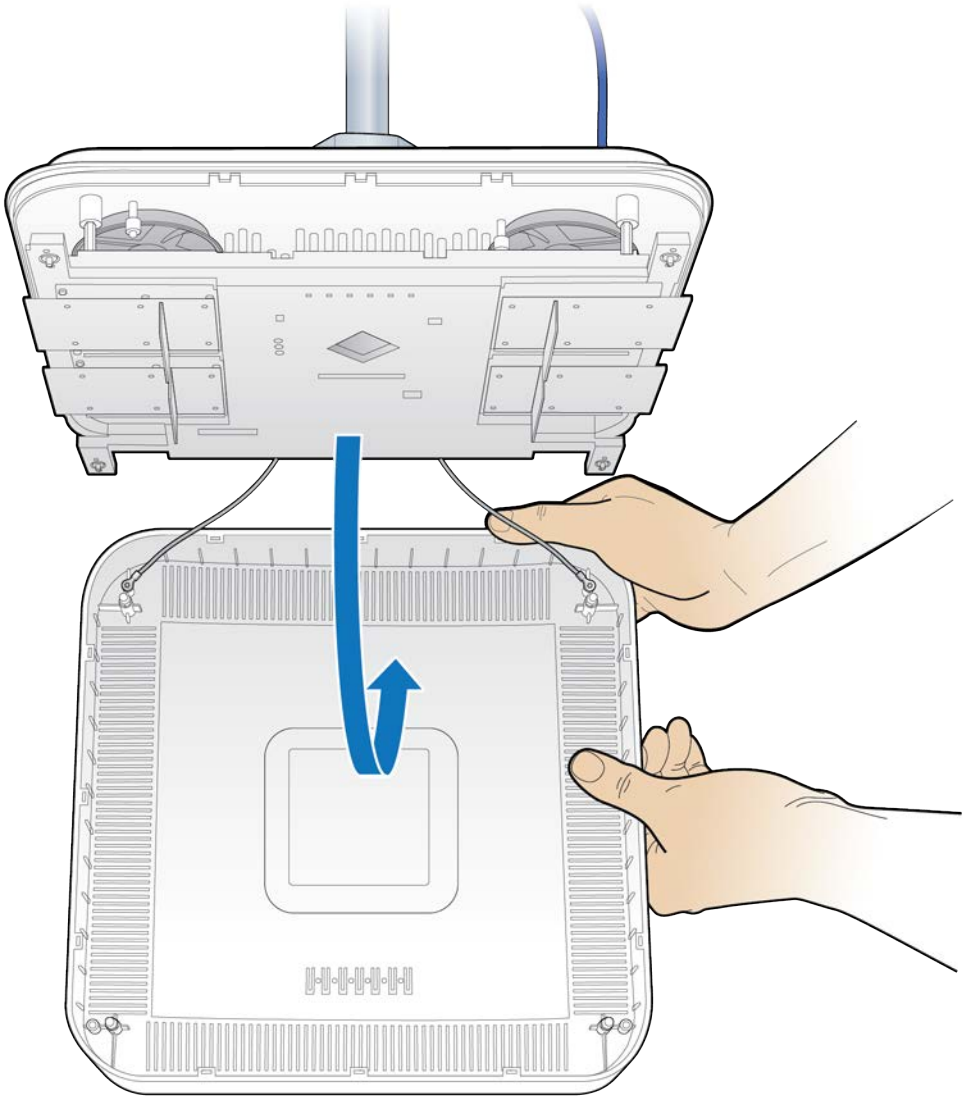

12 Connect Ethernet cable to the MR port on the Radio Point.

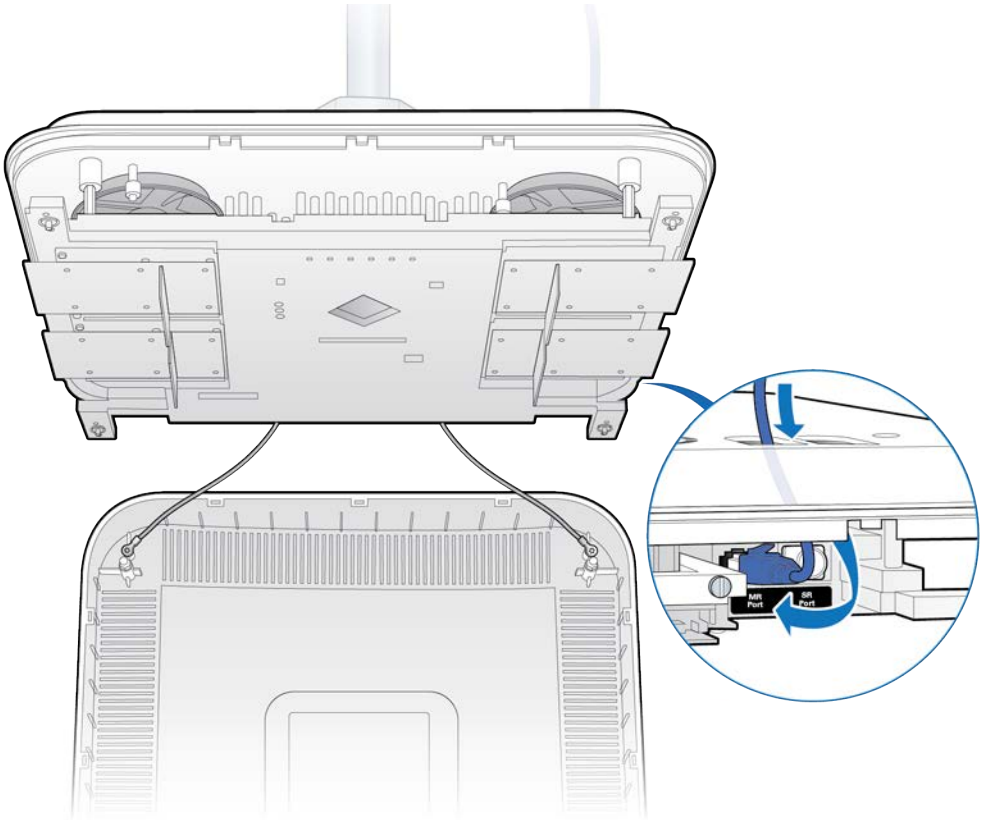

13 Replace plastic cover on the Radio Point.

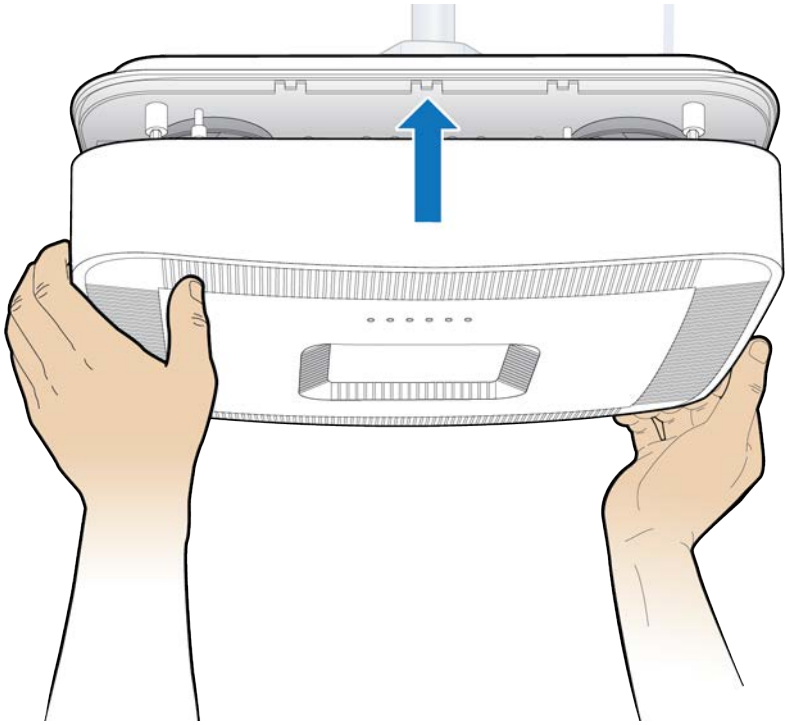

14 Replace the ceiling tile next to the Radio Point.

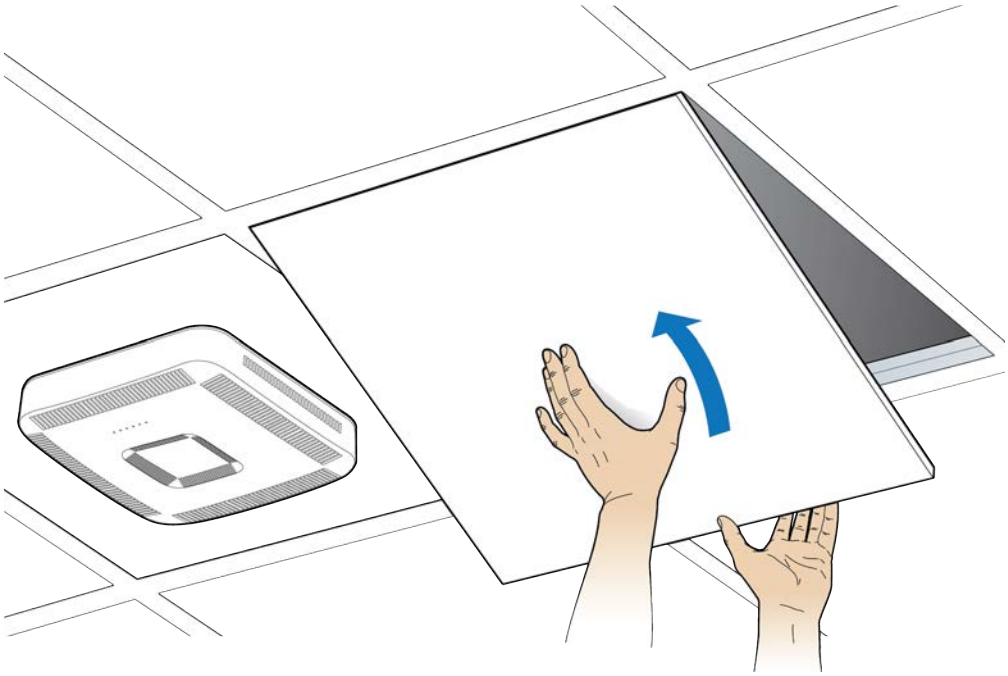

Mounting the Radio Point above the ceiling tile

1 Remove ceiling tile from the overhead.

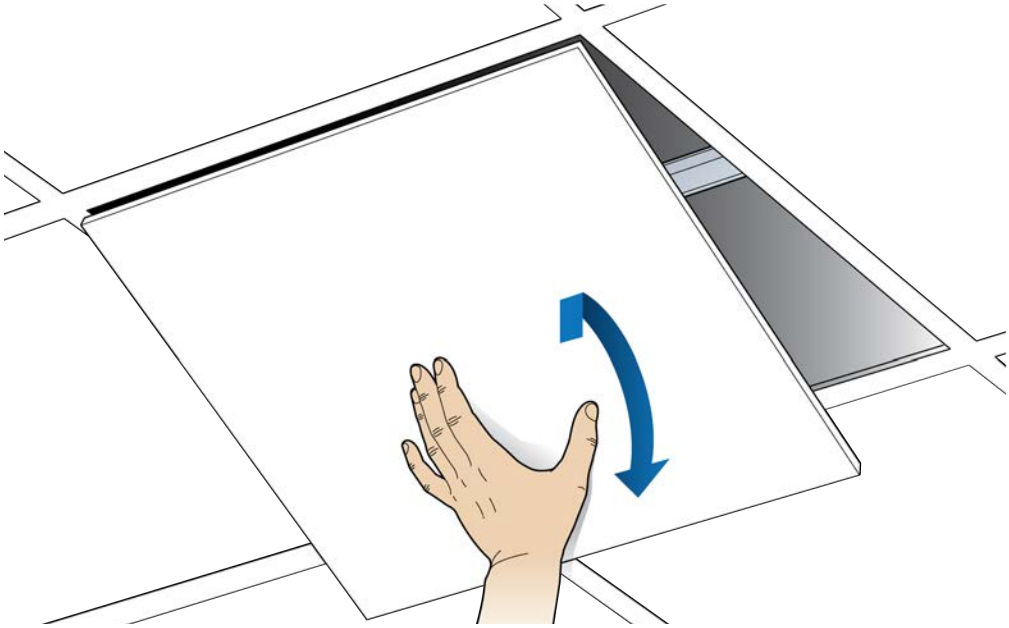

2 Attach the octagon box to the bracket.

NOTE: CommScope recommends an Eaton B-line – BA50A adjustable bracket.

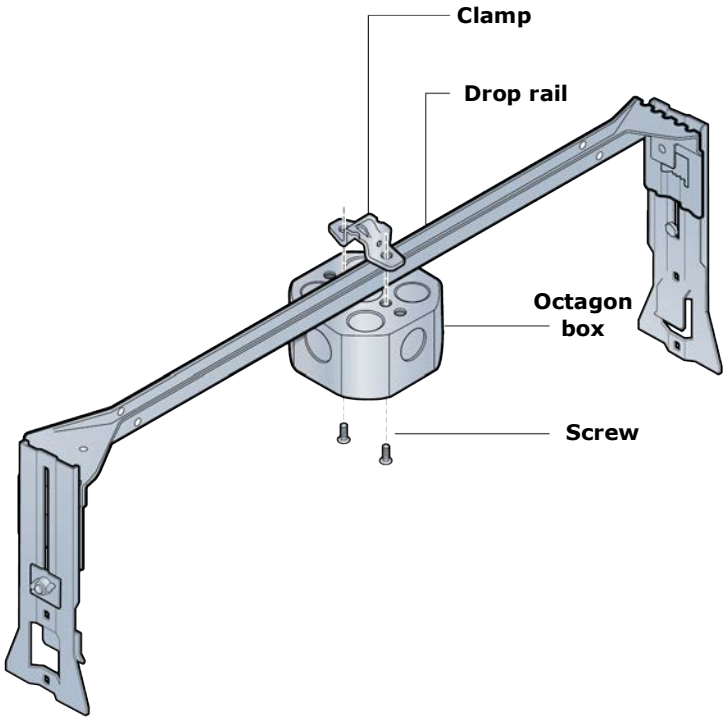

3 Attach the bracket to the mounting plate to the octagon box.

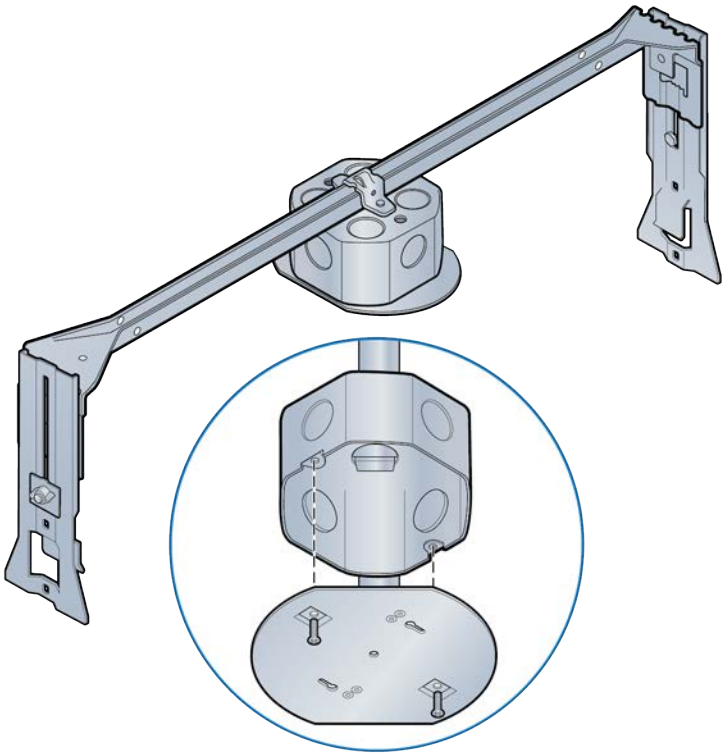

4 Attach plate to the Radio Point.

NOTE: Apply thread locking compound to screws prior to installation.

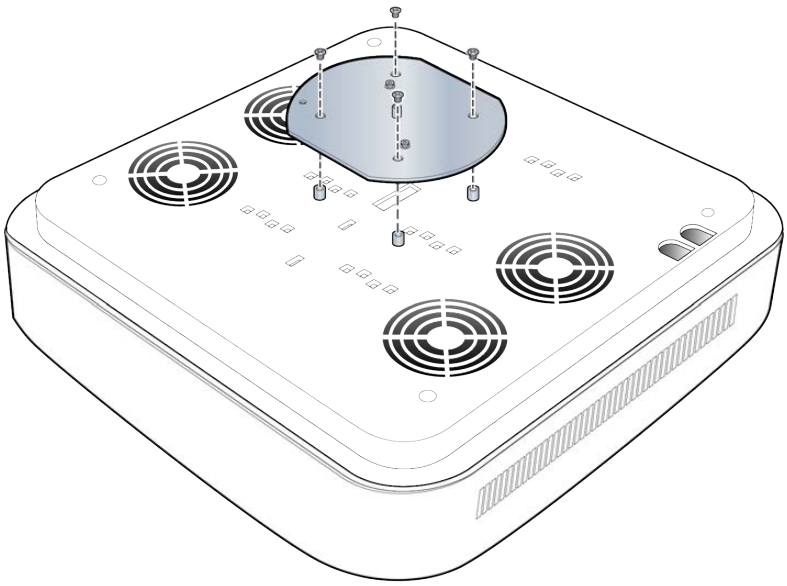

5 Attach the Radio Point to the octagon box mounting plate.

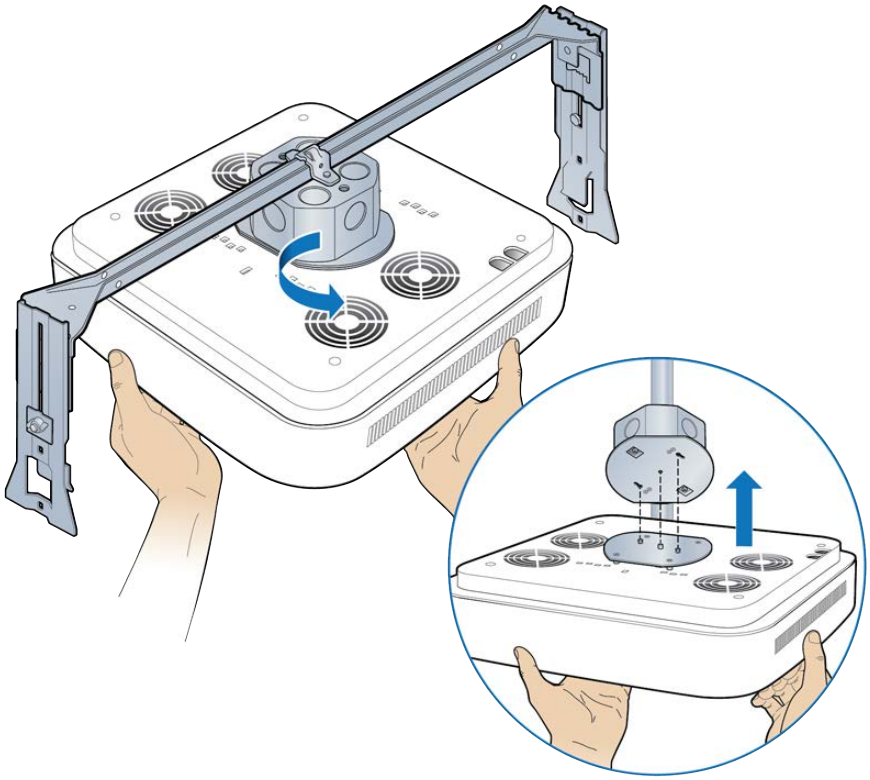

6 Install drop rail above the ceiling tile.

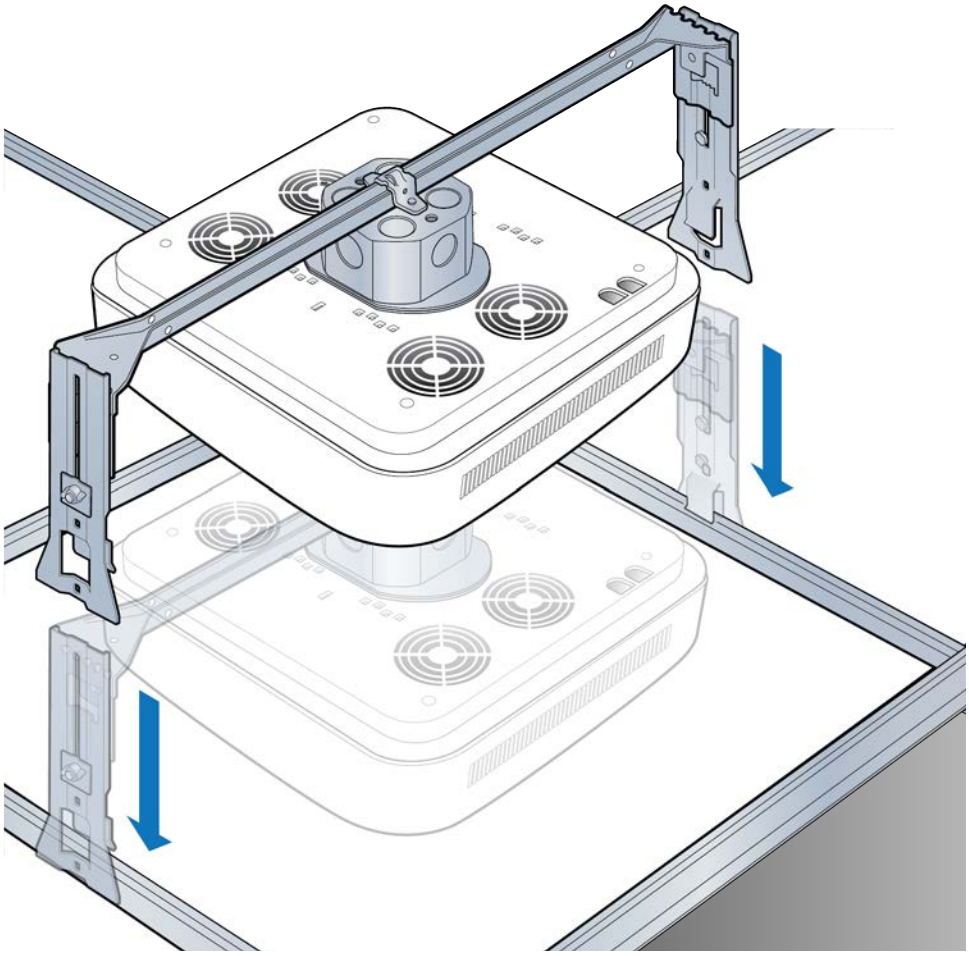

7 Remove the cover from the RP.

NOTE: The cover is attached to the RP with two lanyards.

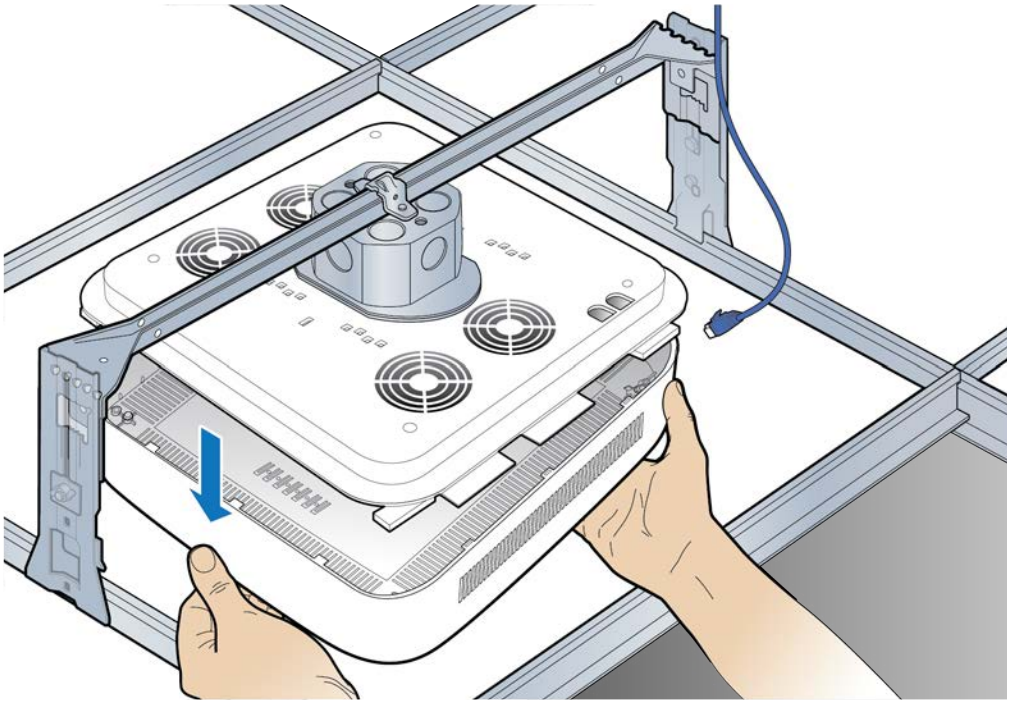

8 Connect the Ethernet cables to the Radio Point MR port.

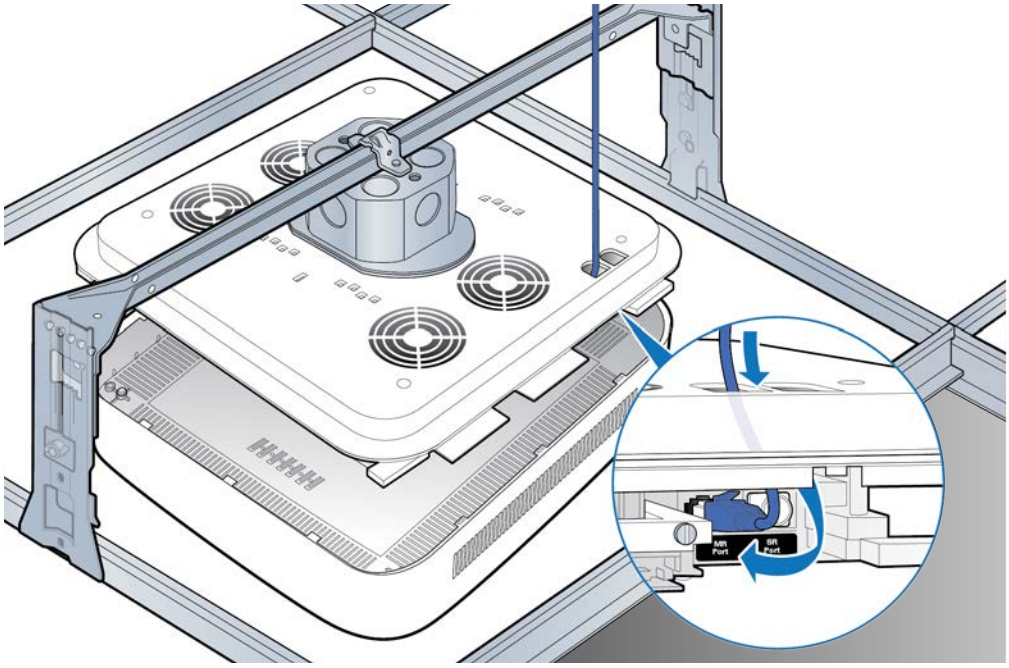

9 Replace the cover on the Radio Point.

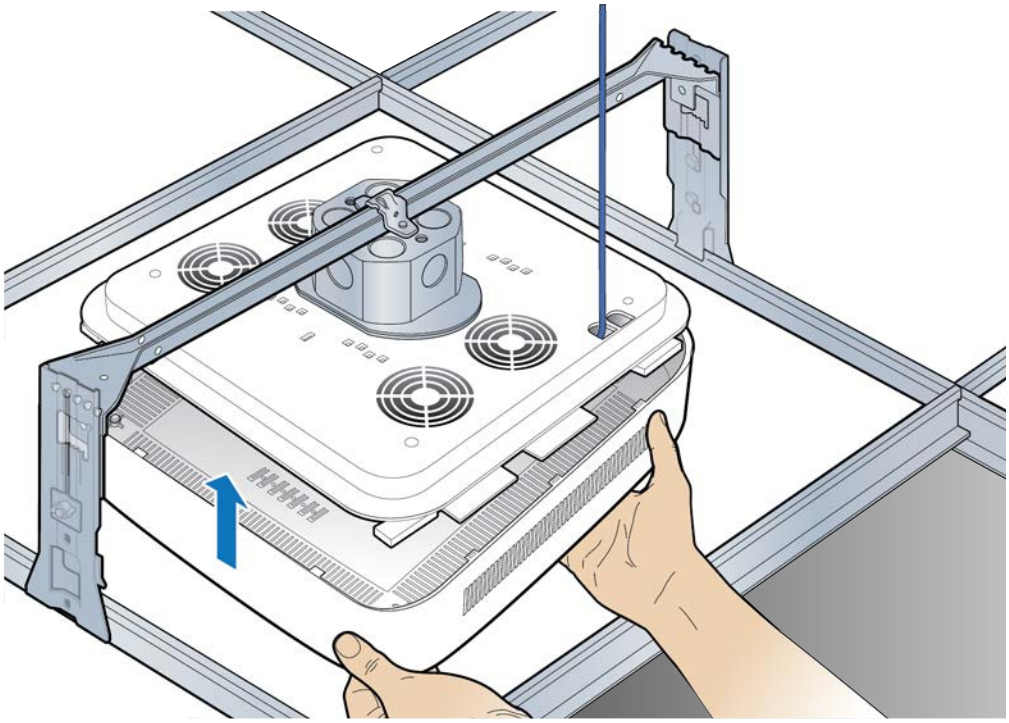

NOTE: The minimum clearance for cooling is 3 inches.

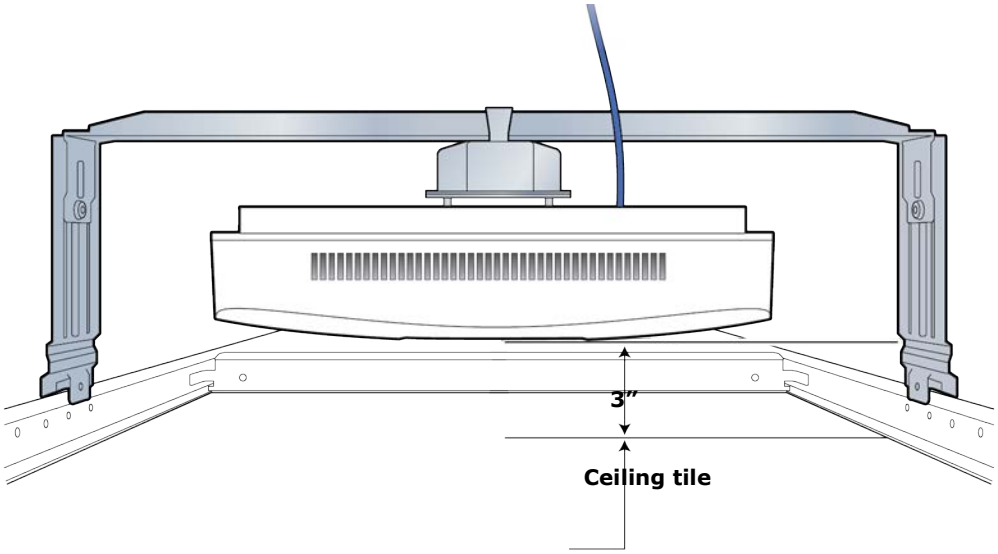

10 Replace the ceiling tile.

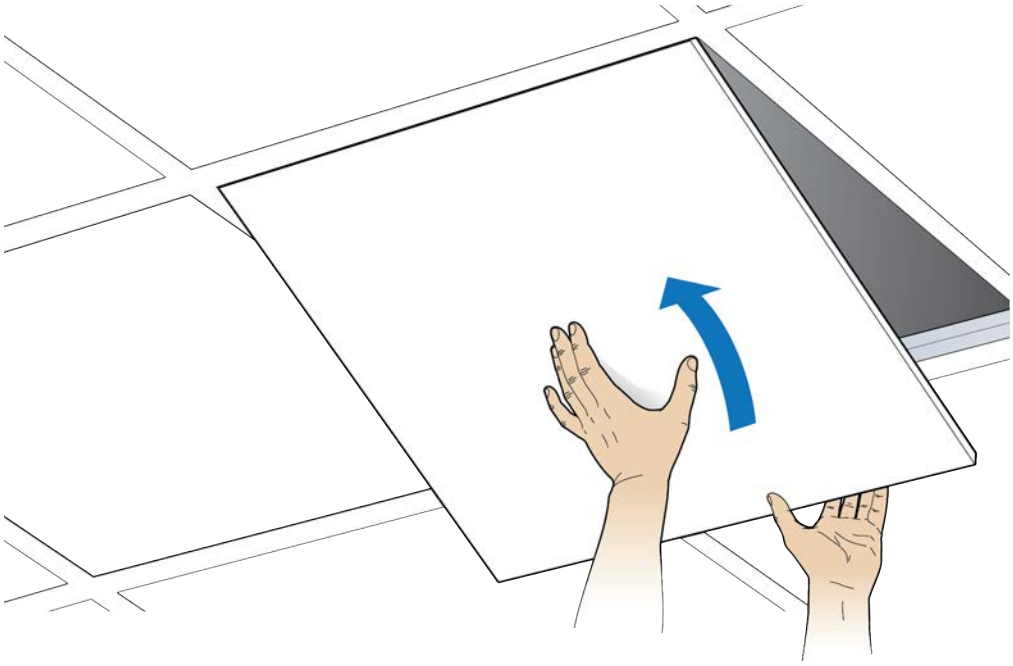

Flown mount

The Radio Point can be flown mounted on the end of a rod. This configuration is used for building where there are no drop ceilings.

Mounting the Radio Point (RP) in the flown configuration requires the following hardware provided by CommScope in the mounting kit:

- Radio Point plate and screws
- 4" octagon box, 1-1/2" deep with 1/2" side cutouts

  NOTE: Remove the top, middle cutout.

- Clamp and screw – this hardware is not required for the flown mount option

Figure 5-3. CommScope flown mount kit contents

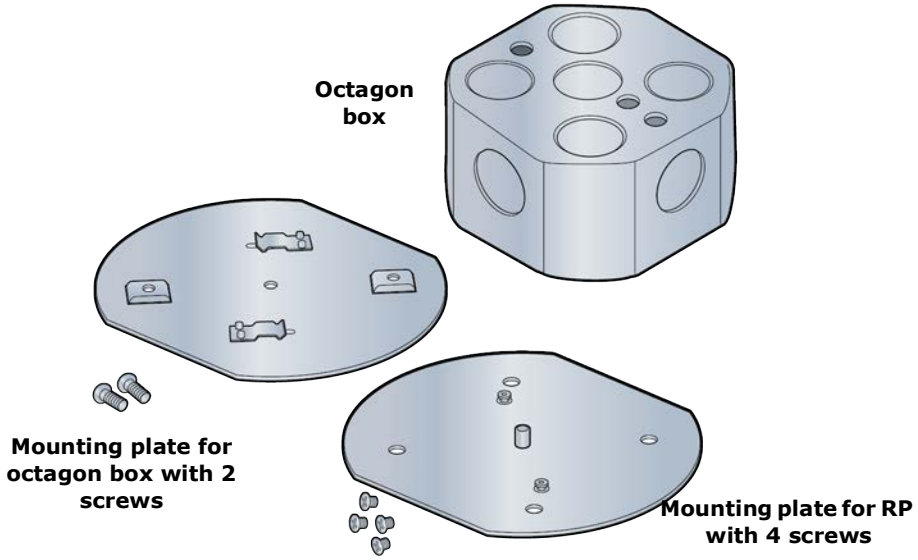

Mounting the Radio Point (RP) in the flown configuration requires the following hardware provided by the system integrator:

- Rod, 3/8-inch threaded
- Nut
- Lock nut, nylon
- Flat washers

Flown mount installation

1. Attach the threaded, 3/8-inch rod, cut to the required length, to the ceiling.
2. Install the nut and a flat washer on the rod.
3. Slide the octagon box on the rod and install a flat washer and the nylon lock nut.

   NOTE: Be sure the bracket is tight between the nuts and there is enough clearance at the end of the rod to attach the bracket to the Radio Point.

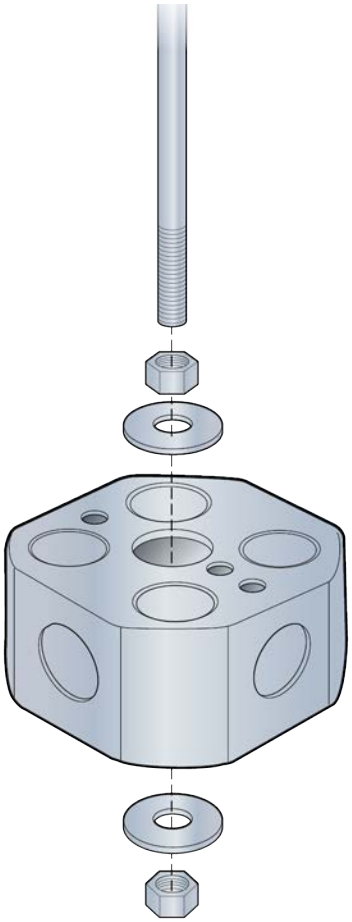

4 Attach plate to octagon box.

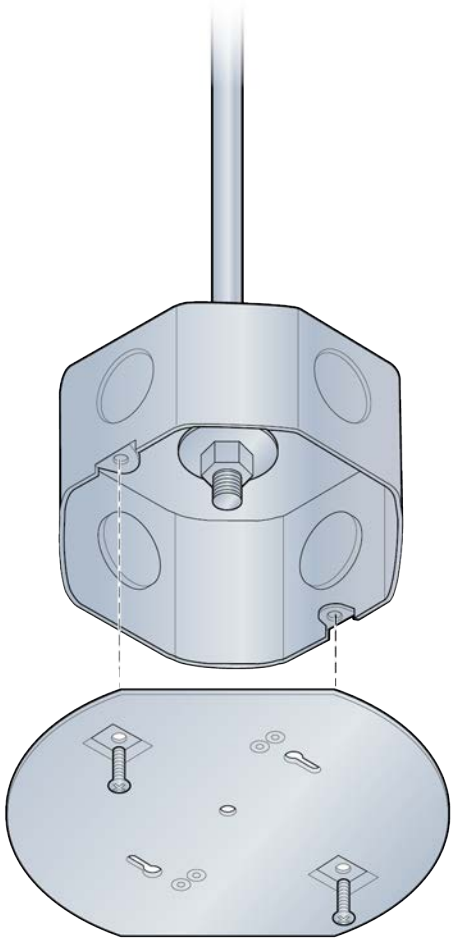

5 Attach the mounting plate to the Radio Point.

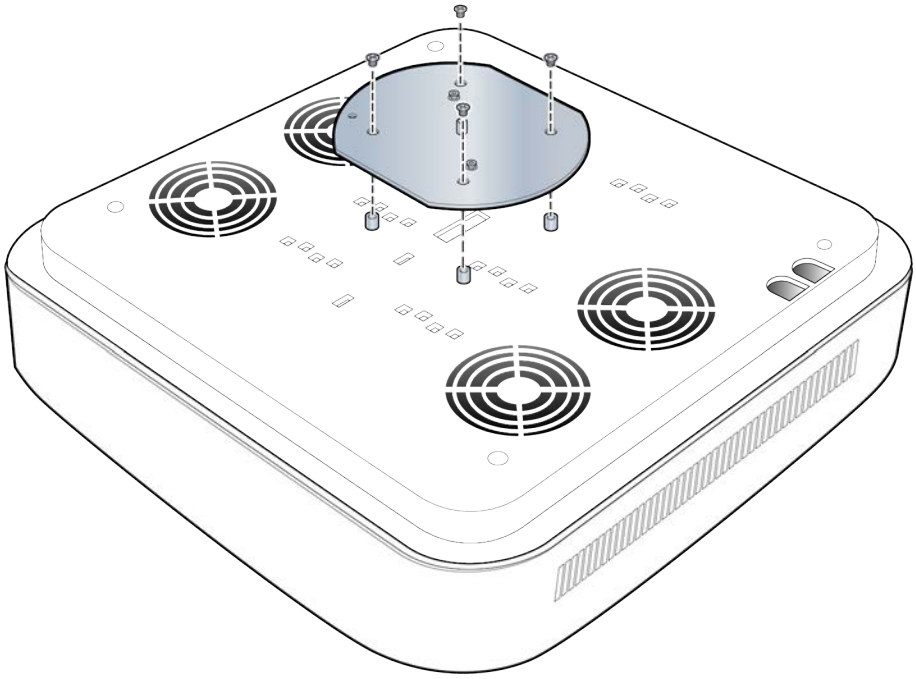

6 Attach the Radio Point to the octagon box.

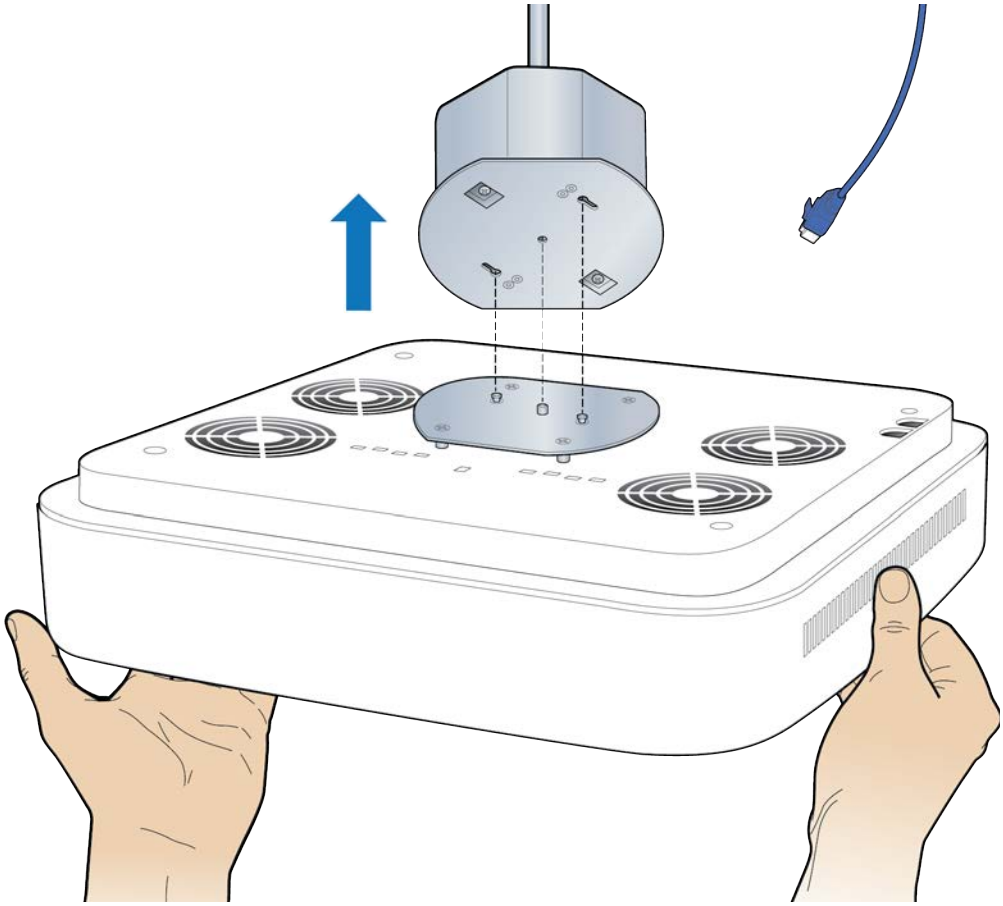

7 Remove the cover from the RP.

NOTE: The cover is attached to the RP with two lanyards.

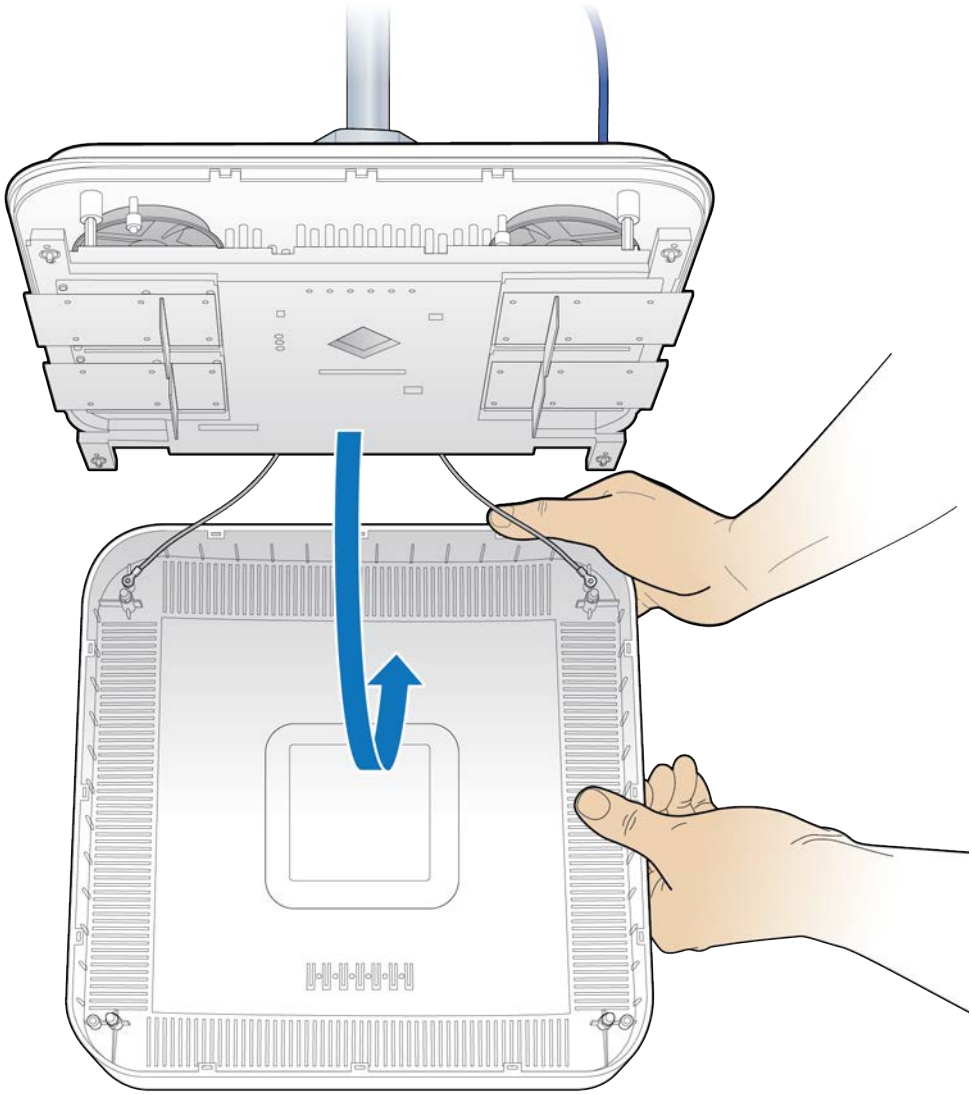

8 Connect the Ethernet cable to the Radio Point MR port.

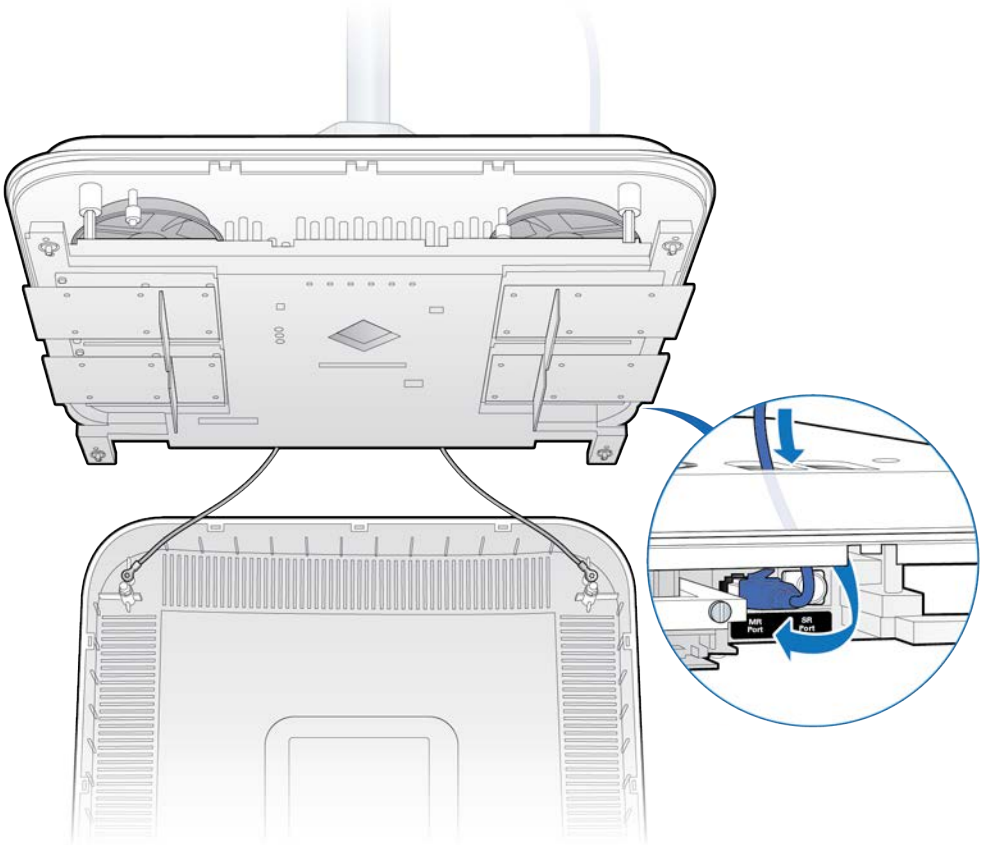

9 Attach the plastic cover to the Radio Point.

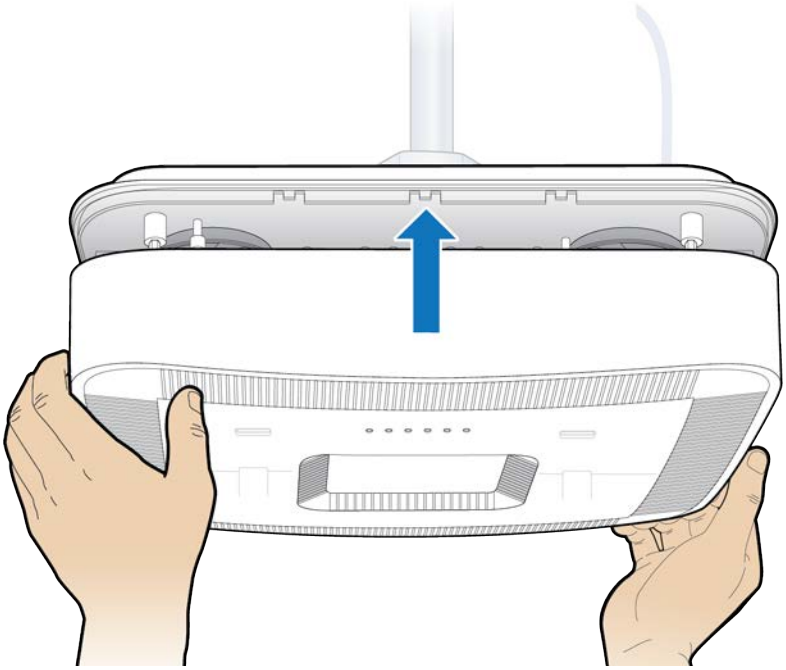

Installation is complete.

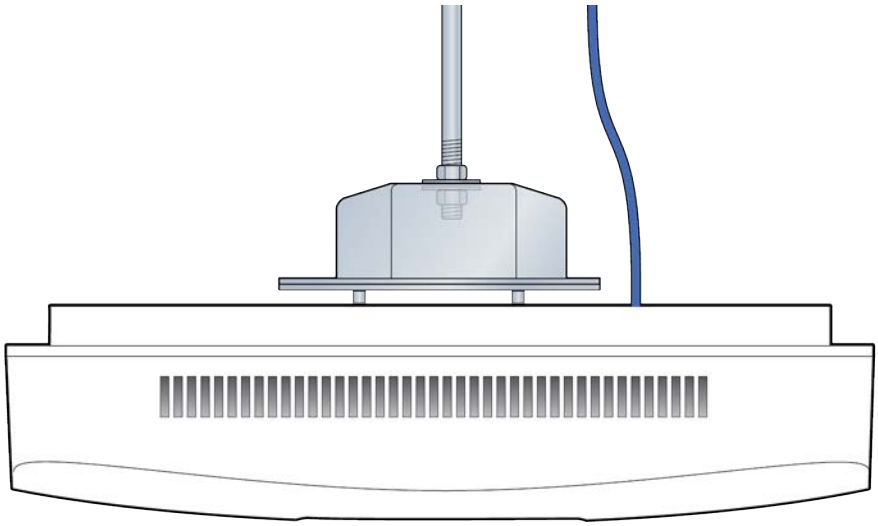

Pole mount

The Radio Point can be pole mounted. This configuration is used for building where there are no drop ceilings.

Mounting the Radio Point (RP) on a pole requires the following hardware provided by CommScope in the mounting kit:

- Mounting bracket
- Screws

Figure 5-4. Mounting bracket kit contents

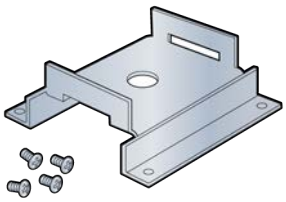

Mounting the Radio Point (RP) on a pole requires the following hardware provided by the system integrator:

- Adjustable clamp at least 2 inches larger than the circumference of the pole

Pole mount installation

1 Attach the bracket to the Radio point.

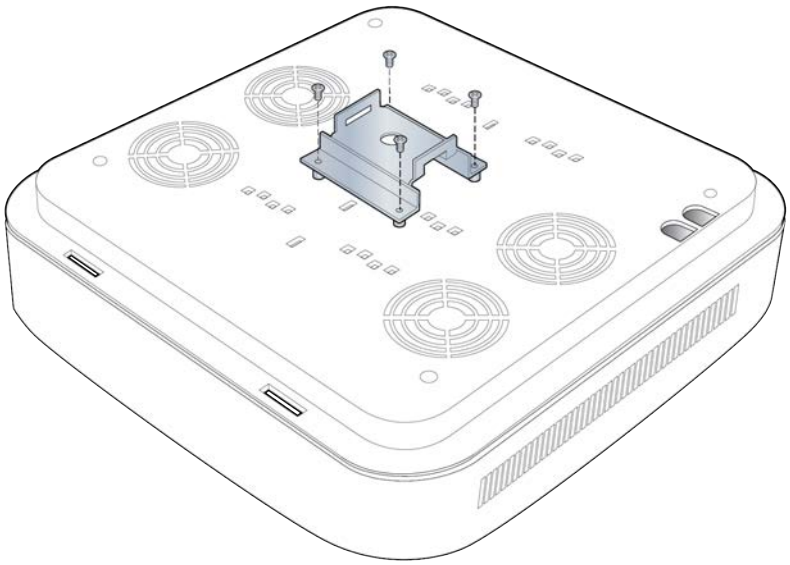

2. Slide the adjustable clamp through the slots on the Radio Point bracket.
3. Wrap the clamp around the pole and tighten the clamp screw to secure the Radio Point to the pole.

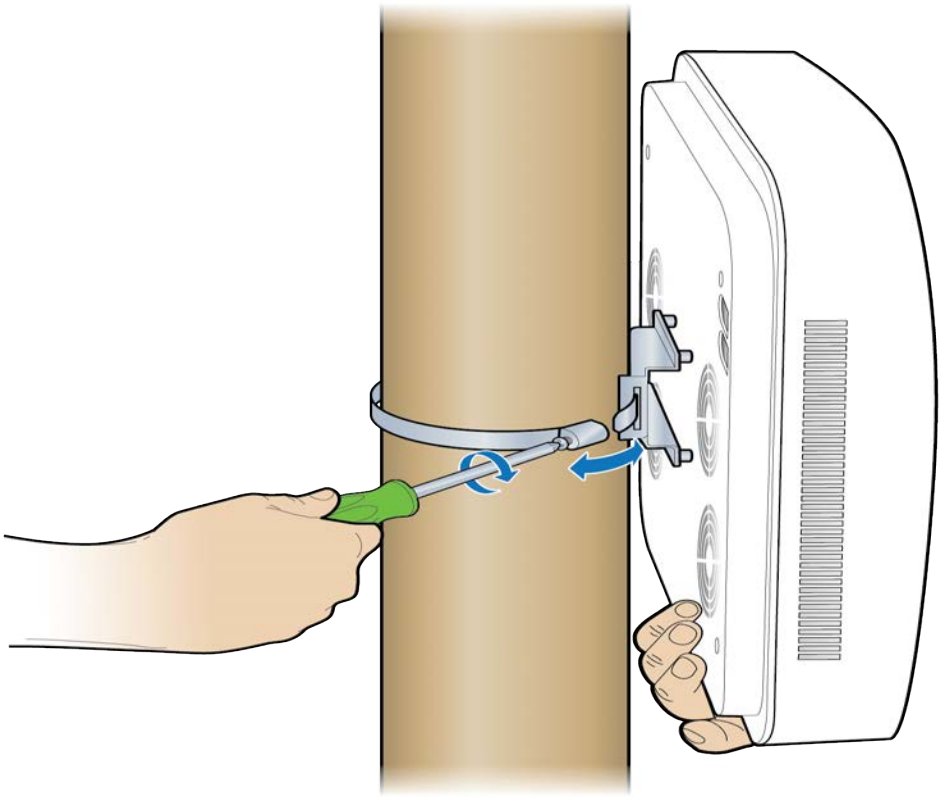

4 Remove the cover from the RP.

NOTE: The cover is attached to the RP with two lanyards.

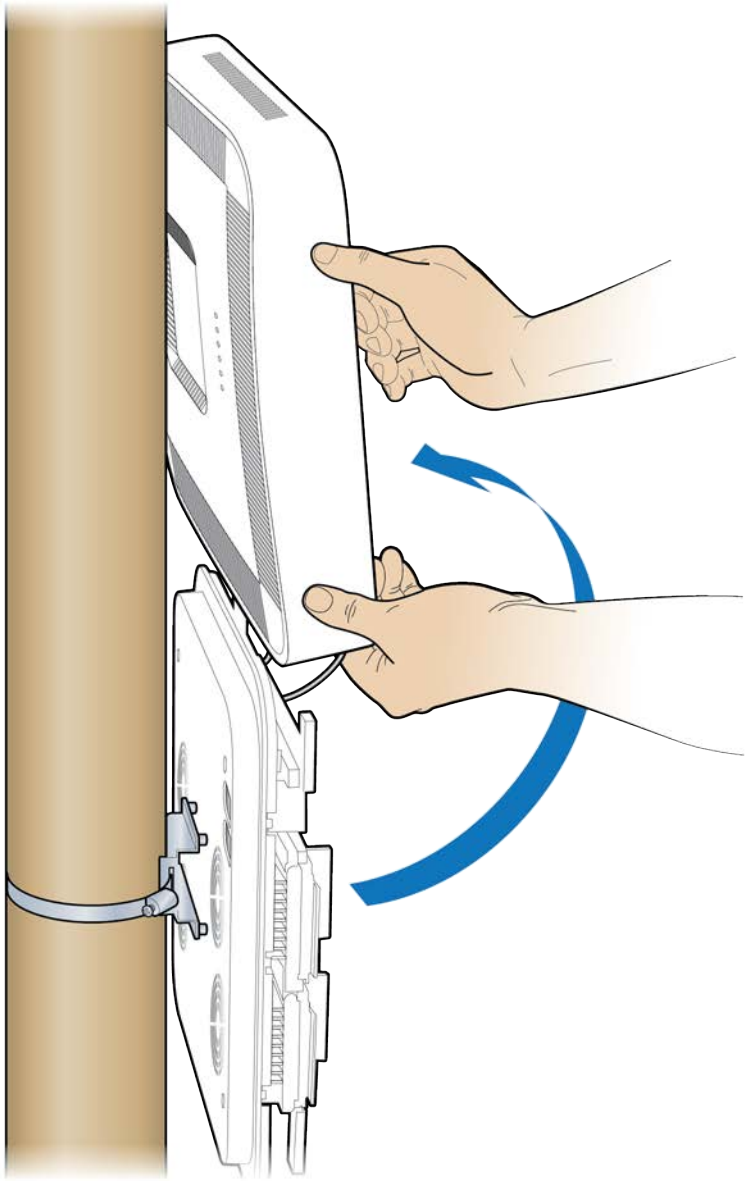

5 Connect the Ethernet cable to the Radio Point MR port.

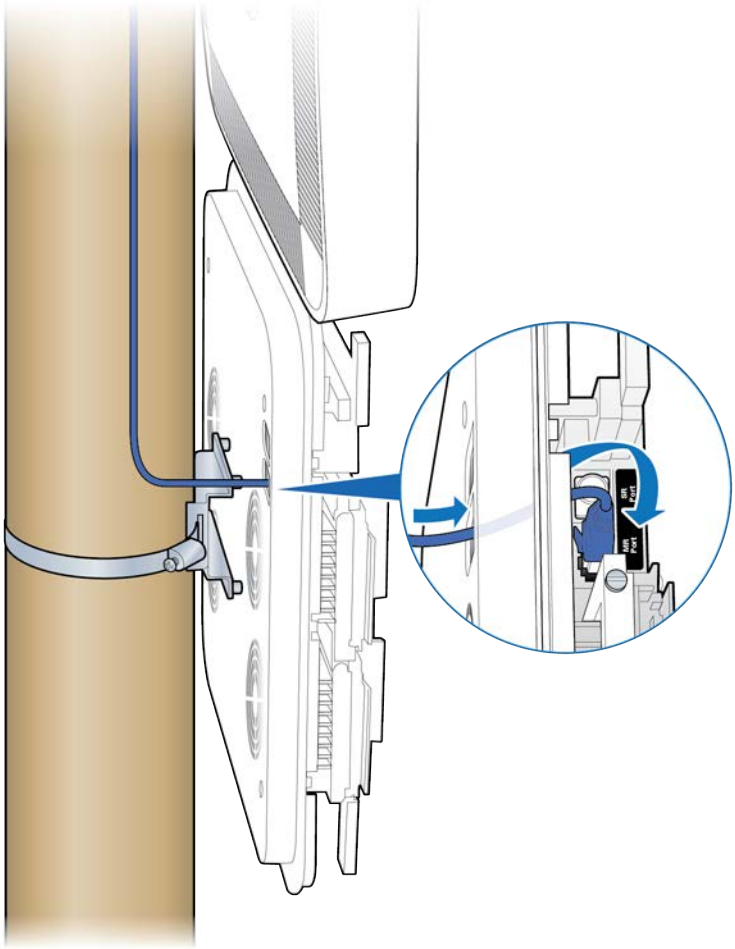

6 Replace the plastic cover on the Radio Point.

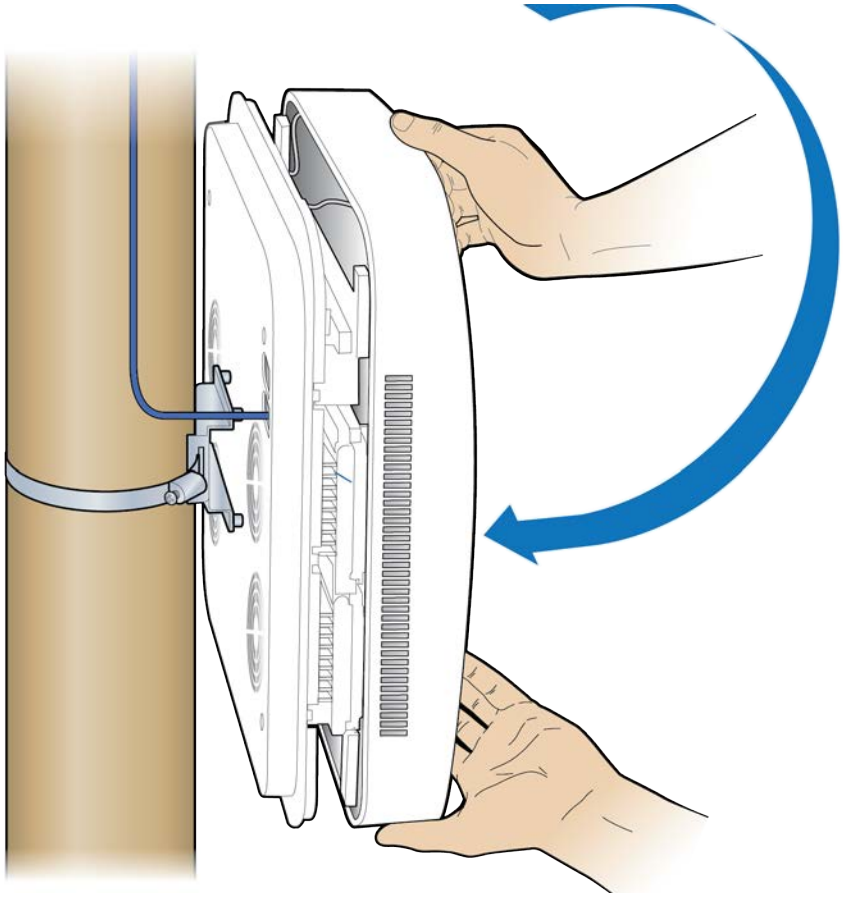

Installation is complete.

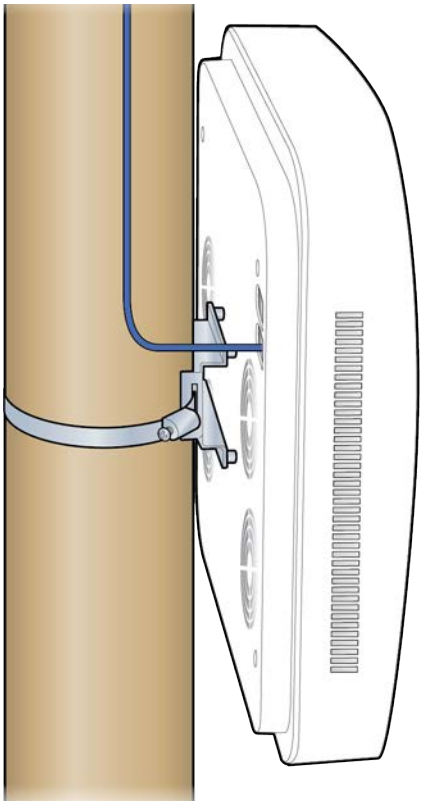

Chapter 6

RP5100r installation

This chapter describes installing Rugged Radio Points on poles and walls.

Rugged Radio Point installation overview	6-2
Pole mount installation	6-4
Wall mount installation	6-10

Rugged Radio Point installation overview

The Rugged Radio Point (RP) ships with the following hardware:

- Radio Point
- Mounting plate
- Mounting bolts (M8 Hex)
- RJ45, IP67 connector for CAT 6A cables

Figure 6-1. Hardware provided by CommScope

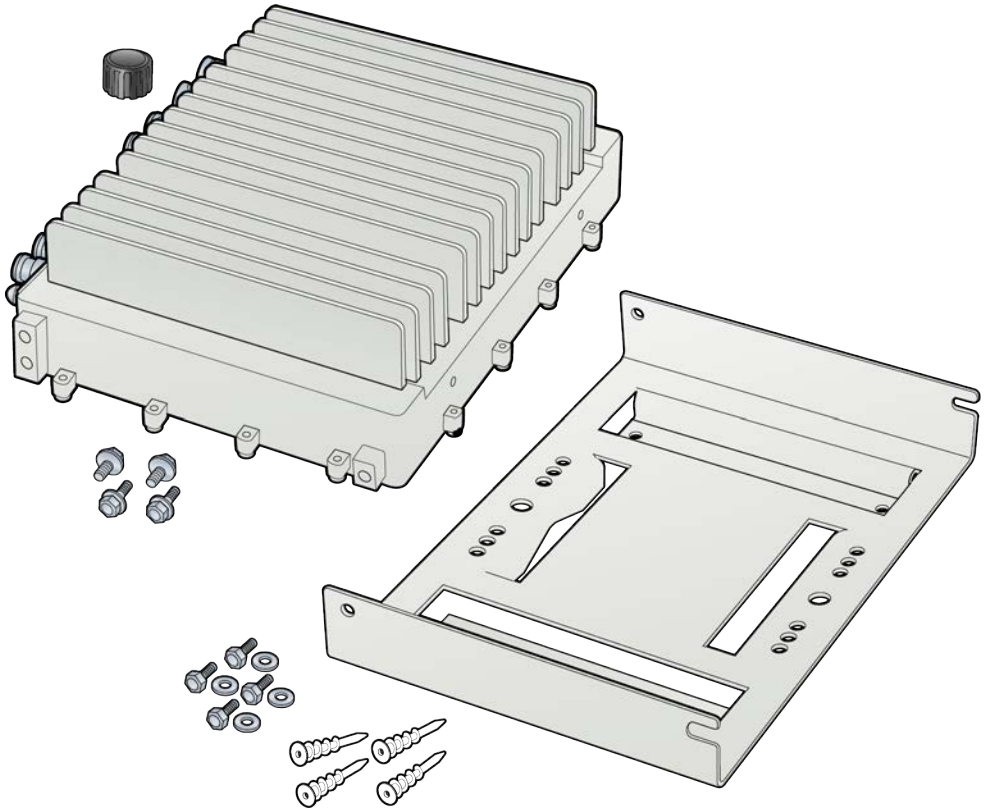

NOTE

An M8 hex wrench is required to install mounting bolts.

Mounting the Radio Point (RP) on a pole requires the following hardware provided by the system integrator:

- Two U bolts
- Four nuts

- RJ45, IP67 connector for CAT 5E
- Ethernet surge protector, as required by local code (for example, DTK-MRJPOEX or DTK-MRJPOES)

NOTE

If the MR port is connected to a switch that does not provide IEEE802.3bt, type-4 PoE power, the SR port can be used to provide power with a PoE++ injector. In this case, the installer needs to provide a CAT 5E – MPN 17-10044 connector to connect the RJ45 to the SR port. For more information, see *ONECELL® Network Planning Guide, v6.5* (M0306AN).

Figure 6-2. Hardware provided by the systems integrator

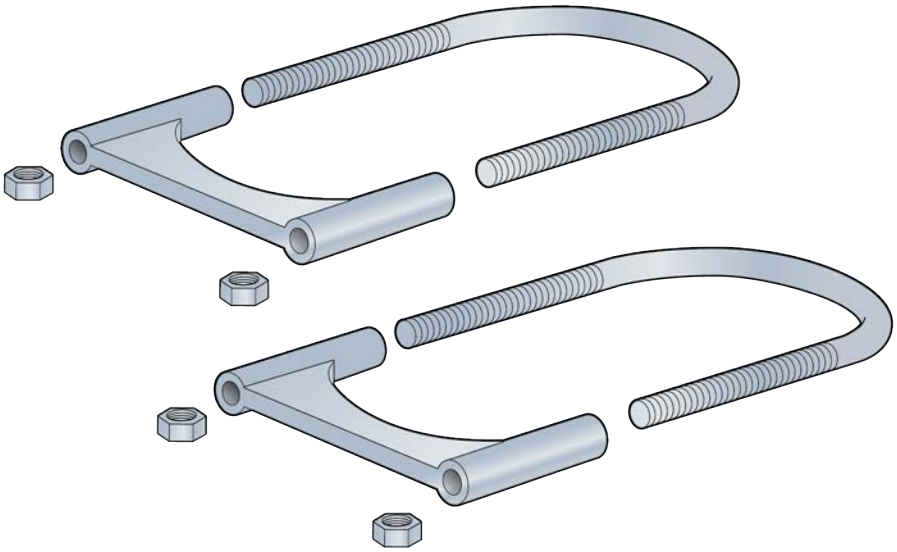

Mounting the Radio Point (RP) on a wall requires the following hardware provided by the system integrator:

- Four molly screws capable – 50 lb (23 kg) minimum rating

NOTE

Once the Radio Point is installed and the powered on, it may take up to 20 minutes for the frequency to stabilize and lock.

Before connecting the Ethernet cables to the RP, terminate the RP end of the Ethernet cable with the RJ45, IP67 connector.

Figure 6-3. RJ45, IP67 connector assembly

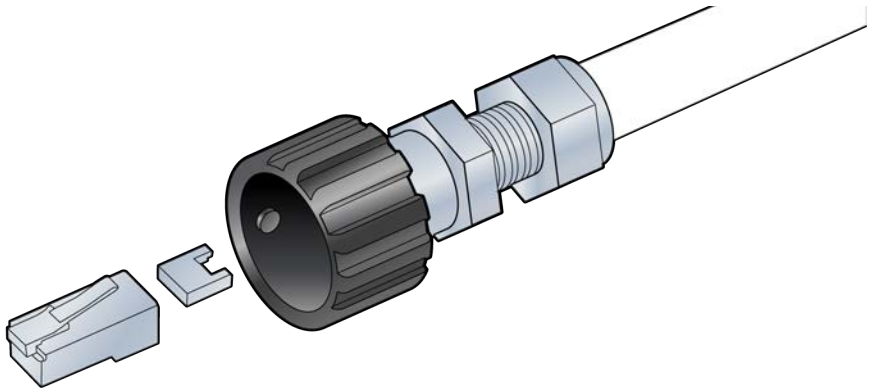

Antenna port label

In a multi operator deployment, each operator can connect their own antenna for the Bands and slots they intend to use. This feature allows an operator to reserve the Band/Radio module slot on an outdoor RP5100r to be used for or by a Baseband Controller when outdoor RP5100s are deployed in an enterprise with multiple Baseband Controllers (up to 4).

The antenna port label shows the antenna ports, internal slot number and supported band. These parameters are configured at the factory.

Figure 6-4. Antenna port label

Pole mount installation

There is vertical orientation for pole mount installations

NOTE

The minimum pole diameter requirement is 4" (102mm).

Vertical pole mount

1. Slide the two U bolt clamps onto the pole and secure the RP mounting plate to the clamps with four nuts.

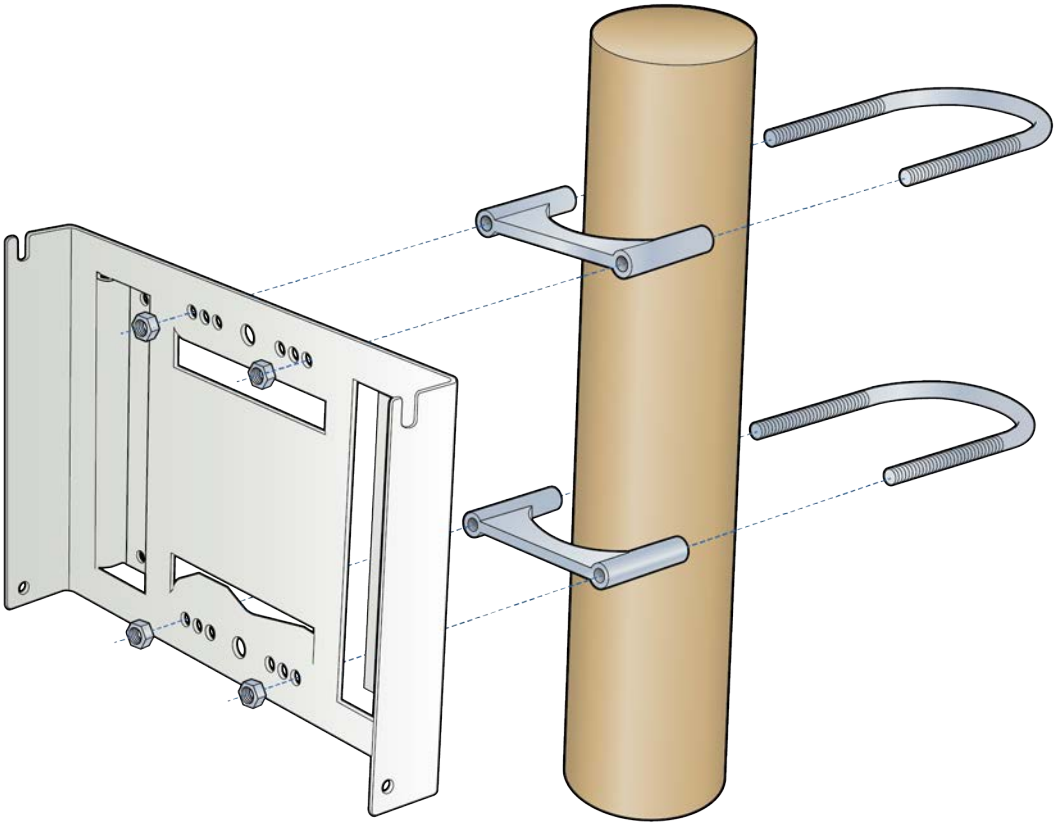

2 Insert two screws into the upper holes on opposite sides of the RP.

Required orientation is with connectors at the bottom of the RP

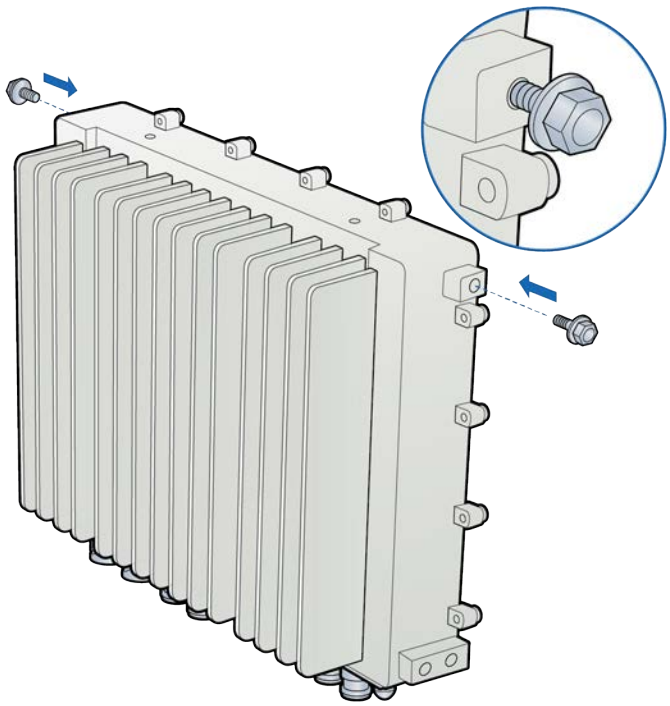

3 Hang the RP to the mounting bracket using the installed screws.

CAUTION

Ensure that the RP is oriented correctly with all connectors at the bottom of the RP.

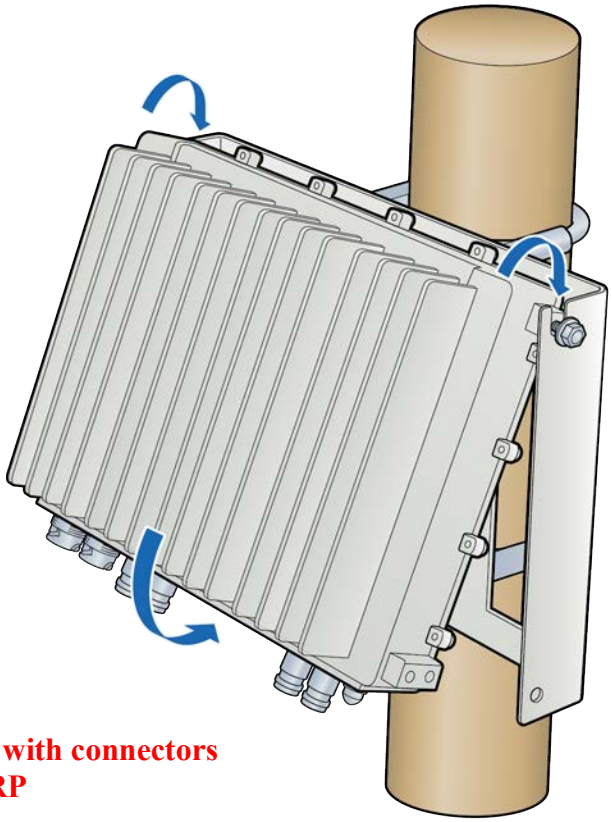

Required orientation with connectors at the bottom of the RP

4 Align holes at bottom location of bracket. Insert and tighten the bottom screws through the plate hole into both sides of the RP. Be sure that all four screws are tightened.

NOTE: The torque requirement for the mounting screws is 20-21 in-lbs.

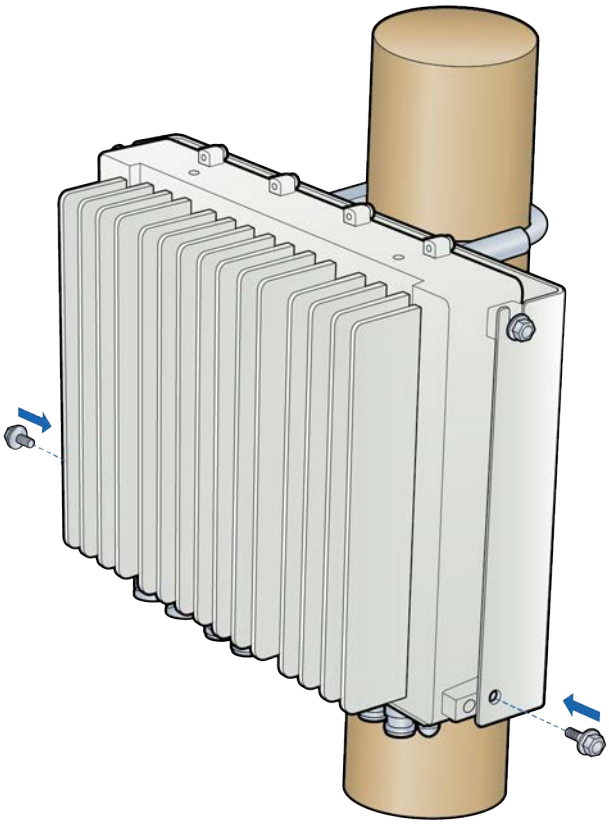

5 Connect the antenna cables on the bottom of the RP.

6 Connect the Ethernet cable RJ45 end to the bottom of the RP to the MR port.

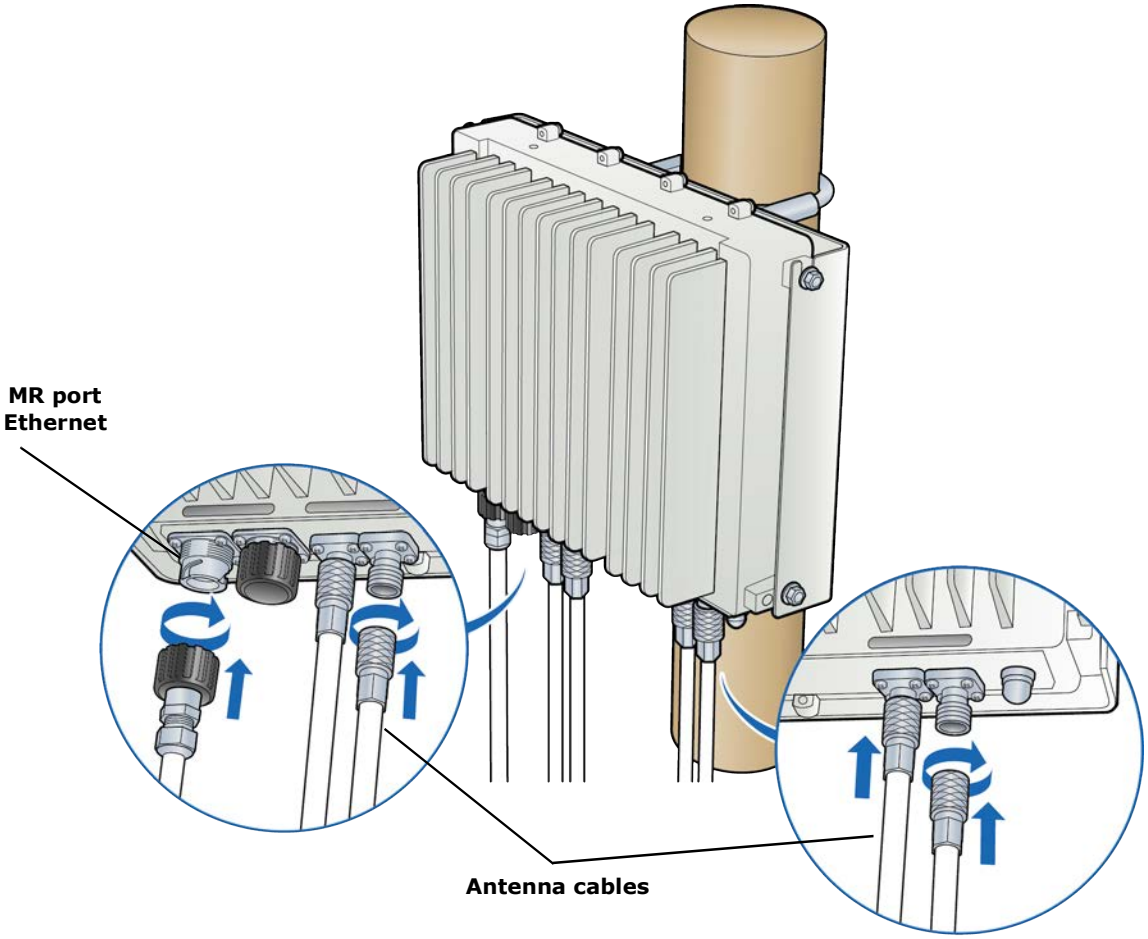

Wall mount installation

1 Drill four holes in the wall using the mounting plate to determine the hole locations. Mount the backplate on the wall with four molly screws.

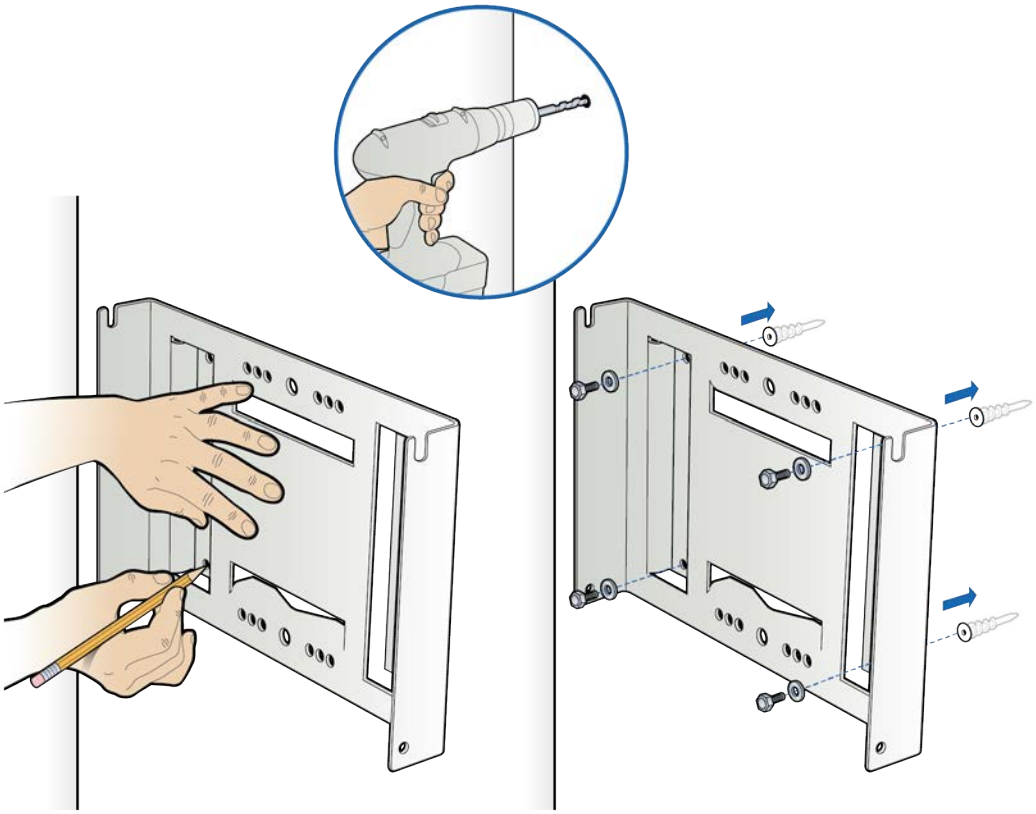

2 Insert two screws into the upper holes on opposite sides of the RP as shown in the drawing below.

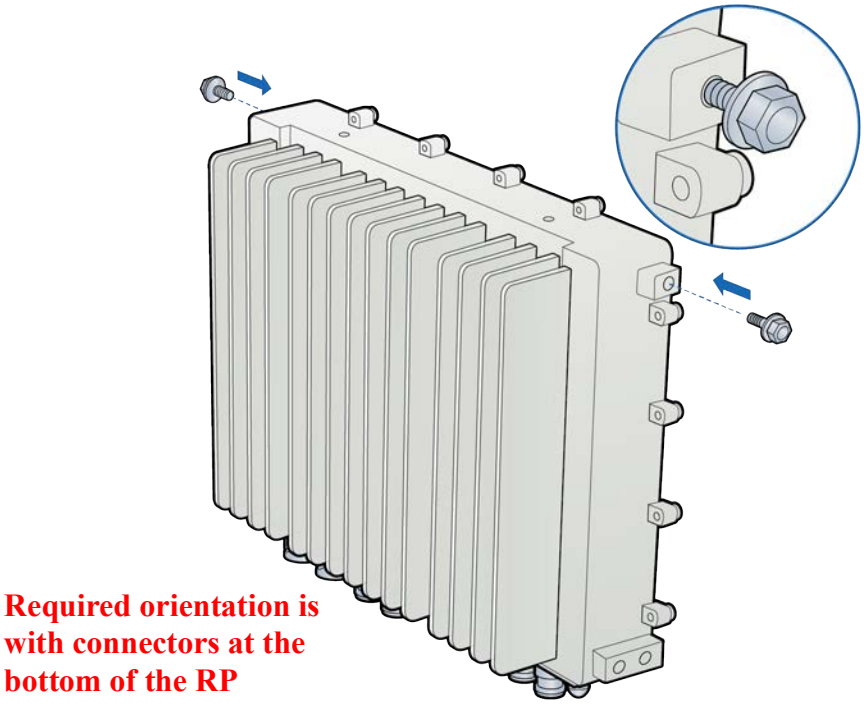

3 Attach the RP to the mounting plate.

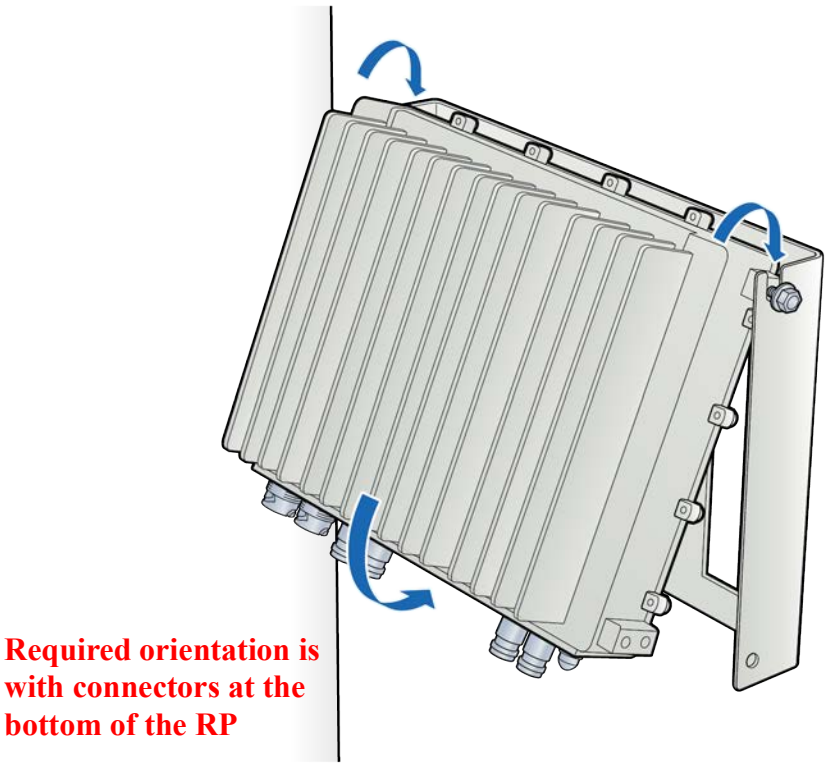

4 Tighten the top screws on the RP and insert and tighten the bottom screws on the RP.

NOTE: The torque requirement for the mounting screws is 20-21 in-lbs.

5 Insert and tighten the bottom screws through the plate hole into both sides of the RP.

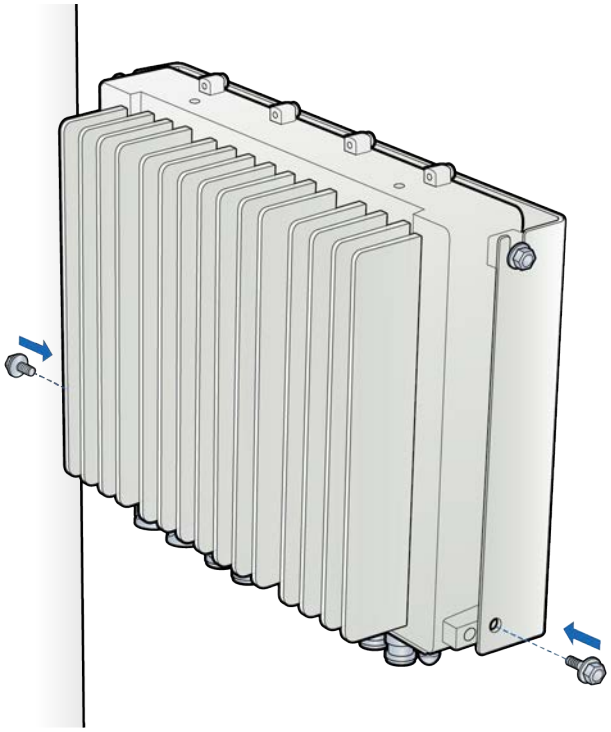

6 Connect the antenna cables on the bottom of the RP.

7 Connect the Ethernet cable RJ45 end to the bottom of the RP to the MR port.

NOTE: Insert the Ethernet surge protection as required by local code (for example, DTK-MRJPOEX or DTK-MRJPOES).

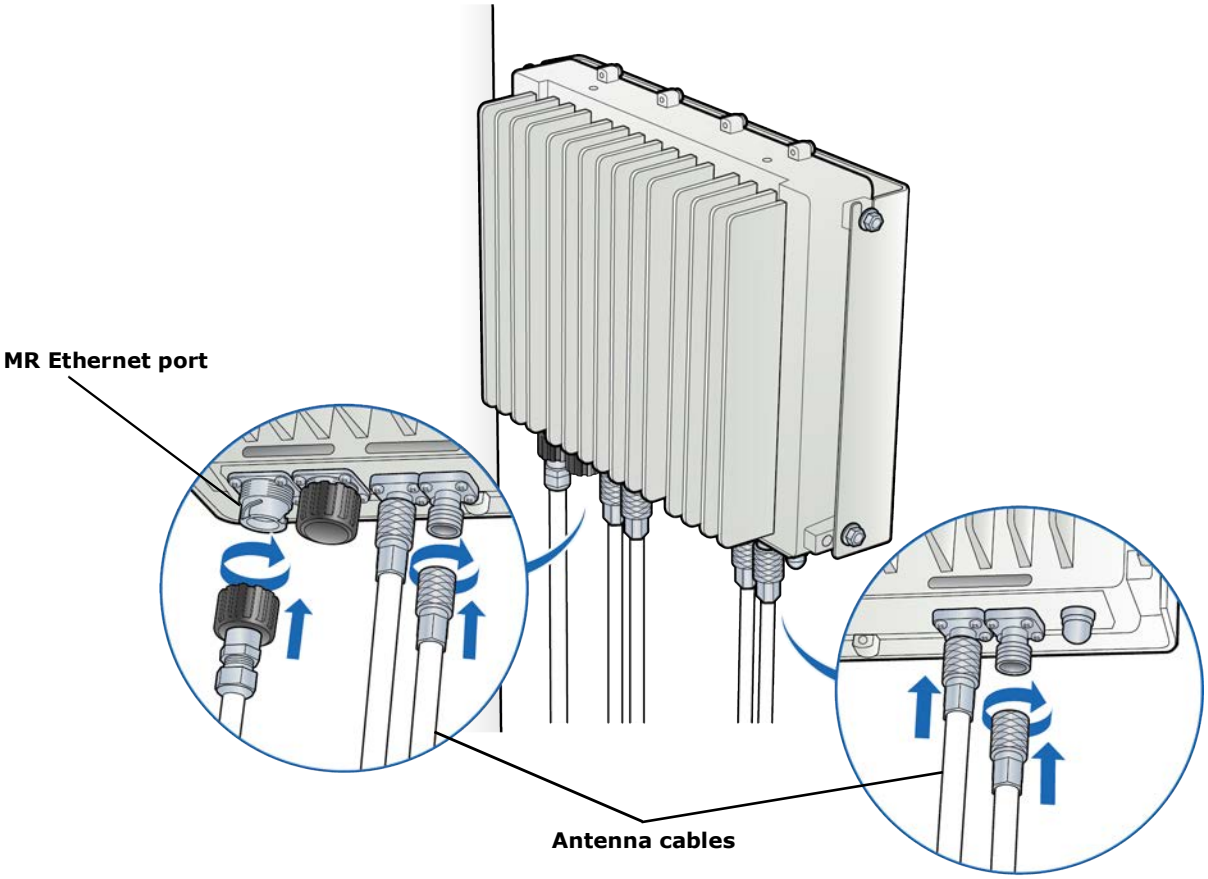

Chapter 7

RP2000 Installation

This chapter describes installing indoor Radio Points on ceiling tiles, above ceiling tiles, on poles and in a flown configuration.

Indoor Radio Point (RP2000) installation overview	7-2
Ceiling mount	7-3
Flown mount	7-17
Pole mount	7-23

Indoor Radio Point (RP2000) installation overview

There are four configurations for installing the Radio Point, which are dependent on the ceiling type.

- Ceiling mount, on tile
- Ceiling mount, above tile
- Flown mount
- Pole mount

NOTE

Once the Radio Point is installed and the powered on, it may take up to 20 minutes for the frequency to stabilize and lock.

Ceiling mount

Mounting the Radio Point (RP) above or on the ceiling tile requires the following hardware provided by CommScope:

- Radio Point mounting plate and 4 screws
- Octagon box mounting plate and 2 screws
- 4" octagon box, 1-1/2" deep with 1/2" side cutouts
- Clamp with screw - not required for flown mount option

Figure 7-1. CommScope ceiling mount kit contents

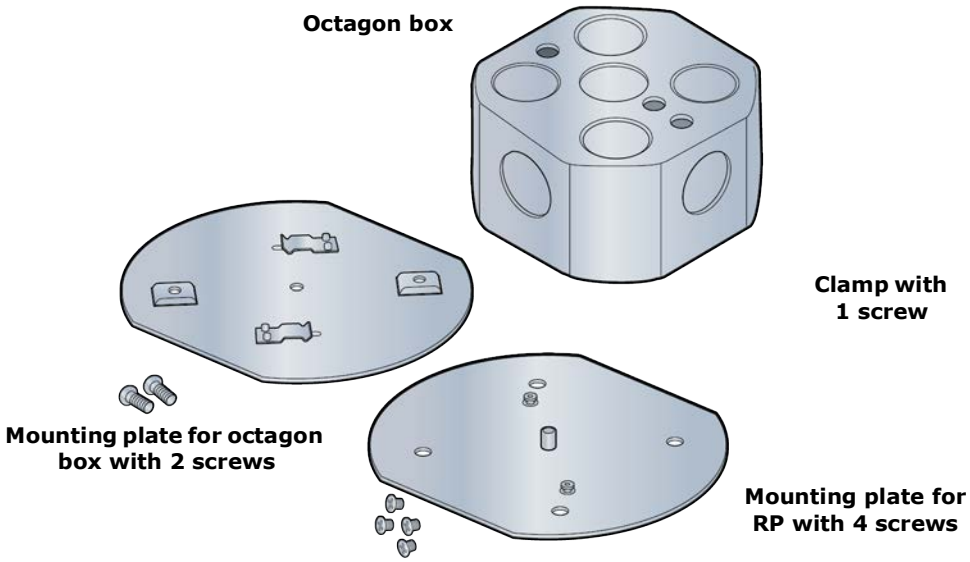

Mounting the Radio Point (RP) above or on the ceiling tile requires the following hardware provided by the systems integrator:

- Drop rail – Eaton B-line BA50 recommended

Figure 7-2. Drop rail, system integrator-provided

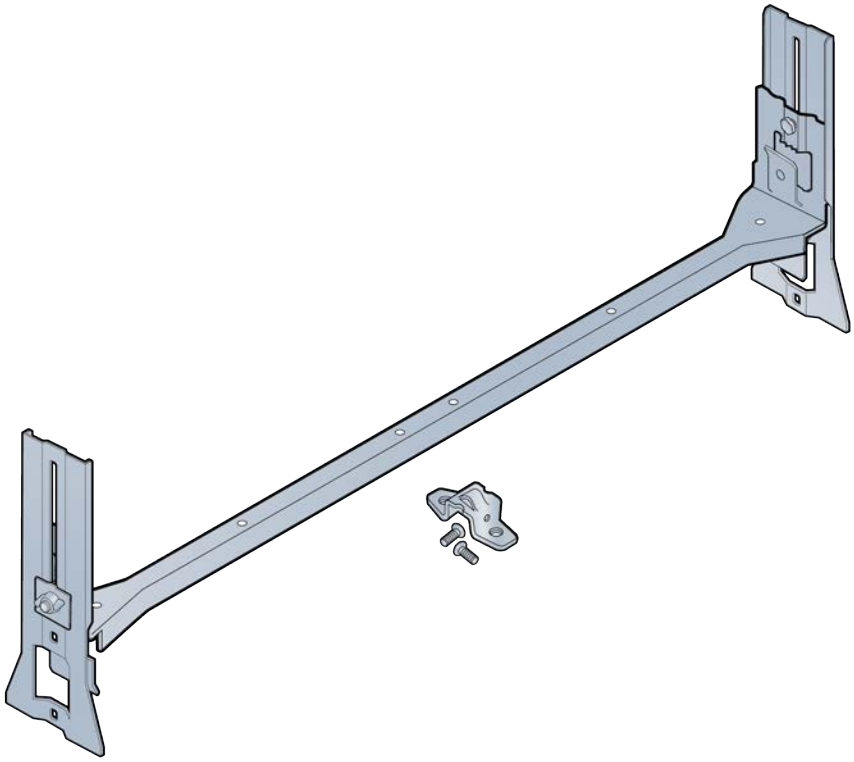

Mounting the Radio Point on the ceiling tile

1 Remove two ceiling tiles from the overhead.

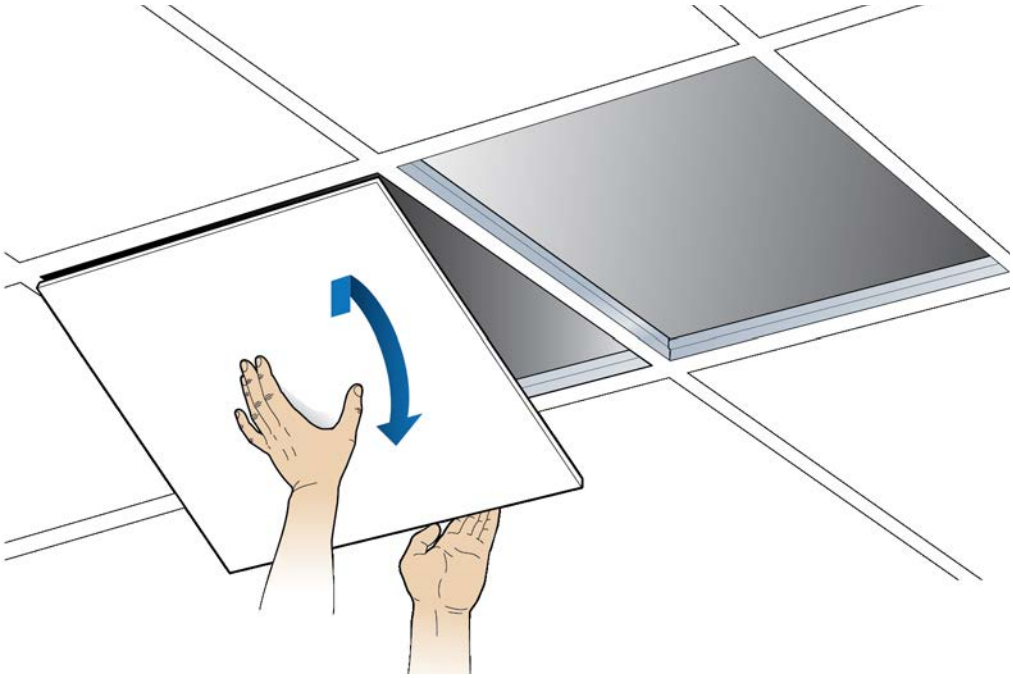

2 Place the octagon box on the tile and trace the outline. Cut the opening.

3 Drill a 1/2-inch diameter hole for the Ethernet cable pass-through.

NOTE: Use a 1-1/2 deep RACO 8125 or equivalent.

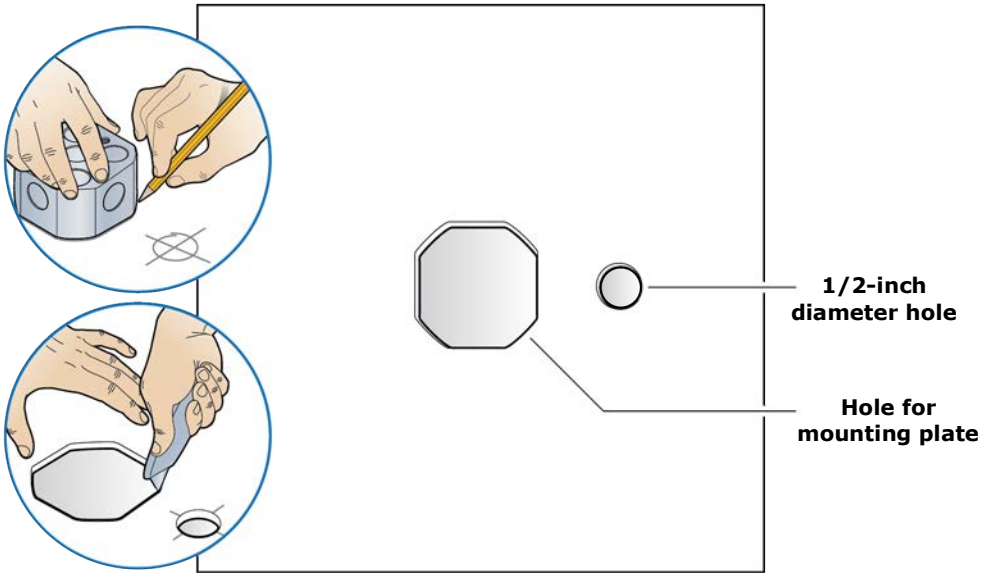

4 Attach the octagon box to the ceiling bracket using a clamp and screw.

NOTE: CommScope recommends the Eaton B-line – BA50 bracket.

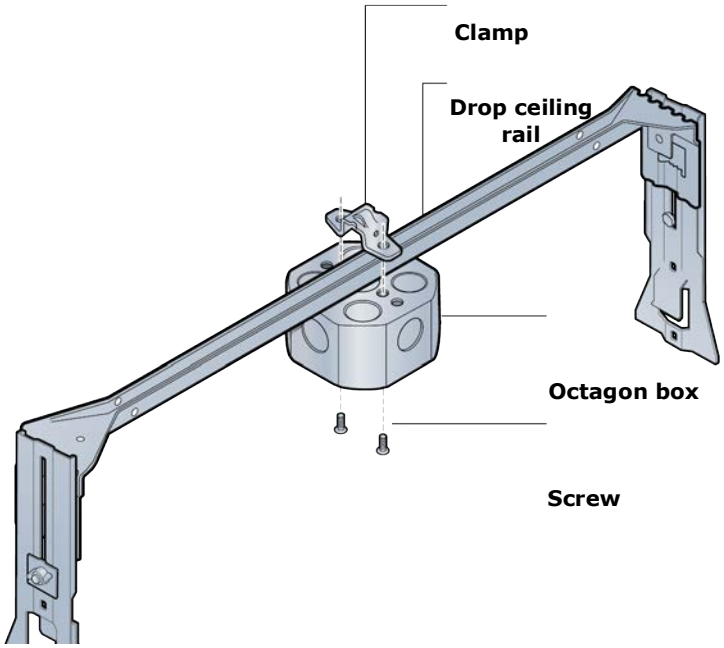

5 Replace the ceiling tile with the cutouts.

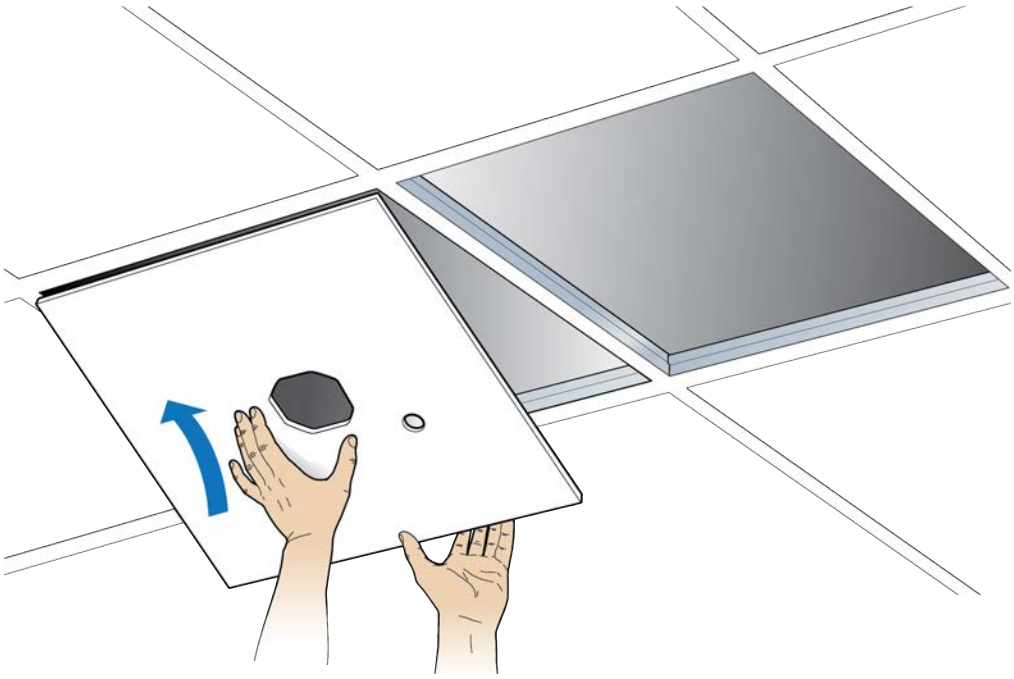

6 Install the drop rail assembly over the ceiling tile with the cutouts.

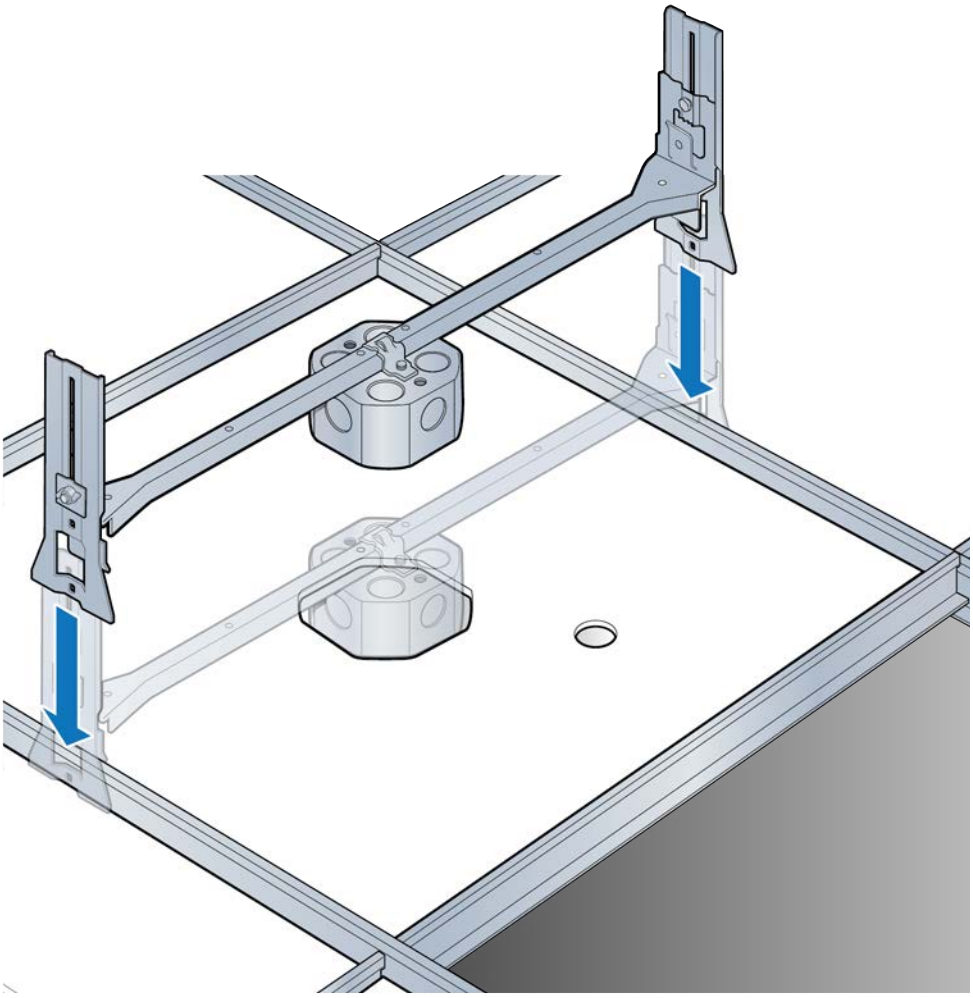

7 Attach the mounting plate onto the octagon box.

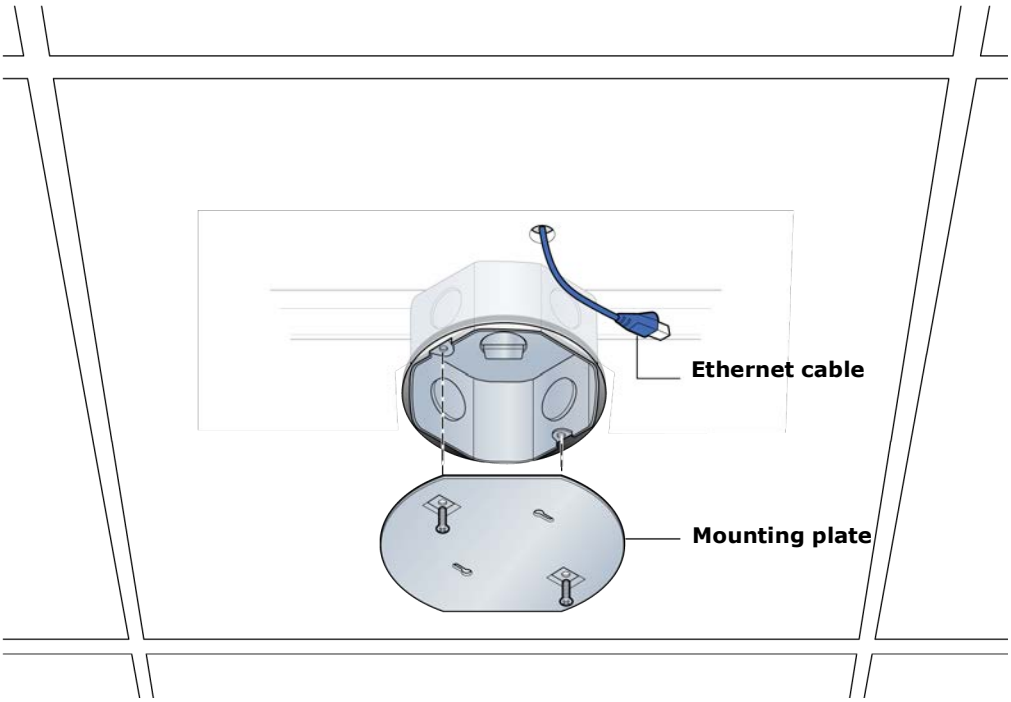

8 Attach base plate to the Radio Point.

NOTE: Apply thread locking compound to screws prior to installation.

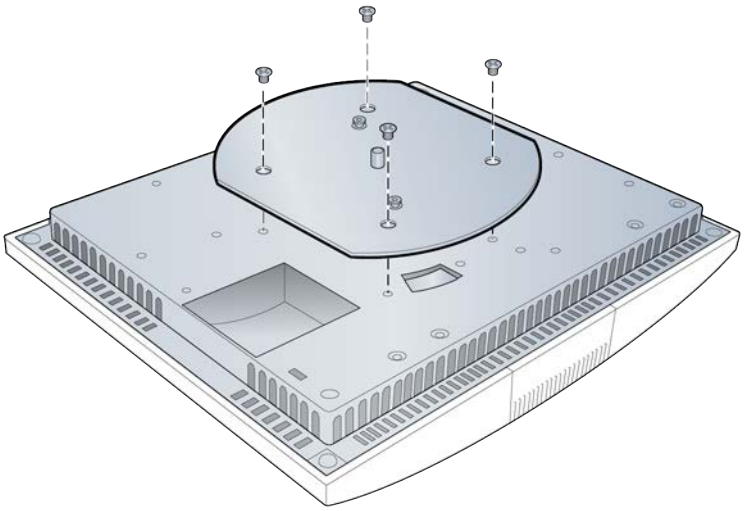

9 Mount the Radio Point to the octagon box plate.

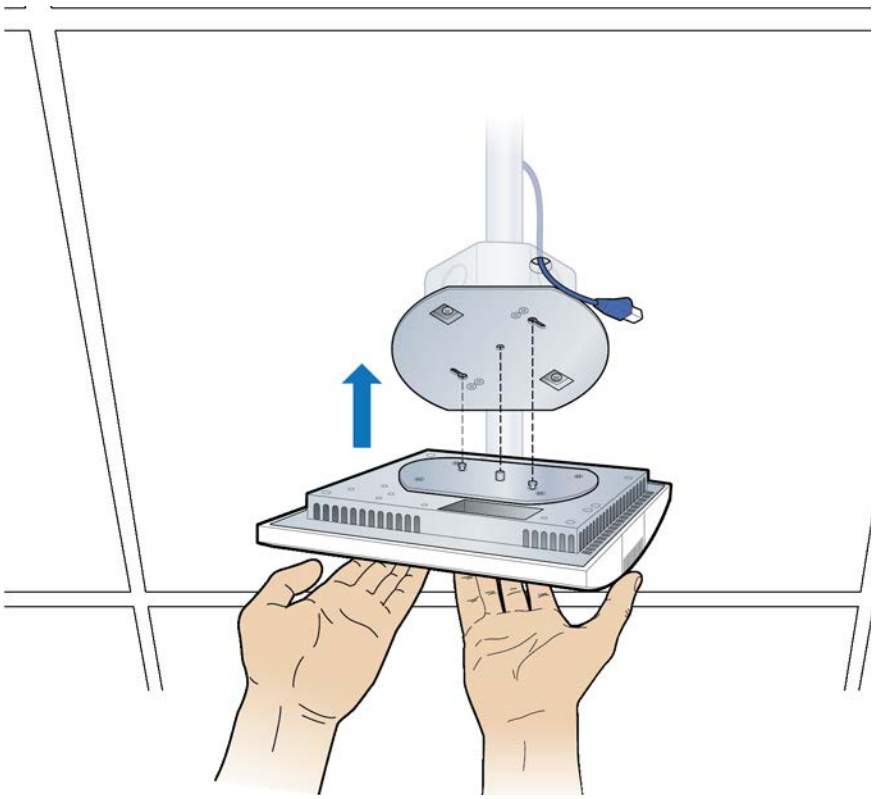

10 Secure the Radio Point.

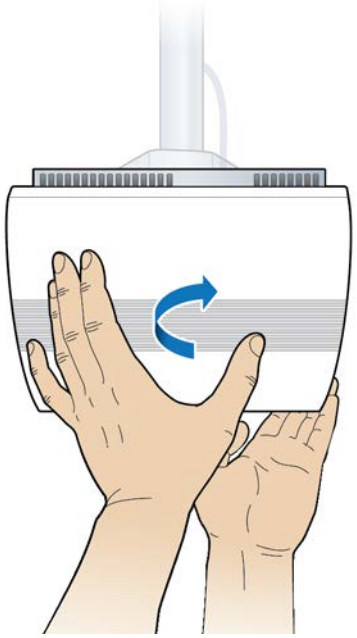

11 Connect the Ethernet cable to the Radio Point.

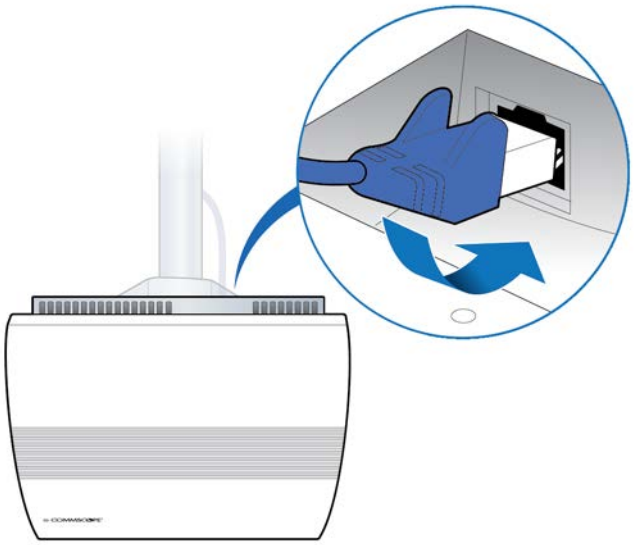

12 Replace the second ceiling tile.

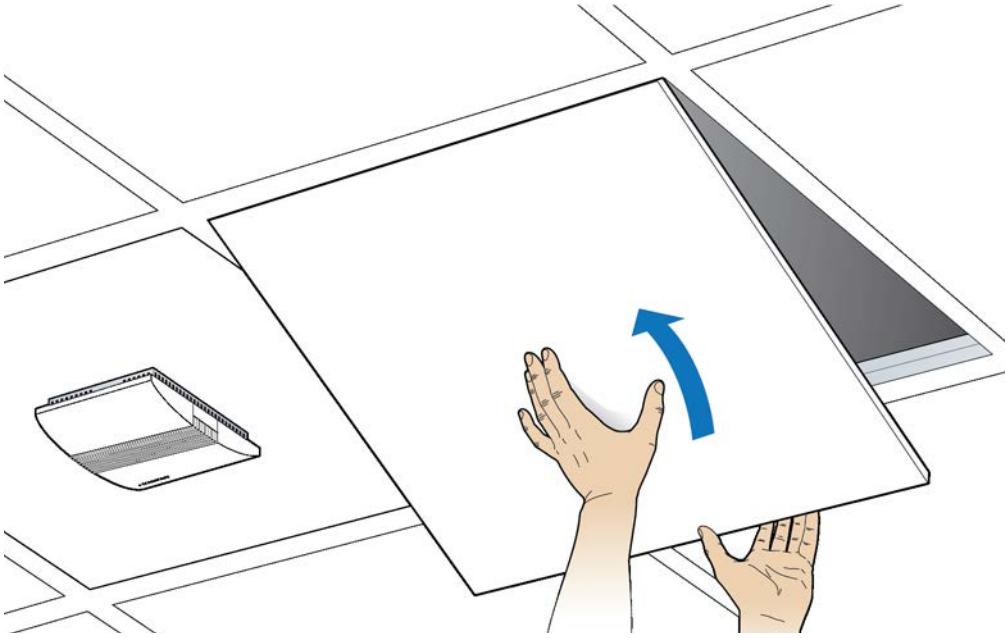

Installation is complete.

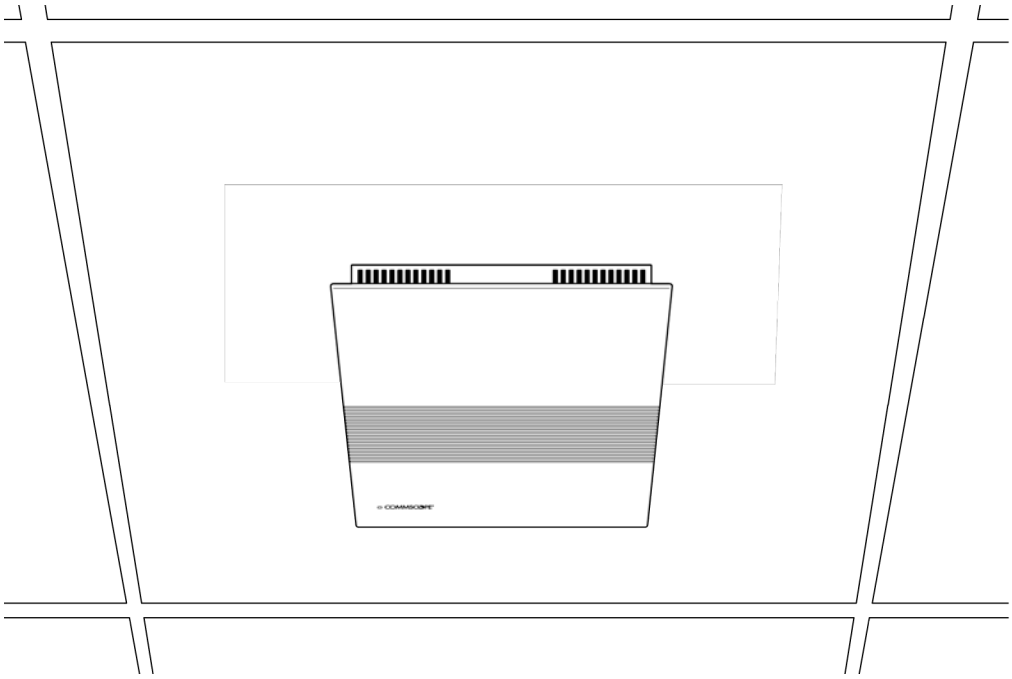

Mounting the Radio Point above the ceiling tile

1 Remove ceiling tile from the overhead.

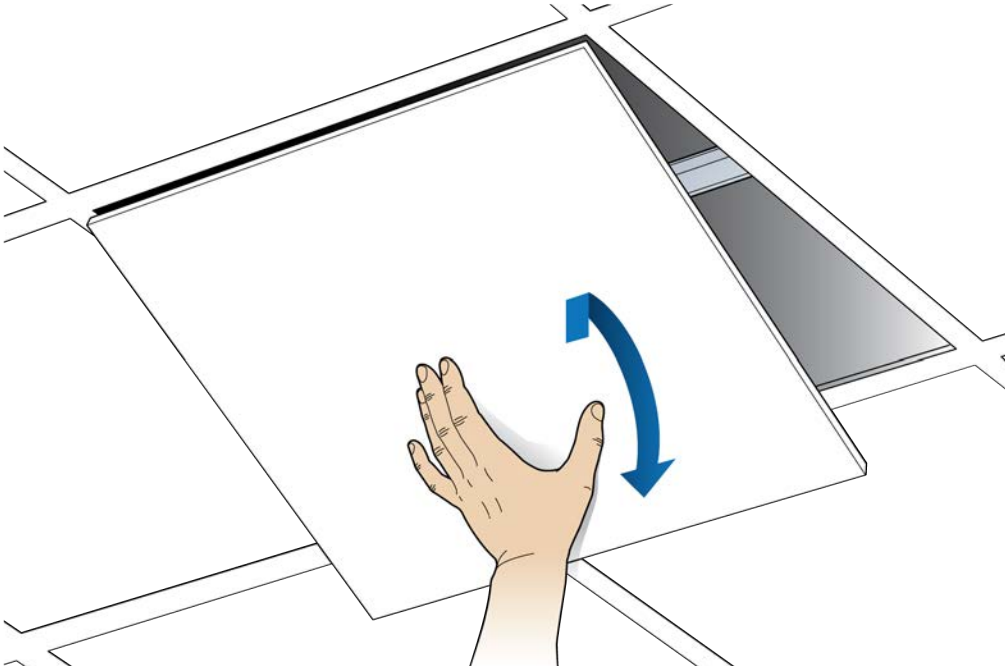

2 Attach the octagon box to the bracket.

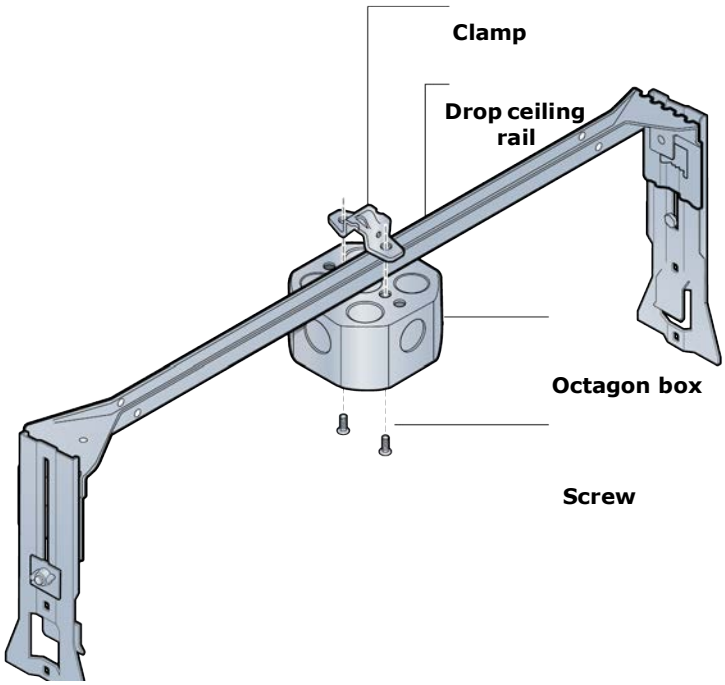

3 Attach the mounting plate to the Radio Point.

NOTE: Apply thread locking compound to screws prior to installation.

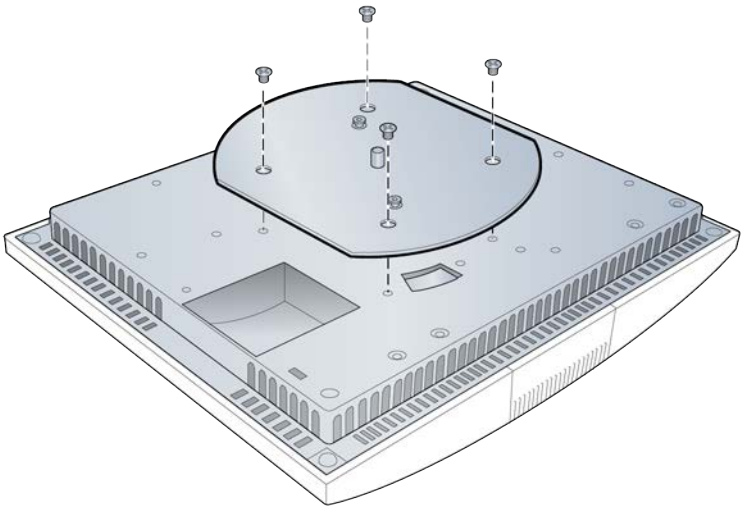

4 Attach the Radio Point to the octagon box.

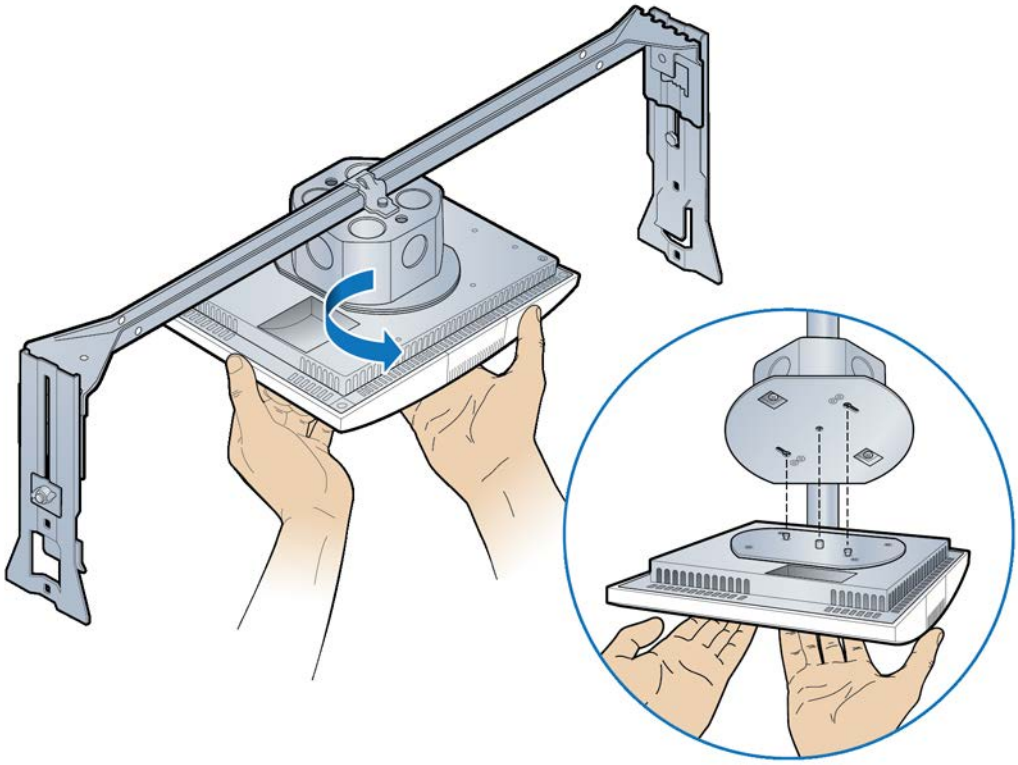

5 Install the drop rail assembly to the ceiling tile rail.

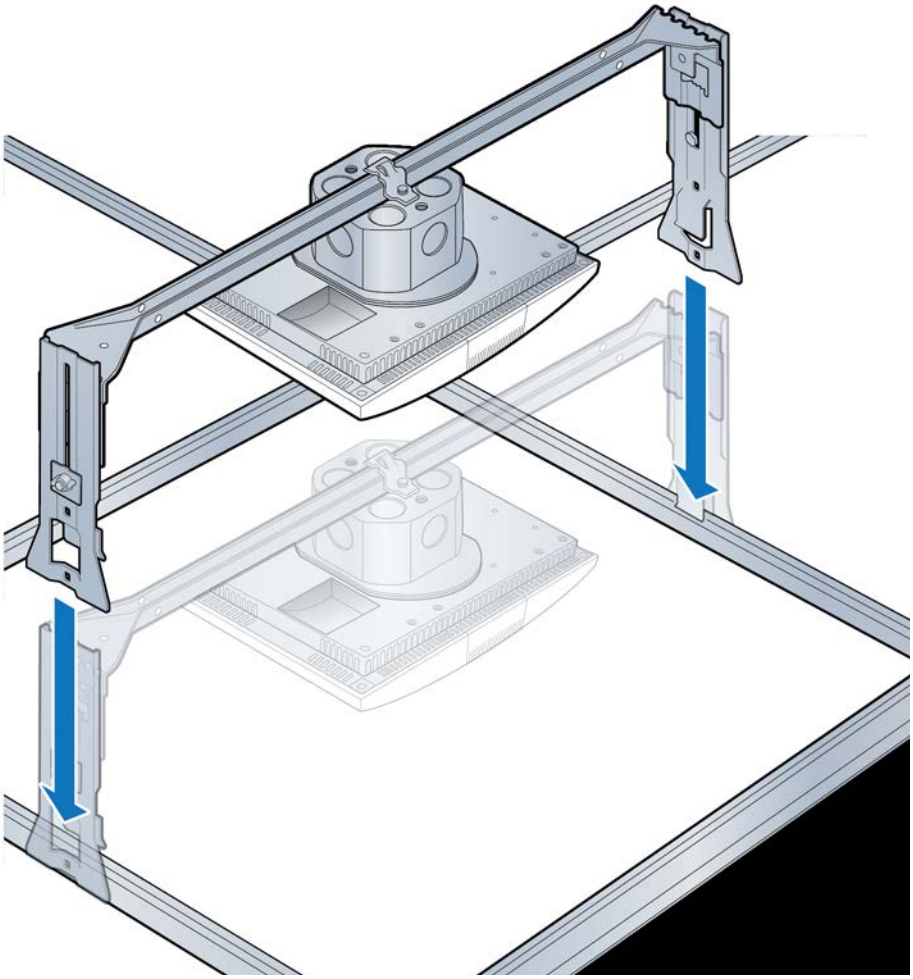

NOTE: The minimum clearance for cooling is 3 inches.

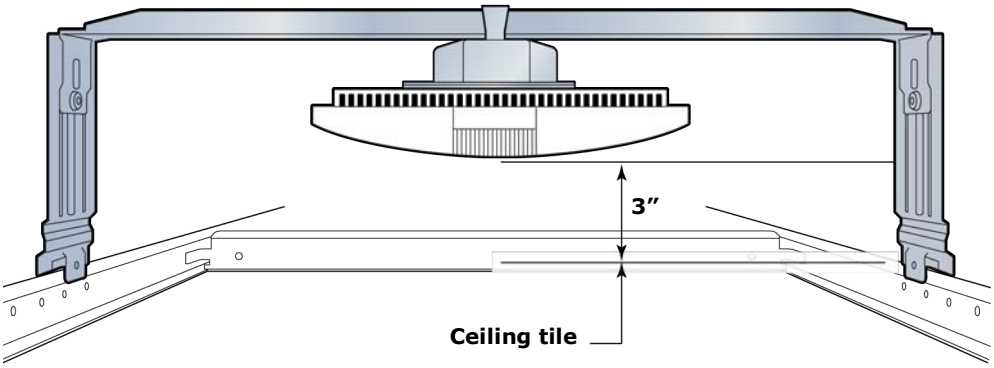

6 Connect Ethernet cable to RP.

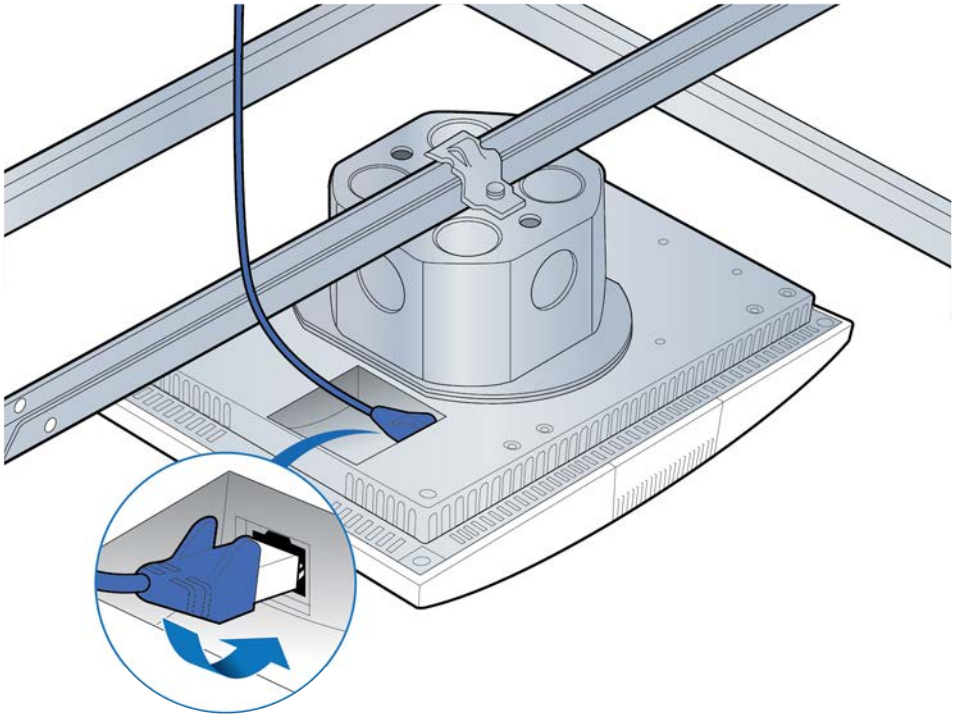

7 Replace the ceiling tile.

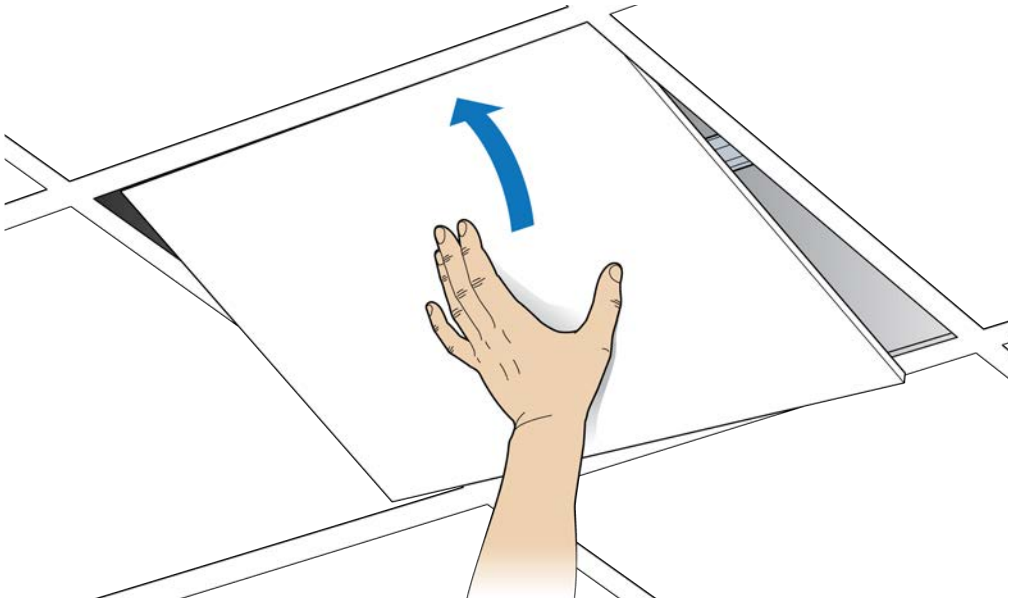

Flown mount

The Radio Point can be flown mounted on the end of a rod. This configuration is used for buildings where there are no drop ceilings.

Mounting the Radio Point (RP) in the flown configuration requires the hardware listed in Indoor Radio Point (RP2000) installation overview on page 7-2

Figure 7-3. CommScope supplied kit contents

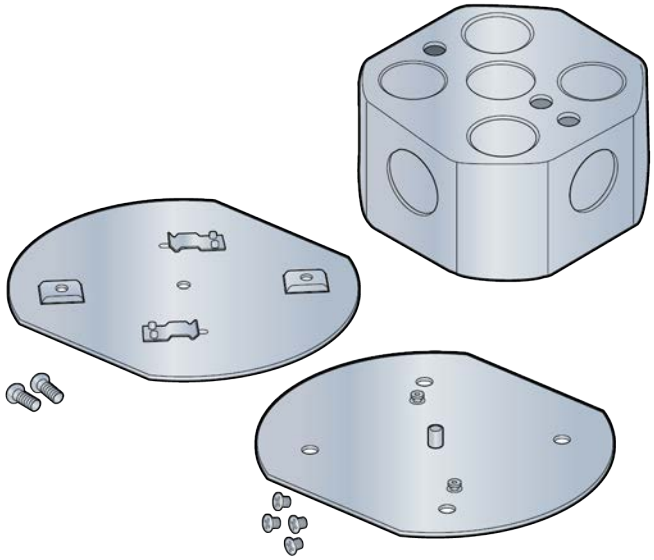

Mounting the Radio Point (RP) in the flown configuration requires the following hardware provided by the system integrator:

- Rod, 3/8-inch threaded
- 2 flat washers
- Nut
- Lock nut, nylon

Flown mount installation

1. Attach the threaded, 3/8-inch rod, cut to the required length, to the ceiling.
2. Install the nut and a flat washer on the rod.
3. Slide the octagon box onto the rod and install a flat washer and the nylon lock nut.

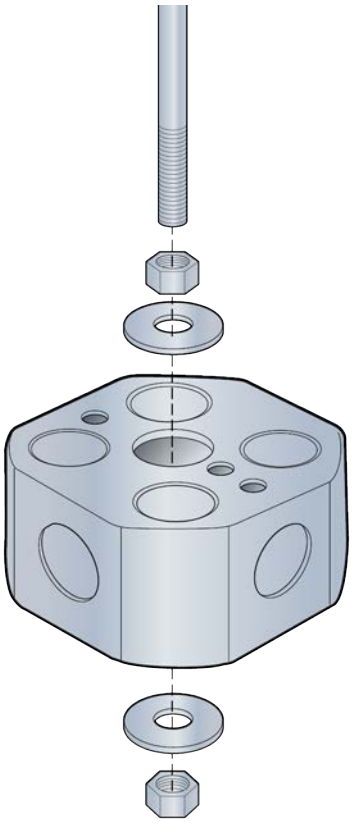

4 Attach the plate with two screws to the octagon box.

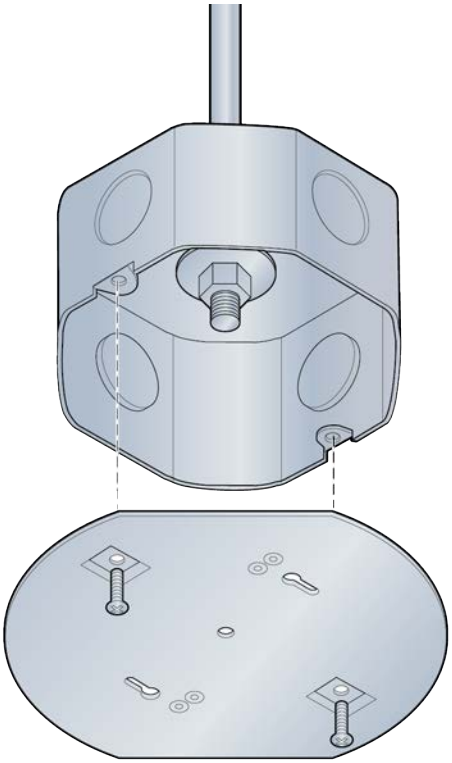

5 Attach the CommScope supplied mounting plate to the Radio Point with four screws.

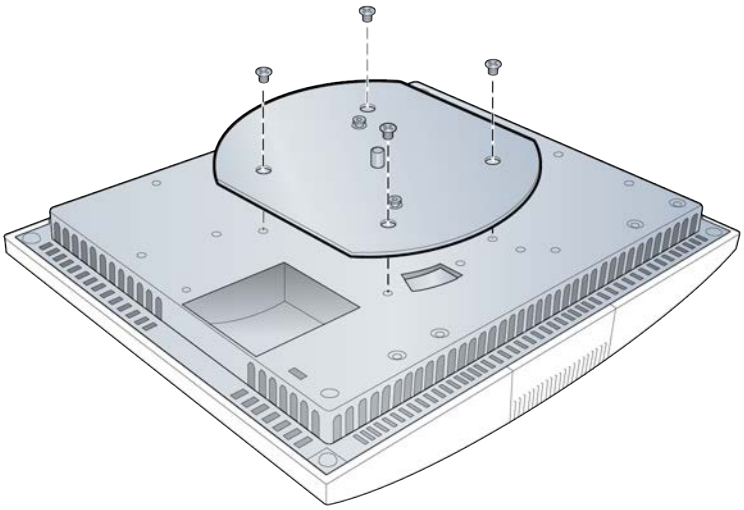

6 Attach the Radio Point to the octagon box.

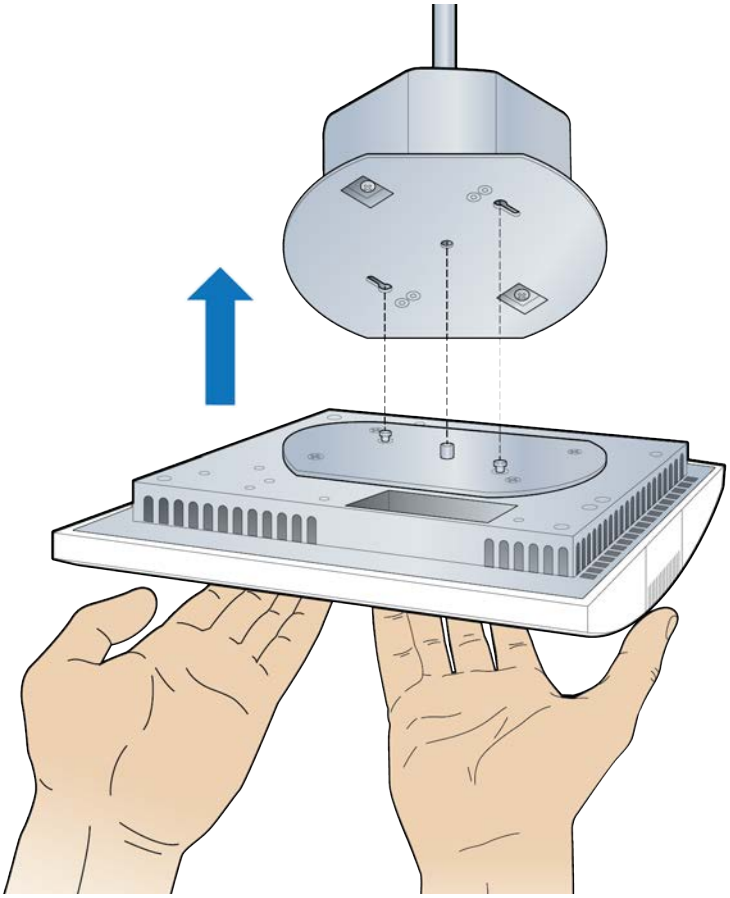

7 Secure the Radio Point to the octagon box plate.

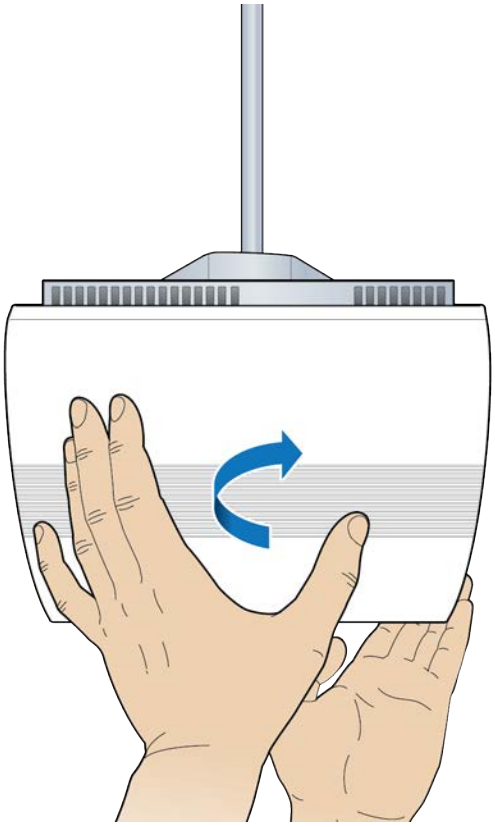

8 Connect the Ethernet cable to the Radio Point.

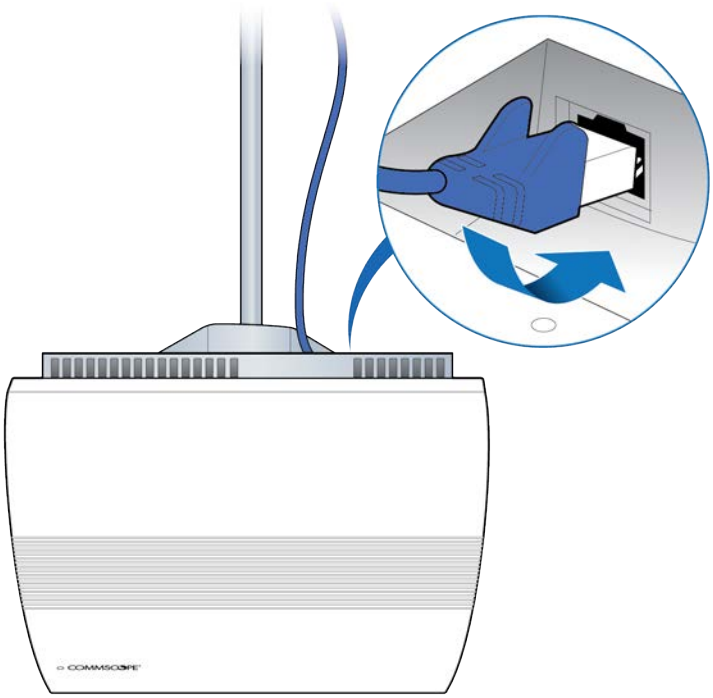

Installation is complete.

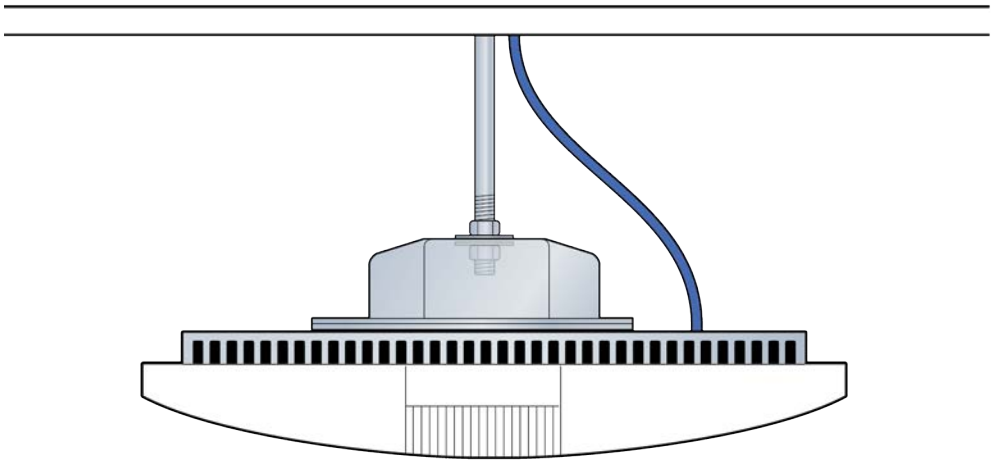

Pole mount

The Radio Point can be pole mounted. This configuration is used for building where there are no drop ceilings.

Mounting the Radio Point (RP) on a pole requires the following hardware provided by CommScope in the mounting kit:

- Mounting bracket
- 4 screws

Figure 7-4. Mounting bracket kit contents

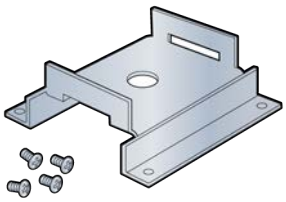

Mounting the Radio Point (RP) on a pole requires the following hardware provided by the system integrator:

- Adjustable clamp at least 2 inches larger than the circumference of the pole

Pole mount installation

1 Attach the bracket to the Radio point.

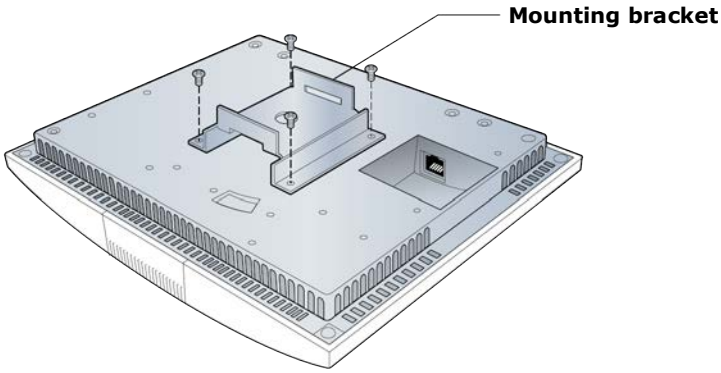

2. Slide the adjustable clamp through the slots on the Radio Point bracket.
3. Wrap the clamp around the pole and tighten the clamp screw to secure the Radio Point to the pole.

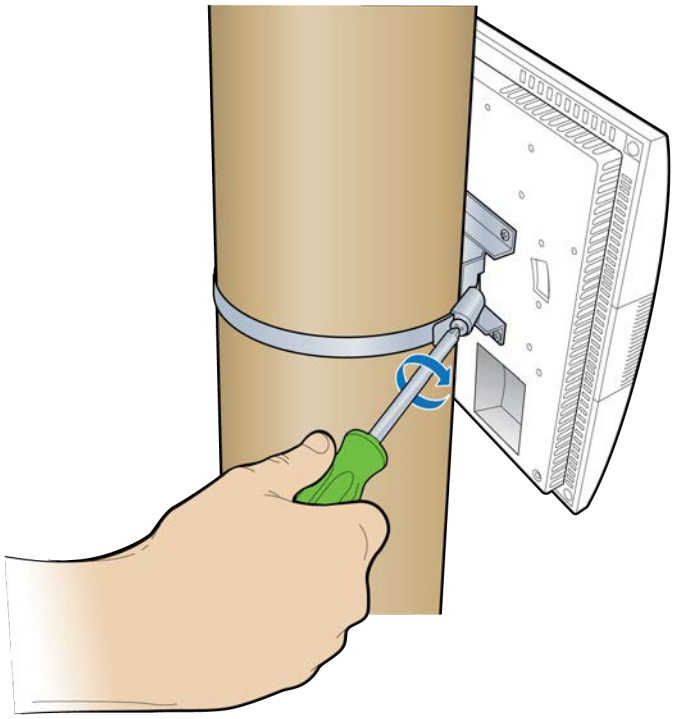

4. Connect the Ethernet cable to the Radio Point.

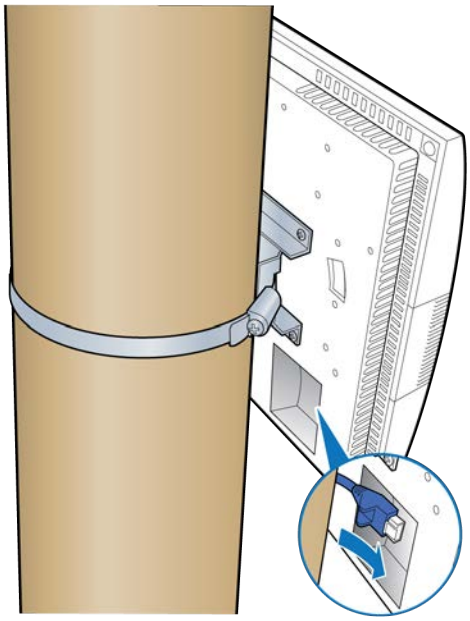
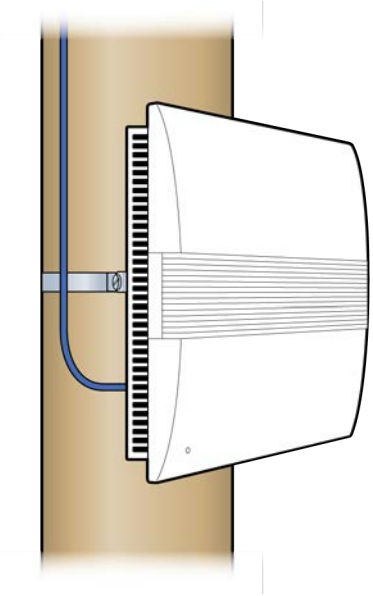
Installation is complete.