Chapter 8

RP2100 Installation

This chapter describes installing Rugged Radio Points on poles and walls.

Rugged Radio Point (RP2100) installation overview	8-2
Pole mount installation	8-4
Wall mount installation	8-17

Rugged Radio Point (RP2100) installation overview

The Rugged Radio Point (RP) ships with the following hardware:

- Radio Point
- Mounting plate
- Mounting brackets
- Four tamper-resistant mounting screws (M5)
- RJ45, IP67 connector
- Two 4.3-10 antenna couplers

NOTE

A tamper-resistant T25 Torx bit, 1/4" hex shank, attached to a driver handle, is required to secure the tamper-resistant mounting screws.

Tamper-Resistant T25 Torx Bit, 1/4" Hex Shank

Each

ADD TO ORDER

In stock
$2.13 Each
7377A47

For Drive Style	Tamper-Resistant Torx
Size	T25
Shank Type	Hex
Hex Shank Size	1/4"
Overall Length	1"
Material	Steel
End	Standard
Style	Bit
Individual/Set	Individual

Hex shank bits (also known as insert bits) are compact bits that are used in hand drivers or with a bit adapter in power tools.

Mounting the Radio Point (RP) on a pole requires the following hardware provided by the system integrator:

- Two adjustable clamps

Mounting the Radio Point (RP) on a wall requires the following hardware provided by the system integrator:

- Four molly screws capable – 50 lb (23 kg) minimum rating

Before installing the RP on the pole, terminate the RP end of the Ethernet cable with the RJ45, IP67 connector provided in the box.

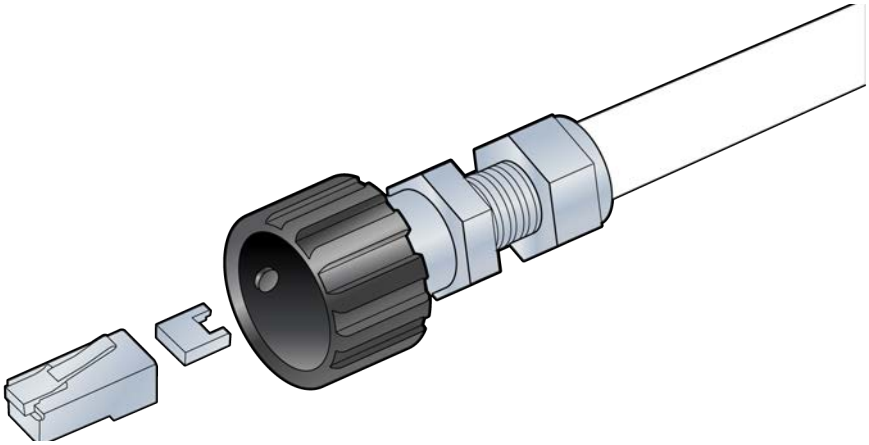

NOTE

Once the Radio Point is installed and the powered on, it may take up to 20 minutes for the frequency to stabilize and lock.

Pole mount installation

There are two orientations for pole mount installations:

- Vertical pole mount
- Horizontal pole mount

NOTE

The minimum pole diameter requirement is 4" (102mm).

Vertical pole mount

1. Attach mounting brackets to mounting plate.

   NOTE: The torque requirement for the bracket mounting screws is 5-6 in-lbs.

2. Slide the adjustable clamp through the slots on each RP mounting bracket on the RP plate.

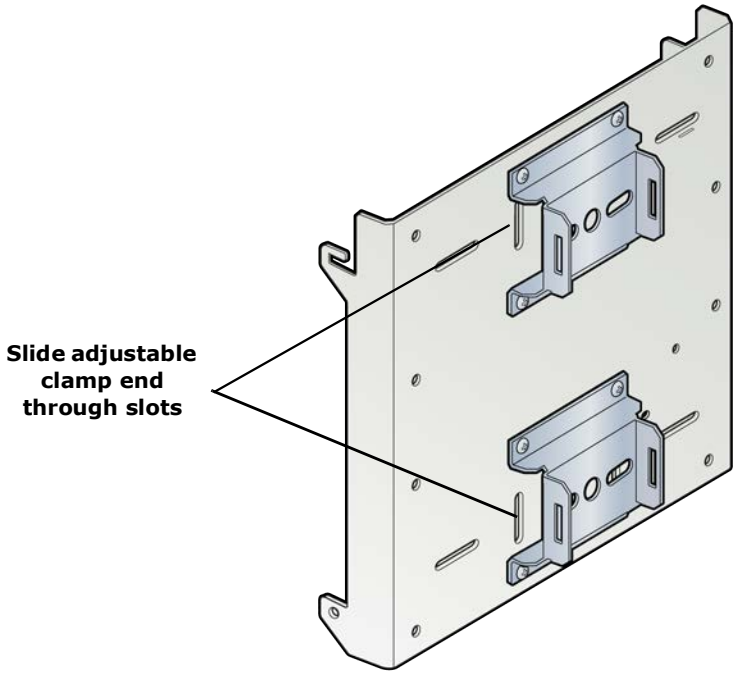

3 Wrap each clamp around the pole and tighten the clamp screw to secure the RP to the pole.

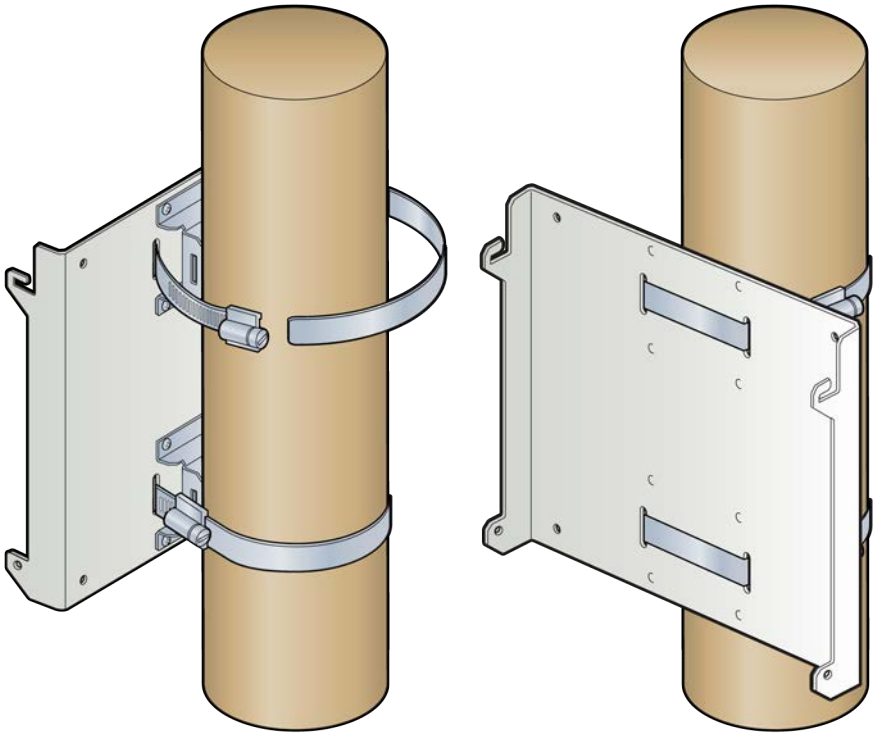

4 Insert two screws into the upper holes on opposite sides of the RP as shown in the drawing below.

CAUTION

Ensure that the RP is oriented correctly with the two antenna connectors at the top of the RP.

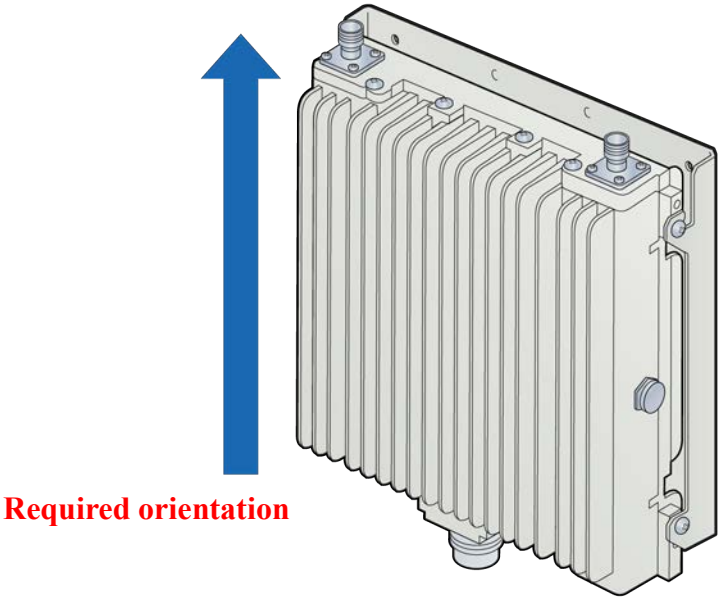

5 Hang the RP to the mounting bracket using the installed screws. Align holes at bottom location of bracket.

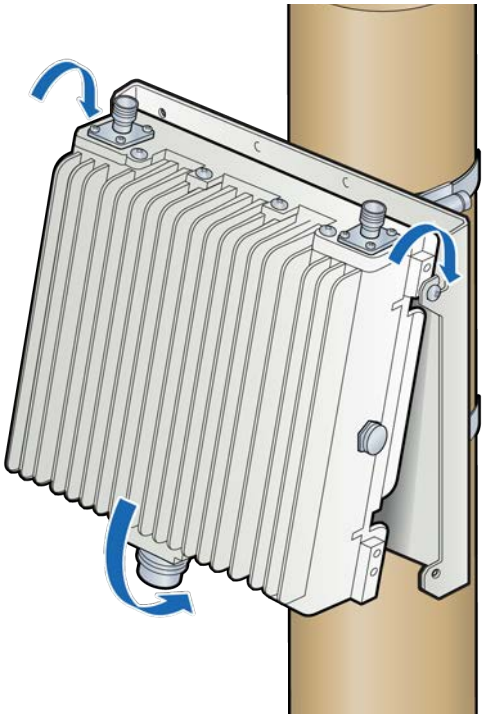

6 Insert and tighten the bottom screws through the plate hole into both sides of the RP. Be sure that all four screws are tightened.

NOTE: The torque requirement for the mounting screws is 20-21 in-lbs.

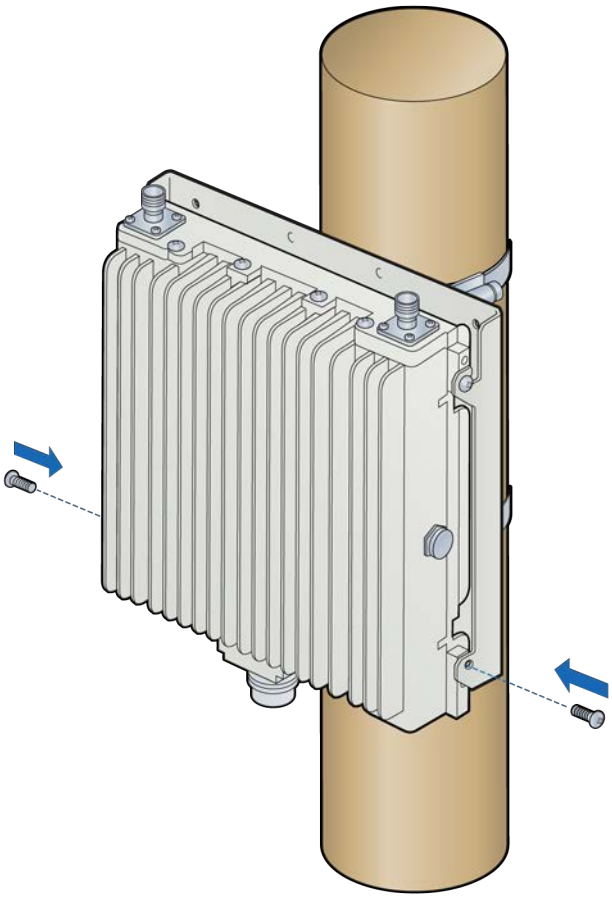

7 Connect the antenna couplers on the top of the RP.

NOTE: Check the antenna coupler manufacturer's documentation for torque requirements.

8 Connect the Ethernet cable RJ45 end to the bottom of the RP.

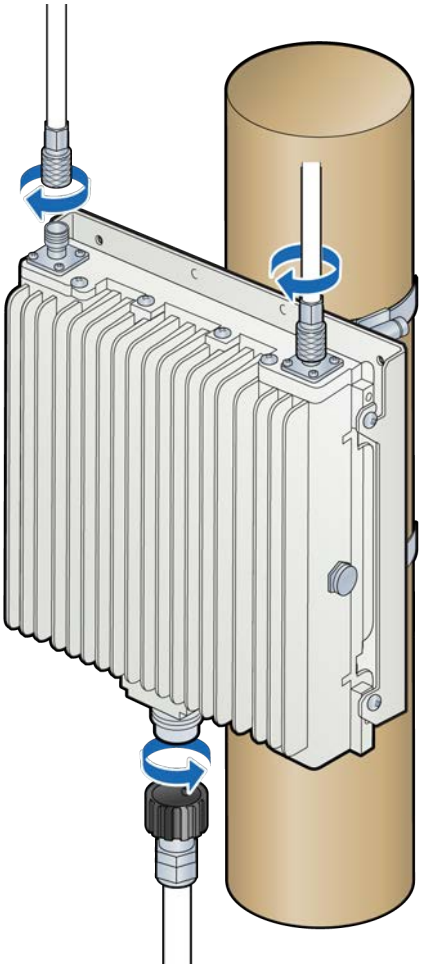

Horizontal pole mount

1 Attach mounting brackets to mounting plate.

NOTE: The torque requirement for the bracket mounting screws is 5-6 in-lbs.

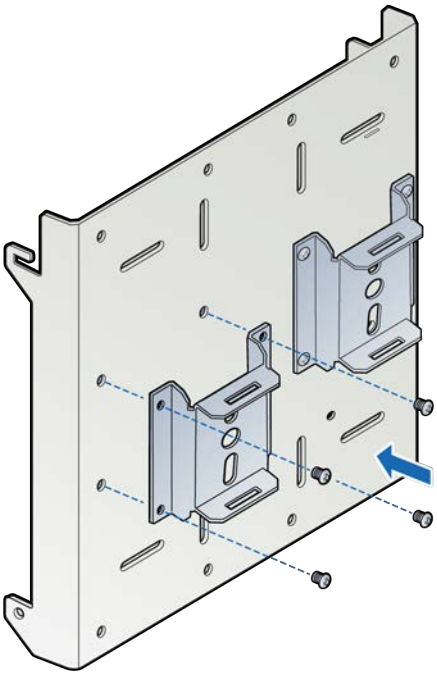

2 Slide the adjustable clamp through the slots on each RP mounting bracket on the RP plate.

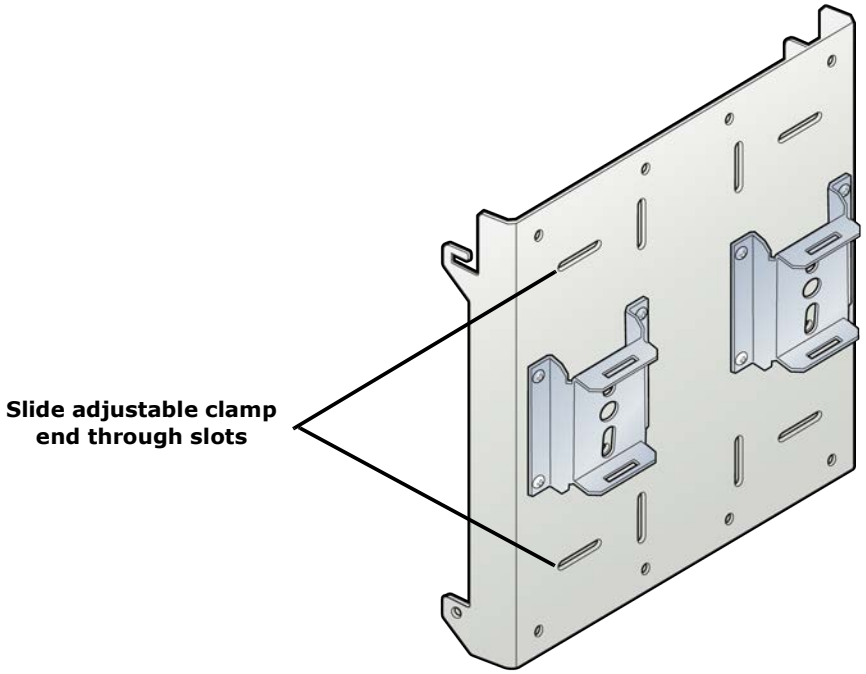

3 Wrap each clamp around the pole and tighten the clamp screw to secure the RP to the pole.

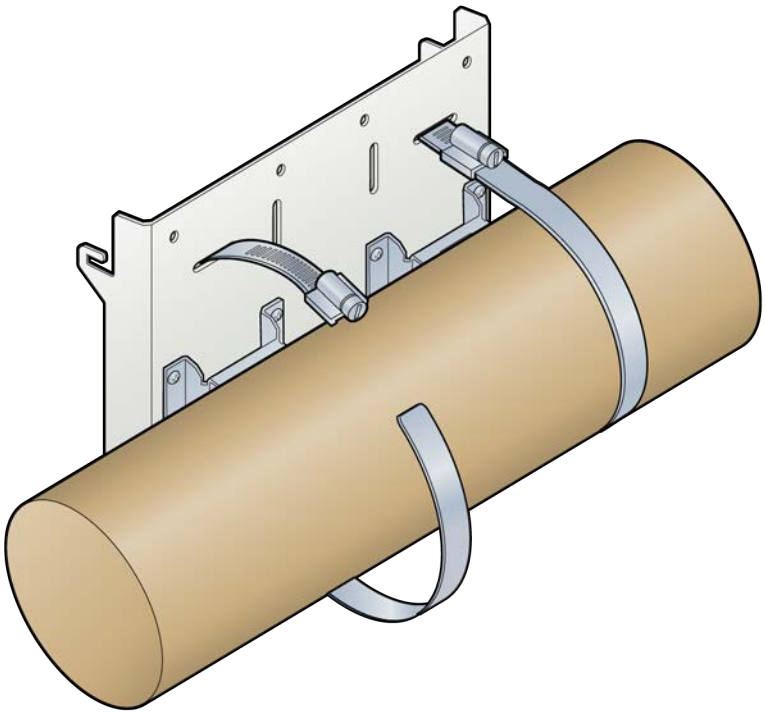

4 Insert two screws into the upper holes on opposite sides of the RP as shown in the drawing below.

CAUTION

Ensure that the RP is oriented correctly with the two antenna connectors at the top of the RP.

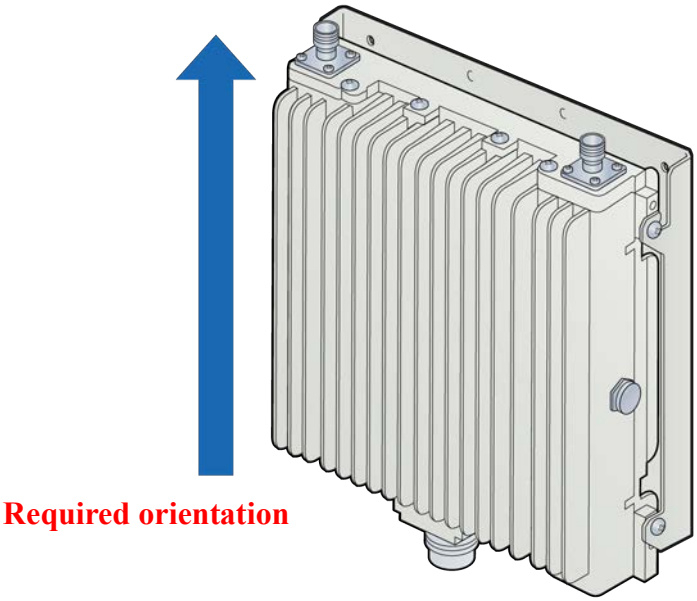

5 Hang the RP to the mounting bracket using the installed screws. Align holes at bottom location of bracket and install two additional screws.

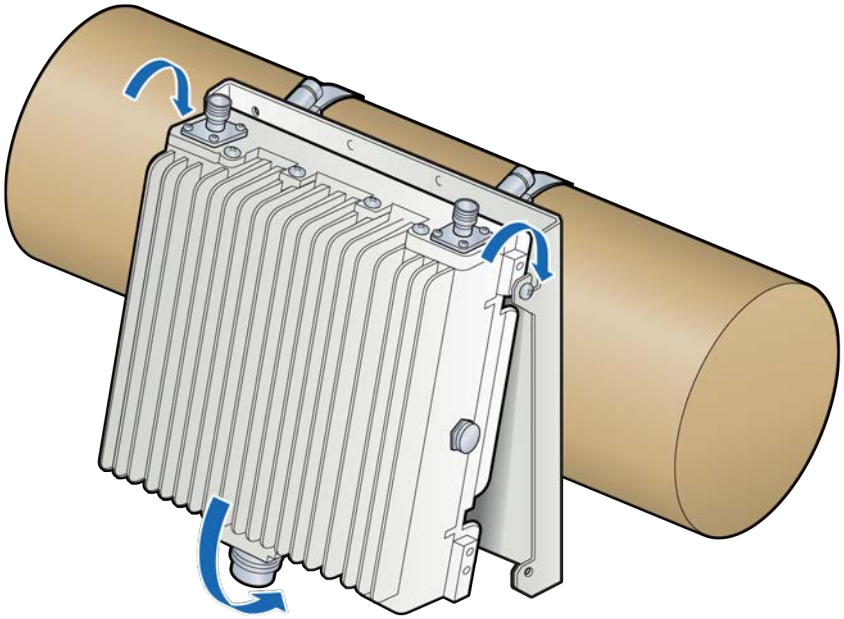

6 Insert and tighten the bottom screws through the plate hole into both sides of the RP. Be sure that all four screws are tightened.

NOTE: The torque requirement for the mounting screws is 20-21 in-lbs.

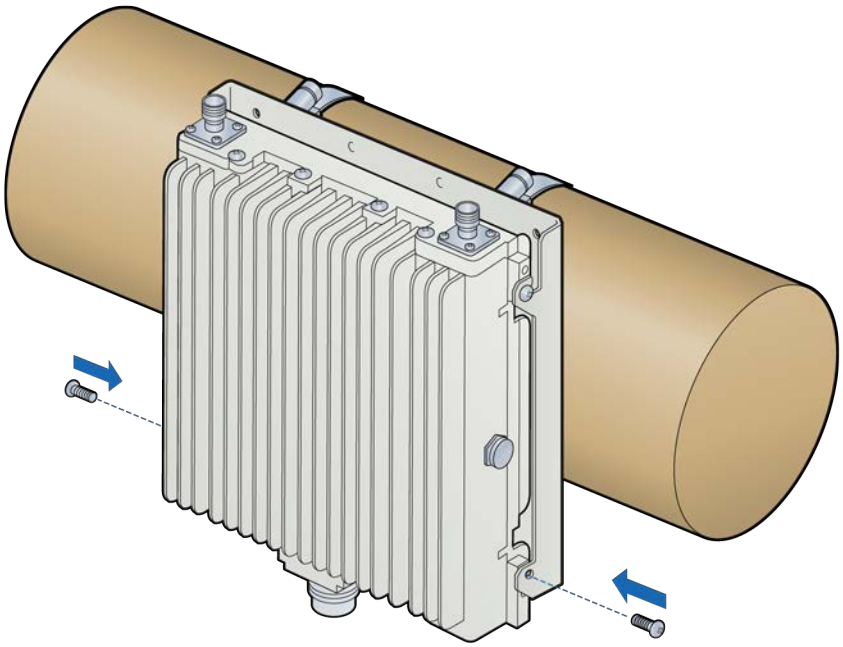

7 Connect the antenna couplers on the top of the RP.

NOTE: Check the antenna coupler manufacturer's documentation for torque requirements.

8 Connect the Ethernet cable RJ45 end to the bottom of the RP.

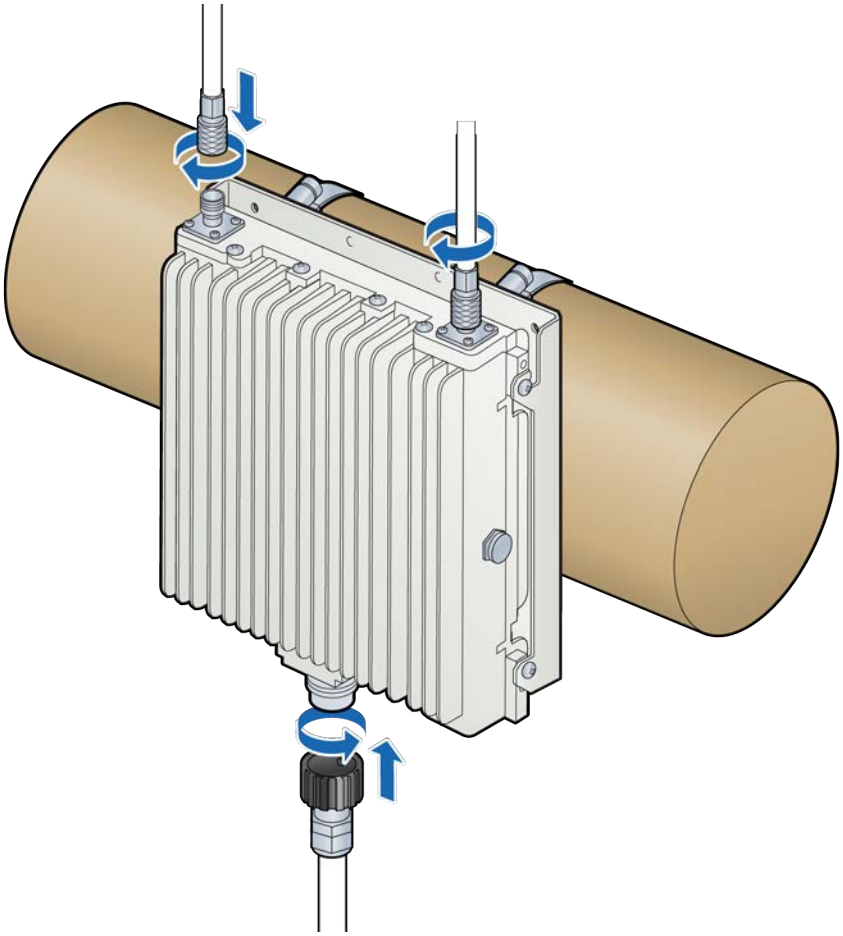

Wall mount installation

1 Drill four holes in the wall using the mounting plate to determine the hole locations. Mount the backplate on the wall with four molly screws.

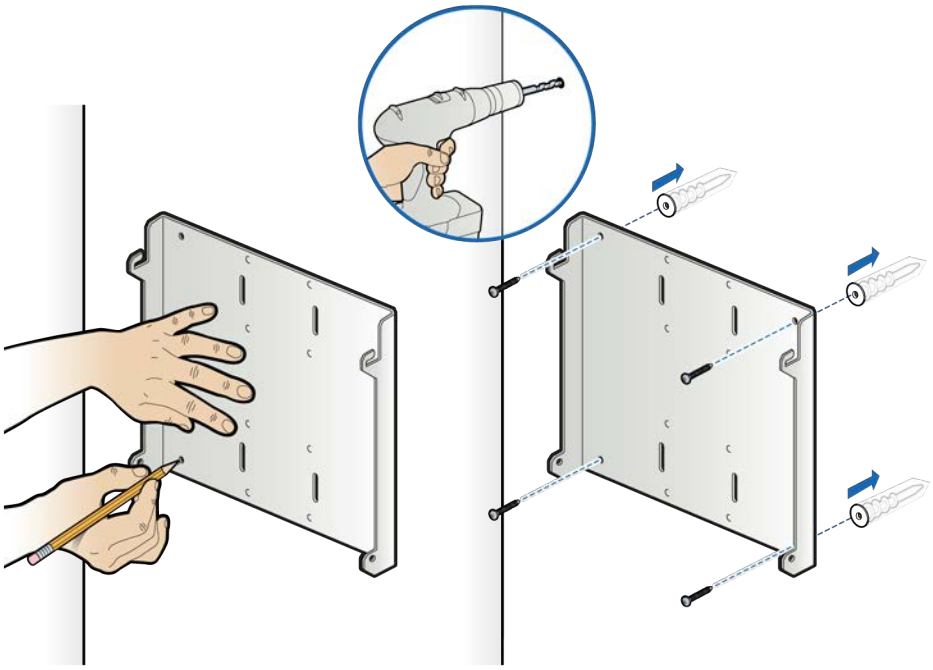

2 Insert two screws into the upper holes on opposite sides of the RP as shown in the drawing below.

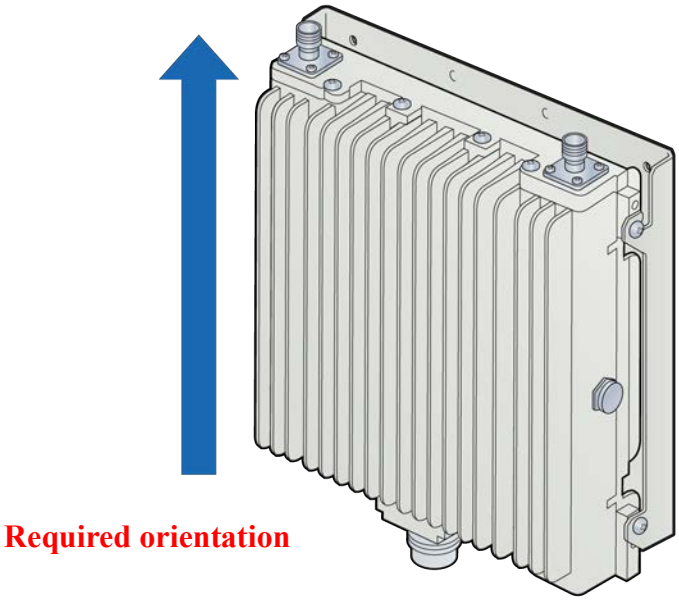

3 Attach the RP to the mounting plate. Tighten the top screws on the RP and insert and tighten the bottom screws on the RP.

NOTE: The torque requirement for the mounting screws is 20-21 in-lbs.

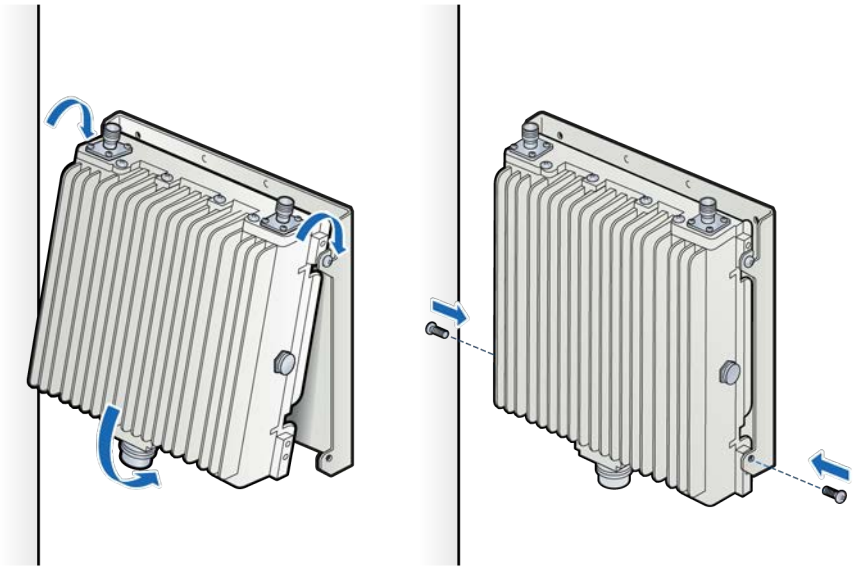

4. Insert and tighten the bottom screws through the plate hole into both sides of the RP.
5. Connect the antenna couplers on the top of the RP.

   NOTE: Check the antenna coupler manufacturer's documentation for torque requirements.

6. Connect the Ethernet cable RJ45 end to the bottom of the RP.

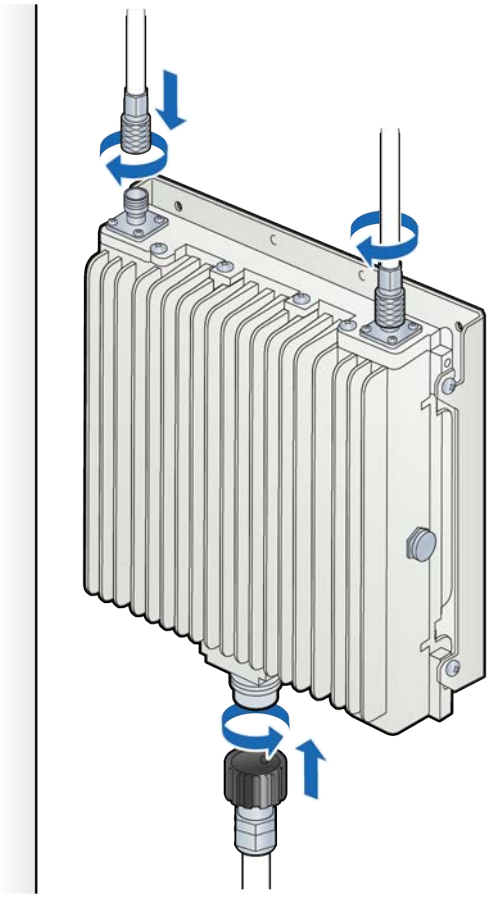

Part III: Appendices

Appendix A **Safety**

Appendix B **Installation troubleshooting**

Appendix C **Specifications**

Appendix D **Field Replaceable Units**

Appendix E **Cable installation and power separation guidelines**

Appendix A

Safety

This appendix contains specifications for CommScope ONECELL, including FCC information and technical data.

Radiation Exposure Statement	A-2
Human exposure limits for ONECELL deployments	A-2
FCC ID	A-8

Radiation Exposure Statement

Important: Changes or modifications not expressly approved by CommScope LLC could void your authority to operate the equipment.

FCC Part 15

The Baseband Controller, RP5100 and RP5200 have been tested and found to comply with the limits for Class A equipment, pursuant to Part 15 of the FCC Rules.

NOTE

This equipment has been tested and found to comply with the limits for a Class A digital device, pursuant to part 15 of the FCC Rules. These limits are designed to provide reasonable protection against harmful interference when the equipment is operated in a commercial environment. This equipment generates, uses, and can radiate radio frequency energy and, if not installed and used in accordance with the instruction manual, may cause harmful interference to radio communications. Operation of this equipment in a residential area is likely to cause harmful interference in which case the user will be required to correct the interference at his own expense.

For more information, see the publication femtocells and Health at http:// www.femtoforum.org or visit the FCC website at www.fcc.gov.

EN55032

WARNING

This equipment is compliant with Class A of EN55032. In a residential environment, this equipment may cause radio interference.

Human exposure limits for ONECELL deployments

The human exposure limits for the ONECELL product is calculated by using the Maximum Permissible Exposure (MPE) method associated with fixed-type transmitter devices at a minimum exposure distance of 20 cm.

WARNING

This equipment is not suitable for use in locations where children are likely to be present.

Table A-1 includes values for one Radio Point (RP5100 series) and four Radio Points per chassis.

Table A-1. RF exposure for ONECELL at maximum power internal antennas for RP5100 series

Parameter	RPM-A5A11-B13	RPM-A5A11-B66	RPM-A5A11-B02	RPM-I5A11-B01	RPM-I5A11-B03	RPM-I5A11-B07
Tx Power (dBm) per antenna	21.48	24.13	24.23	24.25	24.00	24.70
Tx Loss (dB)	0	0	0	0	0	0
Tx Antenna Gain (dBi)	4	4	4	4	4	4
Transmitter Duty Cycle %	100	100	100	100	100	100
Number of Antennas (MIMO)	2	2	2	2	2	2
Contribution due to multiple antennas (dB)	3.0103	3.0103	3.0103	3.0103	3.0103	3.0103
Derived Total EIRP (dBW)	-1.510	1.140	1.240	1.260	1.010	1.710
Bands	13	66	2	1	3	7
Frequency Range (MHz)	746-756	2110-2200	1930-1990	2110-2170	1805-1880	2620-2690
Point Source Total EIRP (watts)	0.706	1.300	1.331	1.337	1.262	1.483
Power Density (W/m2) @ 20 cm	1.405	2.587	2.647	2.569	2.510	2.950

1. For persons with implants, the maximum calculated distance of 30cm. This applies to any combination of up to four radio modules in Bands 1,3 and 7.
2. For general public and workers, a measured distance of 5mm was determined. This applies to any combination of up to four radio modules in Bands 1,3 and 7.
3. For general public and workers, a calculated distance of 20cm was determined. This applies to any combination of up to four radio modules in Bands 2 and 66.

Parameter	RPM-I5A11-B17	RPM-A5A11-B12	RPM-A5A11-B14	RPM-A5A11-B05	RPM-A5A11-B30
Tx Power (dBm) per antenna	21.70	21.88	21.45	21.58	20.99
Tx Loss (dB)	0	0	0	0	0
Tx Antenna Gain (dBi)	4	4	4	2	5
Transmitter Duty Cycle %	100	100	100	100	100
Number of Antennas (MIMO)	2	2	2	2	2
Contribution due to multiple antennas (dB)	3.0103	3.0103	3.0103	3.0103	3.0103
Derived Total EIRP (dBW)	-1.290	-1.110	-1.540	-3.410	-1.000
Bands	12	12	14	5	30
Frequency Range (MHz)	734-746	729-746	758-768	869-894	2350-2360
Point Source Total EIRP (watts)	0.743	0.775	0.702	0.456	0.794
Power Density (W/m2) @ 20 cm	1.478	1.541	1.396	0.907	1.58

Table A-2 includes values for one Radio Point (RP5200) and four Radio Points per chassis.

Table A-2. RF exposure for ONECELL at maximum power internal antennas for RP5200 series

Parameter	RPM-A5A11-B66	RPM-A5A11-B02	RPM-I5A11-B01	RPM-I5A11-B03	RPM-I5A11-B07
Tx Power (dBm) per antenna	24.13	24.23	24.25	24.00	24.70
Tx Loss (dB)	0	0	0	0	0
Tx Antenna Gain (dBi)	4	4	4	4	4
Transmitter Duty Cycle %	100	100	100	100	100
Number of Antennas (MIMO)	2	2	2	2	2
Contribution due to multiple antennas (dB)	3.0103	3.0103	3.0103	3.0103	3.0103
Derived Total EIRP (dBW)	1.140	1.240	1.260	1.010	1.710

Table A-2. RF exposure for ONECELL at maximum power internal antennas for RP5200 series *(continued)*

Parameter	RPM-A5A11-B66	RPM-A5A11-B02	RPM-I5A11-B01	RPM-I5A11-B03	RPM-I5A11-B07
Bands	66	2	1	3	7
Frequency Range (MHz)	2110-2200	1930-1990	2110-2170	1805-1880	2620-2690
Point Source Total EIRP (watts)	1.300	1.331	1.337	1.262	1.483
Power Density (W/m2) @ 20 cm	2.587	2.647	2.569	2.510	2.950

1. For persons with implants, the maximum calculated distance of 30cm. This applies to any combination of up to four radio modules in Bands 1,3 and 7.
2. For general public and workers, a measured distance of 5mm was determined. This applies to any combination of up to four radio modules in Bands 1,3 and 7.

For general public and workers, a calculated distance of 20cm was determined. This applies to any combination of up to four radio modules in Bands 2 and 66.

Parameter	RPM-I5A11-B17	RPM-A5A11-B12	RPM-A5A11-B14	RPM-A5A11-B05	RPM-A5A11-B30
Tx Power (dBm) per antenna	21.70	21.88	21.45	21.58	20.99
Tx Loss (dB)	0	0	0	0	0
Tx Antenna Gain (dBi)	4	4	4	2	5
Transmitter Duty Cycle %	100	100	100	100	100
Number of Antennas (MIMO)	2	2	2	2	2
Contribution due to multiple antennas (dB)	3.0103	3.0103	3.0103	3.0103	3.0103
Derived Total EIRP (dBW)	-1.290	-1.110	-1.540	-3.410	-1.000
Bands	17	12	14	5	30
Frequency Range (MHz)	734-746	729 - 746	758 - 768	869-894	2350-2360
Point Source Total EIRP (watts)	0.743	0.775	0.702	0.456	0.794
Power Density (W/m2) @ 20 cm	1.478	1.541	1.396	0.907	1.58

Parameter	RPM-I5A11-B13	RPM-I5A11-B25	RPM-A5A11-N77C*
Tx Power (dBm) per antenna	21.75	23.30	29.50
Tx Loss (dB)	0	0	0
Tx Antenna Gain (dBi)	4	4	4
Transmitter Duty Cycle %	100	100	Variable
Number of Antennas (MIMO)	2	2	4
Contribution due to multiple antennas (dB)	3.0103	3.0103	0.0000
Derived Total EIRP (dBW)	-1.240	0.310	3.500
Bands	13	25	n77
Frequency Range (MHz)	746-756	1930-1990 1930-1995	3700-3980
Point Source Total EIRP (watts)	0.752	1.074	2.239
Power Density (W/m2) @ 20 cm	1.495	2.137	4.454
* N77C Tx power is sum of all 4 antenna port measurements			

Table A-3 includes values for one Radio Point (RP2000 and RP2100) and four Radio Points per chassis.

Table A-3. RF exposure for ONECELL at maximum power internal antennas for RP2000 series

Parameter	Indoor RP-A2014 & RP-I2014		Rugged RP-A2114 & RP-I2114			
Tx Power (dBm) per antenna	21	21	21	21	21	21
Tx Loss (dB)	0	0	0	0	0	0
Tx Antenna Gain (dBi)	0	5	11.8	12	12.5	13.5
Transmitter Duty Cycle %	100	100	100	100	100	100
Number of Antennas (MIMO)	2	2	2	2	2	2
Contribution due to multiple antennas (dB)	3.0103	3.0103	3.0103	3.0103	3.0103	3.0103
Derived Total EIRP (dBW)	-5.990	-0.990	5.810	6.010	6.510	7.510

Table A-3. RF exposure for ONECELL at maximum power internal antennas for RP2000 series *(continued)*

Parameter	Indoor RP-A2014 & RP-I2014		Rugged RP-A2114 & RP-I2114			
Bands	12,13,17	1,2,3,4,7,10,25	12,13,17	3	1,2,4,10,25	2620-2690
Frequency Range (MHz)	729-756	1805-2690	729-756	1805-1880	1930-2170	2620-2690
Point Source Total EIRP (watts)	0.252	0.796	3.811	3.991	4.477	5.637
Power Density (W/m2) @ 20 cm	0.501	1.584	7.582	7.939	8.908	11.214

Reference documents

[1] Federal Communications Commission Document OET Bulletin 65, Supplement C, 2001, Evaluating Compliance with FCC guidelines for Human Exposure to radio frequency Electromagnetic Fields, US Federal Communications Commission, Office of Engineering and Technology June 2001.

[2] Federal Communications Commission Document OET Bulletin 56, “Questions and answers about biological effects and potential hazards of radio frequency electromagnetic fields”, Federal Communications Commission Office of Engineering and Technology, August 1999.

[3] ICNIRP Guidelines for limiting exposure to time varying electric, magnetic and electromagnetic fields up to 300 GHz. International Commission on Non Ionizing Radiation, published in Health Physics 74 (4): 494-522; 1998

[4] ICNIRP Statement on EMF-Emitting New Technologies, International Commission on Non-Ionizing Radiation, published in Health Physics 94 (4):376-392, 2008

[5] 3GPP Document 3GPP TS 36.104 version 10.11.0 Release 10,” LTE Evolved Universal Terrestrial Radio Access (E-UTRA); Base Station (BS) radio transmission and reception”

FCC ID

The FCC ID is available on the information labels attached to the RPs.

RP5100i and RP5200i series

For the RP5100i and RP5200i , the FCC ID for each of the installed radio modules is visible when the cover or the Radio Module is removed from the RP. The drawing below shows the label on the radio module.

Figure A-1. RP5200i C-Band Radio Module label

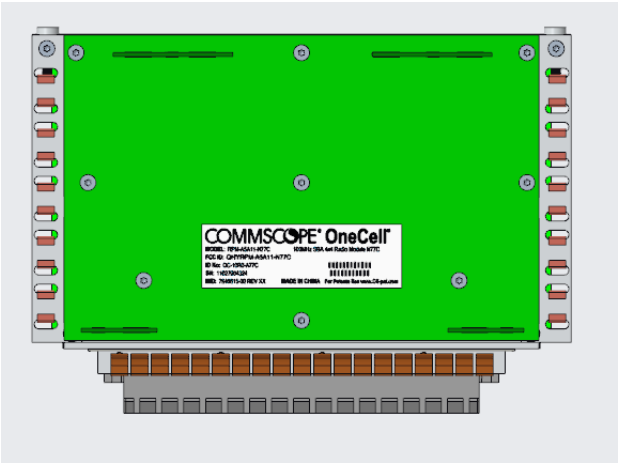

Figure A-2. RP5100i and RP5200i LTE Radio Module label

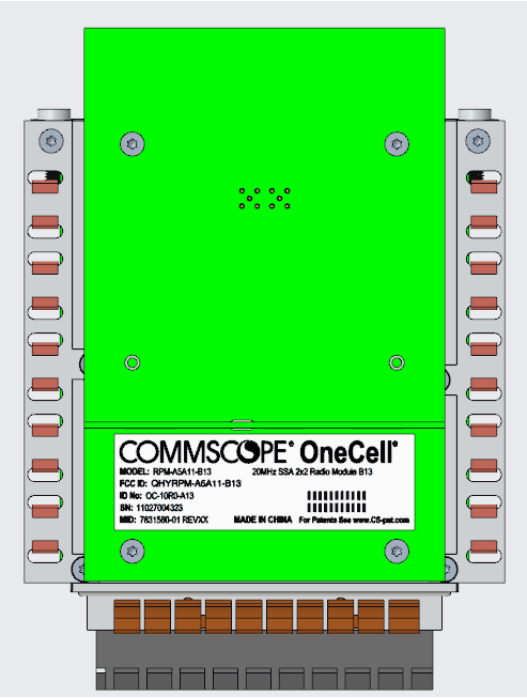

The RP5100r FCC ID is on the label located on the side of device as shown in the drawing below.

Figure A-3. RP5100r FCC ID label

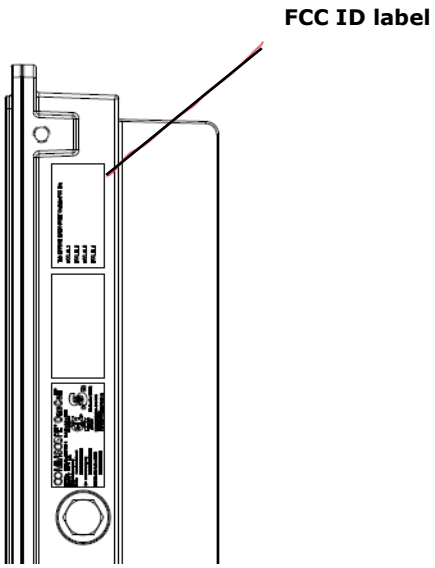

RP2000 series

The RP2000 FCC ID is on the label located on the back of the device as shown in the drawing below.

Figure A-4. RP2000 FCC ID label

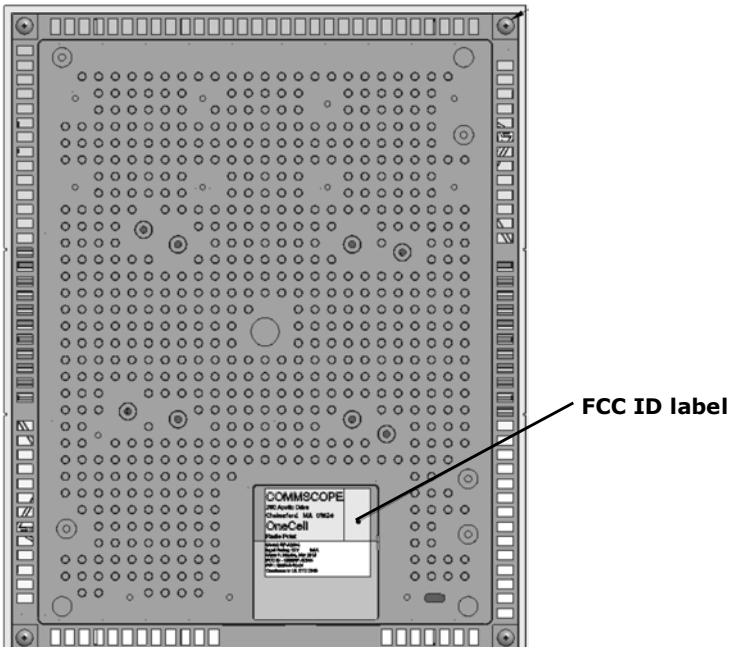

The RP2100 FCC ID is on the label located on the side of the device as shown in the drawing below.

Figure A-5. RP2100 FCC ID label

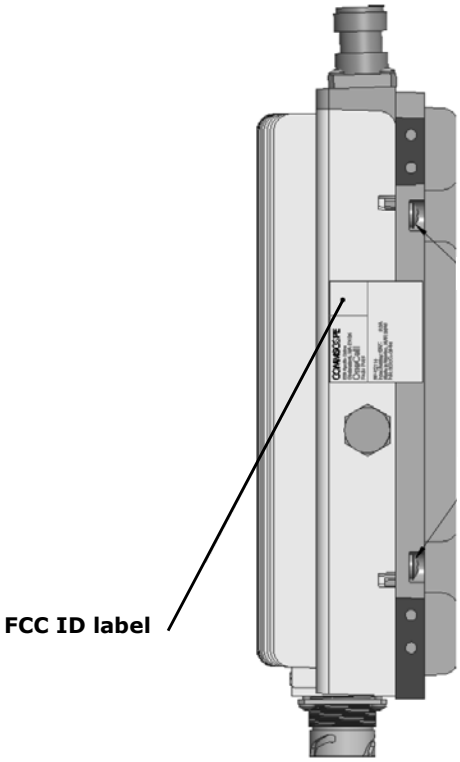

Appendix B

Installation troubleshooting

This section contains information on troubleshooting the ONECELL installation. It includes the LED patterns for the Baseband Controller and Radio points.

Baseband Controller LED patterns	B-2
Radio Point LED patterns	B-4

Baseband Controller LED patterns

The Baseband Controller has four LEDs on the front panel. The following table shows

- Display pattern for each LED
- What the pattern indicates
- Action to take, if any, to resolve the issue

LED	Display Pattern	Indicates	Action to Take
STATUS	Green, solid	Power On Sectors up	None
	Amber, solid	Self-test failure	Replace Baseband Controller
	Green, blinking	Firmware upgrade from DMS Sectors not up	None
	Amber, blinking	No configuration from DMS	• Check DMS availability • Check if the provisioning is correct • Escalate to operator
	OFF	BC rebooting after upgrade	None
	Red, solid*	Error in system - software or hardware issues detected	Replace Baseband Controller Module
RP ERROR	Green, solid	Power On	None
	Amber, solid	Self-test failure	Replace Baseband Controller
	Amber, blinking	No Radio Points connected	Check RP cable
	Off	Radio Points connected, firmware upgrade from DMS	None
	Red, blinking	Radio Point alarm - PLL state unlock; service impacting alarm from Radio Point (alarm in one or more RP)	Check 1588 VLAN configuration

LED	Display Pattern	Indicates	Action to Take
TIMING LED	Green, solid	Power On, timing	None
	Amber, solid	Self-test failure	Replace Baseband Controller
	Amber, blinking	No timing	Check GPS antenna connection feed
	Off	Firmware upgrade from DMS	None
	Red, solid*	Error in system GPS module down Software/Hardware issues	Replace Baseband Controller Module
CORE LED	Green, solid	Power On Connection to MME	None
	Amber, solid	Self-test failure	Replace Baseband Controller
	Amber, blinking	No connection to MME IPsec is up	• Check the MME configuration on the BC • Check if MME is reachable
	Off	Firmware upgrade from DMS	None
	Red, blinking	Internet connection IPsec down	• Check if Security Gateway is reachable • Check security credentials
	Red, solid*	No Internet Interface hardware issues	Replace Baseband Controller Module
* Note: When all of the LEDs are solid red, there is a BC hardware failure.			

Radio Point LED patterns

This section contains LED patterns for RP5200 series, RP5100 series and RP2000 series.

RP5100i/RP5200i LED patterns

The Radio Point RP5100i/RP5200i supports six LEDs on the front cover.

Indicators are for

- four radios (one for each)
- ETH 1 – MR PORT:POE++, POE+, Ethernet link
- ETH 2– SR PORT:POE++, POE+, Ethernet link

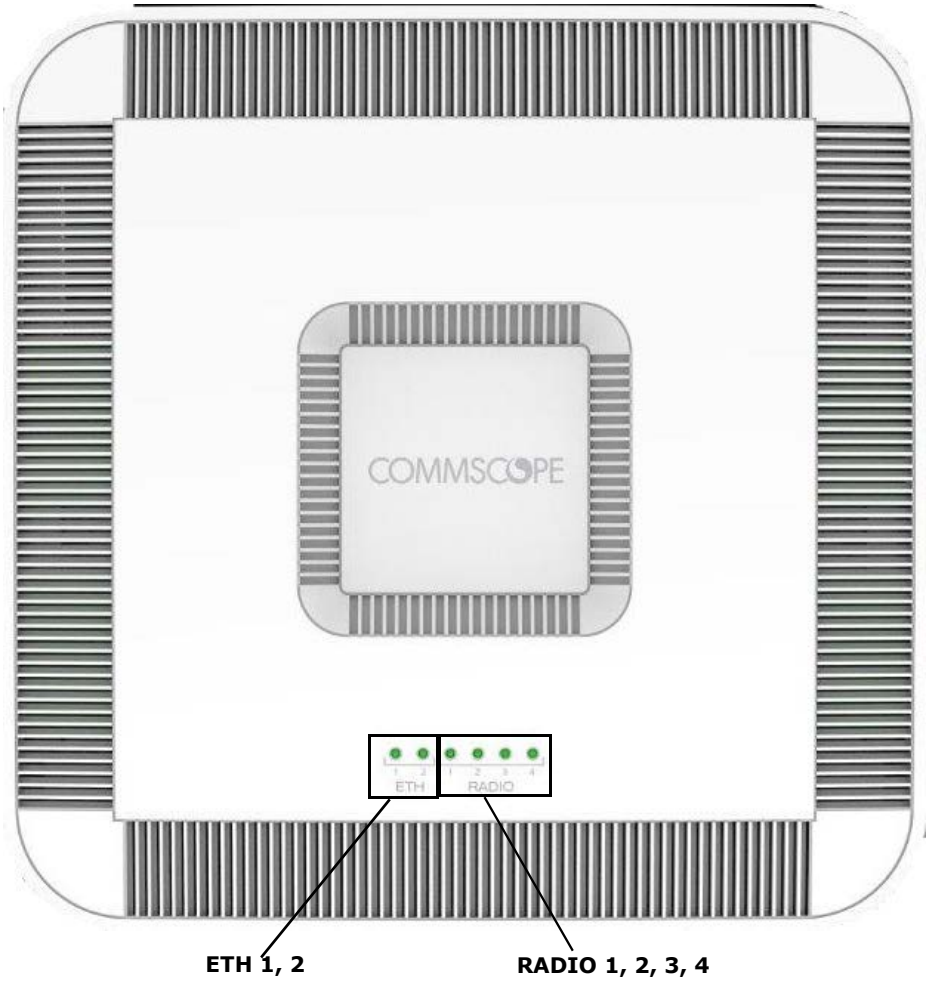

The following table shows:

- Display pattern for each LED
- What the pattern indicates
- Action to take, if any, to resolve the issue

LED	Display Pattern	Indicates	Action to Take
RADIO 1 RADIO 2 RADIO 3 RADIO 4	Green, solid	Power On, transmitting	None
	Amber, solid	• RFTxState OFF • No Controller Assigned • No Timing	• Check 1588 VLAN configuration • Verify that the Radio Point is in STANDBY because more than 32 RPs are connected
	Red, solid	• No connection to Controller • HW error • Low Power	Hardware error – replace Radio Point
	Green, blinking	Firmware upgrade	None
	Amber, blinking	RF module Self-Test Failure	Replace Radio Module
Eth 1	Green, solid	Power On, PoE++ power	None
	Amber, solid	Link up, no power	Check that the Ethernet cable is connected to the Radio Point
	Green, blinking	PoE+ power	None
	Amber, blinking	Platform Self-Test Failure	Replace Radio Point
	Red, solid	Ethernet port error	• Connect the Ethernet cable between the Baseband Controller and Radio Point • Replace Radio Point
Eth 2	Green, solid	Power On, PoE++ power	None
	Amber, solid	Link up, no power	Check that the Ethernet cable is connected to the Radio Point
	Green, blinking	PoE+ power	None
	Amber, blinking	Platform Self-Test Failure	Replace Radio Point
	Red, solid	Ethernet port error	• Connect the Ethernet cable between the Baseband Controller and Radio Point • Replace Radio Point
* **Note**: When all of the LEDs are solid red, there is an RP hardware failure.			

RP5100r LED patterns

The Radio Point RP5100r has one LED. The following table includes the LED patterns.

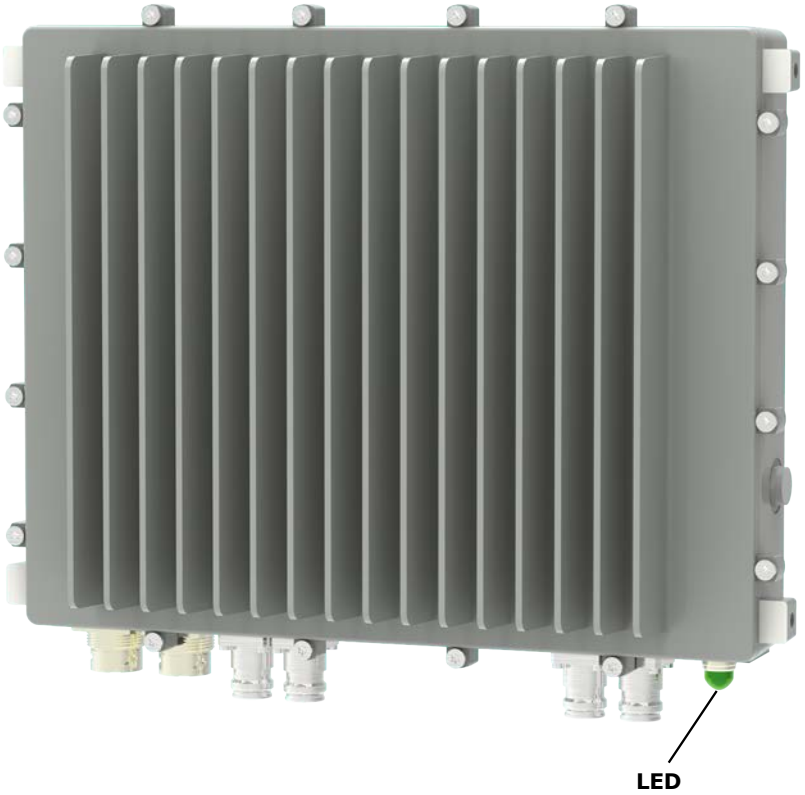

Display Pattern	Indicates	Action to Take
Green, blinking	• Not all available radio modules are in use • RFTx ON for all radio modules	No action required
Green, solid	• All available radio modules are in use • RFTx ON for all radio modules	No action required
Red, solid	Error in the system. • No module connected to the BC • All modules have low power	Replace Radio Point
Red, blinking	No modules in use **Note:** The radio modules may be connected to the BC.	• Check the connection between the RP and BC. • Check that the BC admin status is UP.
Green, fast blinking	Software upgrade	No action required

RP2000 series LED patterns

The RP2000 and RP2100 Radio Points have one LED. The LED for the RP2000 (Indoor) is on the front cover. The LED for the RP2100 (Rugged) is on the bottom of the Radio Point where the Ethernet cable port is located. The following table shows:

- Display pattern for each LED
- What the pattern indicates
- Action to take, if any, to resolve the issue

LED	Display Pattern	Indicates	Action to Take
STATUS	Green, solid	Power On RFTx state is ON	None
	Amber, solid	Self-test failure	Replace RP
	Green, blinking	Firmware upgrade Connected to Baseband Controller	None
	Amber, blinking	PLL state – unlock RFTx state – OFF or suspended L2 path verification failed Admin state – STANDBY	• Check 1588 VLAN configuration • Verify RP is in STANDBY because more than 32 Radio Points are connected to the same Baseband Controller
	Red, blinking	No connection to Baseband Controller (http)	• Connect the Ethernet cable between the Baseband Controller and Radio Point • Replace RP
	Red, solid	Error in system – software or hardware issues Interface issues detected AdminState – UNLOCKED	• Connect the Ethernet cable between the Baseband Controller and Radio Point • Upgrade Radio Point • Replace Radio Point

Appendix C

Specifications

This appendix contains specifications for CommScope ONECELL, including FCC information and technical data.

Environmental and physical specifications	C-1
SPF/SPF+ specifications	C-3

Environmental and physical specifications

The following table lists the electrical ratings and technical data for the Baseband Controller, RP5100 series and RP2000/RP2100.

Table C-1. Environmental and Physical specifications

Baseband Controller	
Environmental	Operating Temperatures: 0°C to 40°C Operating Humidity 10%-90% Non-Condensing
Power Requirements	120/230 VAC,1.7/0.85 A, 50/60 Hz
Power Consumption	204W Typical / 216W Maximum
Dimensions	1 Rack Unit Chassis hosts 2 Baseband Controller module units 19" W x 1.75" H x 18.8" D (483mm W x 44.4mm H x 477mm D)
Weight	Single BC 13.1 lbs (5.9 kg) Dual BC 19.1 lbs. (8.7 kg)
RP5100i	

Table C-1. Environmental and Physical specifications *(continued)*

Environmental	Operating Temperatures: 0 to 50°C (Plenum rated: UL-2043) Operating Humidity 10%-95% Non-Condensing Operating temperatures: 0°C to 50°C Active Cooling/Fans, acoustic noise: 39.5 dBA at 25C
Power Requirements	IEEE802.3bt-type 4 PoE++
Power Consumption	Up to: 72W (26W + 11.5W per RM)
Dimensions	13.54" W x13.54 H x 3.35" D (344.0 mm W x 344.0 mm H x 85.0 mm D)
Weight	8.82 lbs (4 kg)
RP5100r	
Environmental	Operating Temperatures: 0 to 50°C (Plenum rated: UL-2043) Operating Humidity 10%-95% Non-Condensing Operating temperatures: 0°C to 50°C Active Cooling/Fans, acoustic noise: 39.5 dBA at 25C
Power Requirements	IEEE802.3bt-type4 PoE++
Power Consumption	Up to: 72W (26W + 11.5W per RM)
Dimensions	14.9" W x 12.64" H x 4.06" D (378.7 mm W x 321.1 mm H x 102.5 mm D)
Weight	21.7 lbs (9.85 kg)
RP2000	
Environmental	Operating Temperatures:0°C to 50°C (Plenum rated: UL-2043) Operating Humidity: 10%-95% Non-Condensing
Power Requirements	802.3at PoE+
Power Consumption	22W Typical / 25.5W Maximum
Dimensions	7.4" W x 9.25" H x 1.75" D (188mm W x 235mm H x 45mm D)
Weight	2.6 lbs (1.2 kg)
RP2100	
Environmental	Operating Temperatures: -40C to 60°C
Power Requirements	802.3at PoE+
Power Consumption	22W Typical / 25.5W Maximum

Table C-1. Environmental and Physical specifications *(continued)*

Dimensions	9.3" W x 9.1" H x 3.0" D (236mm W x 230mm H x 76mm D)
Weight	8 lbs (0.6 kg)

SPF/SPF+ specifications

The following table lists the SPF and SPF+ specifications required for the Baseband Controller.

1G SFP LC SX Transceiver; 220M to 1K M
1G SFP LC LX transceiver, 550M 10K M
10G SFP+ LC SR Transceiver; Multi mode 26M to 300M
SFP-10G-LR Transceiver; Single mode 10KM
10G Direct attach SFP+ cable; Twin ax Cable; 7M (must be compatible with HP & Cisco switches

Appendix D

Field Replaceable Units

This appendix contains instructions for replacing Baseband Controller modules and Radio Points in the ONECELL system.

FRU overview	D-2
Replacing Baseband Controller modules	D-2
Replacing RP5200i Radio Points	D-16
Replacing RP5100 series Radio Points	D-40
Replacing RP5100i/RP5200i RF modules	D-70
Replacing RP2000 series Radio Points	D-77
RP post-replacement verification	D-110

FRU overview

Field Replaceable Units (FRUs) are modules that can be replaced on-site in case of equipment failure. On-site and off-site activities are required when replacing modules. The off-site activities are achieved by using DMS.

This appendix contains details for replacing Baseband Controller (BC) modules and Radio Points (RP).

Replacing Baseband Controller modules

The following procedure provides instructions for replacing the ONECELL Baseband Controller (BC) module in a live network environment.

This procedure is divided into four sections:

- Prerequisites
- Off-site activities
- On-site activities
- Post-Install Verification

Prerequisites

The following table contains a checklist of prerequisites for replacing a BC.

Step	Prerequisite	Completed
1	UDEF file for DMS import	
2	SSH password	
3	Replacement ONECELL BC module	
4	Laptop for Web GUI access	
5	Config.tar file containing operator information **Note:** This file should be saved on the Laptop that will be used for WebGUI access.	
6	License file (if applicable) **Note:** This file should be saved on the Laptop that will be used for WebGUI access.	

Step	Prerequisite	Completed
7	Configuration details for WebGUI commissioning **Note:** These parameters are derived from the failed unit being replaced.	
8	Ethernet cable **Note:** Required for connecting the laptop to the ONECELL Baseband Controller Management port	
9	DMS FTP IP address	

Off-site activities

Before replacing the BC module, import a new EDF file to the DMS. This file contains the BC MAC address and HeMs password specific to the new BC.

1. Access the FTP location on DMS using ftp protocol, port 2100.
2. Upload the EDF file to */appdata/dms/import/factory*.
3. Access the DMS Network console from a supported Web Browser.

   NOTE: The DMS GUI supports Microsoft Edge 81 and later, Google Chrome 81 and later, and Mozilla Firefox Quantum 68 and later.

4. Enter the IP address for the Network Management portal.

   `http://<IP Address DMS server>/networkconsole`

   The Sign In dialog box displays.

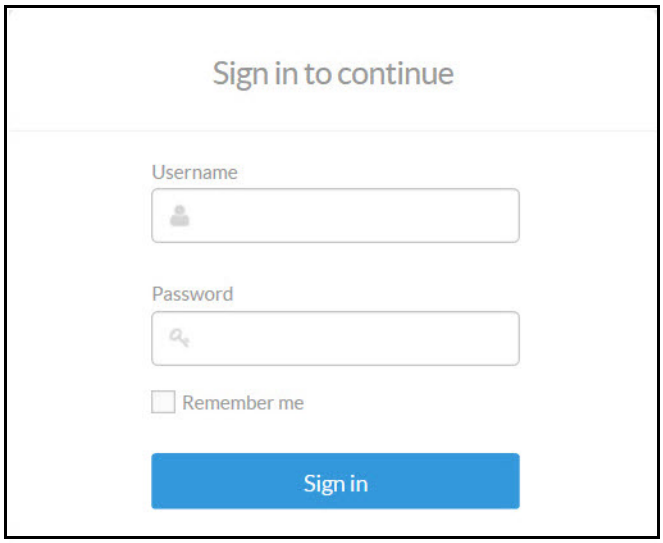

5. Enter Username and Password. The Search Device screen displays.

6 Enter the device Mac ID.

The Network Management Portal opens.

7 Select Import tab located in the left margin of the Device console.

8 Select File Import.

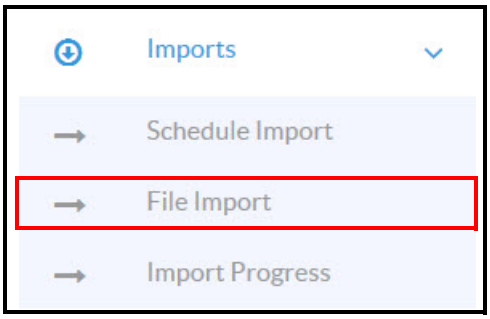

9 Browse and select the desired import file. The EDF file format is xml.

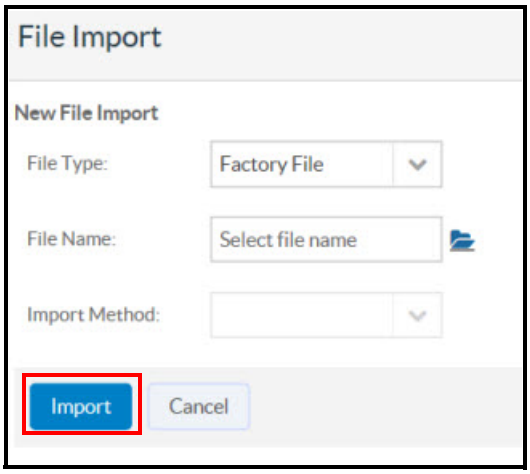

10 Click **Import**.

11 Click **Import Progress**. Wait for the import to be completed.

Import Progress

File Type	Operation/File Name	Import Method	Start time	End time	Import Status		Devices Impacted
File Import	uedf-factory-NW-0005B9A10_Sim_CU.xml	FACTORY	2015-05-19 18:49:11 IST		In Progress	View Details	
File Import	servicesetting_ServiceSettings_new.xml	COMPLETE	2015-05-19 18:38:33 IST		In Progress	View Details	
File Import	servicesetting_ServiceSettings_new_20150429145834.xml	AUTO	2015-05-16 00:14:35 IST		In Progress	View Details	2
File Import	servicesetting_ServiceSettings_new.xml	AUTO	2015-05-15 22:49:20 IST		In Progress	View Details	
File Import	servicesetting_ServiceSettings_new.xml	AUTO	2015-04-30 11:32:00 IST		In Progress	View Details	112
File Import	servicesetting_ServiceSettings_new_20150429145834.xml	COMPLETE	2015-04-30 10:29:12 IST		In Progress	View Details	112

12 Click the Operational History icon in the upper right corner of the page.

The Operational History page displays. Check that the file import was successful.

Operational History

View : 20 entries

Start Time	Category	Method	File Name	Operation Type	Operation Status		De
2015-05-15 18:16:08 IST	Proactive Scheduled Job	All	Shiva	Provision	Success	View Details >	
2015-05-15 18:10:41 IST	Service Package		S1000 - 1.0.1.0-NR06-10	Service Package Save	Success	View Details >	22
2015-05-15 18:04:56 IST	Service Package			Service Package Upgrade	Success	View Details >	22
2015-05-15 17:02:14 IST	Reports	Pws Report Generation	FemtoLTE_CMAS.XML	Pws Report	Success	View Details >	
2015-05-15 16:22:42 IST	Reports	Pws Report Generation	FemtoLTE_CMAS.XML	Pws Report	Success	View Details >	
2015-05-15 13:05:17 IST	Service Package		S1000 - 1.0.1.0-NR06-10	Service Package Save	Success	View Details >	
2015-05-15 13:01:20 IST	Service Package		S1000 - 1.0.1.0-NR06-10	Service Package Save	Success	View Details >	22
2015-05-15 13:00:11 IST	File Import	FACTORY	uedf-factory-RW-0005B9A200_Sim_RP.xml	FACTORY	Success	View Details >	
2015-05-15 12:58:10 IST	File Import	FACTORY	uedf-factory-NW-0005B9A10_Sim_CU.xml	FACTORY	Success	View Details >	
2015-05-15 08:30:02 IST	Purge	SPS Audit Report Purge		SPS Audit Report	Success	View Details >	
2015-05-15 05:30:06 IST	Reports		0005B9-LTEWiFiSC_Delta-device-config-2015-05-15-05-30.txt	Device Delta Report	Success	View Details >	
2015-05-15 05:30:04 IST	Reports	Pws Report Generation	FemtoLTE_CMAS.XML	Pws Report	Success	View Details >	
2015-05-15 05:30:03 IST	Reports	SPS Audit Report Generation	SPS_AUDIT_REPORT_2015-05-15 05:30:02	SPS Audit Report	Success	View Details >	
2015-05-15 05:30:02 IST	Reports	Device State Report Generation	Master-device-status-2015-05-15-05-30	Device State Report	Success	View Details >	

13 Login to the Device console.

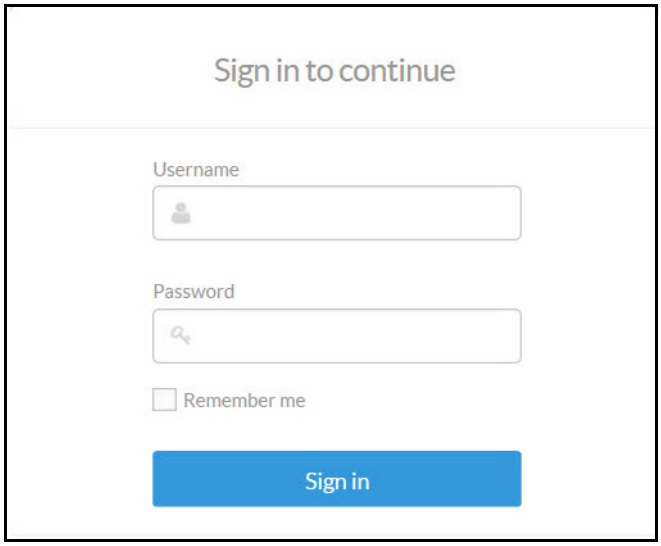

14 Enter the MAC ID of the replacement Baseband Controller.

NOTE: Your CommScope service engineer will provide the new BC MAC ID.

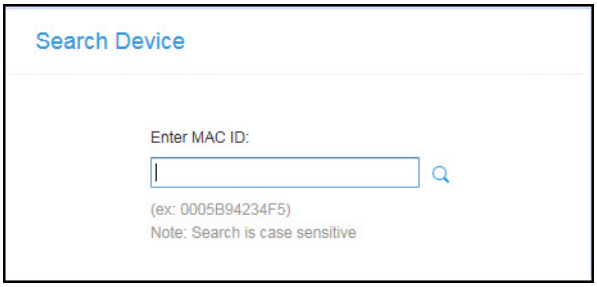

15 Select the Device configuration tab on the left margin.

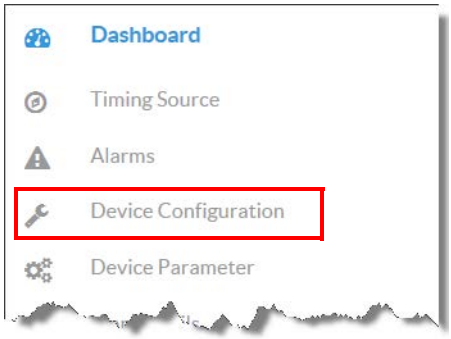

16 Configure the same parameters from the BC being replaced.

17 Select the Dashboard menu item.

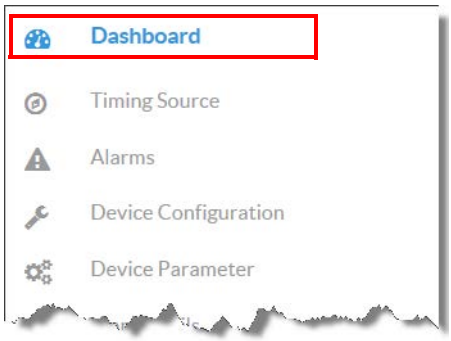

The Controller will display "Out of Service" until the On-site installation is completed.

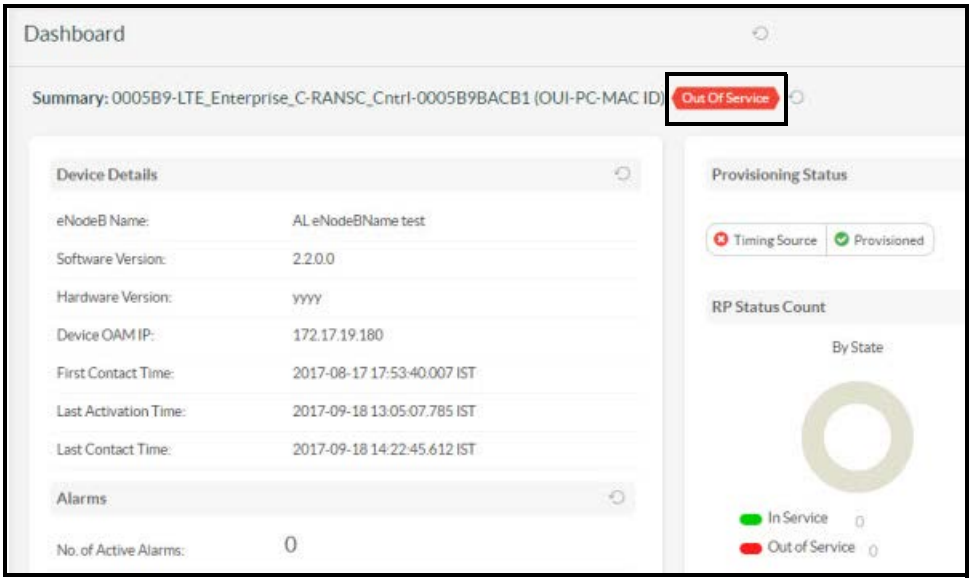

On-site activities

After the off-site activities are complete, you are ready to replace the BC module on-site.

1 Power off the ONECELL Baseband Controller.

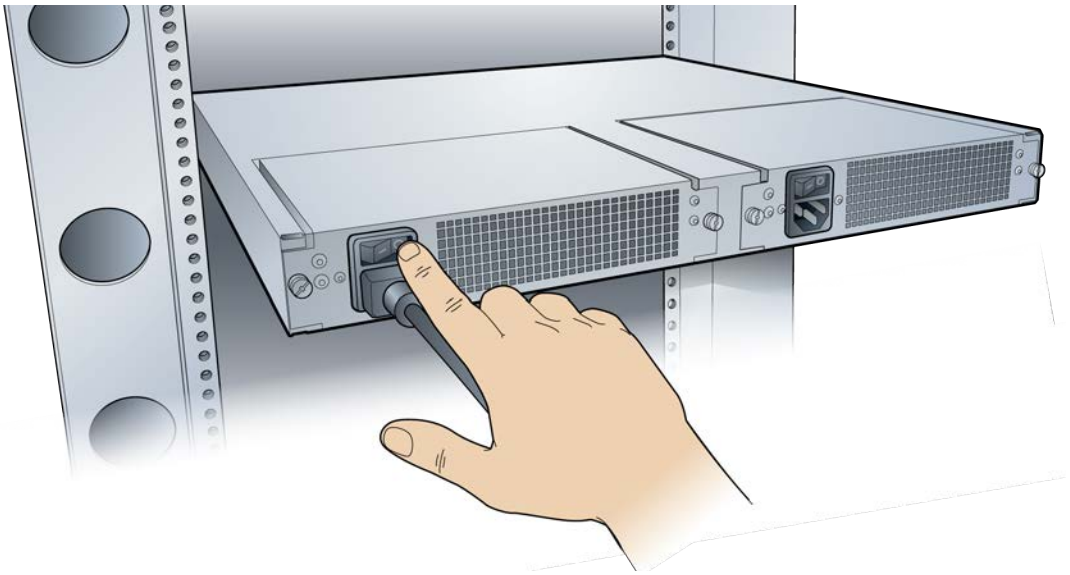

2 Make a note of the existing cables connected to the failed ONECELL BC.

3 Label the cables identifying the port locations on the BC. Disconnect the cables.

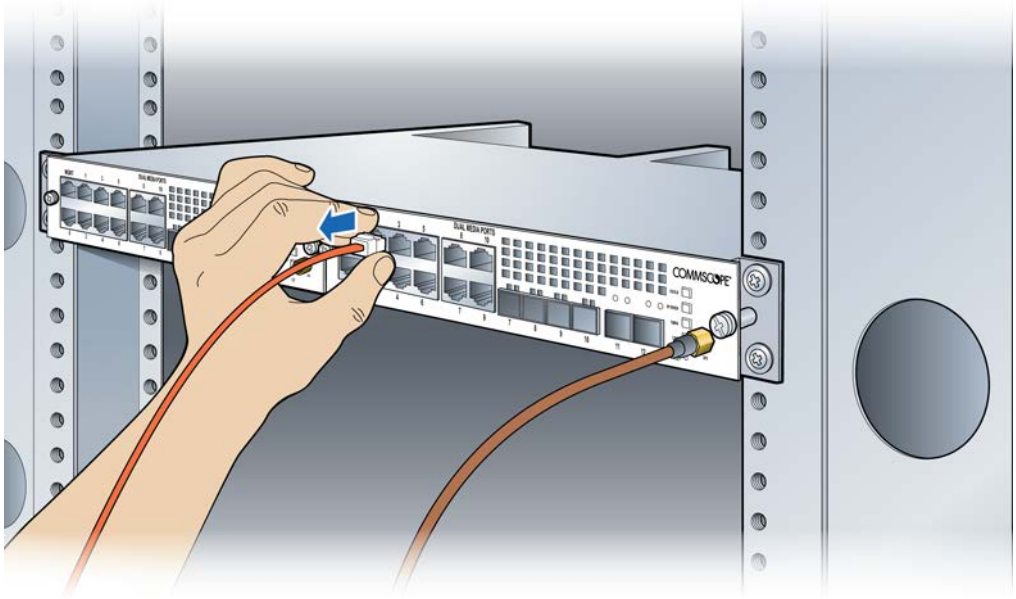

4 Remove the GPS antenna cable from the BC (if applicable).

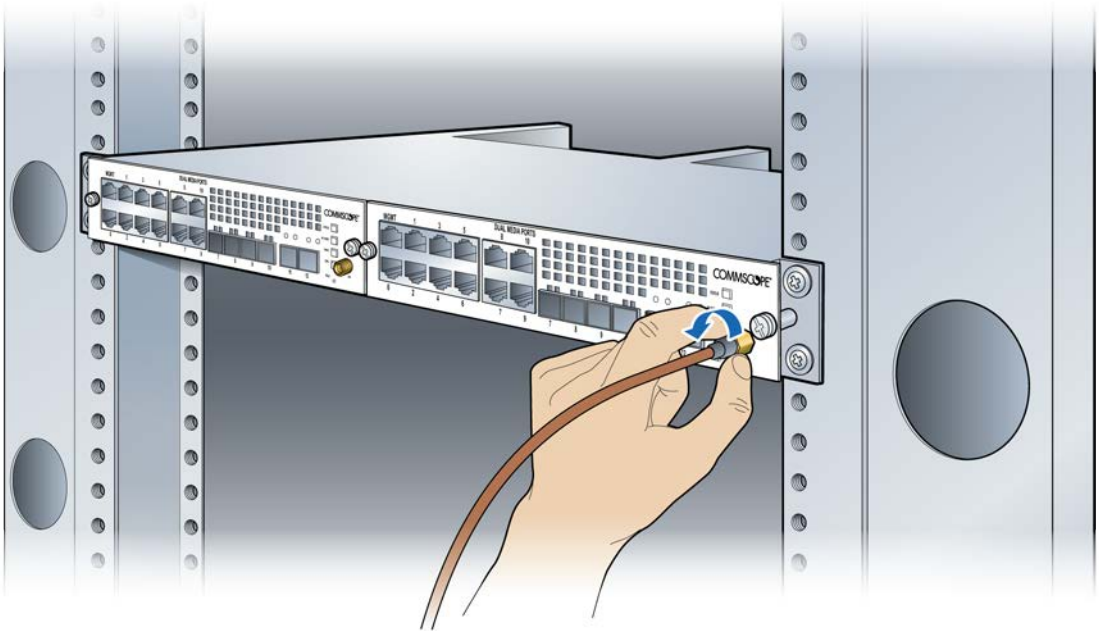

5 Turn the mounting screws on the BC front panel counterclockwise to loosen them and remove the BC module.

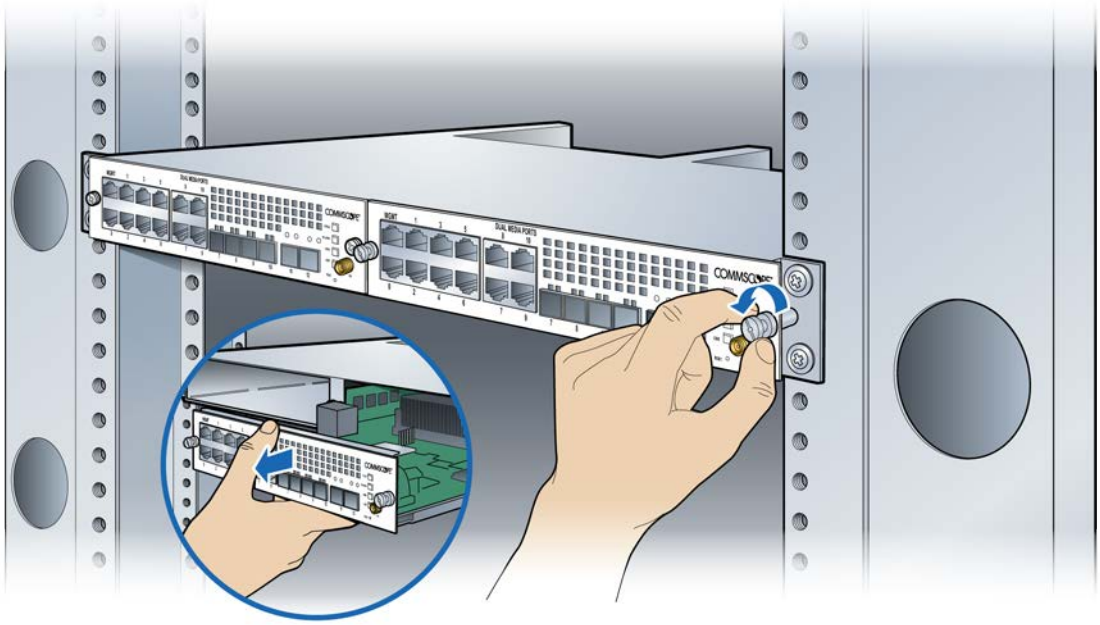

6 Insert the new BC module into the chassis and tighten the mounting screws.

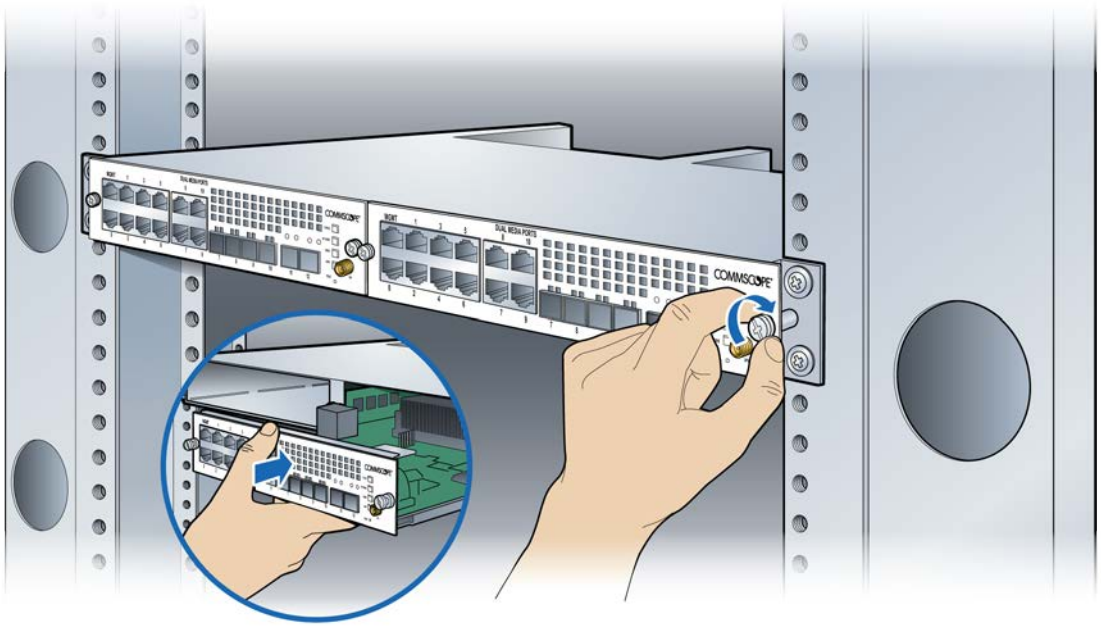

7 Re-connect the cables as noted in step 3.

8 Power on the controller.

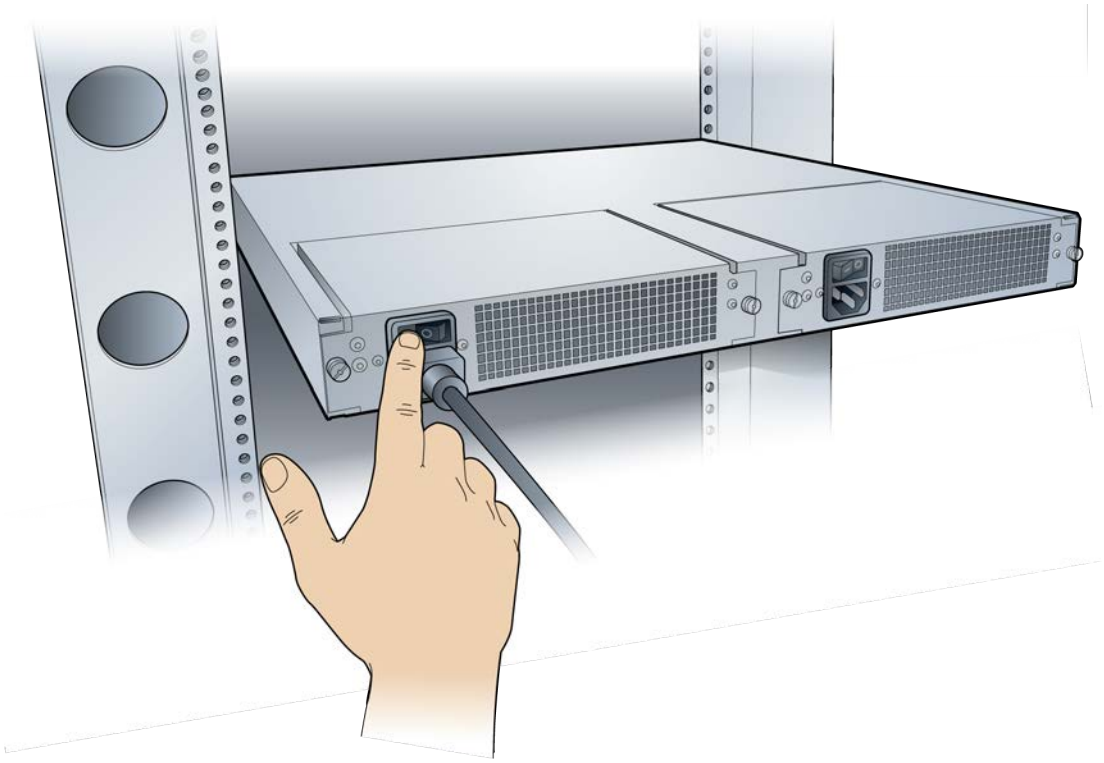

9 Configure the BC.

Post-Install Verification

On-site

The operational state of the ONECELL system can be determined by the LED status on the BC's front panel. Additional information can be attained from the WebGUI status screens.

Off-site

1 Open a supported Web browser.

NOTE: The DMS GUI supports Microsoft Edge 81 and later, Google Chrome 81 and later, and Mozilla Firefox Quantum 68 and later.

2 Enter the IP address for the Device Management portal.

```
http://<IP Address DMS server>/deviceconsole
```

The Sign In dialog box displays.

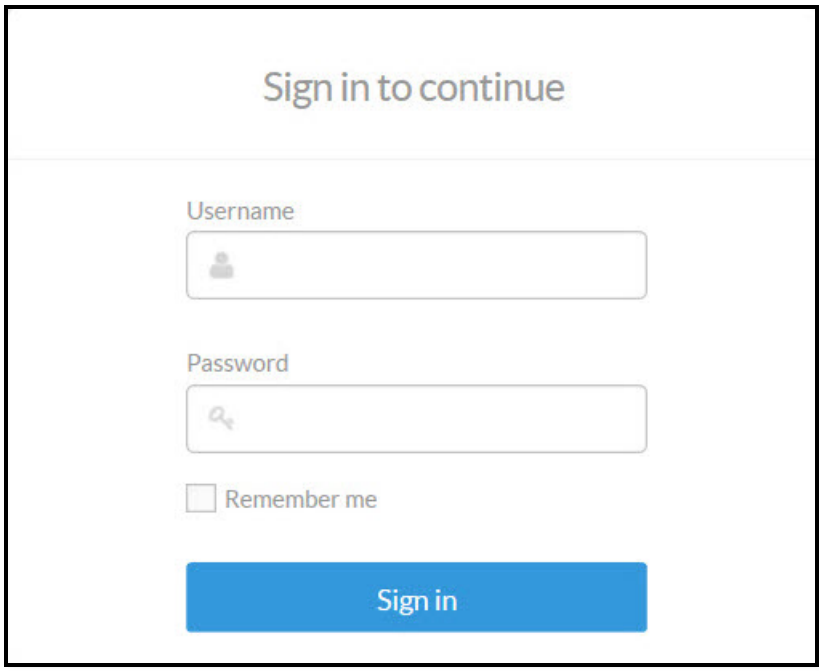

3 Enter Username and Password. The Search Device screen displays.

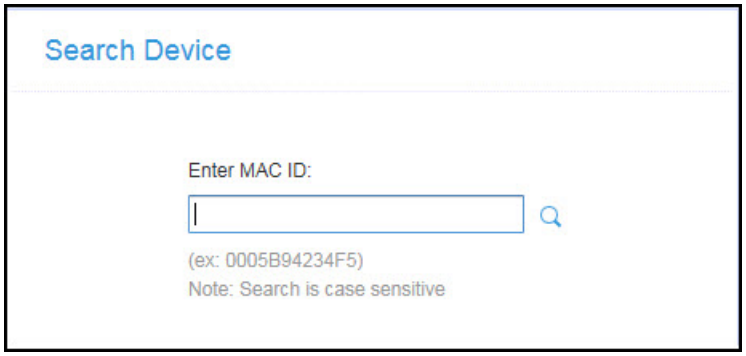

4 Enter the MAC ID of the new BC.

The BC Dashboard displays. The Summary at the top of the page should show "Ready."

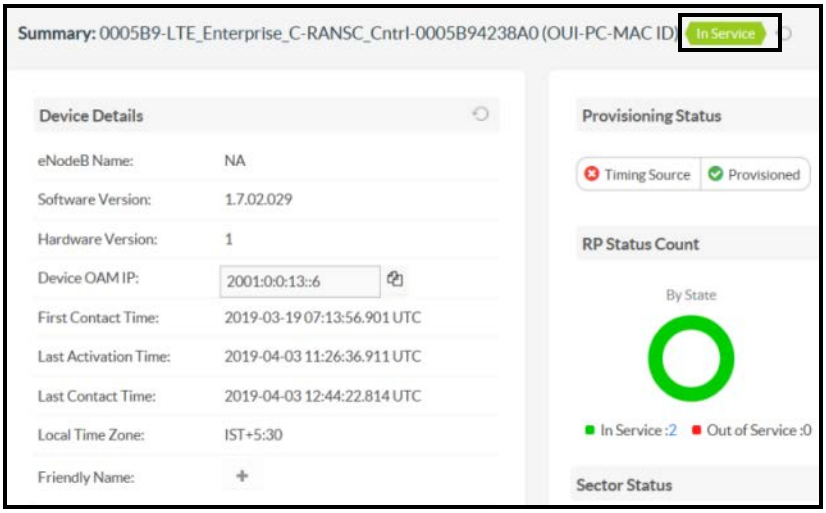

NOTE: Provision the remaining Device configurations to align with the failed BC configuration on the DMS Device Configuration page.

5 Scroll to the bottom of the page to view the Device PnP status.

If all of the PnP boxes have green checks, the BC replacement is successful. Stop here.

If one or more of the PnP boxes are red, those activities failed. Go to the Device PnP page to identify the failed activity.

Replacing Radio Points prerequisites and on-site activities

Prepare the network for the Radio Point replacement.

- Prerequisites
- On-site activities

Prerequisites

The following table contains a checklist of prerequisites for replacing an RP.

	Prerequisite
	SSH password
	Replacement ONECELL RP module

	Prerequisite
	Laptop for Web GUI access
	Ethernet cable **Note:** Required for connecting the laptop to the ONECELL Baseband Controller Management port

On-site activities

Before replacing the RP, delete the RP from the system using the WebGUI.

1 Connect the Ethernet cable to the MGMT port on the BC's front panel.

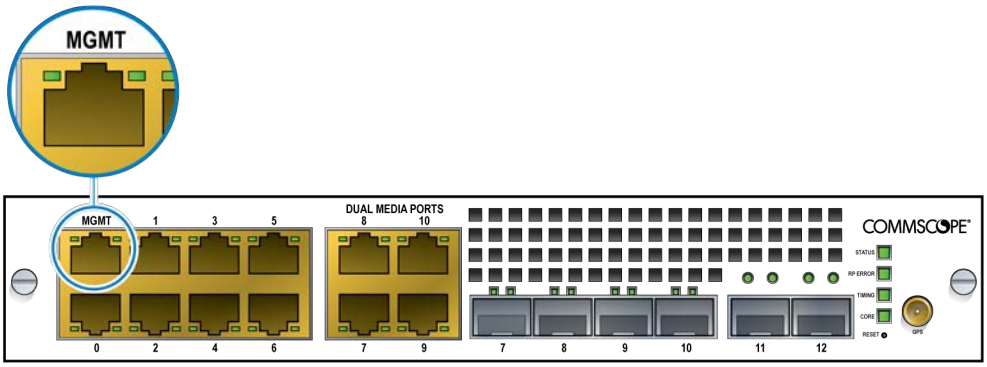

2 Open a supported browser.

3 Enter the IP address for the GUI, using the format below.

https://<IP address of Management Interface>:6002

Example:

`https://192.168.8.1:6002`

The Sign In dialog box appears.

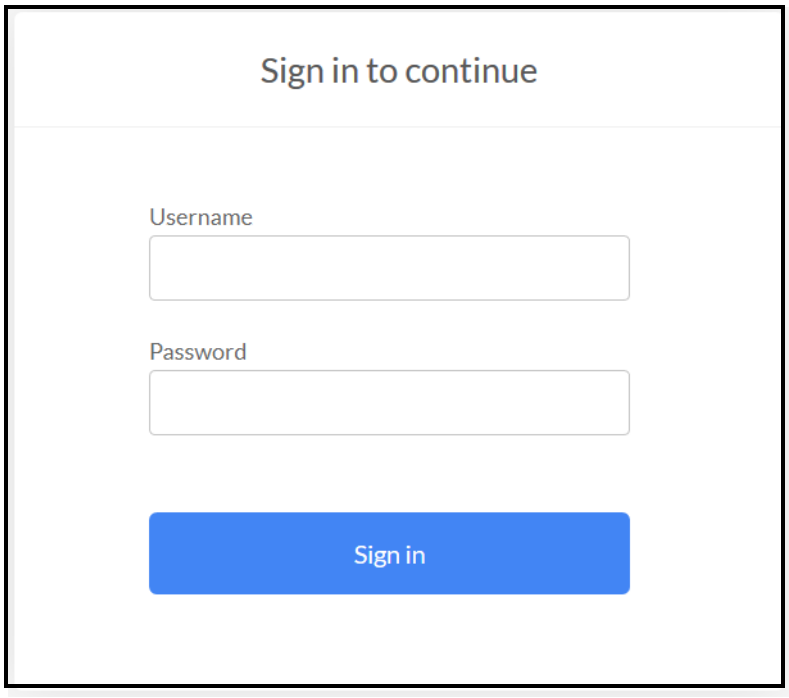

The Dashboard displays.

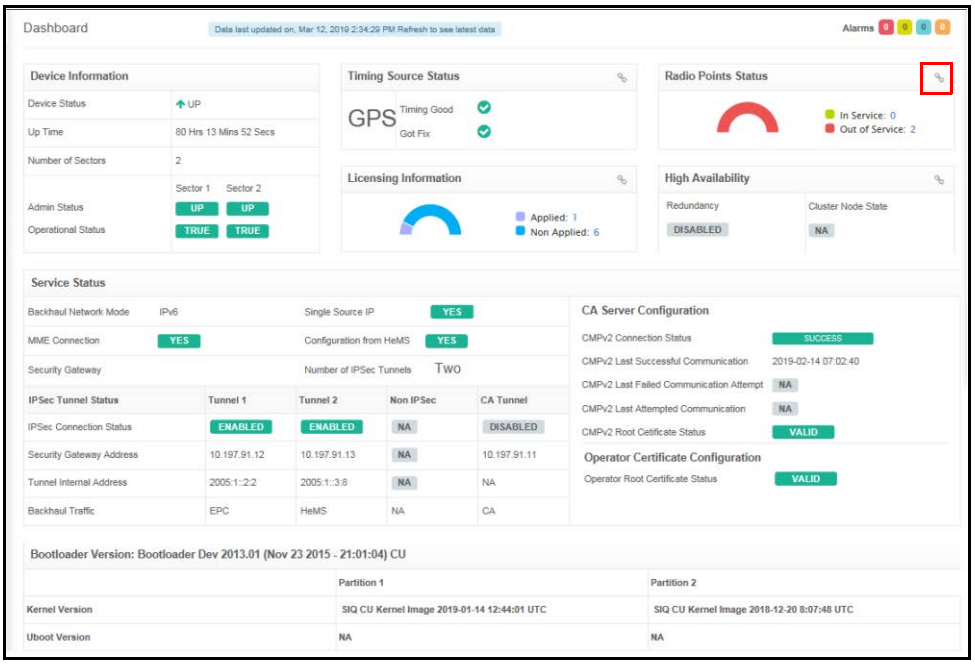

4 On the Dashboard, click the Radio Points link. The Radio Points Dashboard displays.

5 Click the RP Information tab.

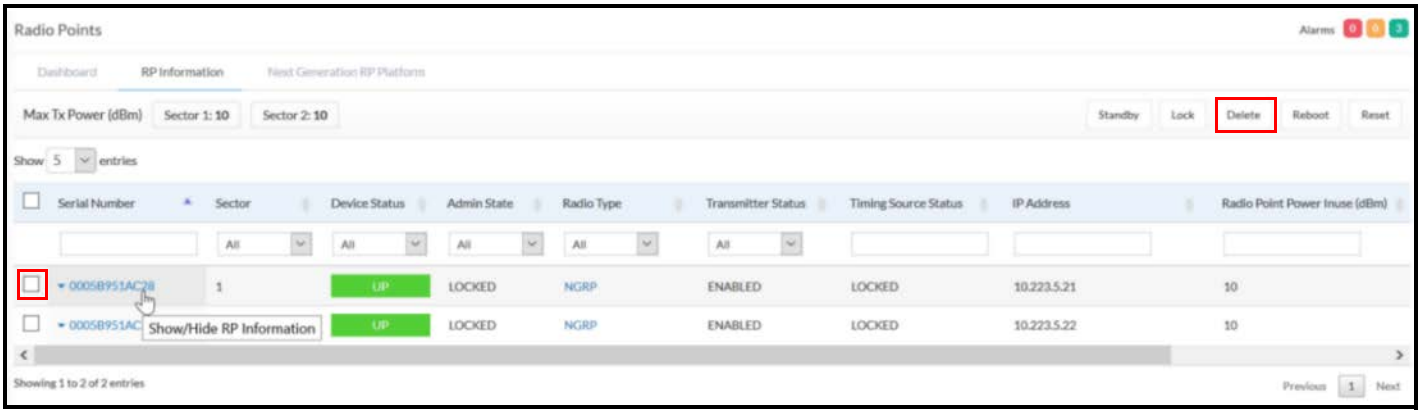

6 If one of the Radio Points is Down, select that RP by checking the box next to it.

7 Click **Delete**.

8 Check the Radio Point Information table to ensure the RP is deleted.

Replacing RP5200i Radio Points

The following procedures provide instructions for replacing a ONECELL RP5200i radio point.

- Ceiling Mount
- Wall mount

- Flown mount
- Pole mount

Ceiling Mount

WARNING

Disconnect the Ethernet cable(s) on the RP to remove the power. Failure to do so will cause damage to the RP.

1. Remove the ceiling that is adjacent to the RP.
2. Remove the RP from the ceiling. Slide the RP in the direction of the LEDs.

   When the RP reaches the end of the key, tilt down to remove.

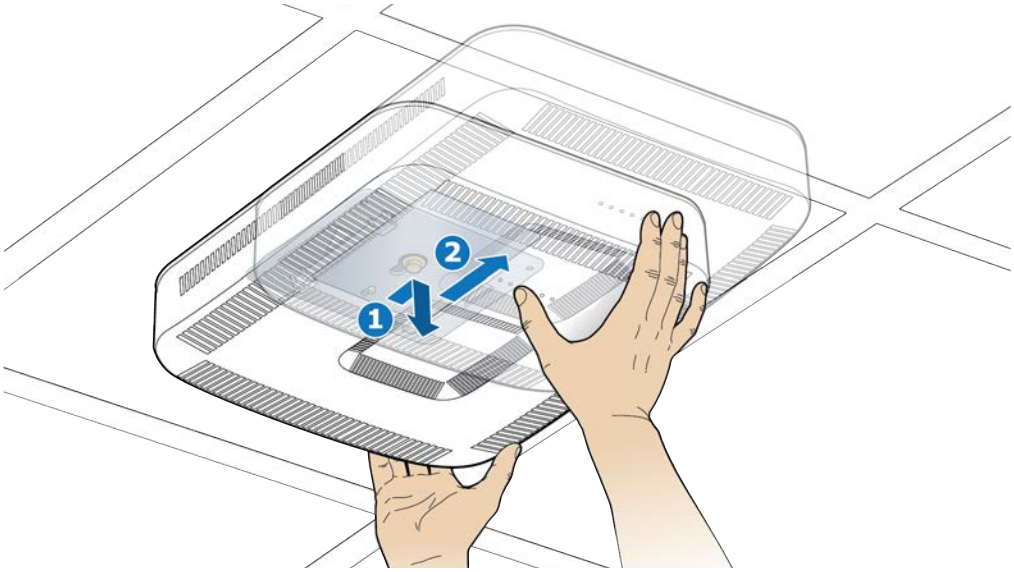

3. Disconnect the Ethernet cables on the RP.

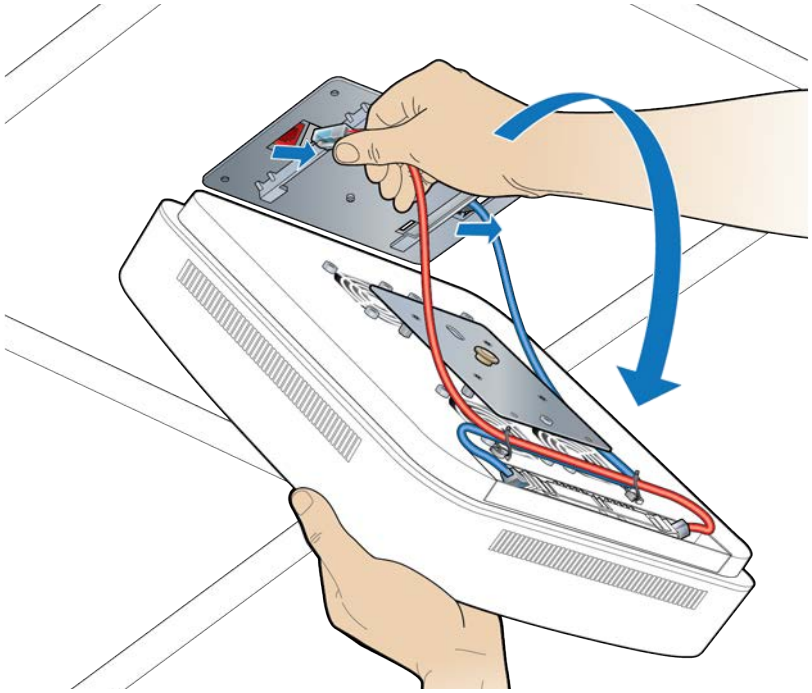

4 Remove the RP plate from the RP5200i. Set RP5200i aside.

5 Attach the RP plate to the replacement RP5200i.

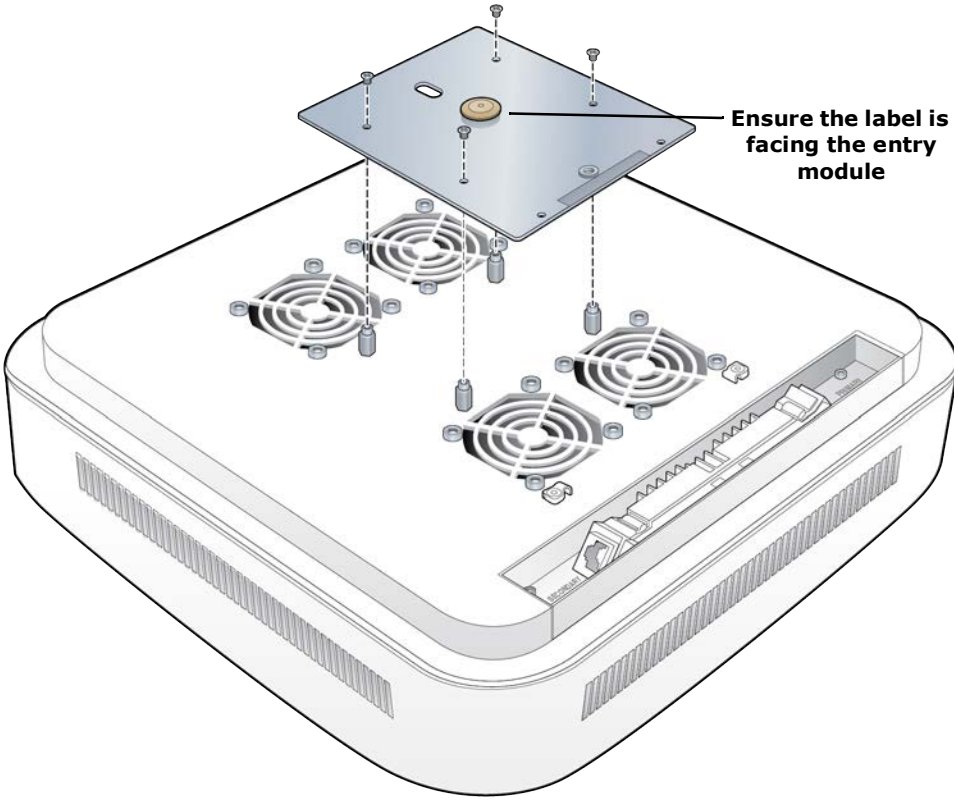
Ensure the label is facing the entry module

6 Connect the Red and Blue Ethernet cables to the RP as shown below.

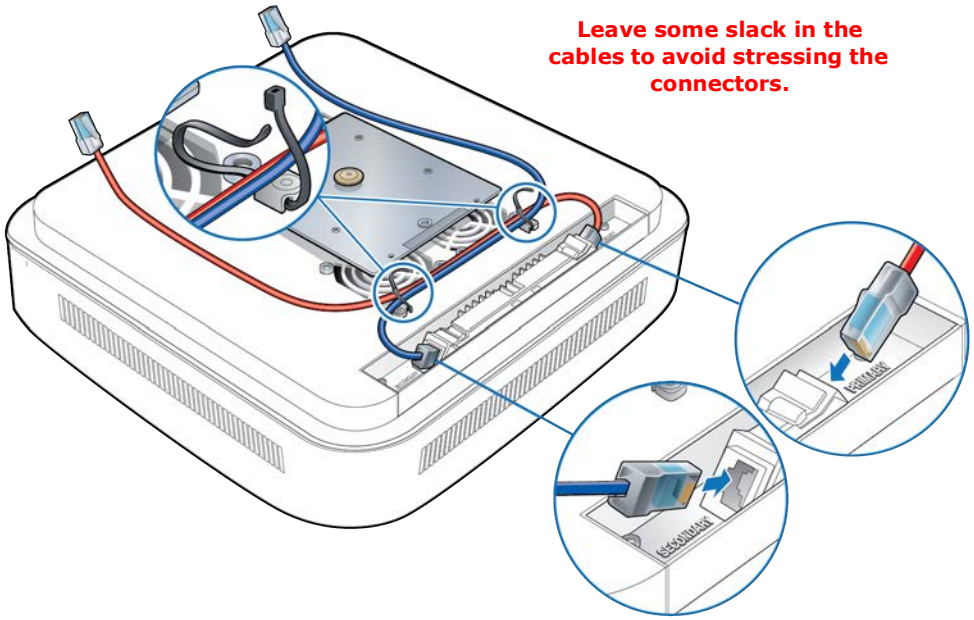

7 Connect the Blue and Red Ethernet cables from the RP to the connectors on the ceiling plate.

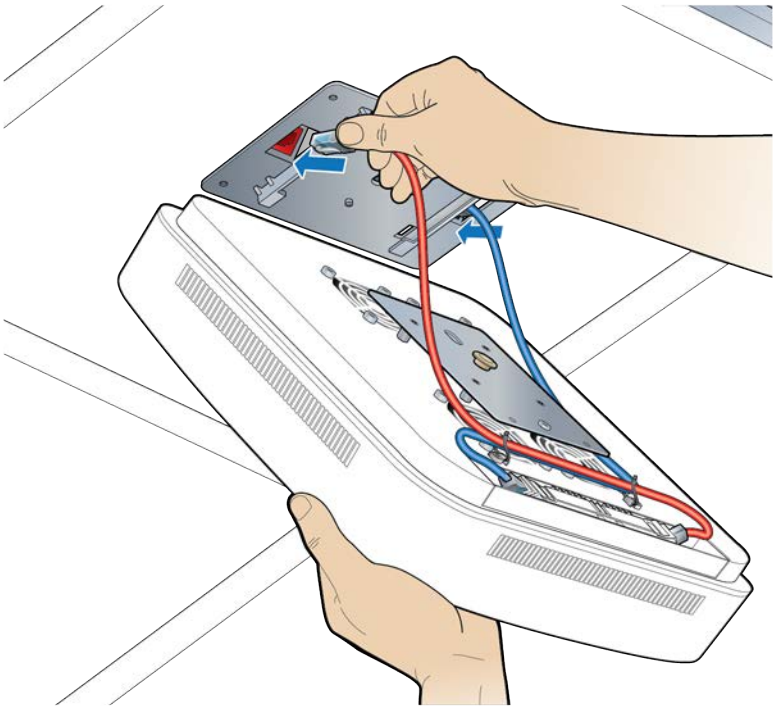

8 Attach the RP to the octagon plate.

- **a** Align the keyhole opening on the octagon mounting plate with the button on the RP mounting plate.
- **b** Insert the RP into the octagon box mounting plate slot and slide until the RP plate meets the tabs on the octagon box plate.
- **c** Lift the RP vertically and slide it into the locked position.

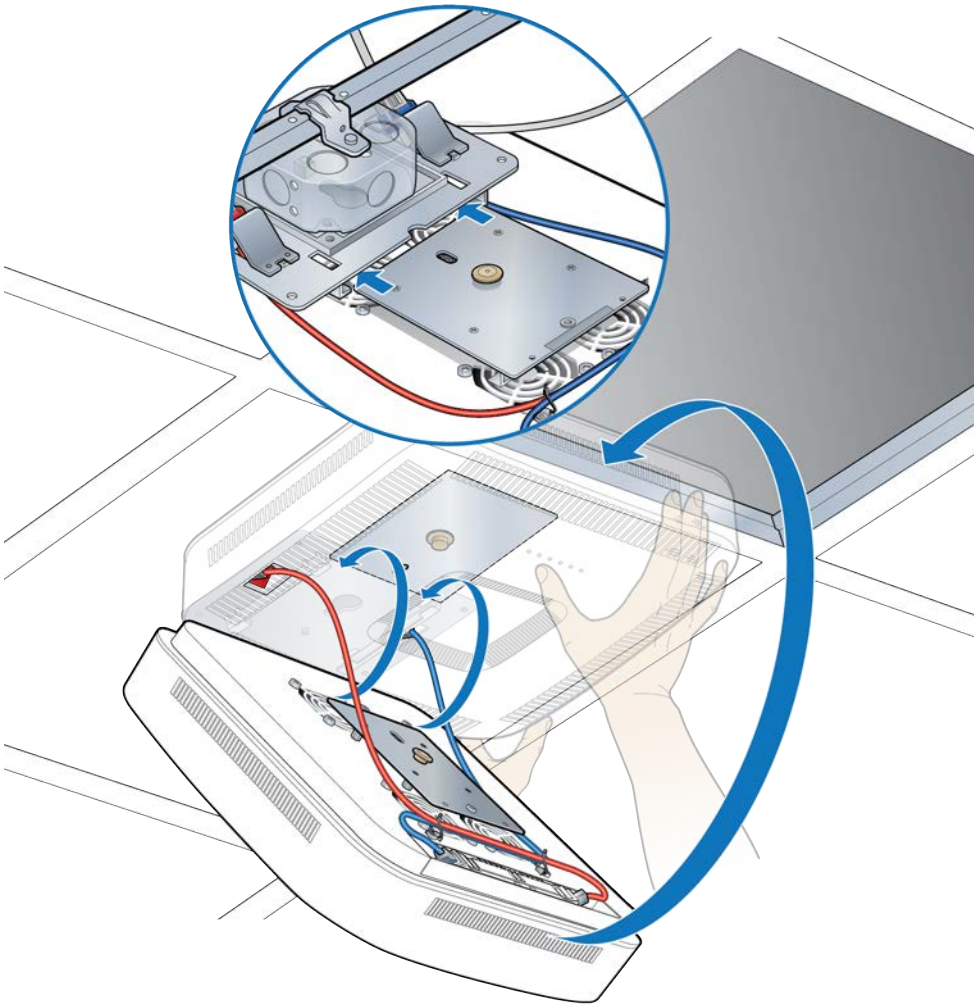

9 Replace the ceiling tile next to the Radio Point.

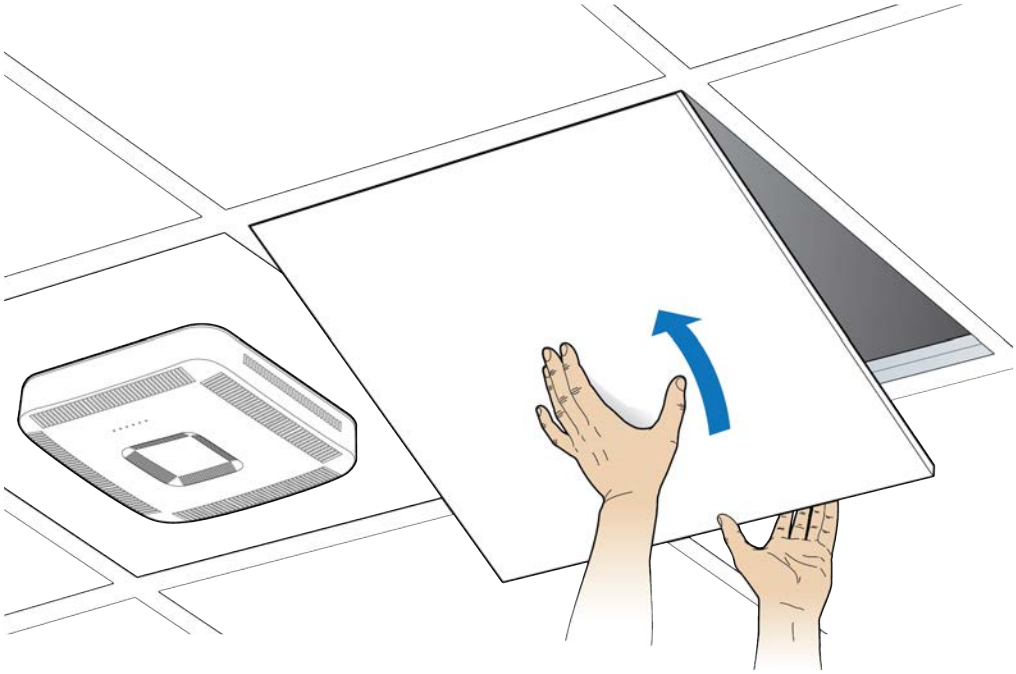

10 Verify the RP5200i installation. The operational state of the RP can be determined by the LED status on the RP. Additional information can be attained from the WebGUI status screens. See Post-Install Verification.

Wall mount

WARNING

Disconnect the Ethernet cable(s) on the RP to remove the power. Failure to do so will cause damage to the RP.

1 Gently pull the RP away from the wall and lift upward.

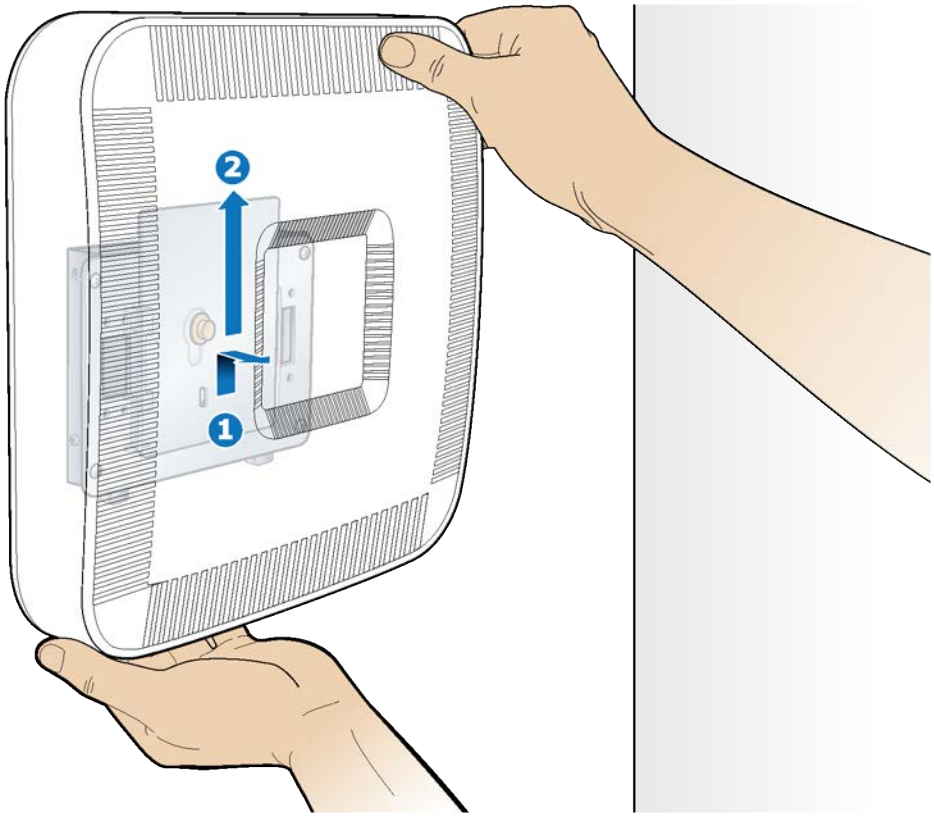

2 When the button on the RP plate is disengaged from the wall plate, tilt the RP downward.

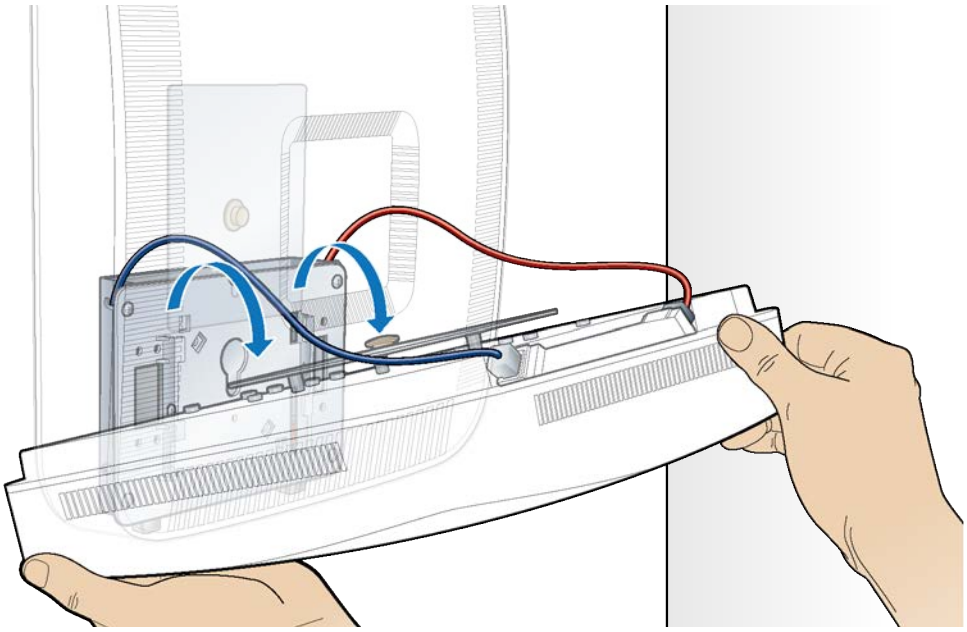

3 Disconnect the Red and Blue cables from the RP.

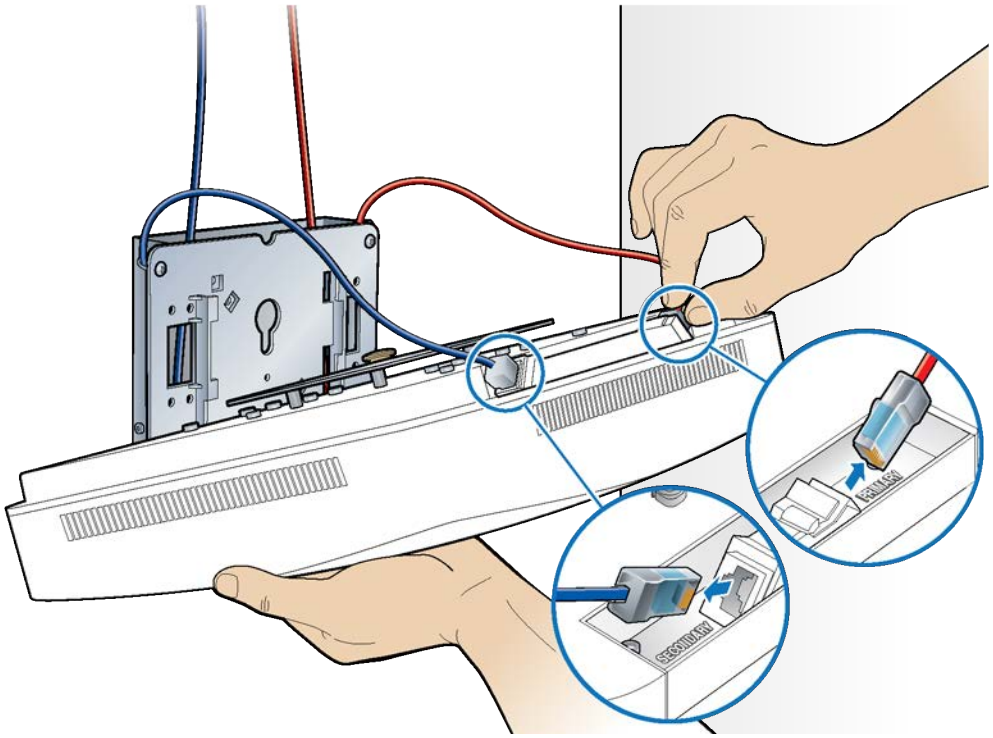

4 Remove the RP plate and set the RP, plate and screws aside.

5 Attach the RP plate to the replacement RP.

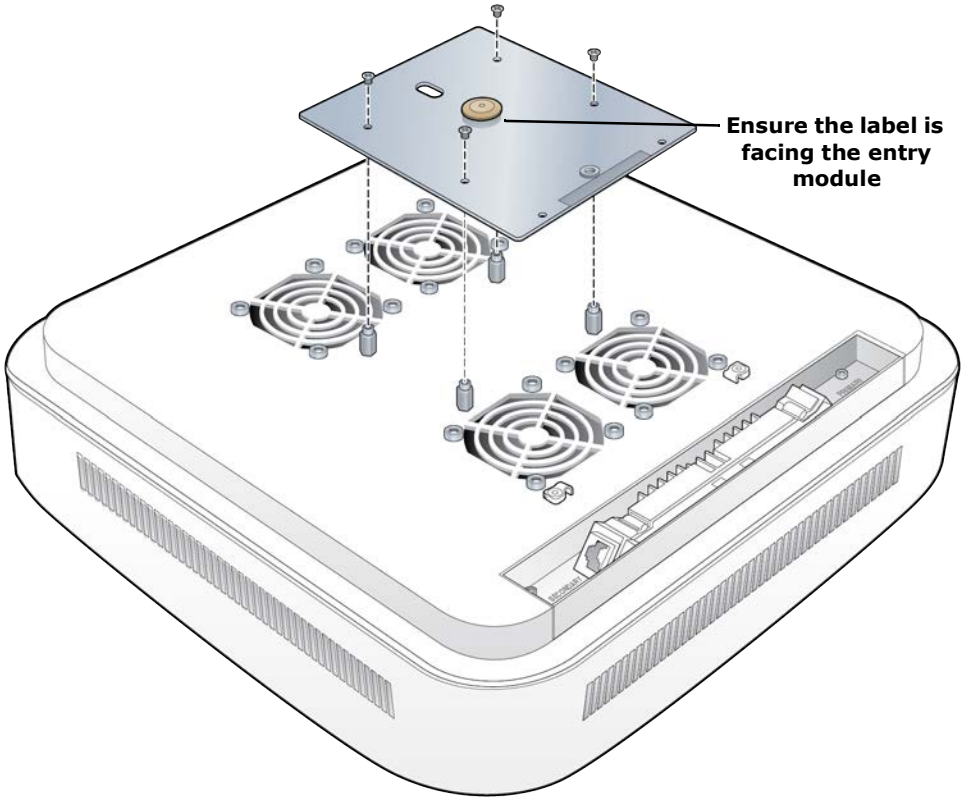
Ensure the label is facing the entry module

6 Connect the Red Primary and Blue Secondary Ethernet cables to the RP corresponding ports, as shown below.

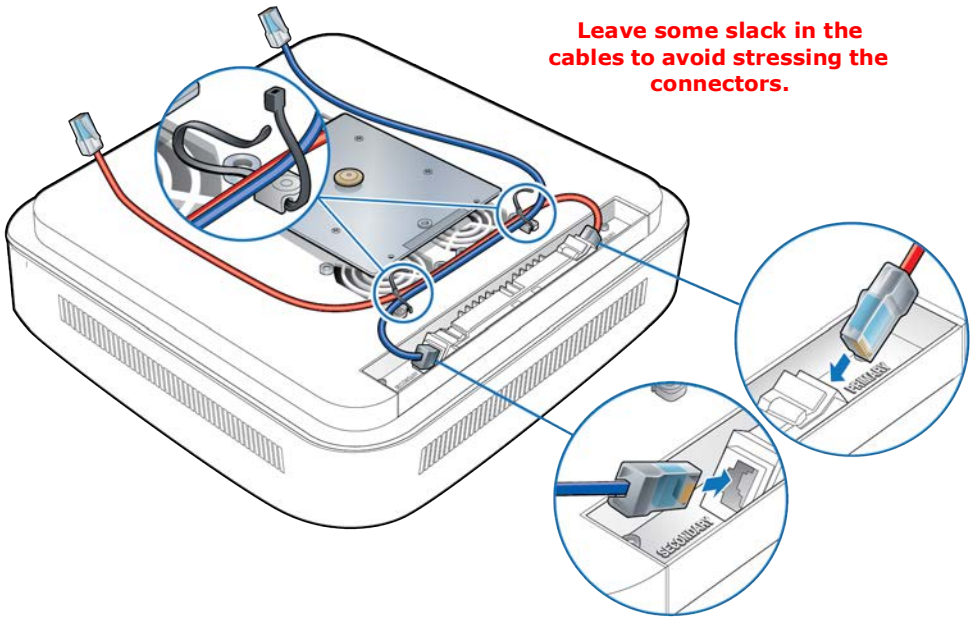

7 Lift the RP near the wall plate and attach the Red and Blue cables to the corresponding Red and Blue ports.

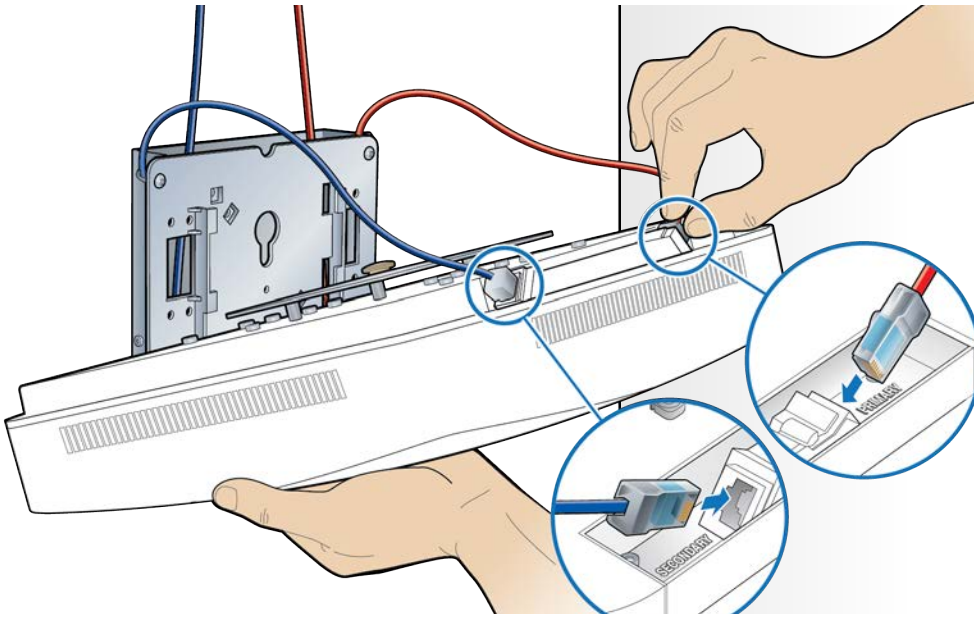

8 Attach the RP to the mounting plate.

a Align the keyhole opening on the mounting plate with the button on the RP mounting plate.

b Insert the RP into the mounting plate slot and slide until the RP plate meets the tabs on the octagon box plate.

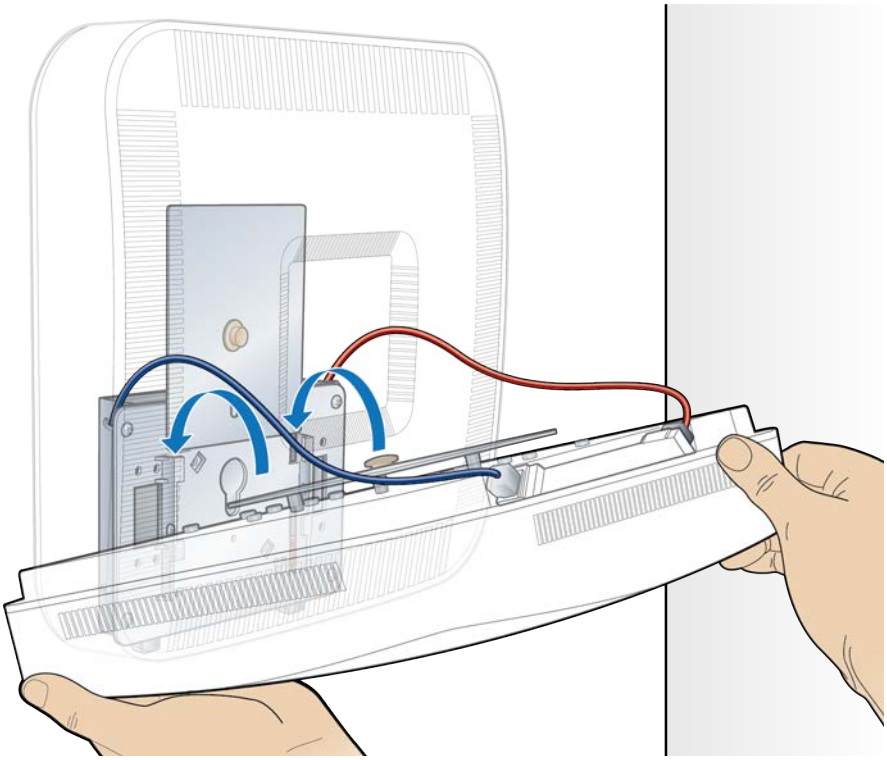

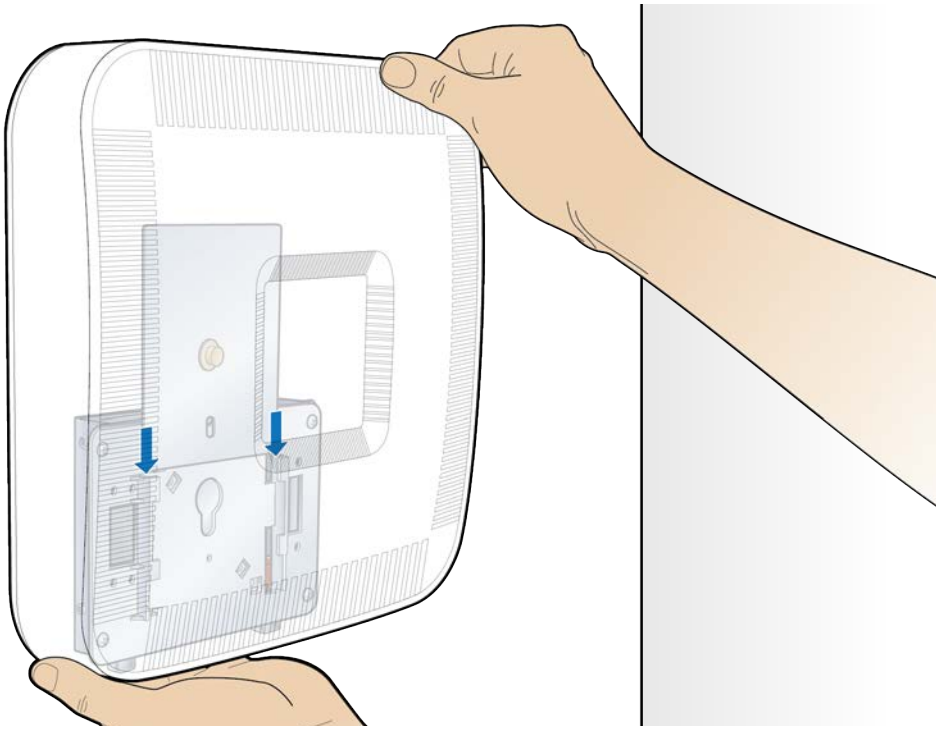
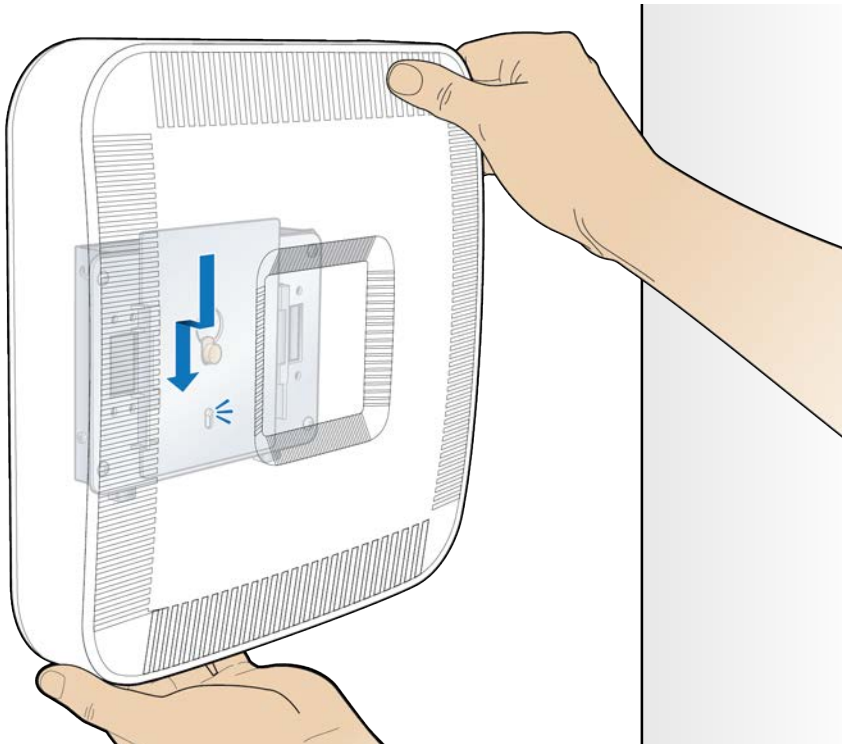
9 Gently slide the RP downward ad lock it into place.