10 Verify the RP5200i installation. The operational state of the RP can be determined by the LED status on the RP. Additional information can be attained from the WebGUI status screens. See Post-Install Verification

Flown mount

1 Remove the RP. Pull downward gently and push in the direction of the LEDs.

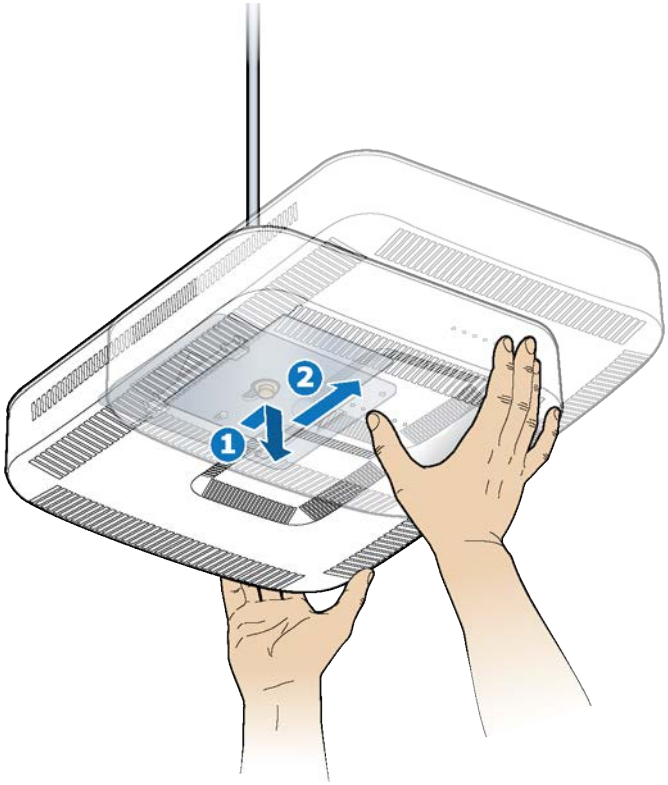

2 Disconnect the Red and Blue cables from the RJ45 jacks.

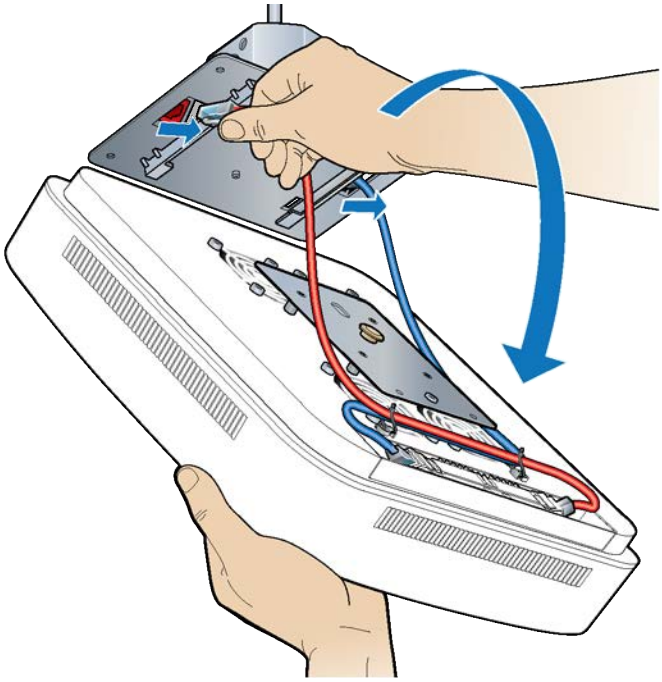

3 Remove the RP plate from the failed RP. Set the RP, plate and screws aside.

4 Attach the RP plate to the replacement RP.

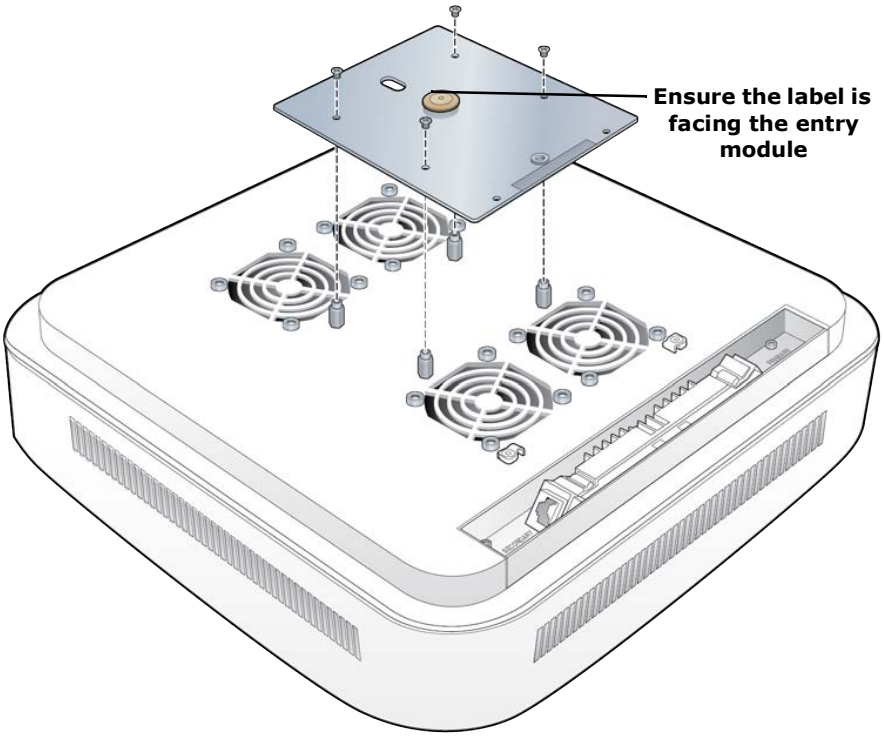

5 Connect the Red Primary and Blue Secondary Ethernet cables to the RP corresponding ports, as shown below.

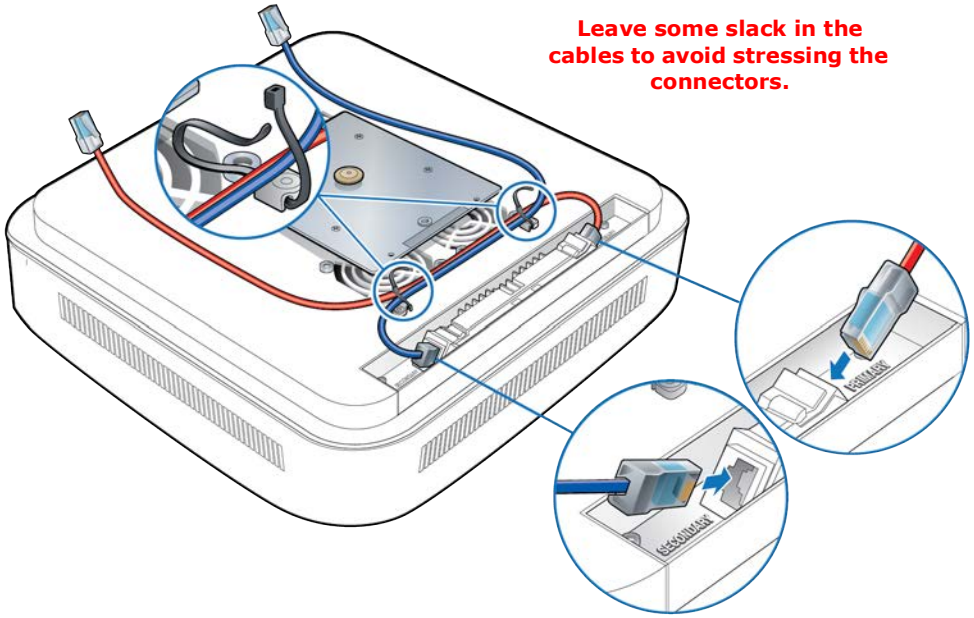

6 Lift the RP and insert the Red and Blue RP cables into the Red and Blue RJ45 jacks, respectively.

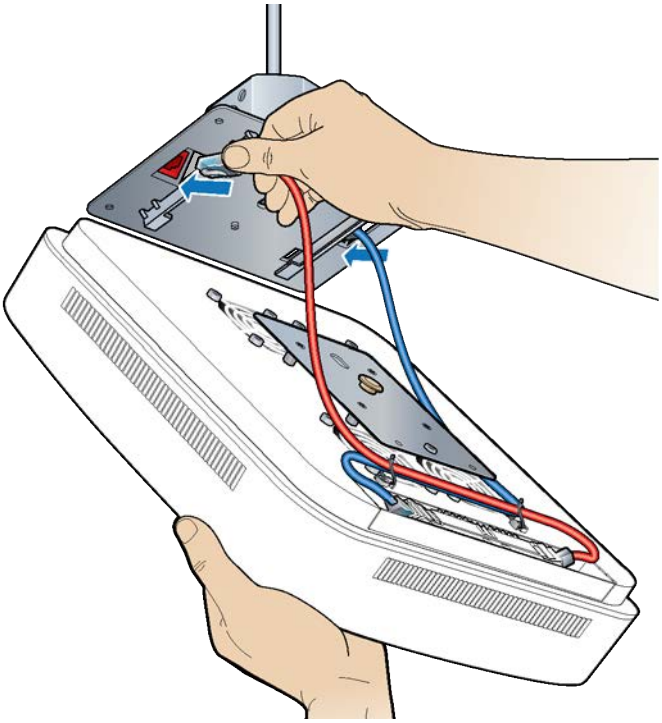

7 Attach the RP to the mounting plate.

- **a** Align the keyhole opening on the mounting plate with the button on the RP mounting plate.
- **b** Insert the RP into the mounting plate slot and slide until the RP plate meets the tabs on the octagon box plate.

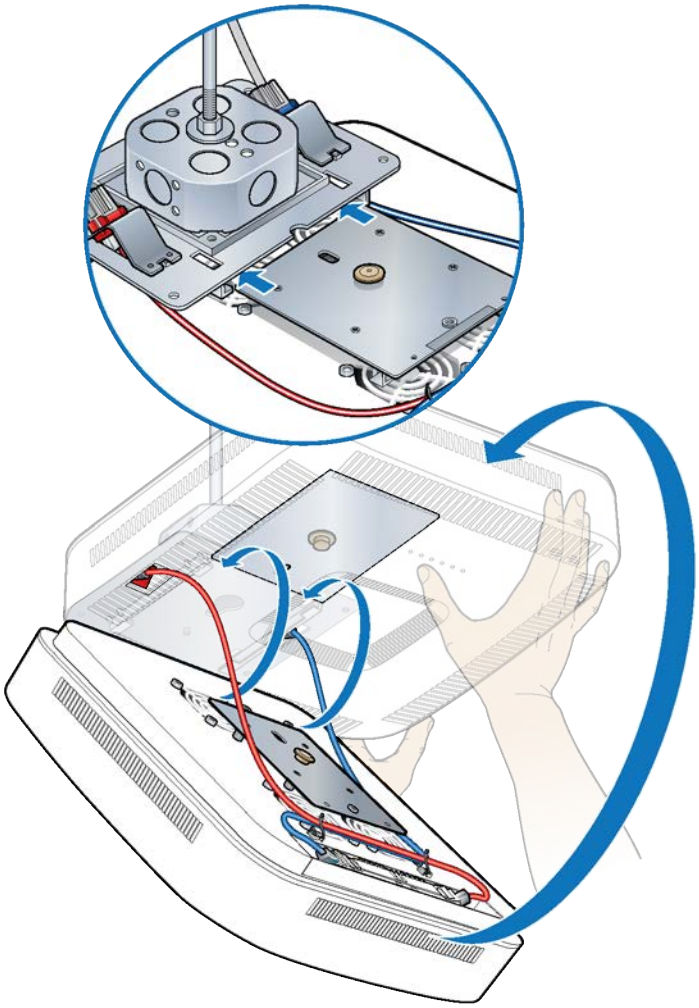

8 Lift the RP vertically and slide it into the locked position.

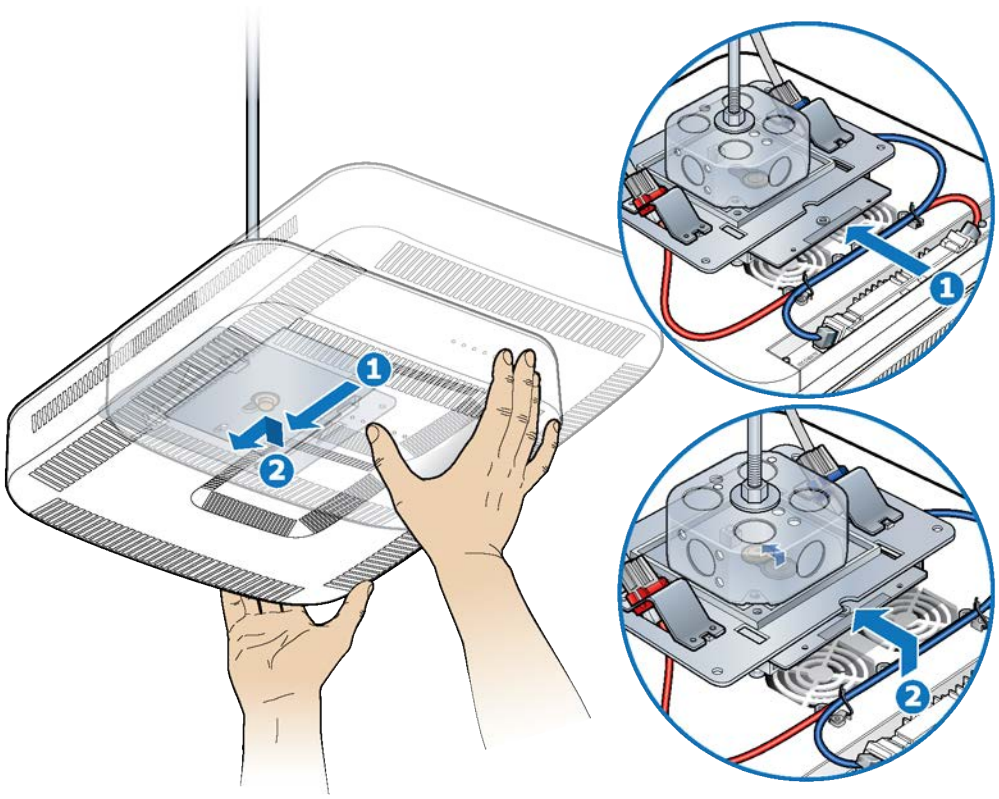

Verify the RF module installation. The operational state of the RF module can be determined by the LED status on the RP. Additional information can be attained from the WebGUI status screens. See Post-Install Verification.

Pole mount

1 Gentlypull the RP forward and slide it upward.

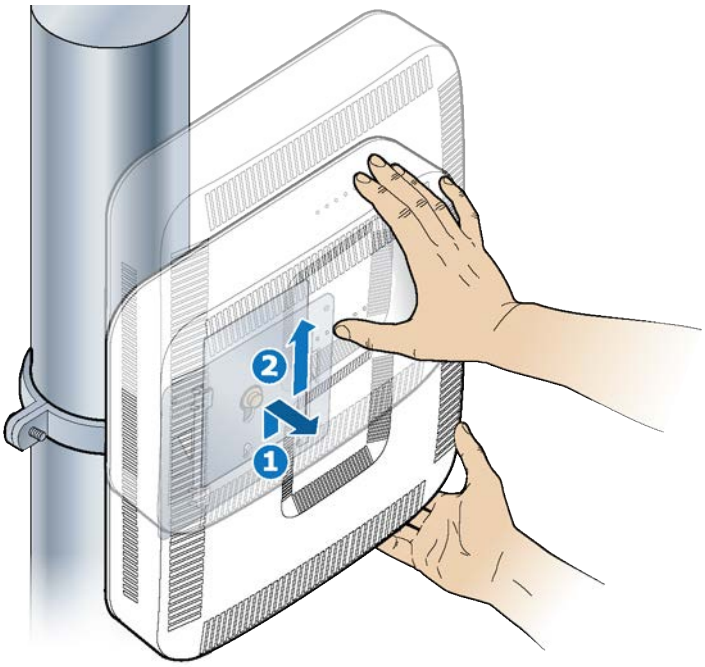

2 Tilt the RP forward and disconnect the cables from the RJ45 jacks. Set the RP aside.

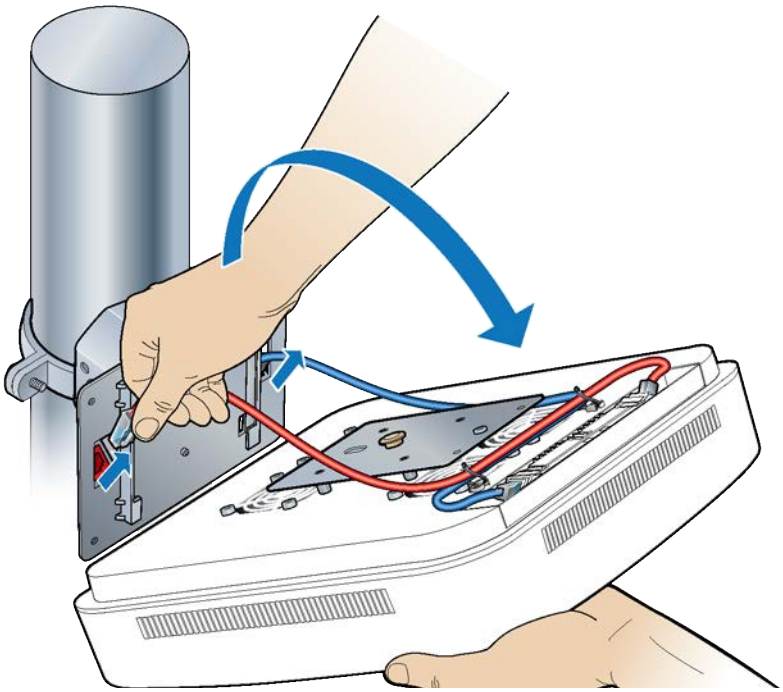

3 Attach the plate to the RP.

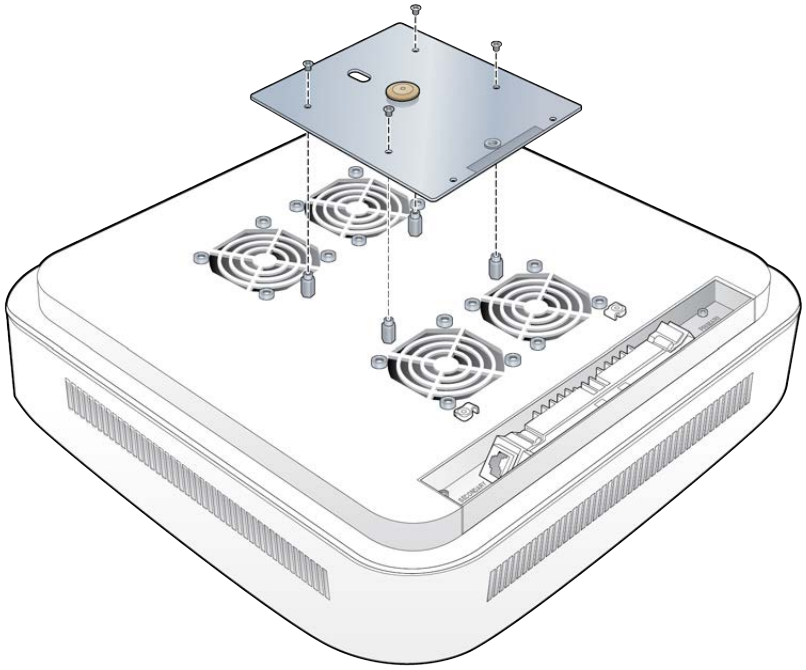

4 Connect the Red Primary and Blue Secondary cables to the corresponding ports on the RP.

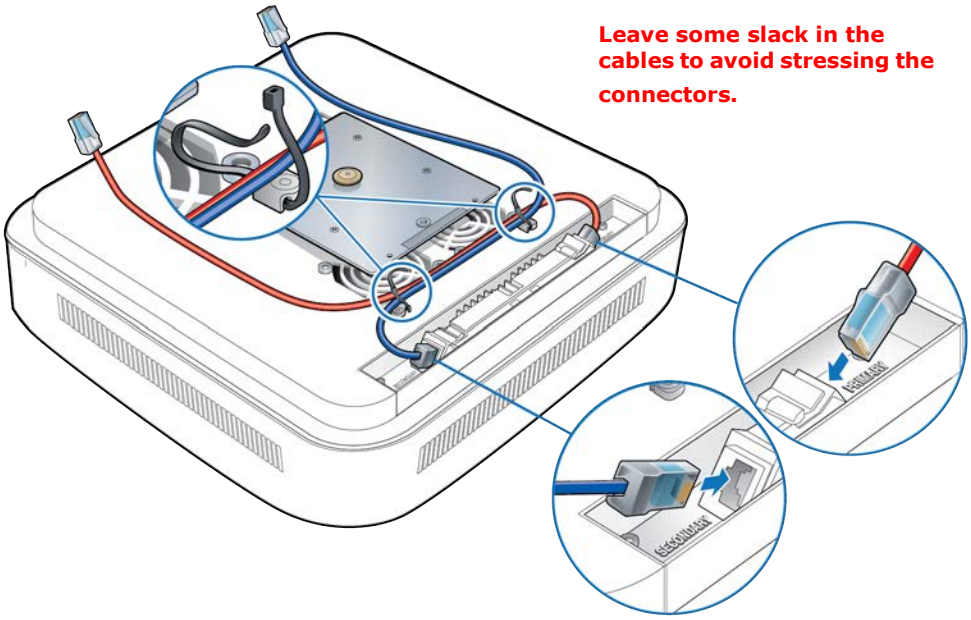

5 Lift the RP to the pole plate and connect the Red Primary and Blue Secondary cables to the corresponding connectors on the plate.

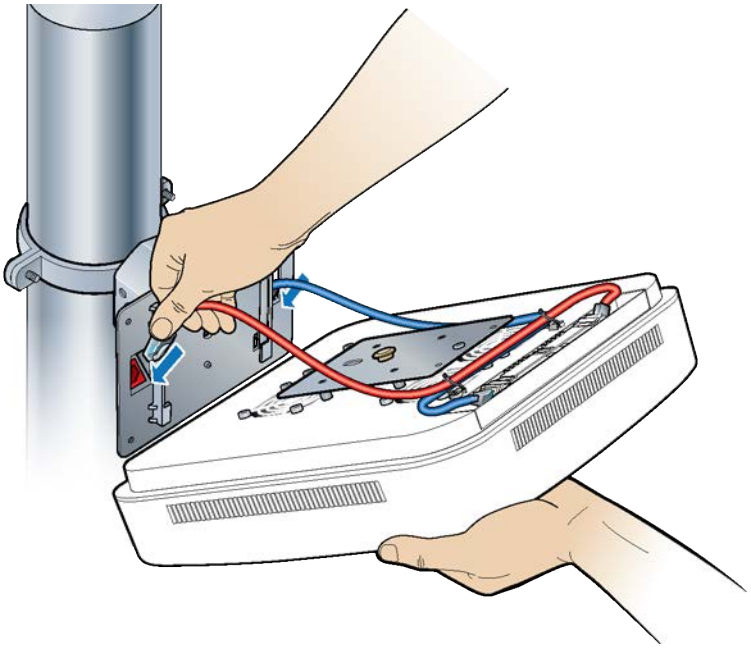

6 Lift the RP and gently slide it onto the pole mounting plate.

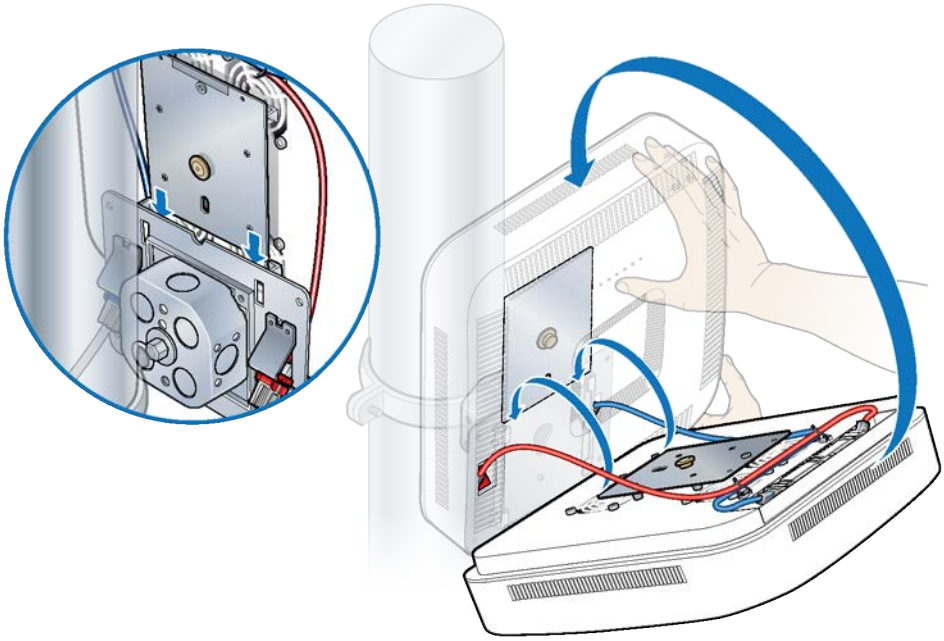

7 Slide the RP down and lock into place.

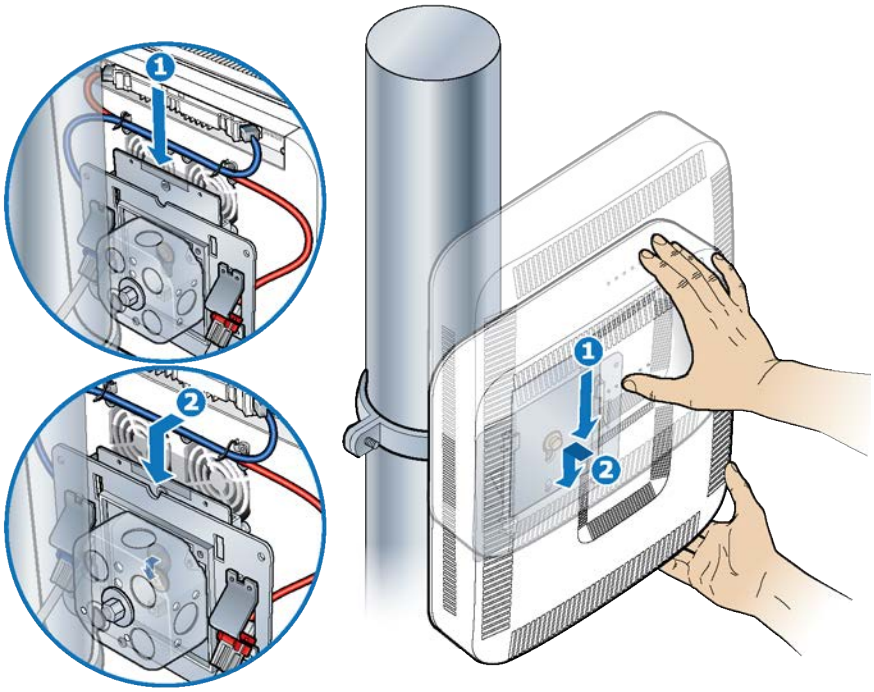

Verify the RF module installation. The operational state of the RF module can be determined by the LED status on the RP. Additional information can be attained from the WebGUI status screens. See Post-Install Verification.

Replacing RP5100 series Radio Points

The following procedures provide instructions for replacing a ONECELL Radio Point (RP) module in a live network environment.

- Replacing a ceiling RP5100i (above tile)
- Replacing a flown mounted RP5100i
- Replacing a pole mounted RP5100i
- RP post-replacement verification

Replacing a ceiling RP5100i (above tile)

1 Remove the ceiling tile next to the mounted RP to allow access to the mounting hardware and Ethernet cable.

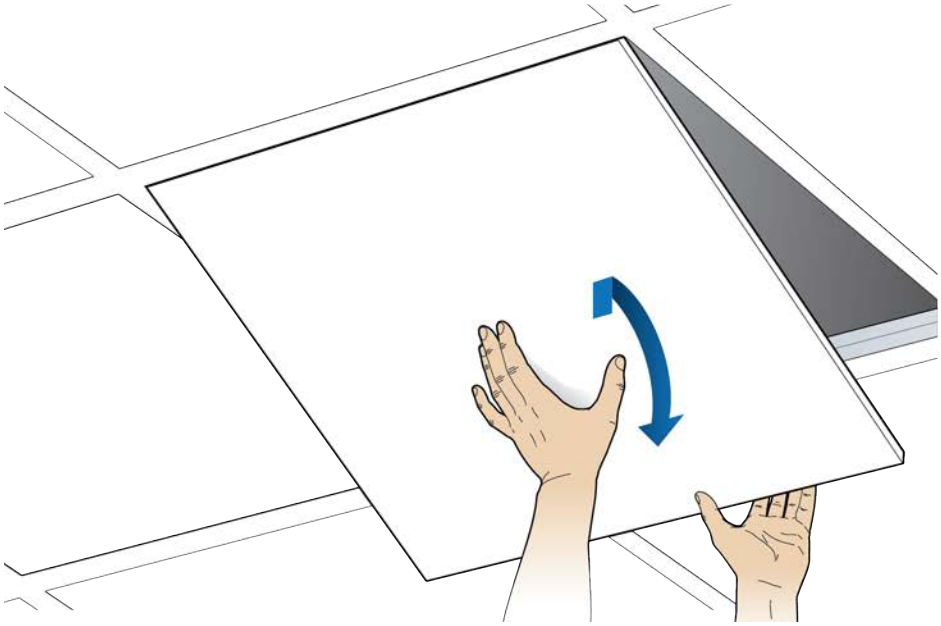

2 Remove the RP cover.

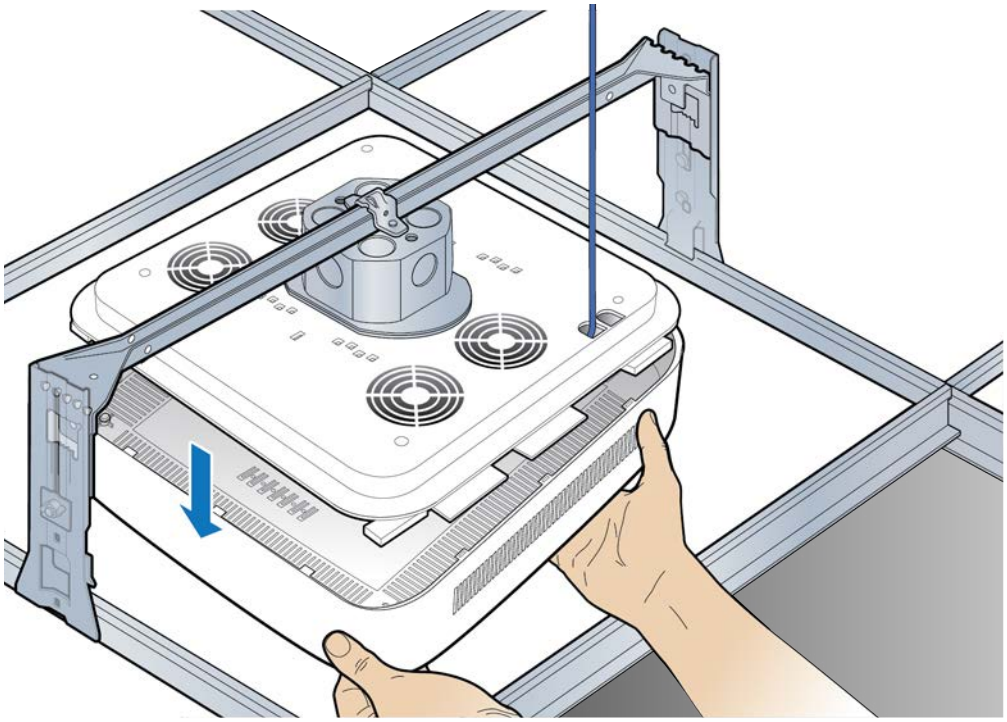

3 Disconnect the Ethernet cable.

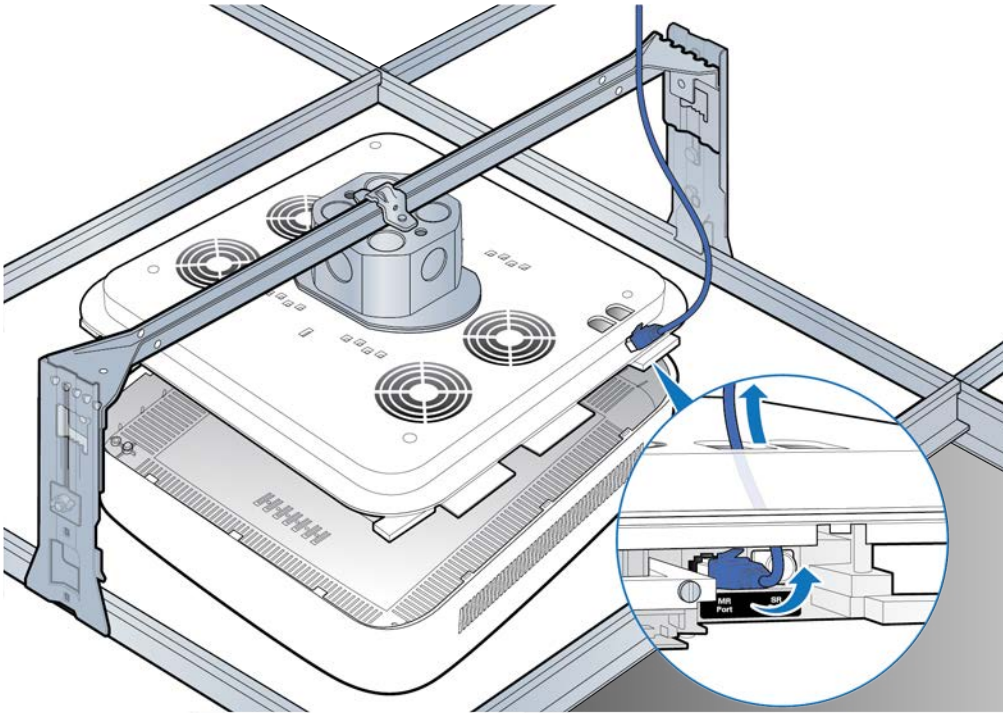

4 Replace the cover and twist the RP clockwise to remove it. Set the failed RP aside.

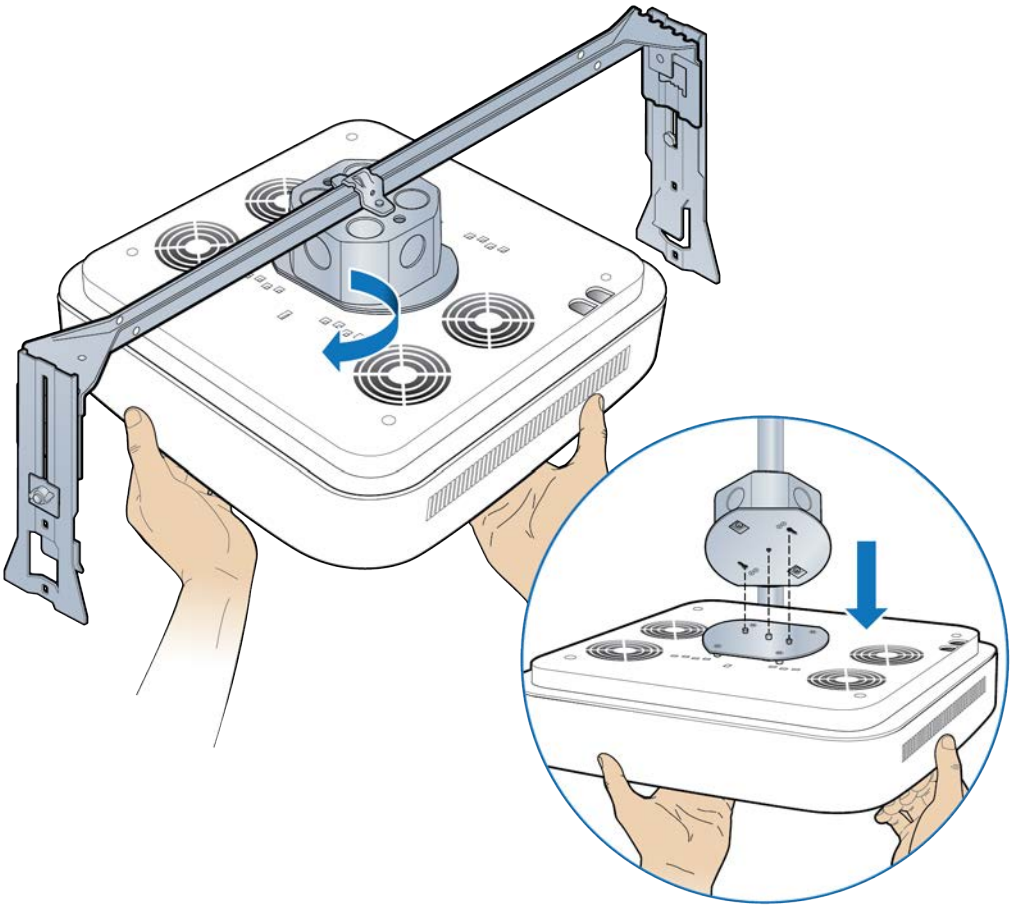

5 Attach the mounting plate to the replacement RP.

NOTE: Apply thread locking compound to the screws prior to installation.

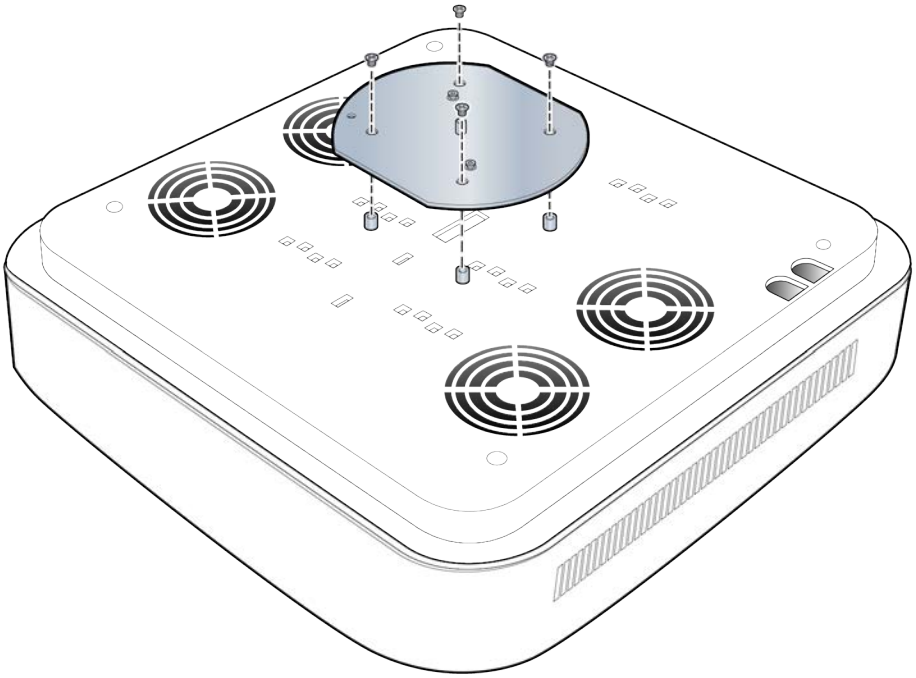

6 Attach the RP to the octagonal mounting plate and twist to engage.

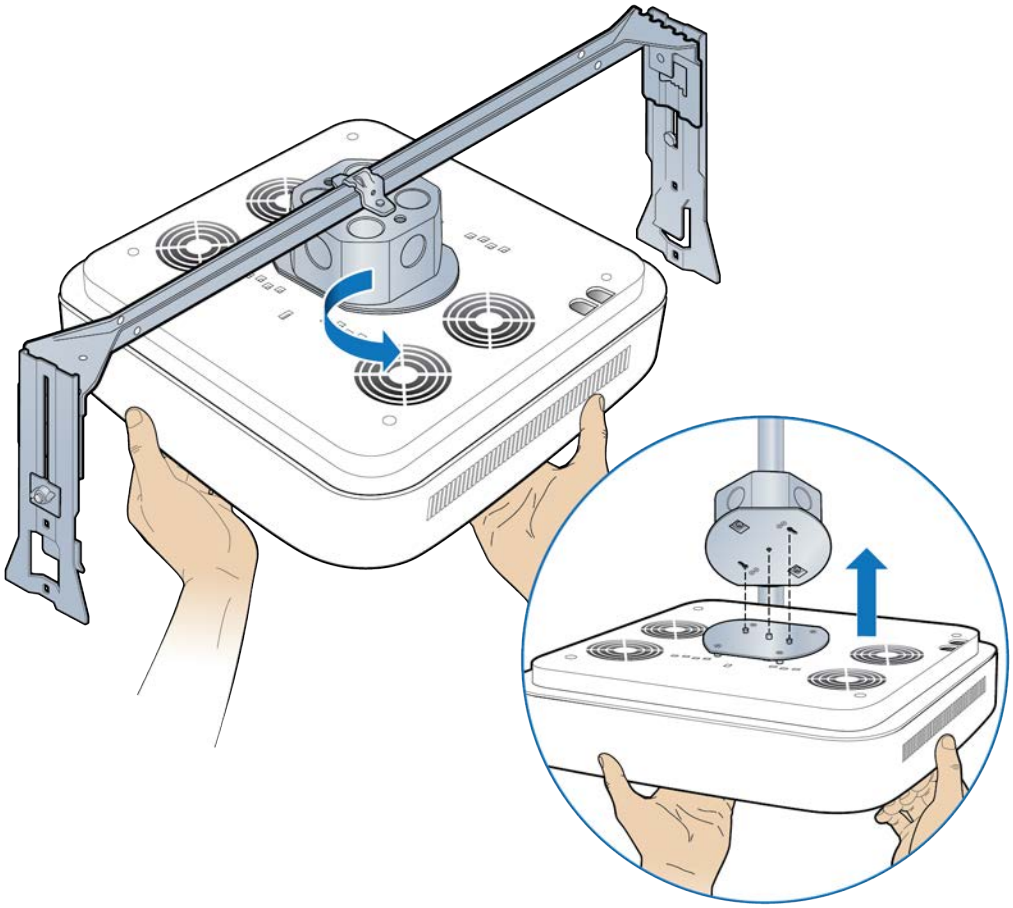

7 Remove the cover and connect the Ethernet cable to the MR port.

NOTE: The cover is attached to the RP with two lanyards.

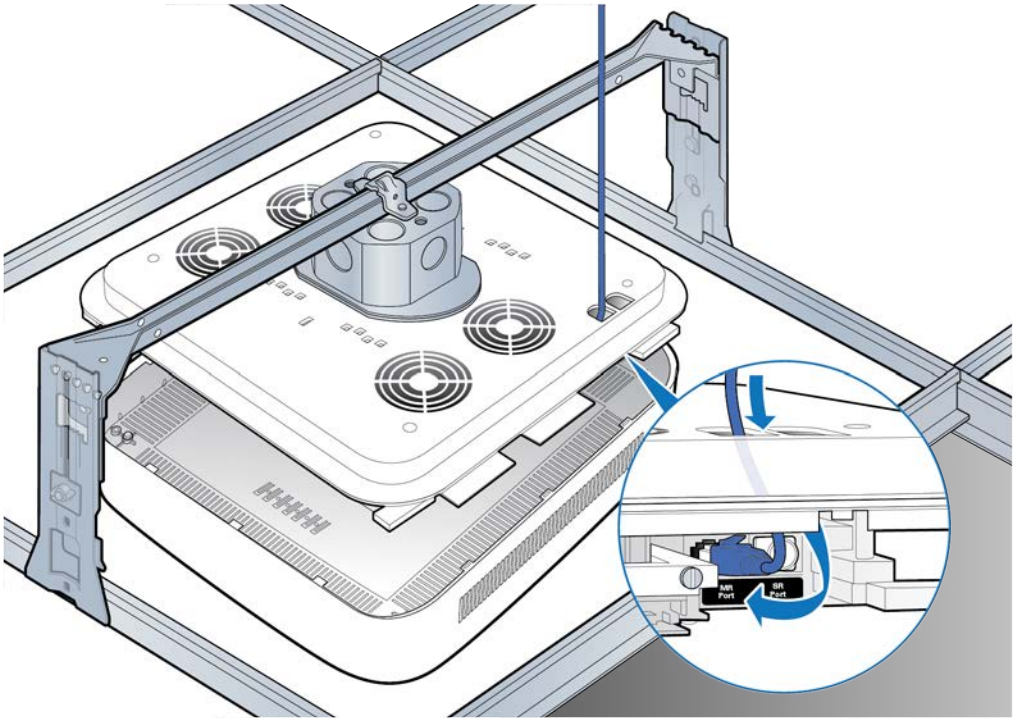

8 Attach the plastic cover to the RP.

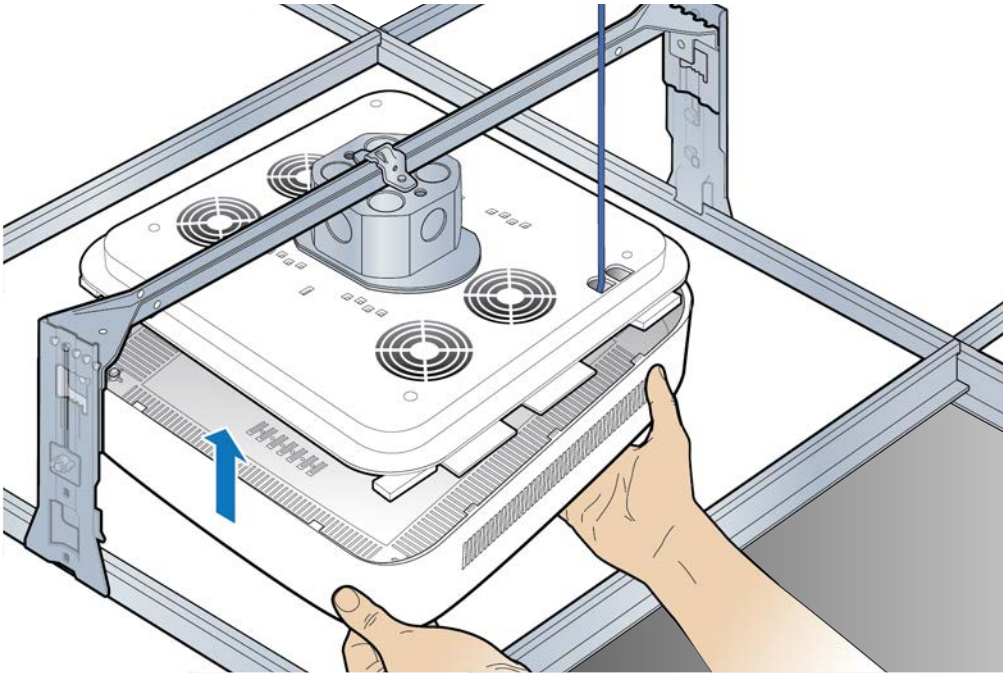

9 Replace the ceiling tile.

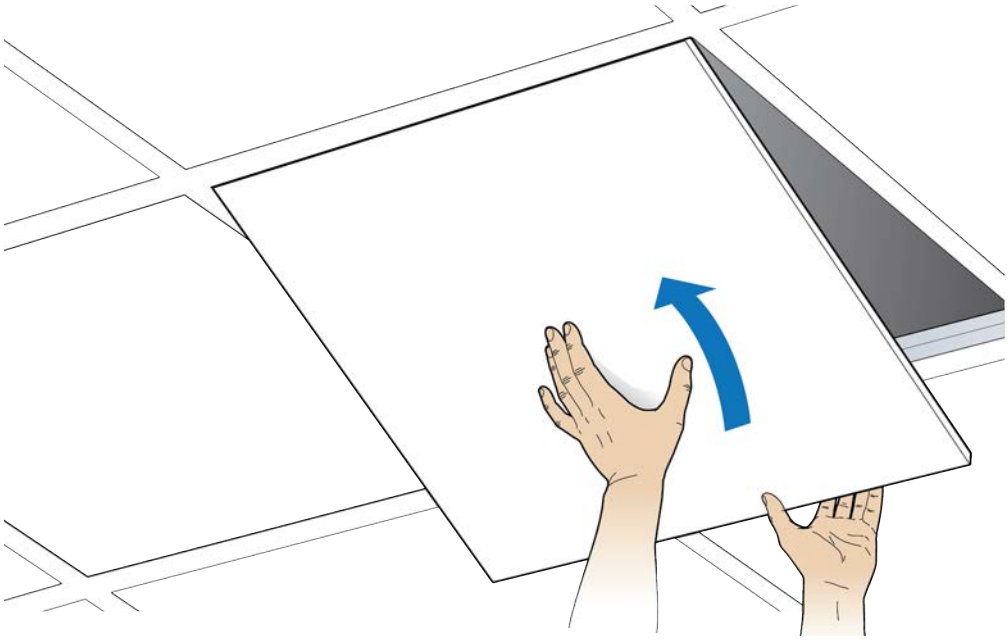

10 Verify the RP installation. See The operational state of the RP can be determined by the LED status on the RP. Additional information can be attained from the WebGUI status screens.

For verification procedures, see RP post-replacement verification.

Replacing a ceiling Indoor RP (on tile)

1 Remove the RP cover.

NOTE: The cover is attached to the RP with two lanyards.

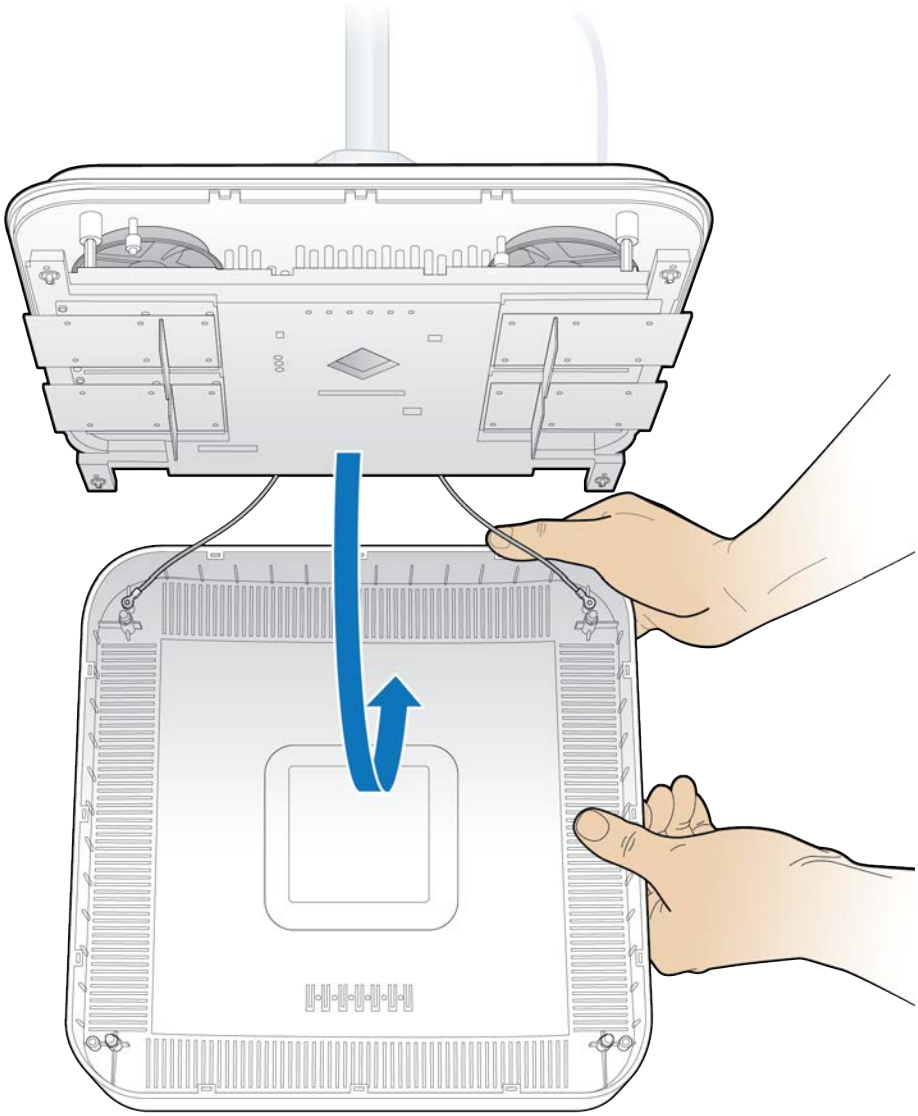

2 Disconnect the Ethernet cable from the RP.

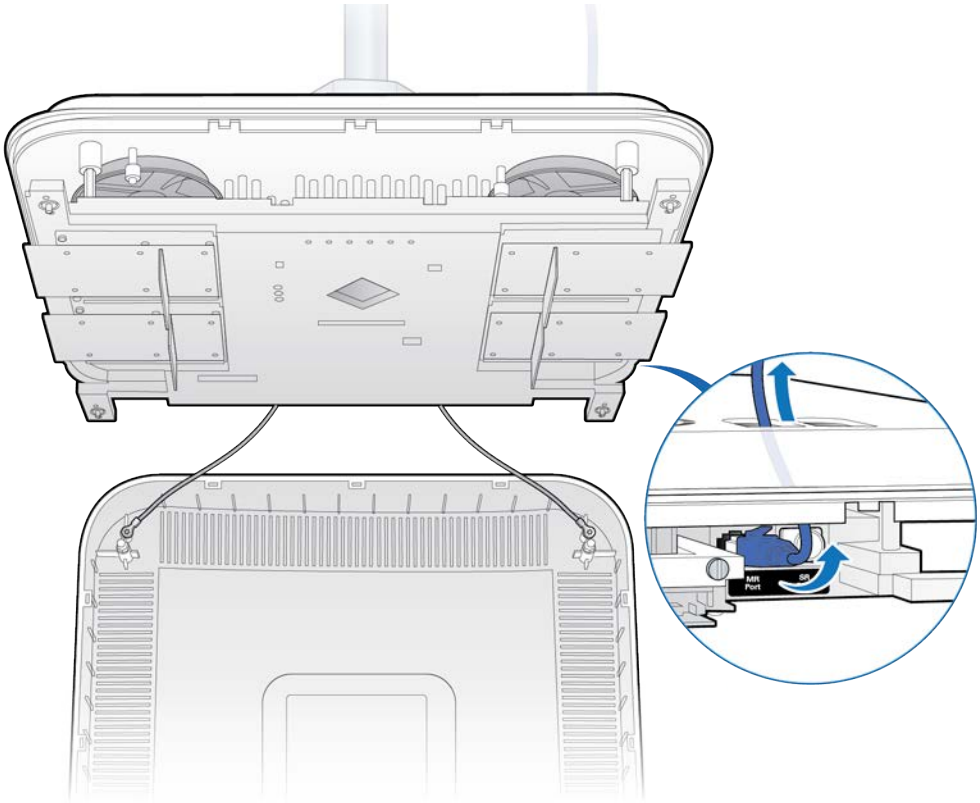

3 Replace the cover and twist the RP clockwise and remove the failed RP.

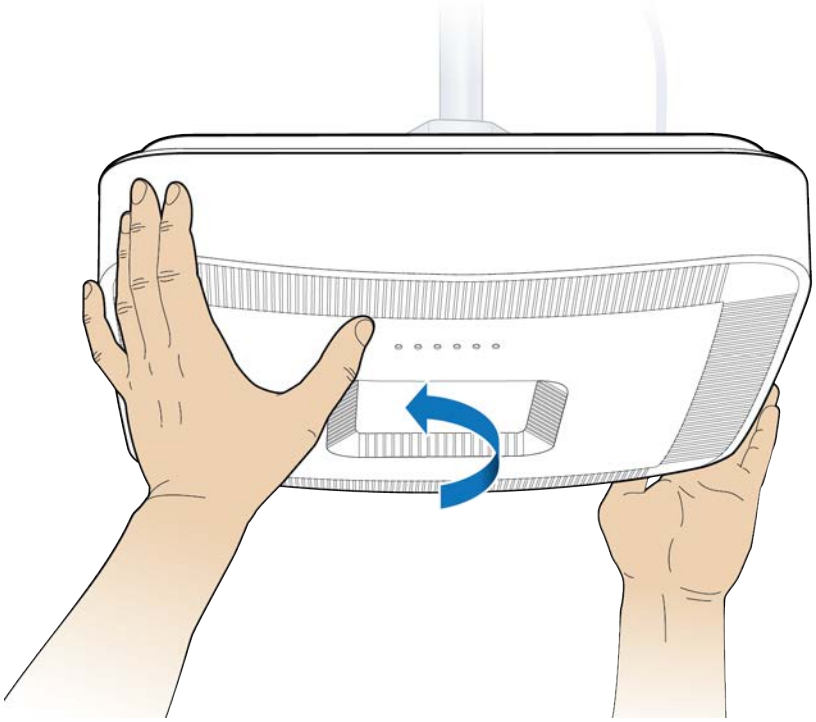

4 Attach the plate to the replacement RP.

NOTE: Apply thread locking compound to the screws prior to installation.

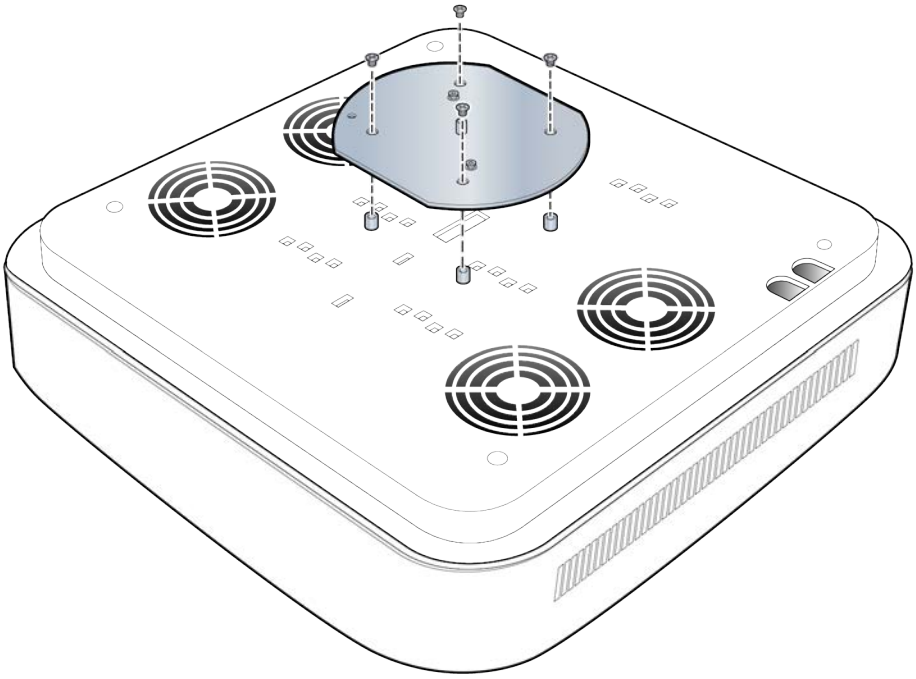

5 Attach the RP to the octagonal mounting plate.

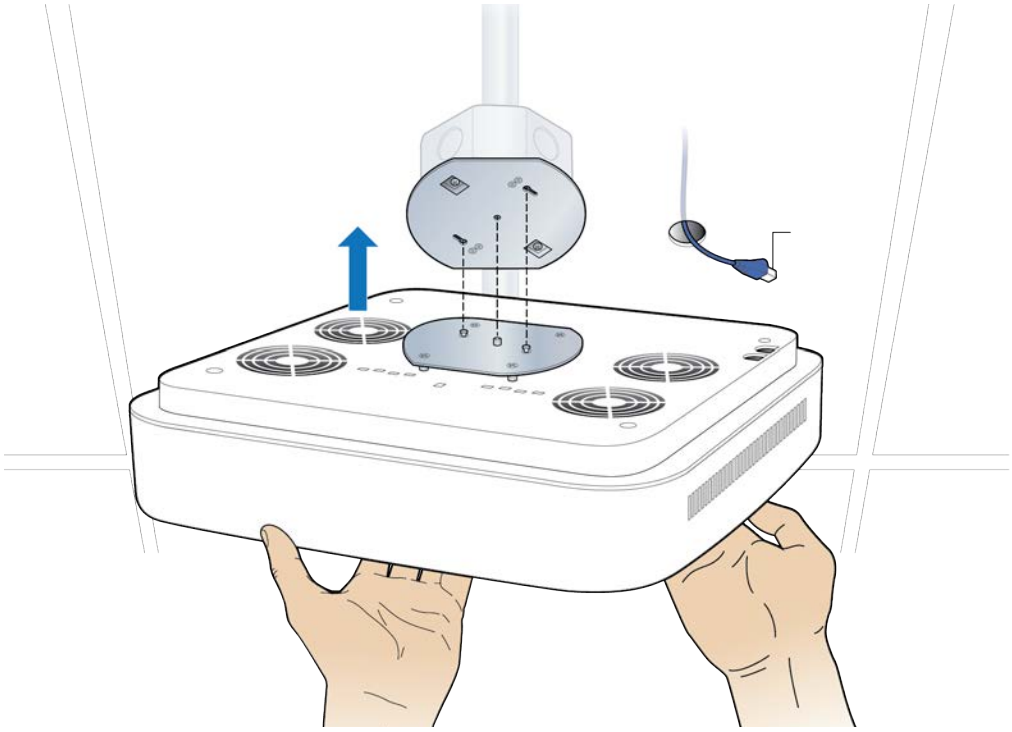

6 Secure the RP to the plate by twisting the RP counterclockwise.

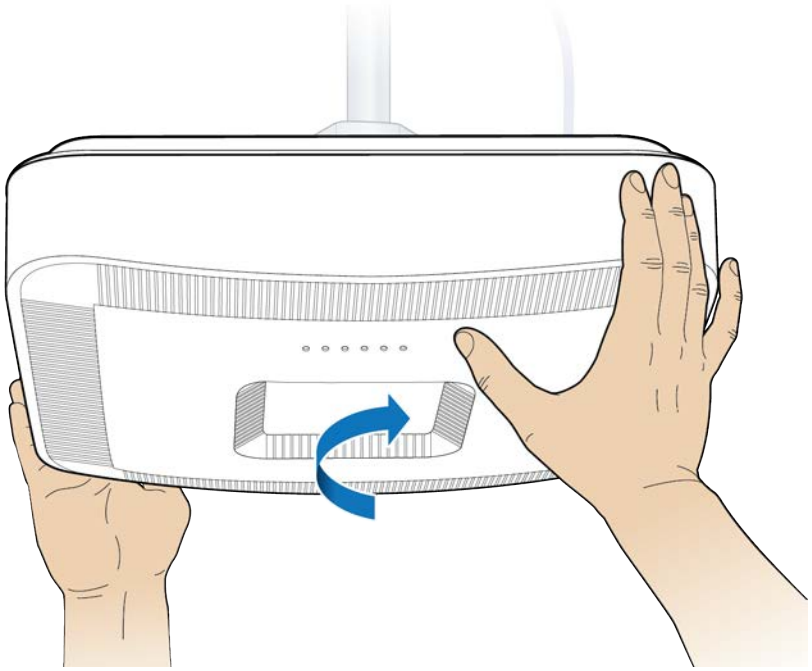

7 Remove the cover and connect the Ethernet cable to the MR port.

NOTE: The cover is attached to the RP with two lanyards.

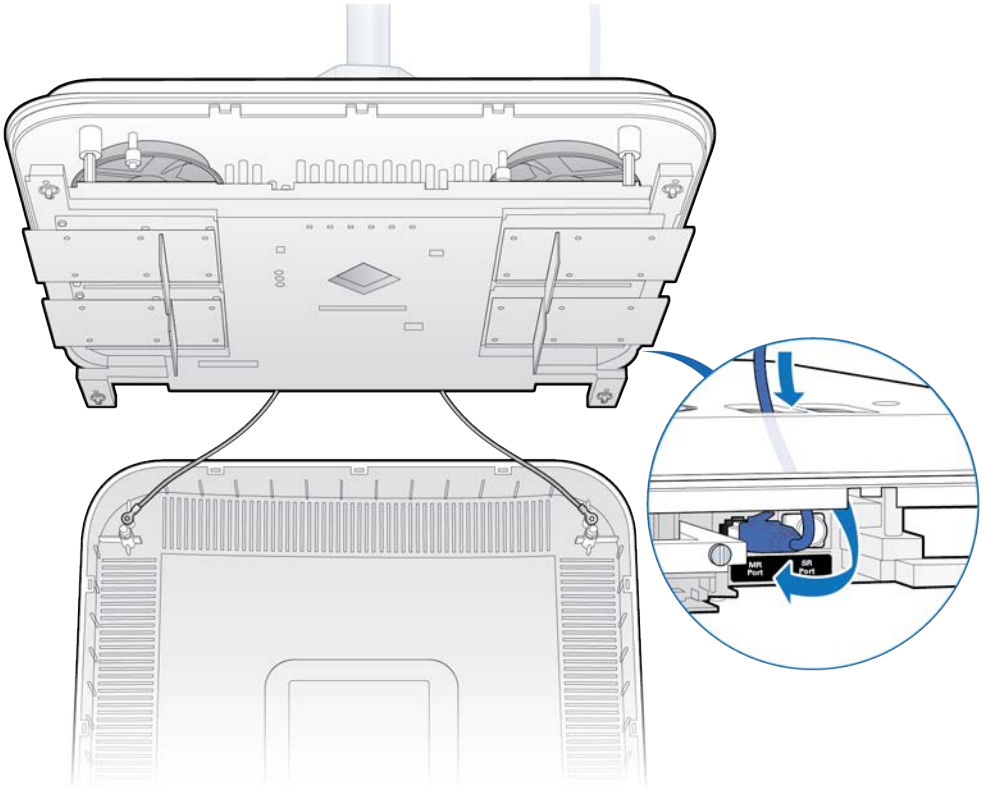

8 Attach the plastic cover to the Radio Point.

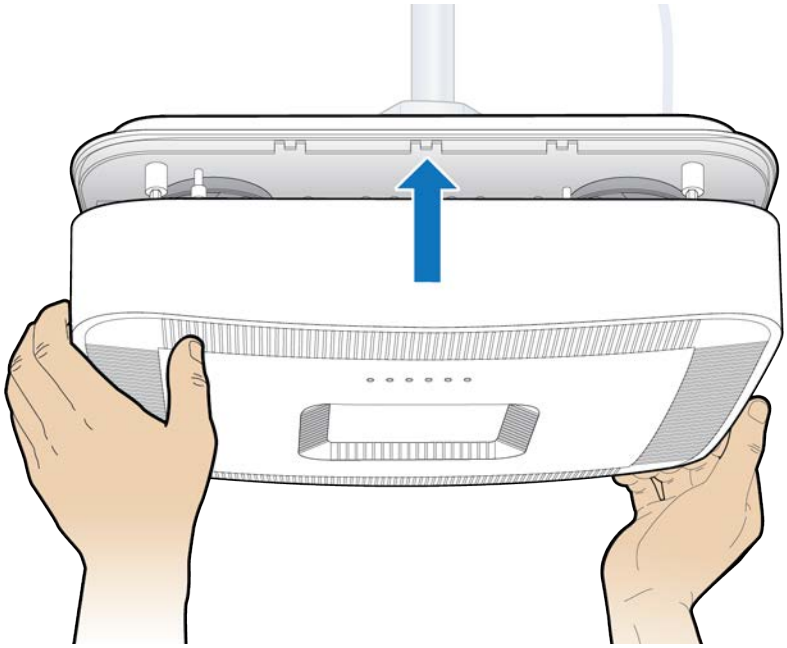

9 Verify the RP installation. See The operational state of the RP can be determined by the LED status on the RP. Additional information can be attained from the WebGUI status screens.

For verification procedures, see RP post-replacement verification.

Replacing a flown mounted RP5100i

1 Remove the RP cover.

NOTE: The cover is attached to the RP with two lanyards.

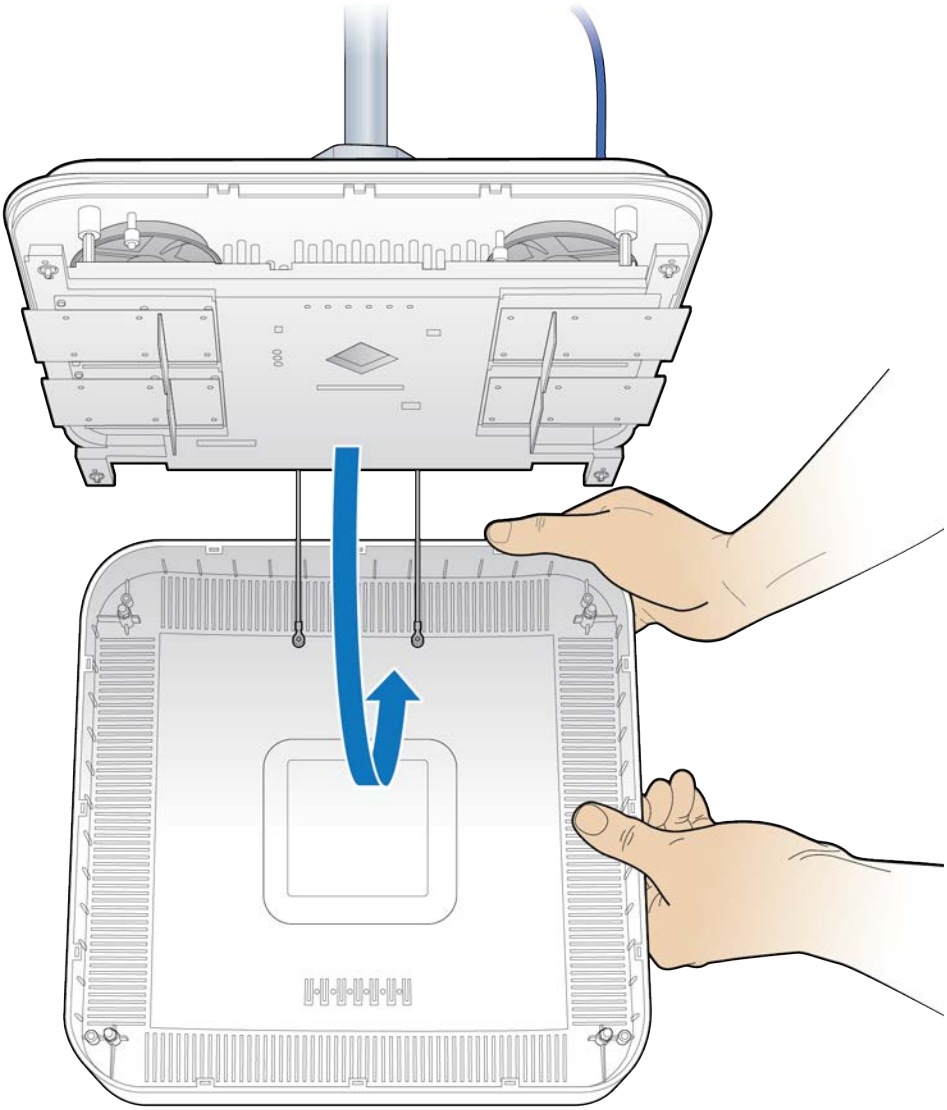

2 Disconnect the Ethernet cable.

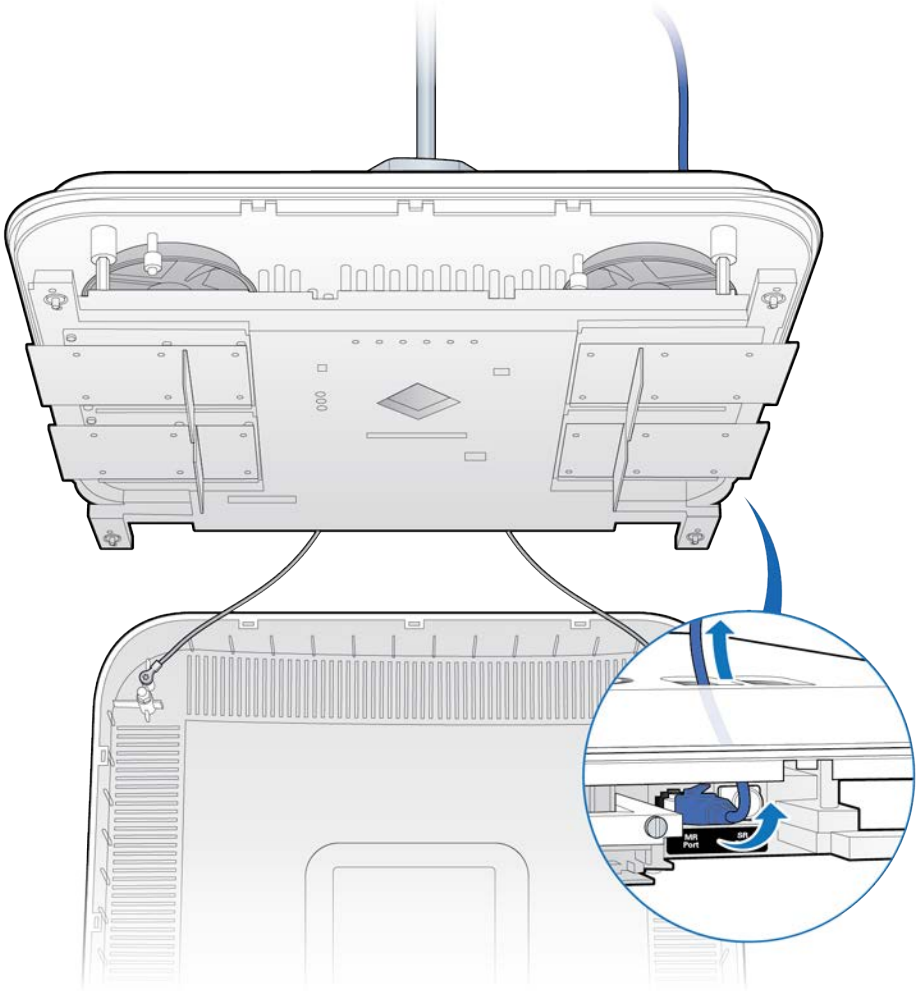

3 Replace the cover and twist the RP clockwise.

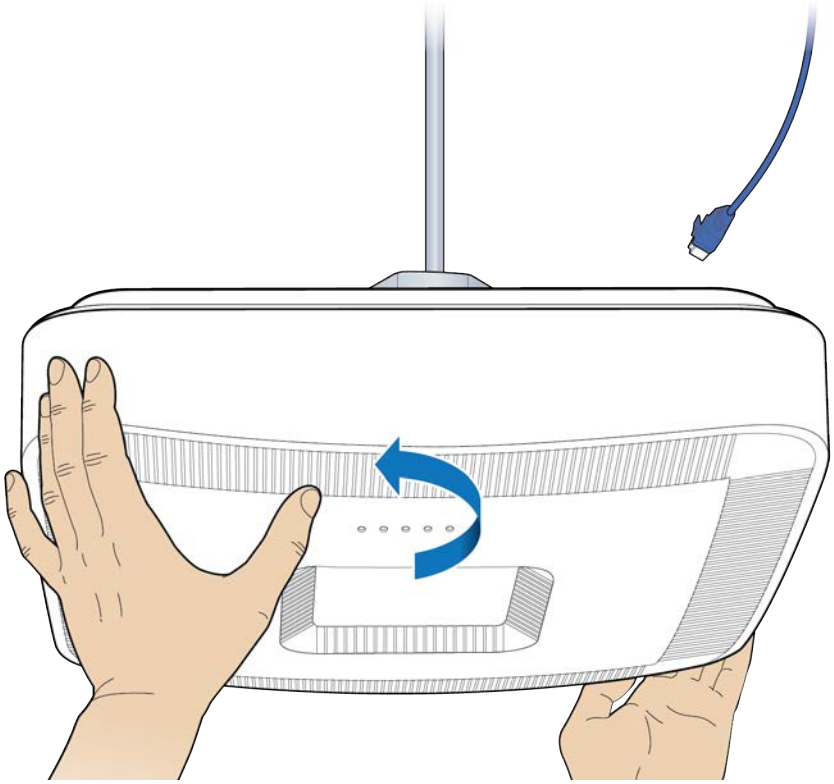

4 Remove the failed RP.

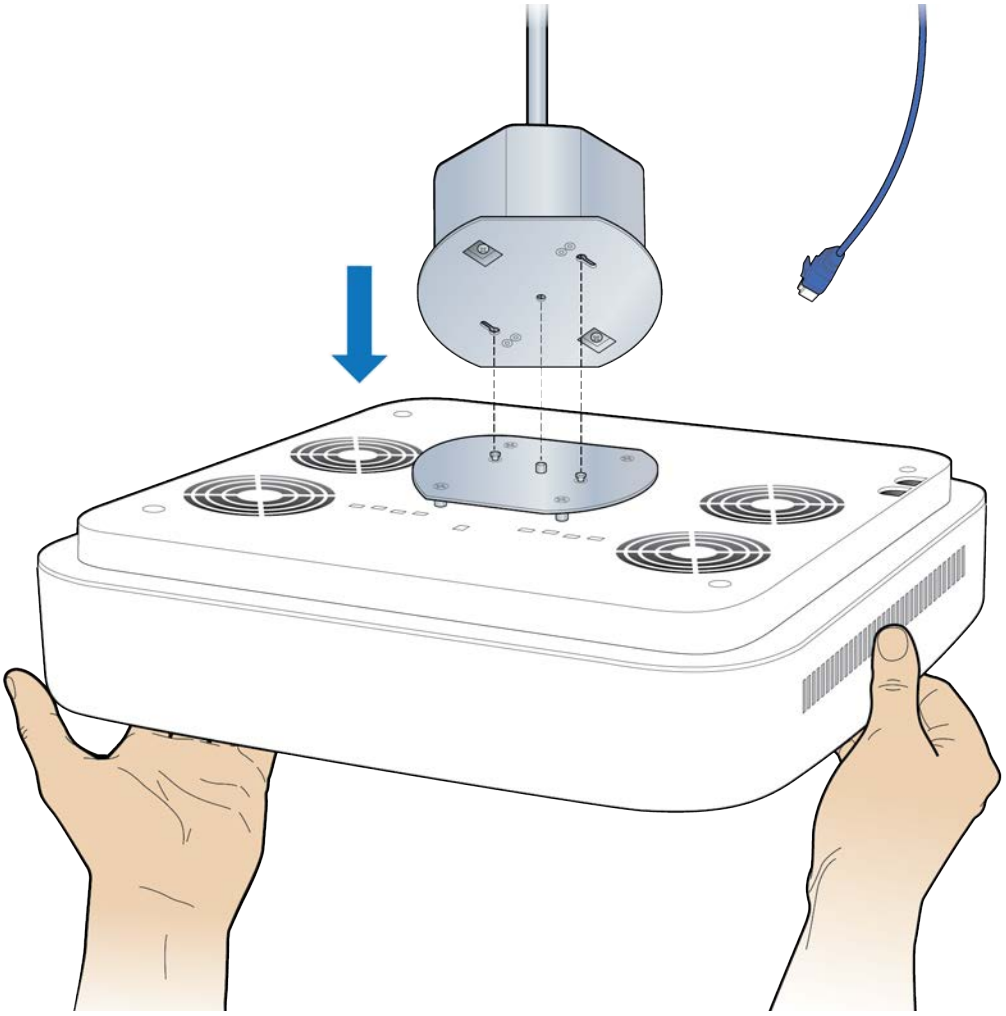

5 Attach the mounting plate to the RP.

NOTE: Apply thread locking compound to the screws prior to installation.

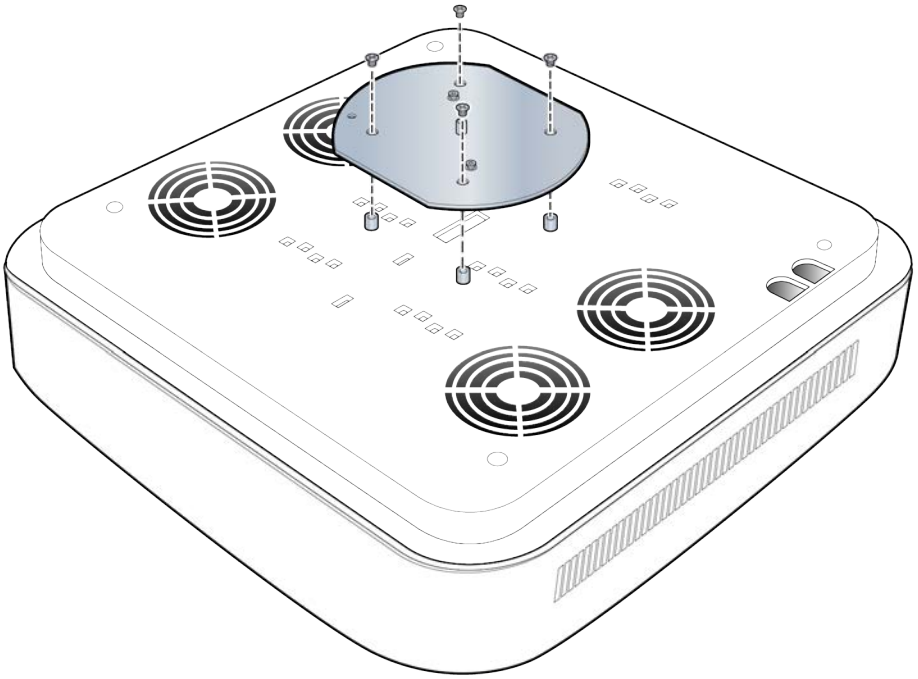

6 Attach the RP to the octagon box.

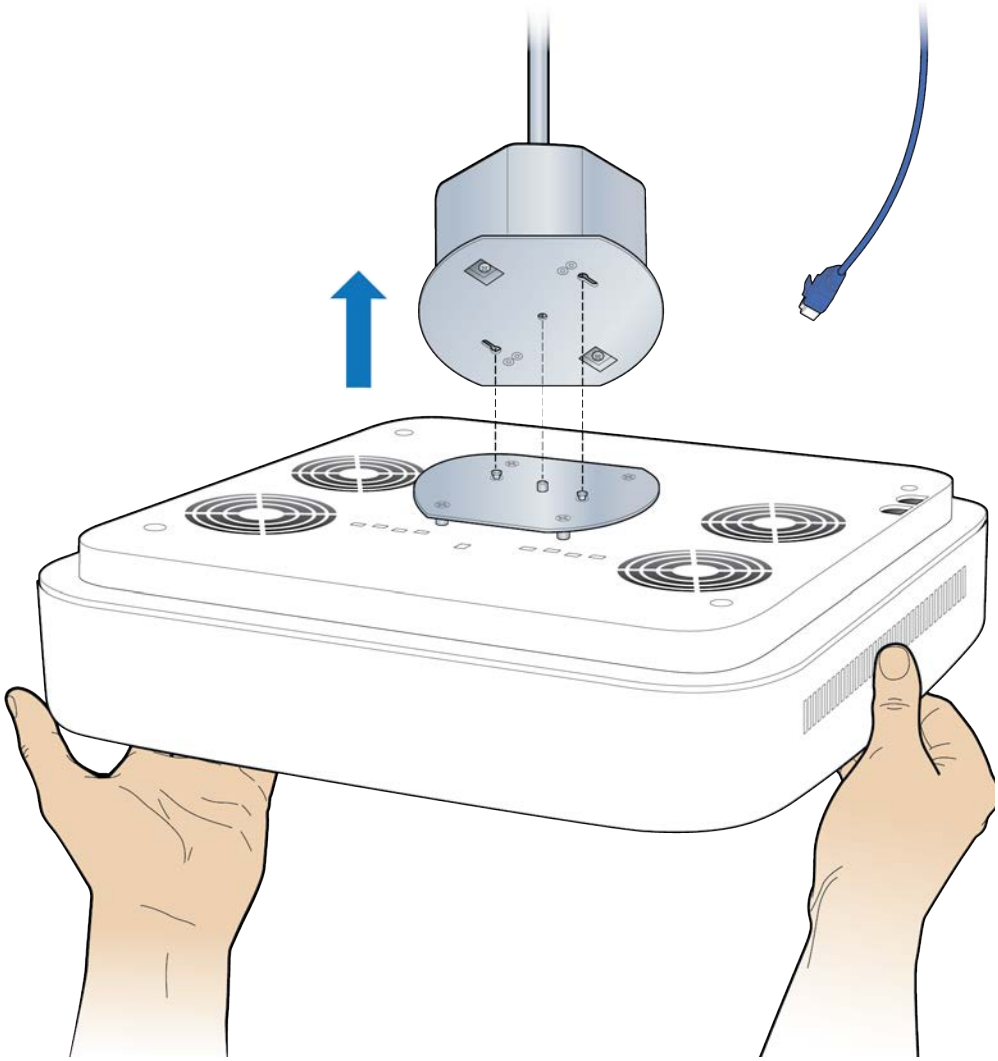

7 Twist the RP counterclockwise.

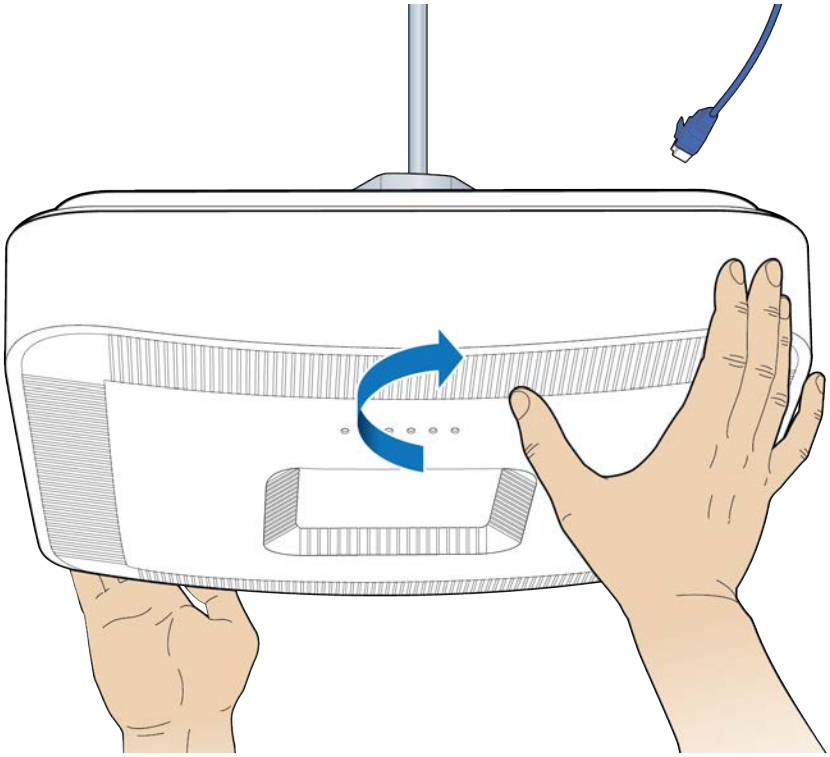

8 Remove the RP cover.

NOTE: The cover is attached to the RP with two lanyards.

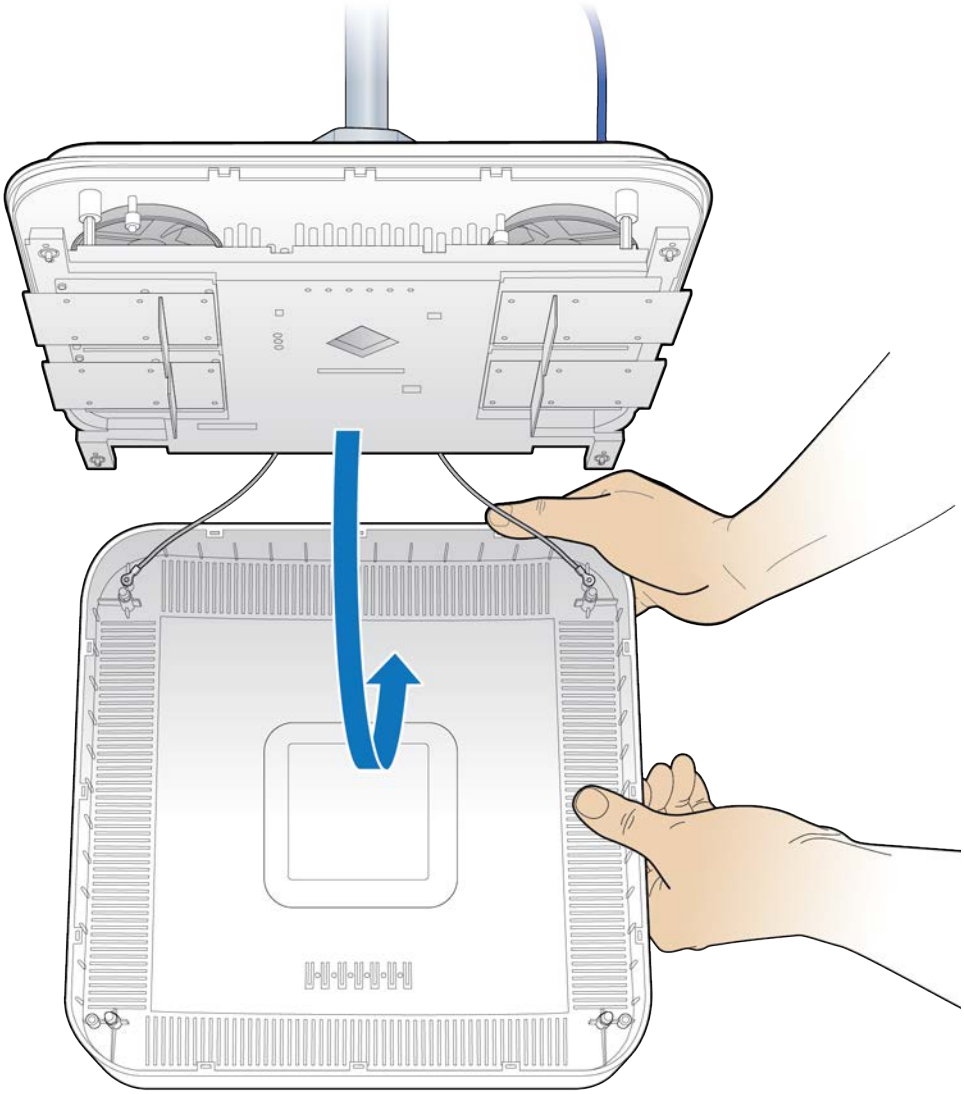

9 Connect the Ethernet cable to the MR port.

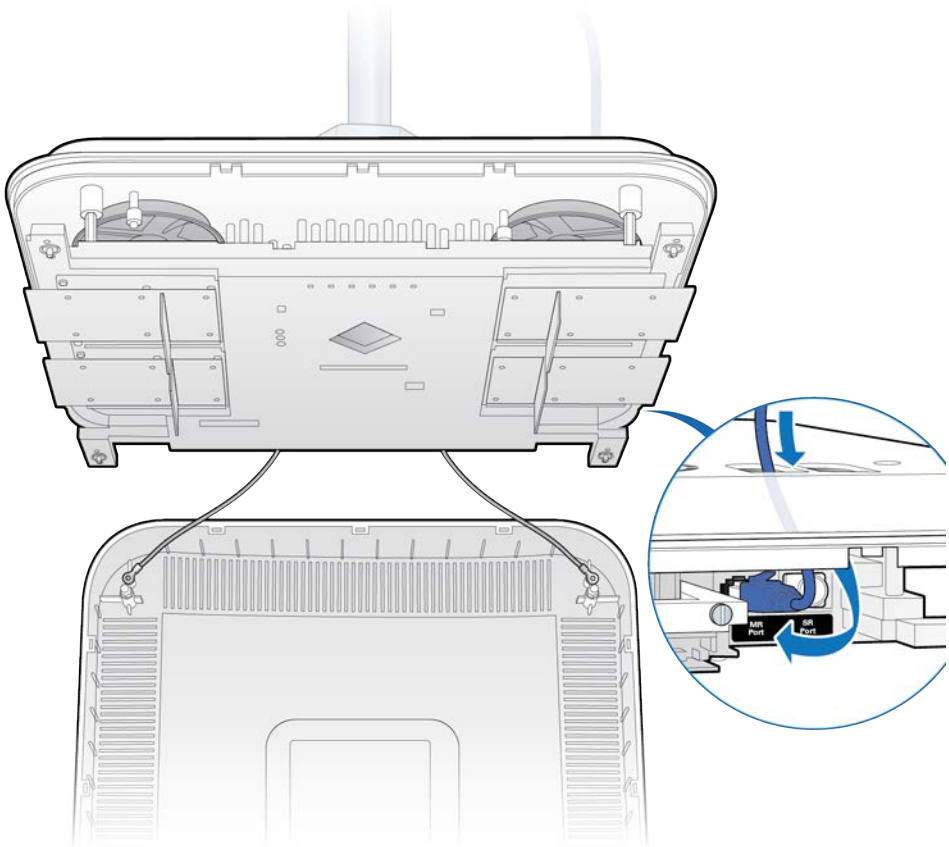

10 Replace the RP cover.

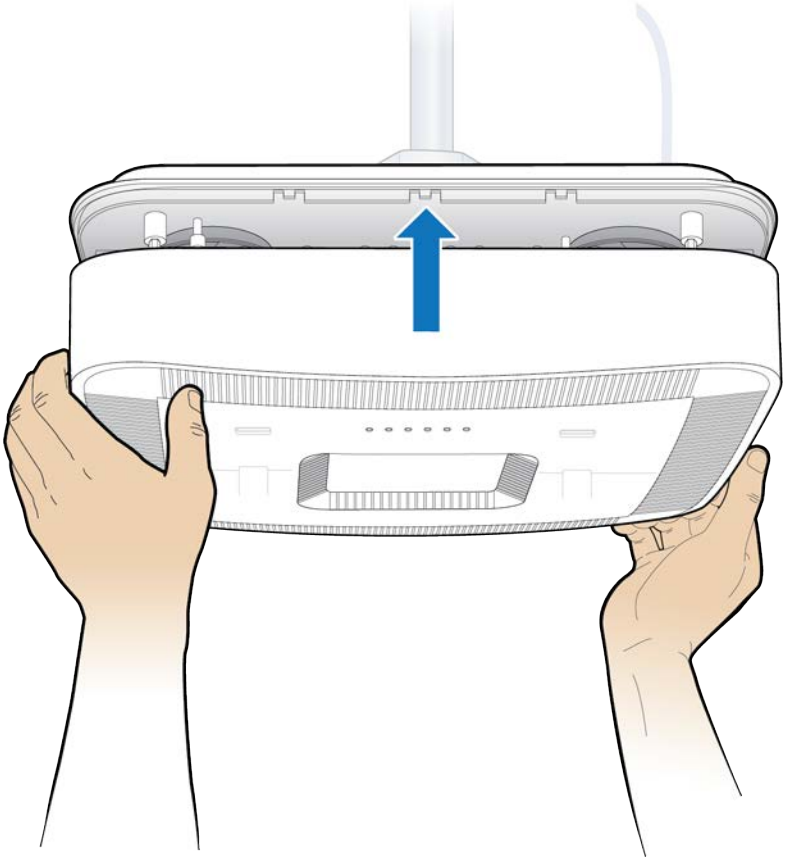

11 Verify the RP installation. See The operational state of the RP can be determined by the LED status on the RP. Additional information can be attained from the WebGUI status screens.

For verification procedures, see RP post-replacement verification.

Replacing a pole mounted RP5100i

1 Remove the RP cover.

NOTE: The cover is attached to the RP with two lanyards.

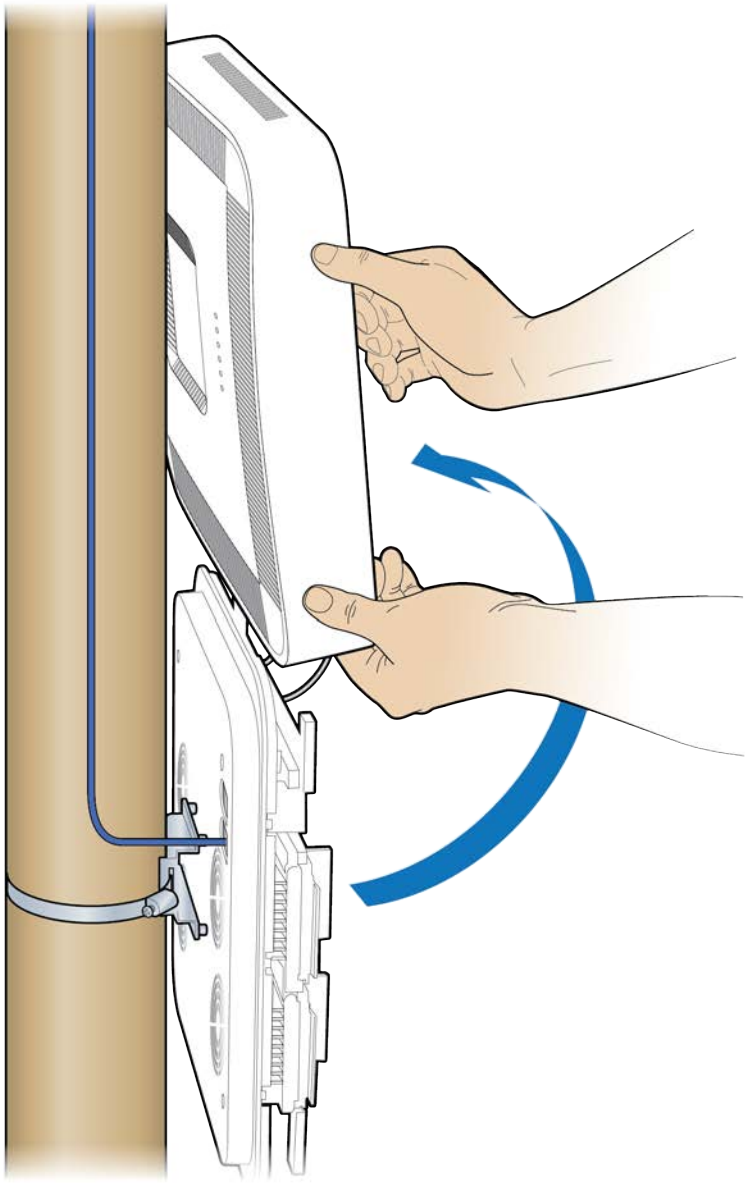

2 Disconnect the Ethernet cable.

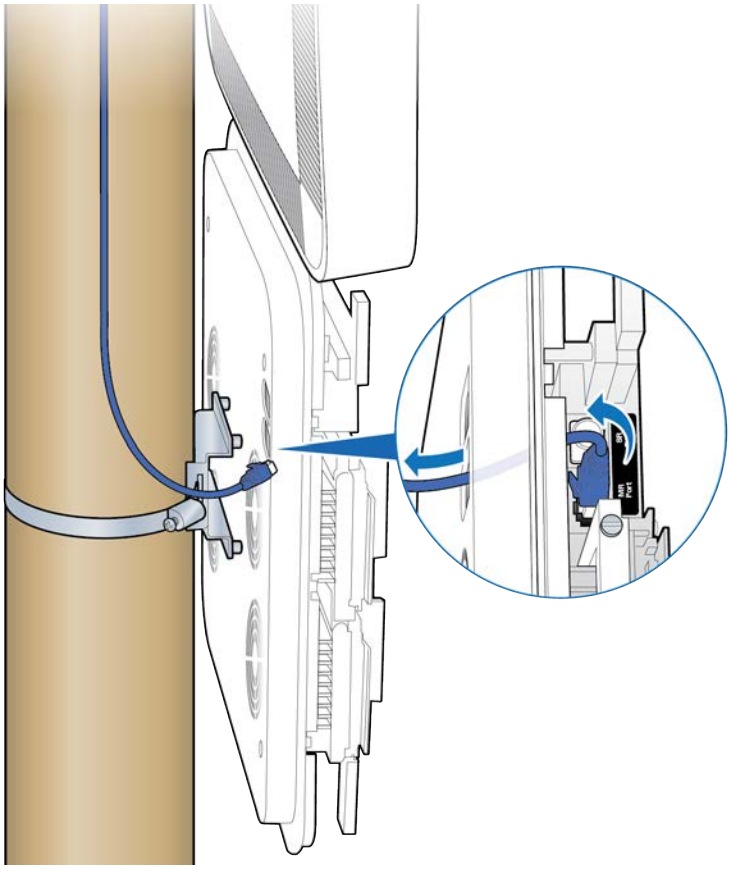

3 Loosen the clamp and remove the RP.

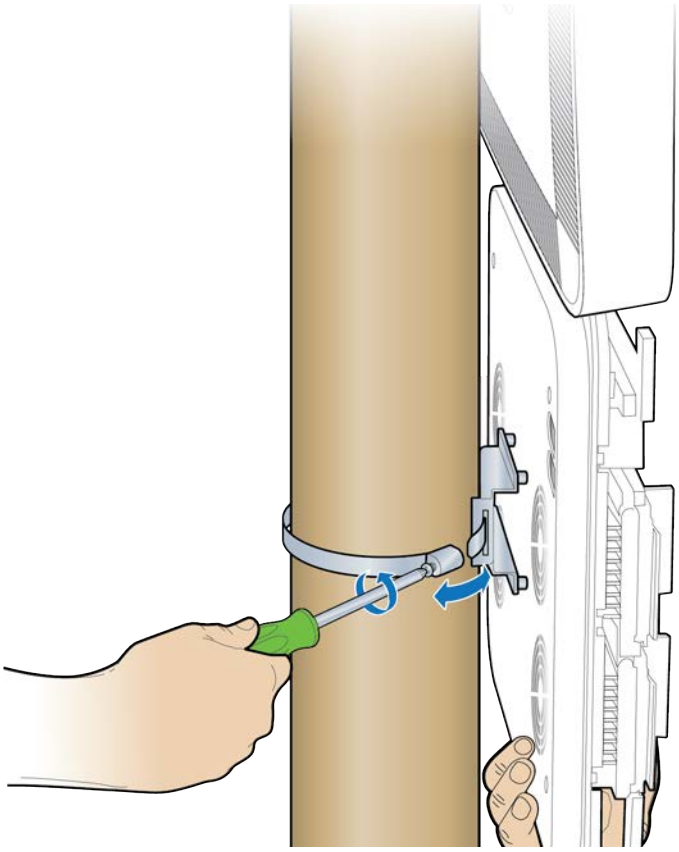

4 Attach the bracket to the replacement RP.

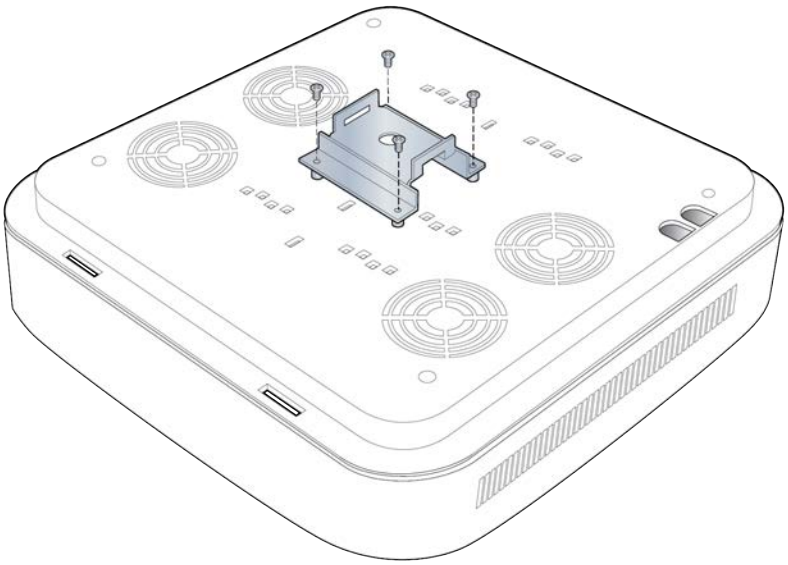

5 Attach the replacement RP to the pole using the clamp.

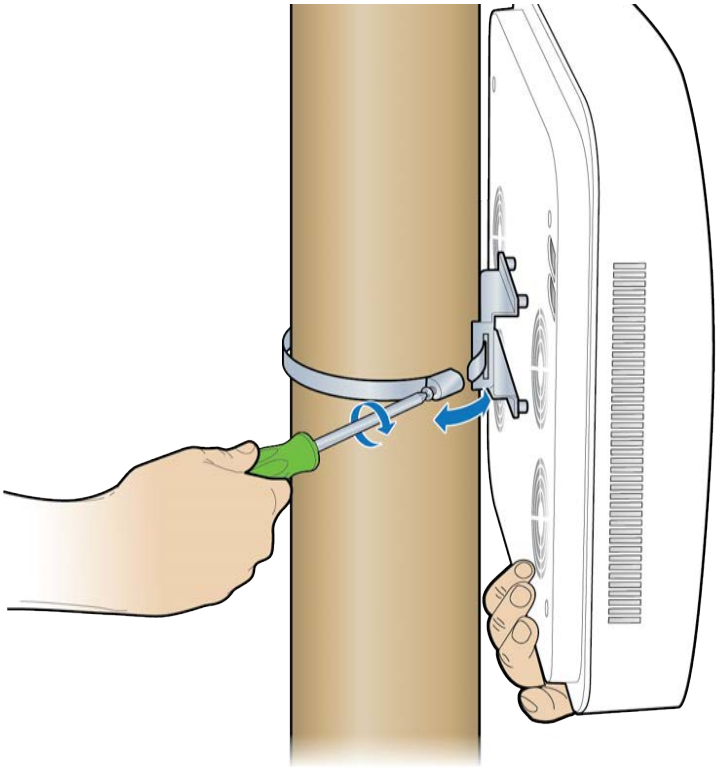

6 Remove the cover and connect the Ethernet cable to the RP.

NOTE: The cover is attached to the RP with two lanyards.

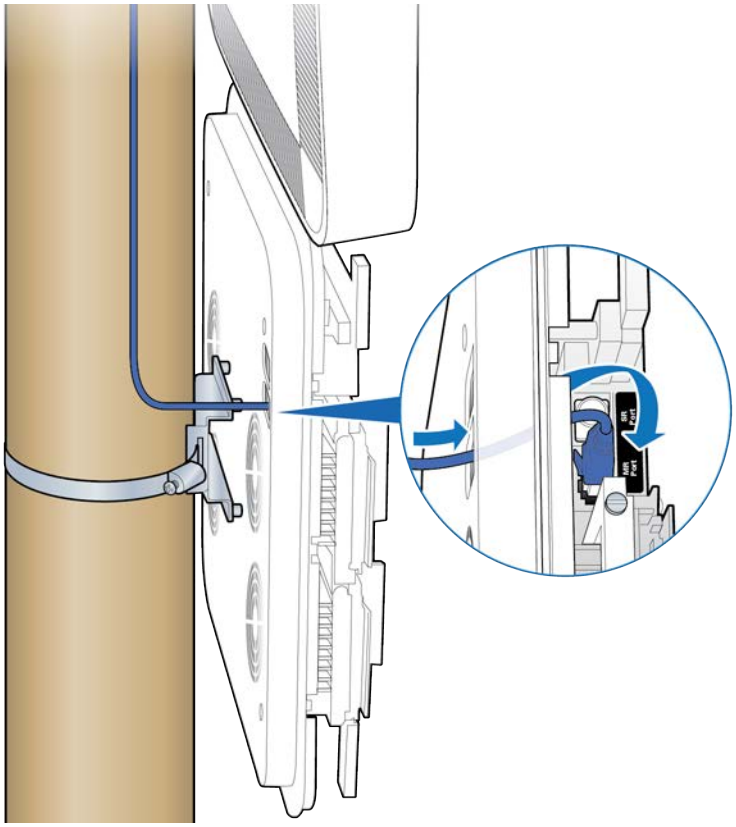

7 Replace the cover on the RP.

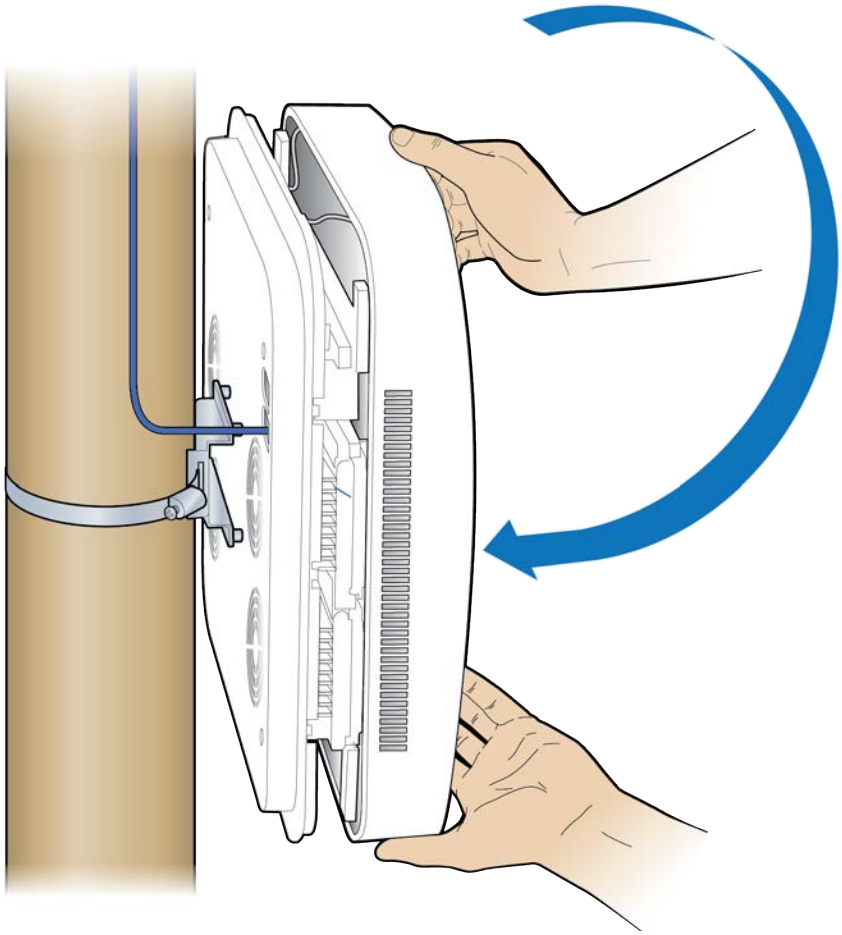

8 Verify the RP installation. The operational state of the RP can be determined by the LED status on the RP. Additional information can be attained from the WebGUI status screens.

For verification procedures, see RP post-replacement verification.

Replacing RP5100i/RP5200i RF modules

The following procedures provide instructions for replacing a ONECELL Radio Point RF module.

WARNING

Disconnect the Ethernet cable(s) on the RP to remove the power. Failure to do so will cause damage to the RP.

Replacing RP5200i Radio Modules

The following procedures provide instructions for replacing a ONECELL RP5200i Radio Point radio module.

WARNING

Disconnect the Ethernet cable(s) on the RP to remove the power. Failure to do so will cause damage to the RP.

1. Remove the RP
   - from the ceiling, see Ceiling Mount on page D-17
   - from the wall, see Wall mount on page D-23
   - from a rod, see Flown mount on page D-30
   - from a pole, see Pole mount on page D-36
2. Remove the RP cover.

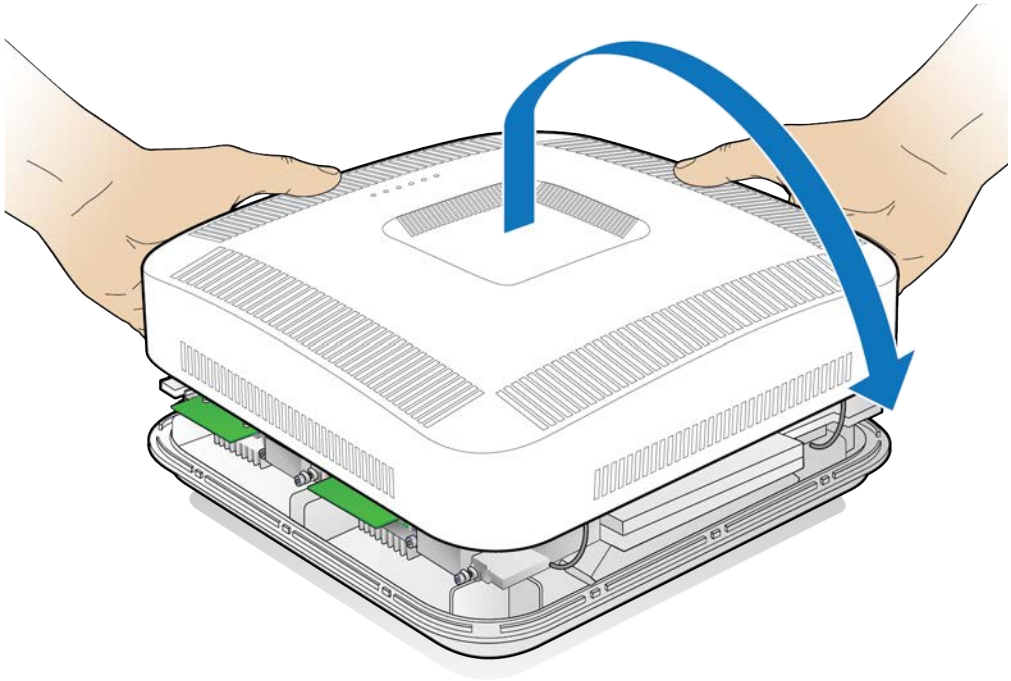

3. Using a Torx T10 screwdriver, loosen the screws on the Radio Module and remove it.

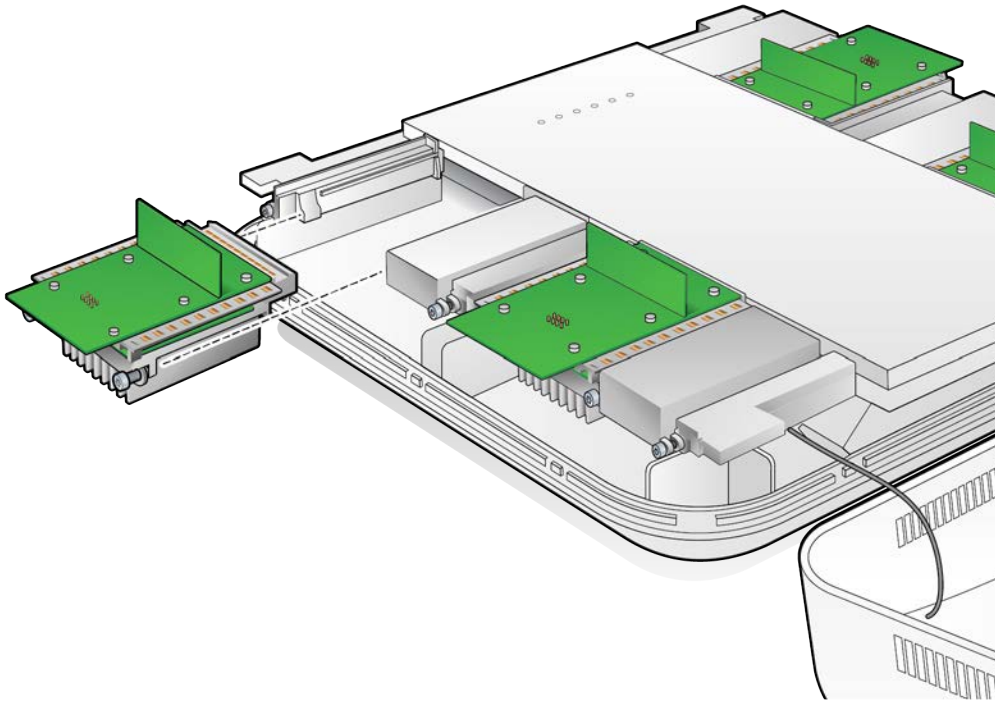

4 Insert the replacement RF module and tighten the screws.

5 Replace the RP cover.

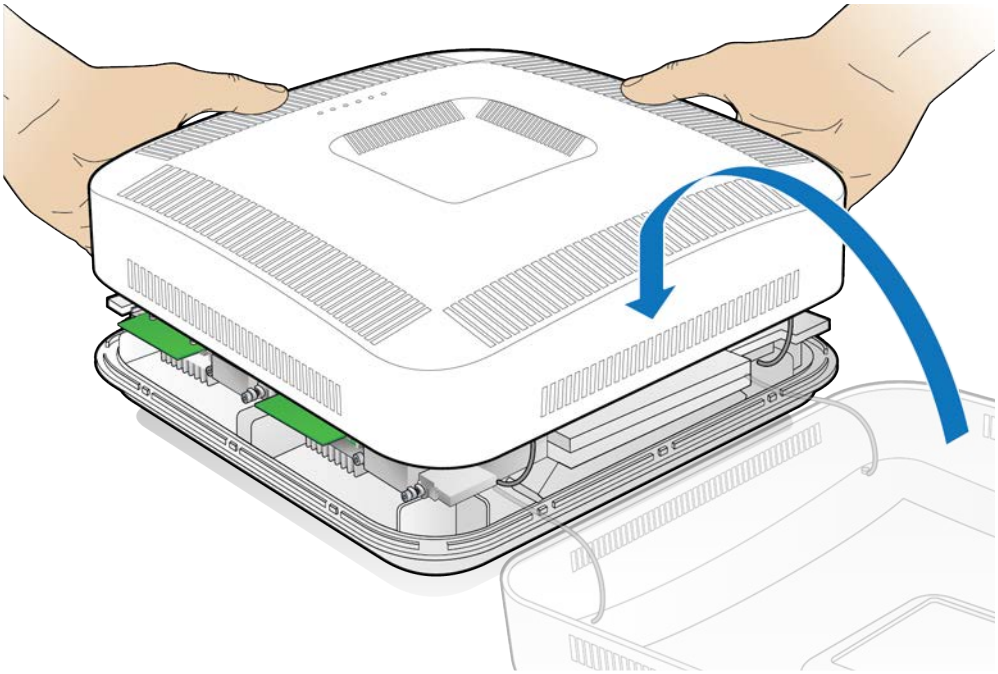

6 Reinstall the RP. See

- Ceiling Mount on page D-17
- Wall mount on page D-23
- Flown mount on page D-30
- Pole mount on page D-36

7 Verify the RF module installation. The operational state of the RF module can be determined by the LED status on the RP. Additional information can be attained from the WebGUI status screens. See RP post-replacement verification

Replacing RP5100i Radio Modules

WARNING

Disconnect the Ethernet cable(s) on the RP to remove the power. Failure to do so will cause damage to the RP.

1 Remove the RP. See

- Replacing a ceiling RP5100i (above tile)
- Replacing a flown mounted Indoor RP
- Replacing a pole mounted Indoor RP

2 Remove the RP cover.

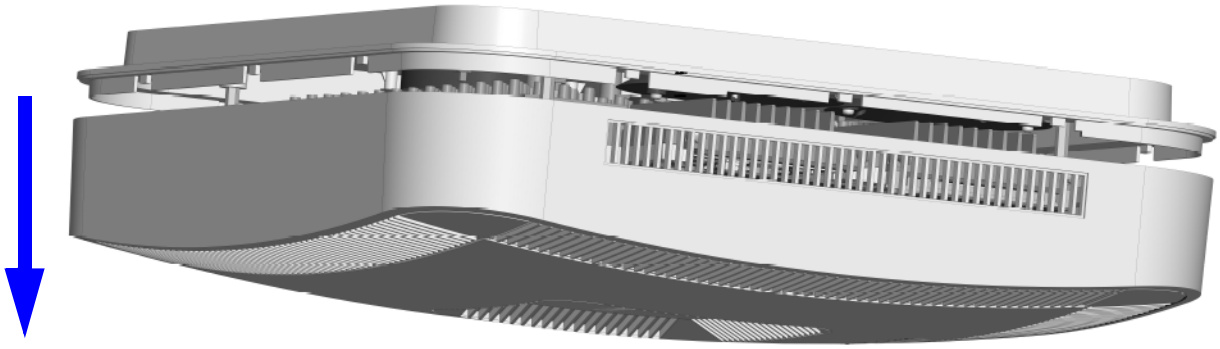

3 Disconnect the Ethernet cable on the RP.

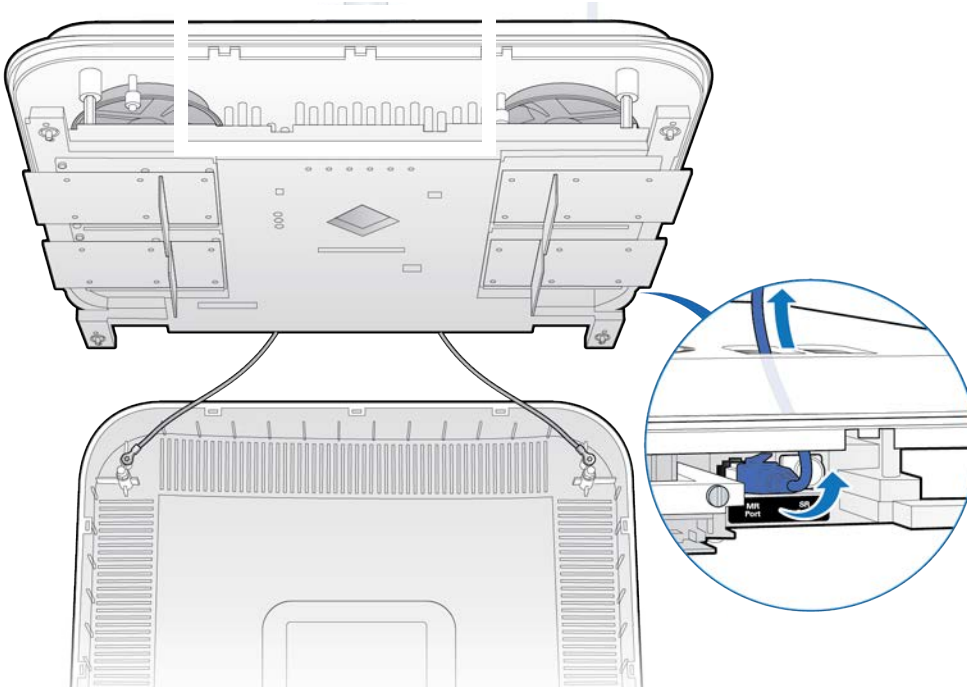

4 Unscrew the RF module.

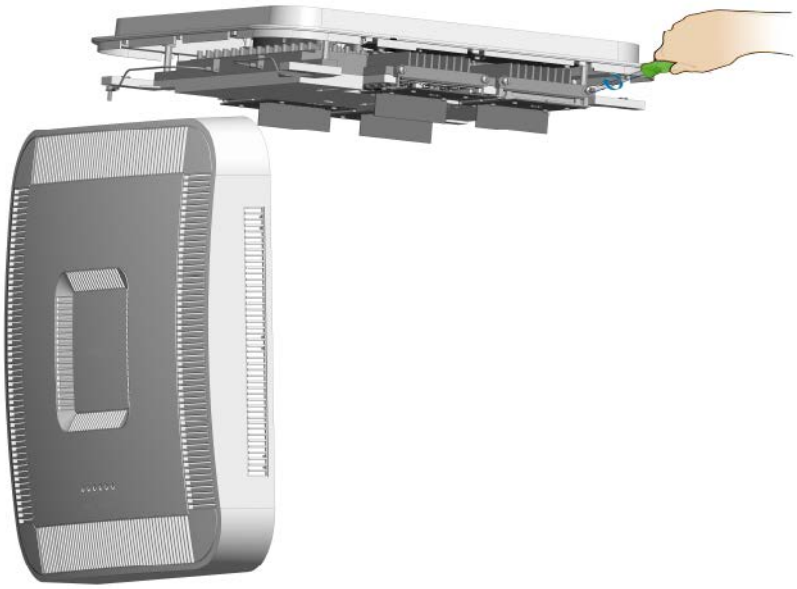

5 Remove the RF module.

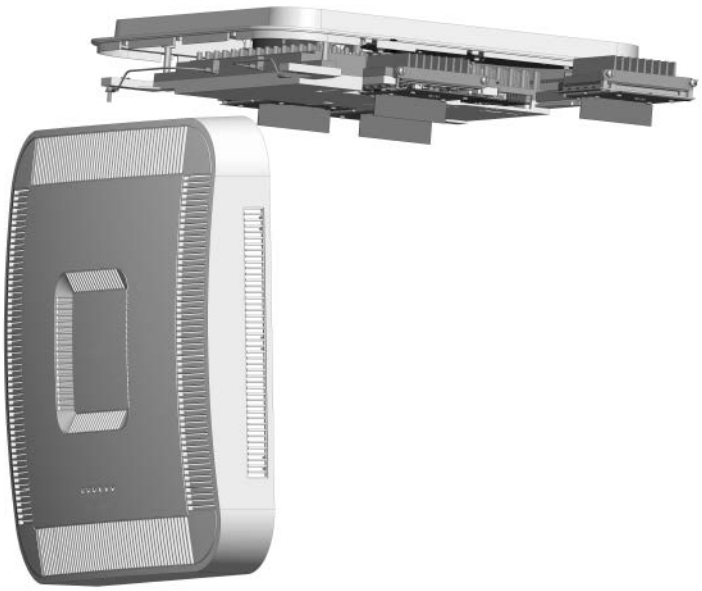

6 Install the replacement RF module.

7 Secure it in the slot.

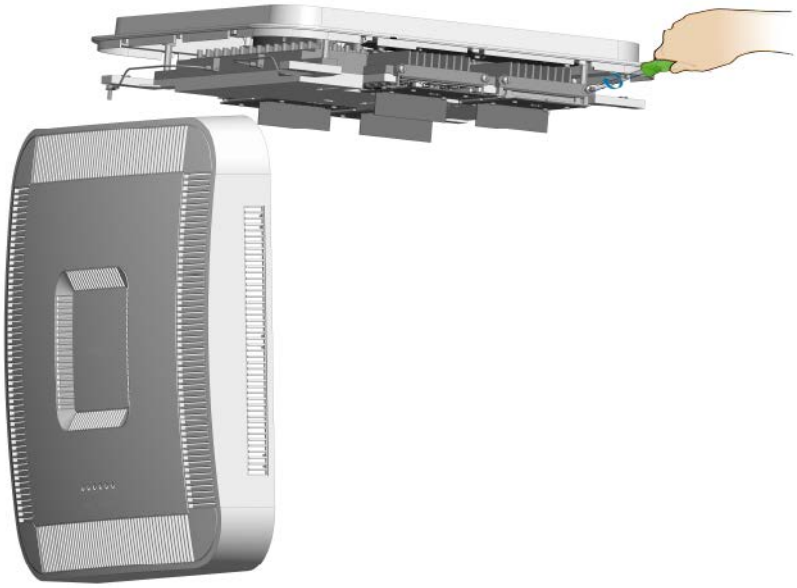

8 Connect the Ethernet cable.

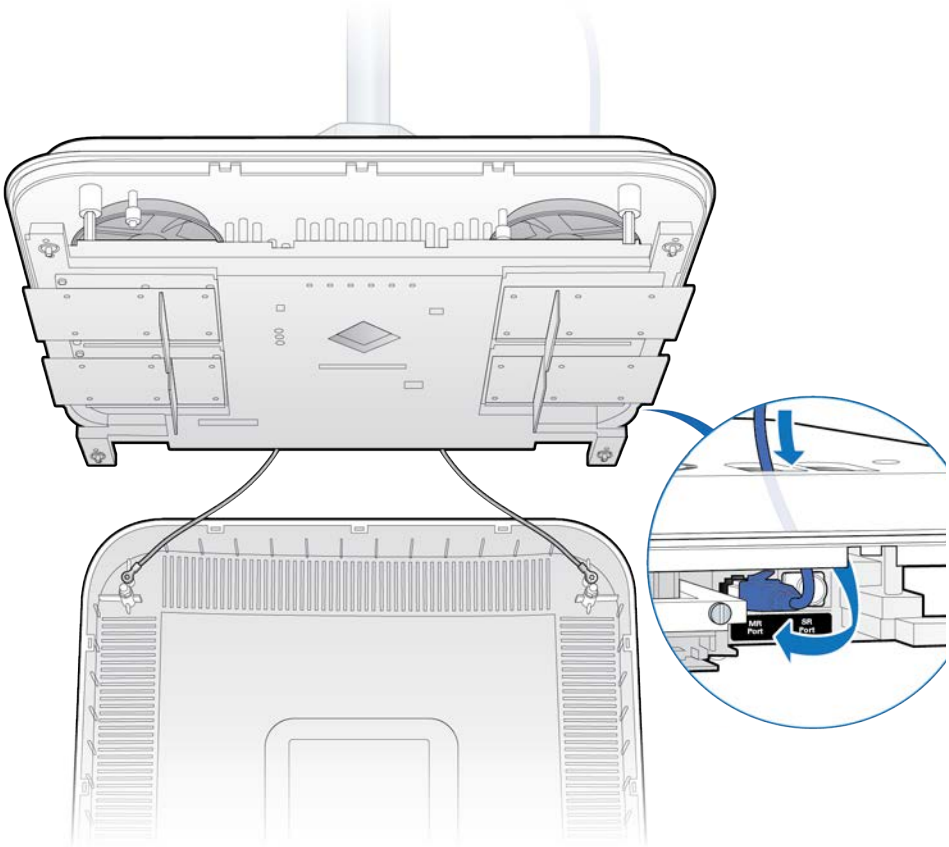

9 Attach the RP cover.

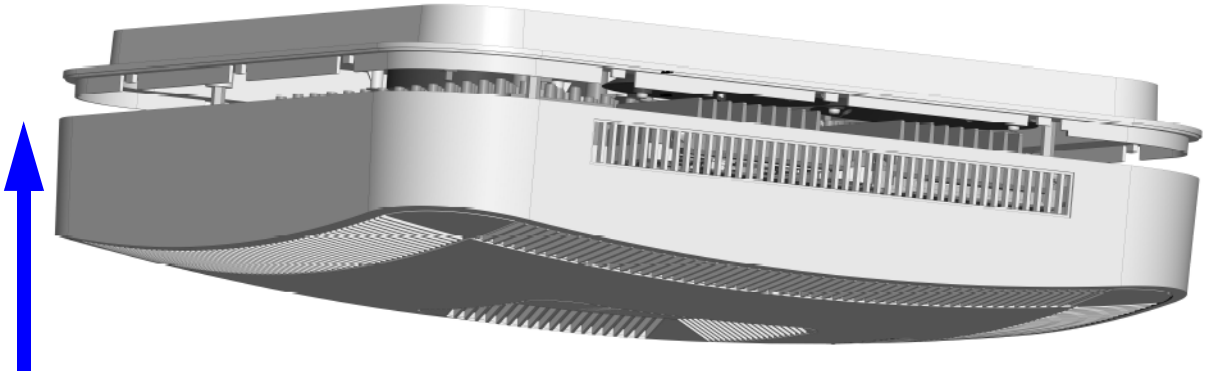

10 Verify the RF module installation. The operational state of the RF module can be determined by the LED status on the RP. Additional information can be attained from the WebGUI status screens.

For verification procedures, see RP post-replacement verification.

Replacing RP2000 series Radio Points

This procedure provides instructions for replacing a ONECELL RP2000 series Radio Point in a live network environment.

Replacing a ceiling Indoor RP (above tile)

1 Remove the ceiling tile below the mounted RP to allow access to the mounting hardware and Ethernet cable.

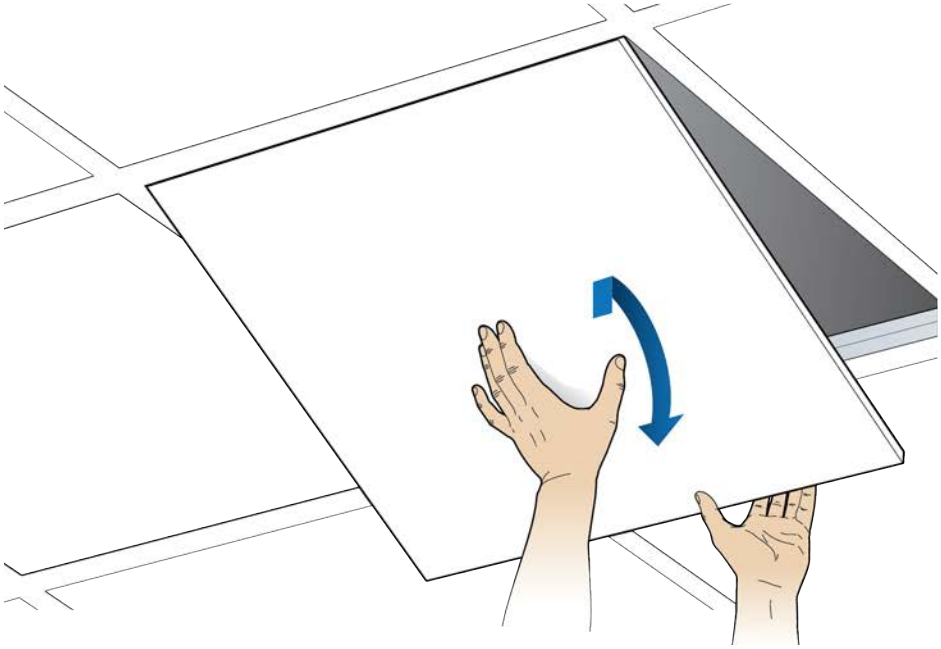

2 Loosen the locking screw.

NOTE: The locking screw is not on newer RP2000s.

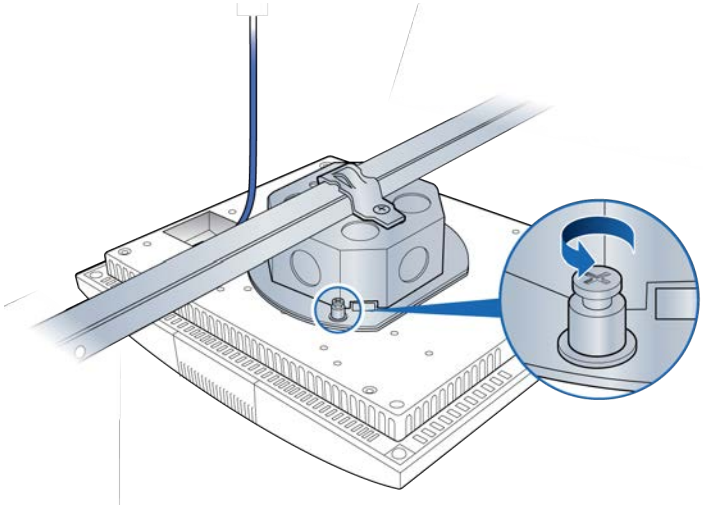

3 Disconnect the Ethernet cable.

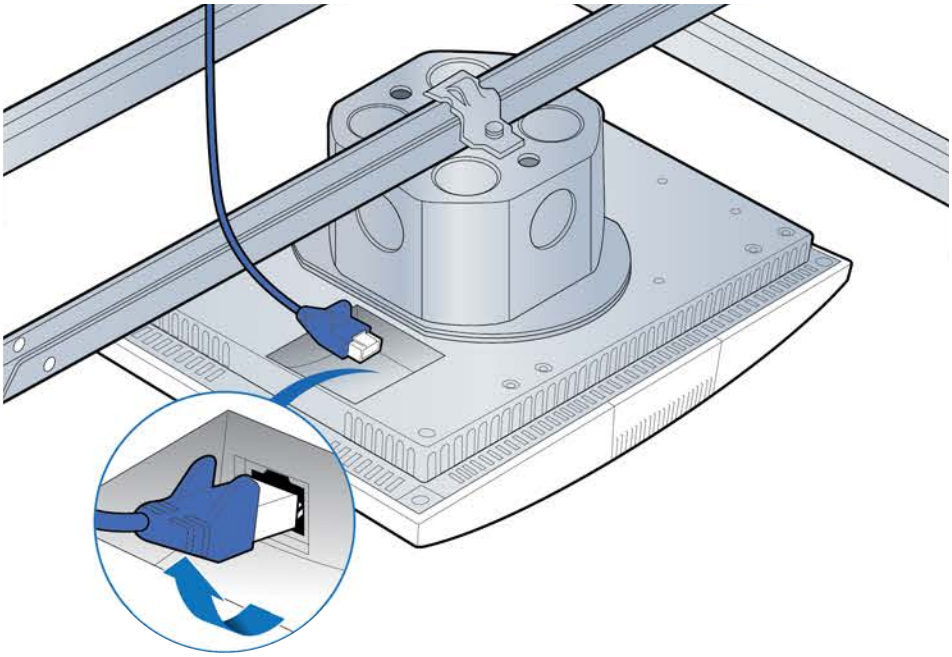

4 Twist the RP to remove it.

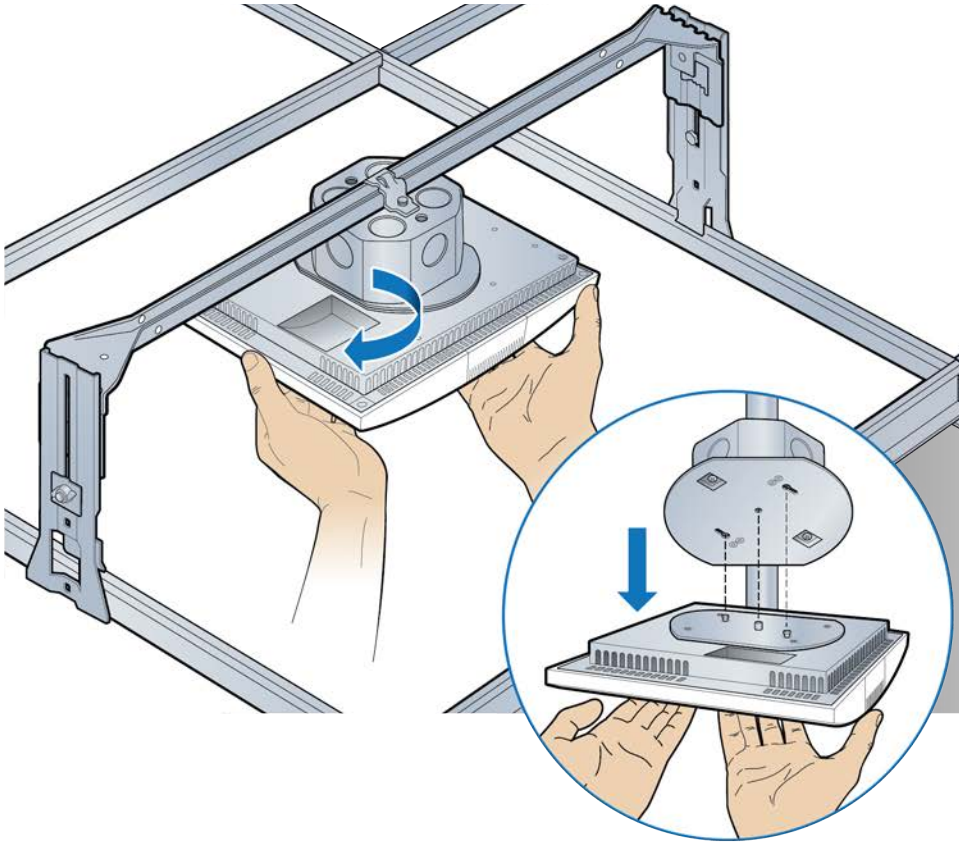

5 Remove the mounting plate from the failed RP and attach it to the replacement RP.

Set the failed RP aside.

NOTE: Apply thread locking compound to the screws prior to installation.

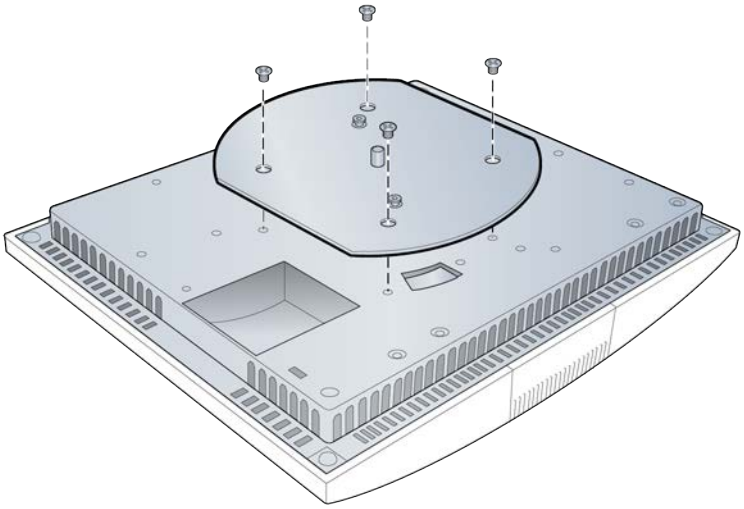

6 Attach the RP to the octagonal mounting plate and twist to engage.

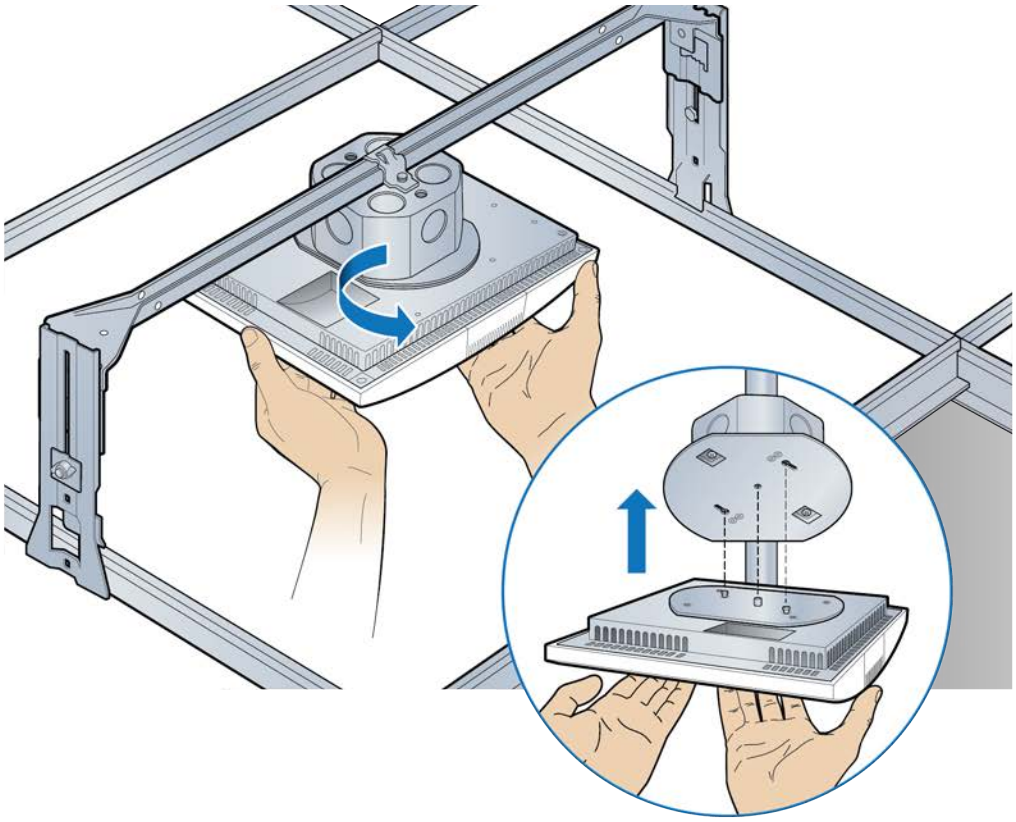

7 Connect the Ethernet cable to the RP.

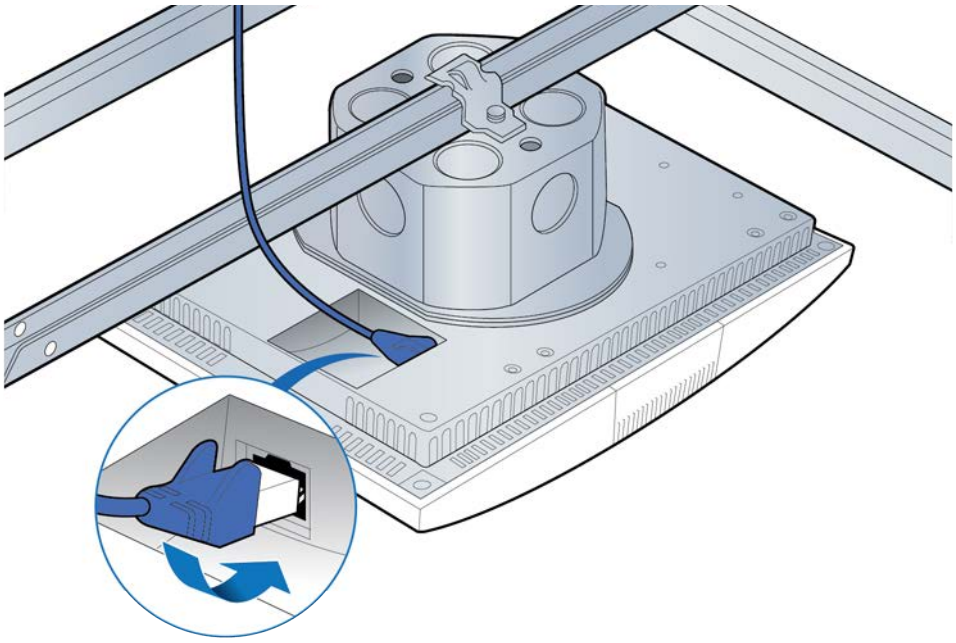

8 Replace the ceiling tile.

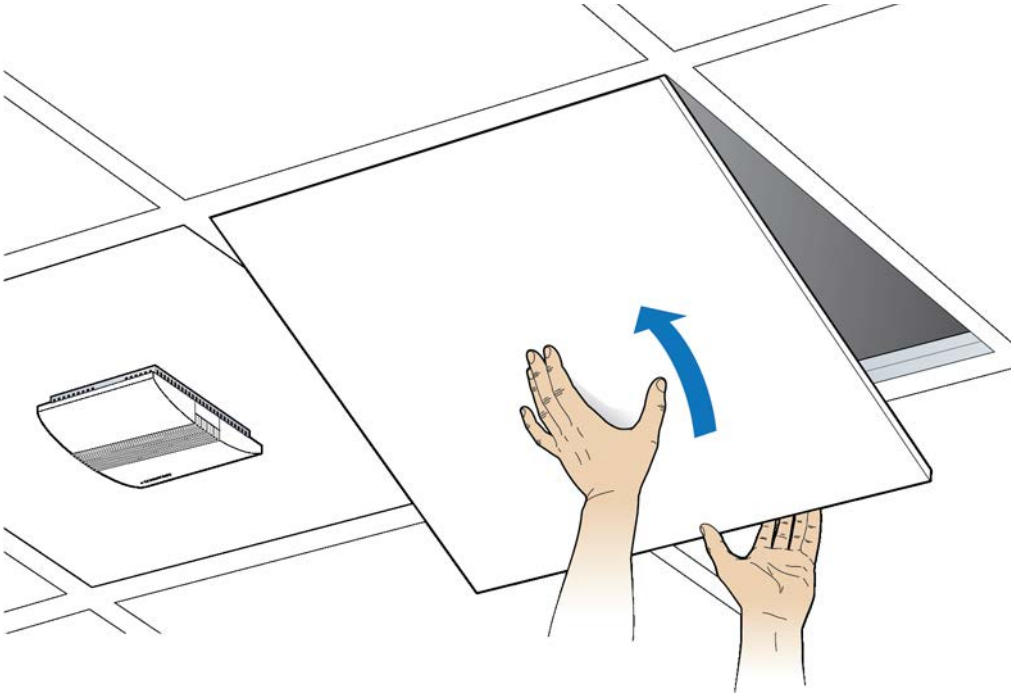

9 Verify the RP installation. See The operational state of the RP can be determined by the LED status on the RP. Additional information can be attained from the WebGUI status screens.

For verification procedures, see RP post-replacement verification.

Replacing a ceiling Indoor RP (on tile)

1 Disconnect the Ethernet cable from the RP.

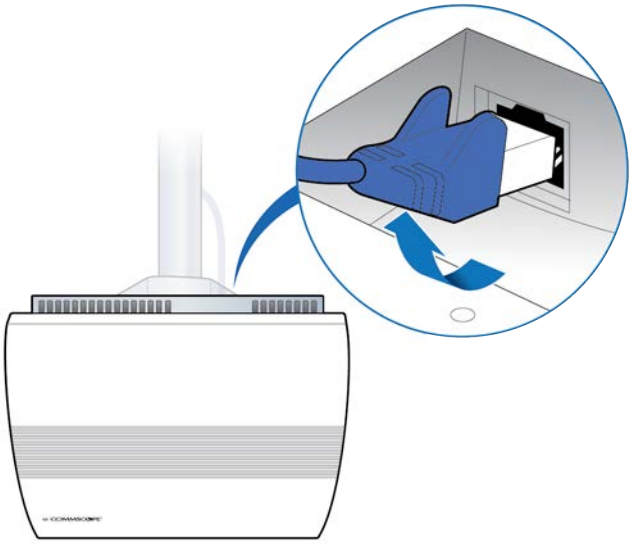

2 If there is a locking screw, loosen it.

3 Twist the RP.

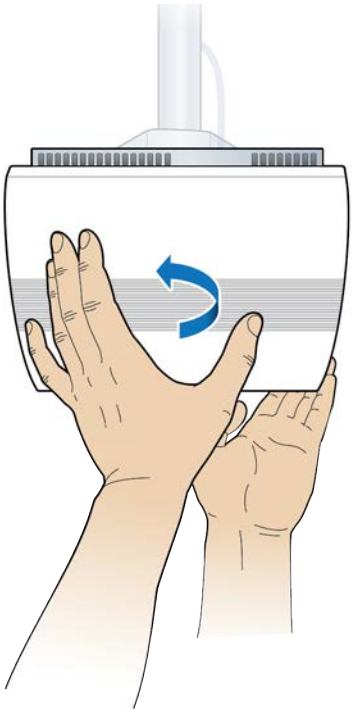

4 Remove the RP. Remove the mounting plate from the RP and set the RP aside.

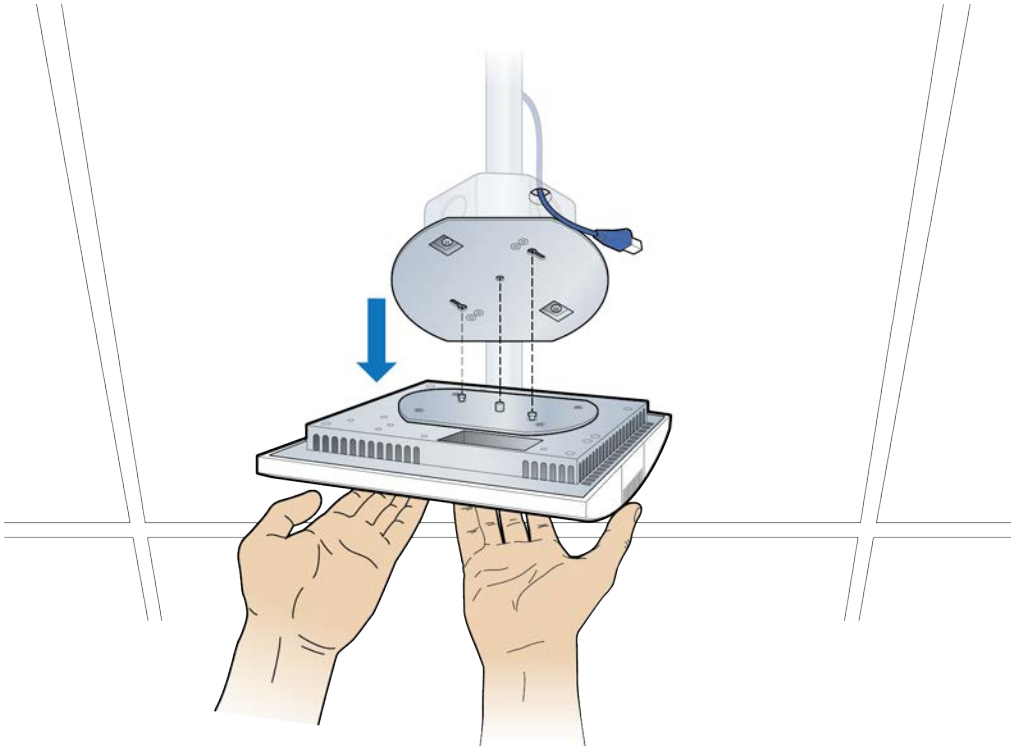

5 Attach the plate to the replacement RP.

NOTE: Apply thread locking compound to the screws prior to installation.

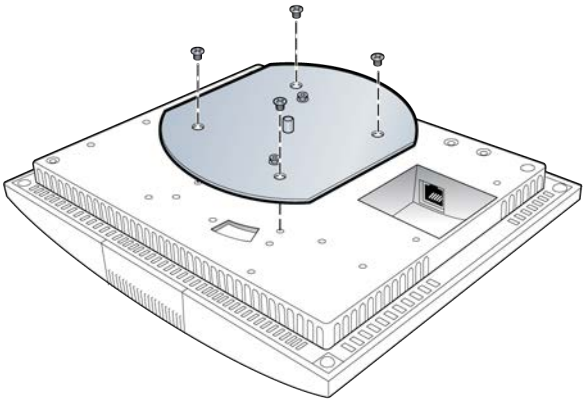

6 Attach the RP to the octagonal mounting plate.

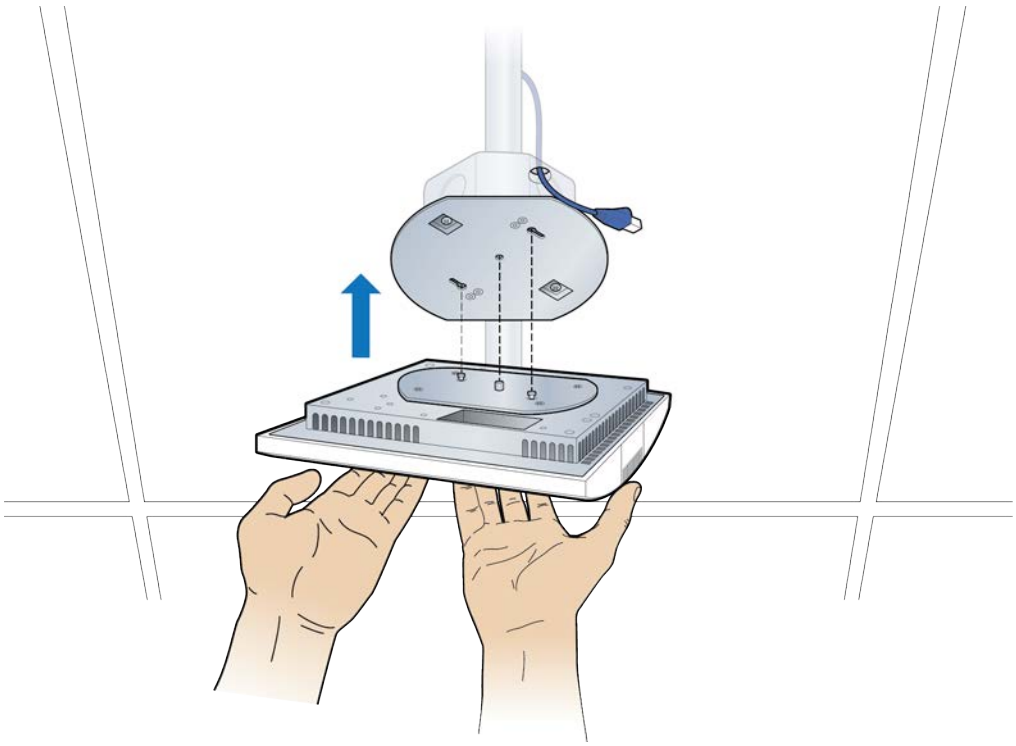

7 Secure RP to octagon plate.

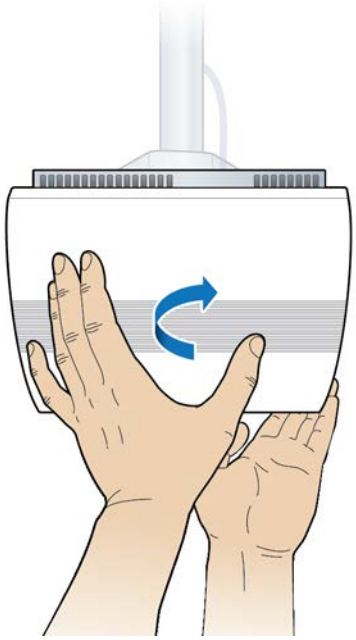

8 Connect the Ethernet cable to the RP.

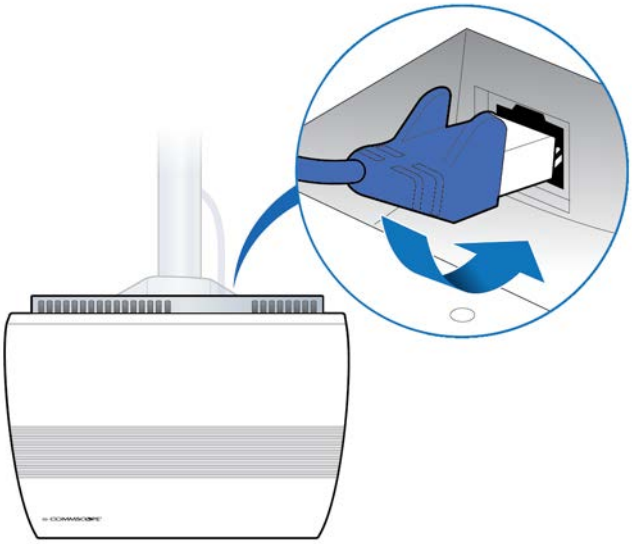

9 Verify the RP installation. See The operational state of the RP can be determined by the LED status on the RP. Additional information can be attained from the WebGUI status screens.

For verification procedures, see RP post-replacement verification.

Replacing a flown mounted Indoor RP

1 Disconnect the Ethernet cable.

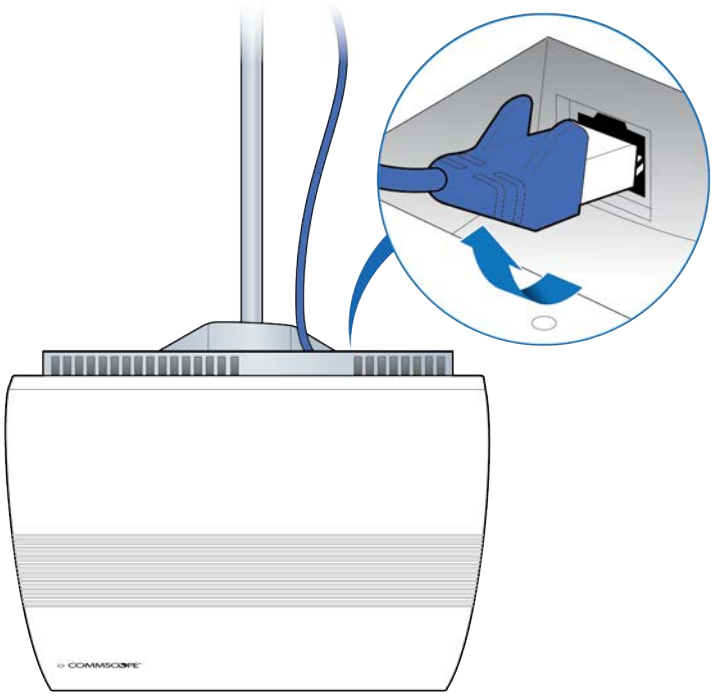

2 Remove the RP.

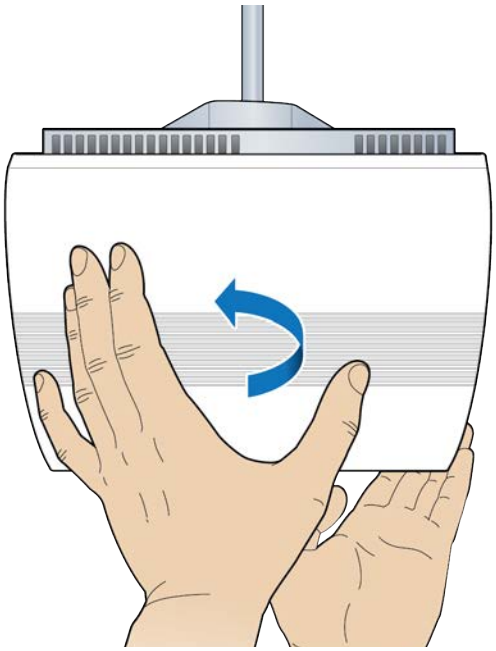

3 Remove the mounting plate from the RP and set the failed RP aside.

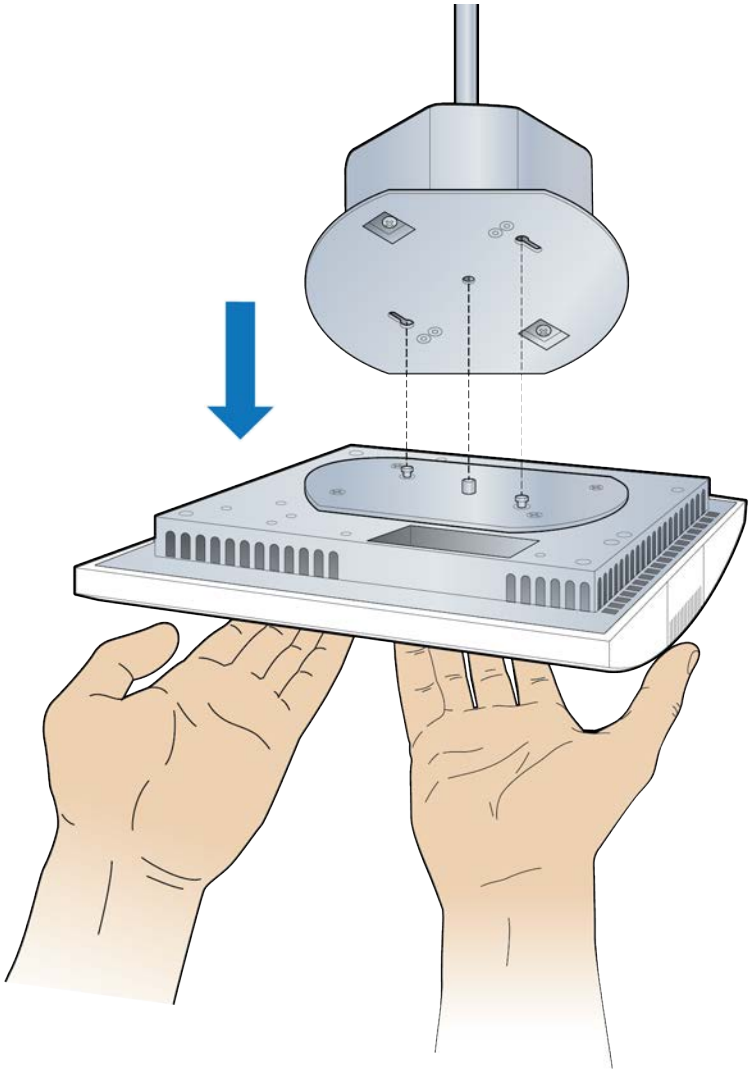

4 Attach the mounting plate to the replacement RP.

NOTE: Apply thread locking compound to the screws prior to installation.

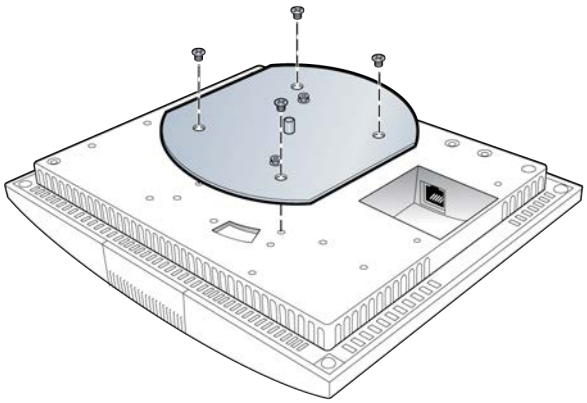

5 Attach the RP to the octagon plate.

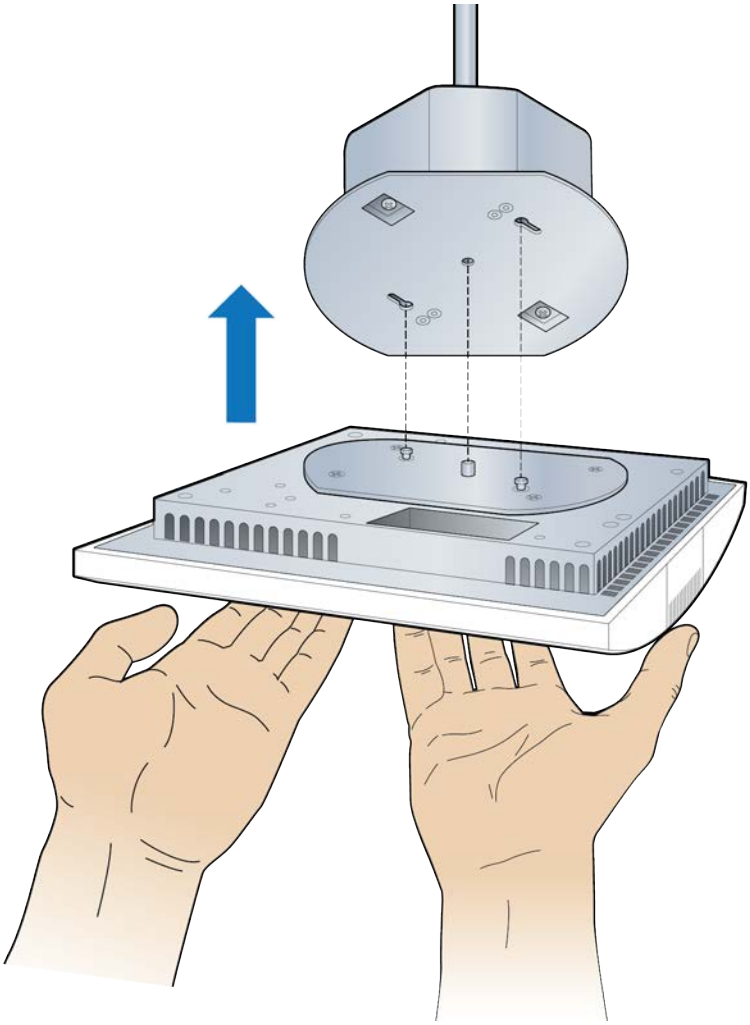

6 Secure the RP.

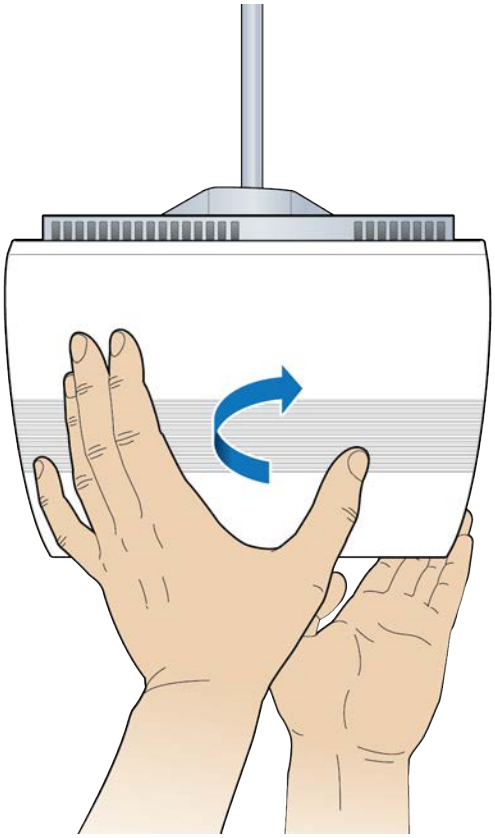

7 Connect the Ethernet cable to the RP.

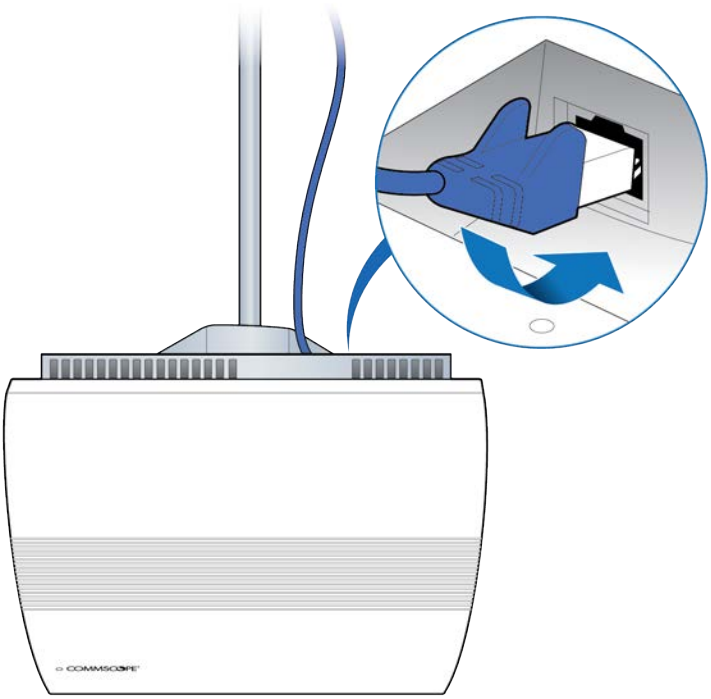

8 Verify the RP installation. See The operational state of the RP can be determined by the LED status on the RP. Additional information can be attained from the WebGUI status screens.

For verification procedures, see RP post-replacement verification.

Replacing a pole mounted Indoor RP

1 Disconnect the Ethernet cable.

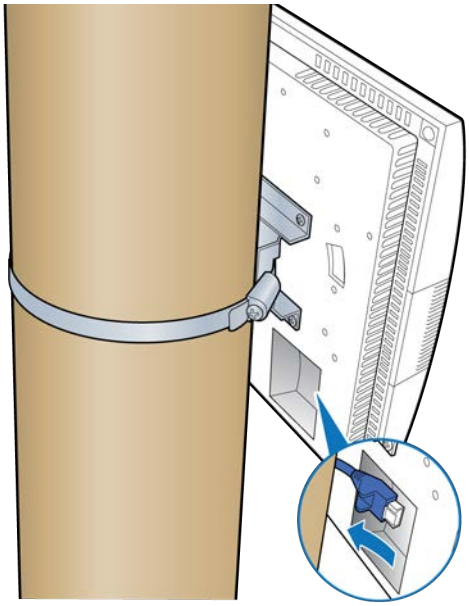

2 Loosen the clamp, remove the RP and set it aside.

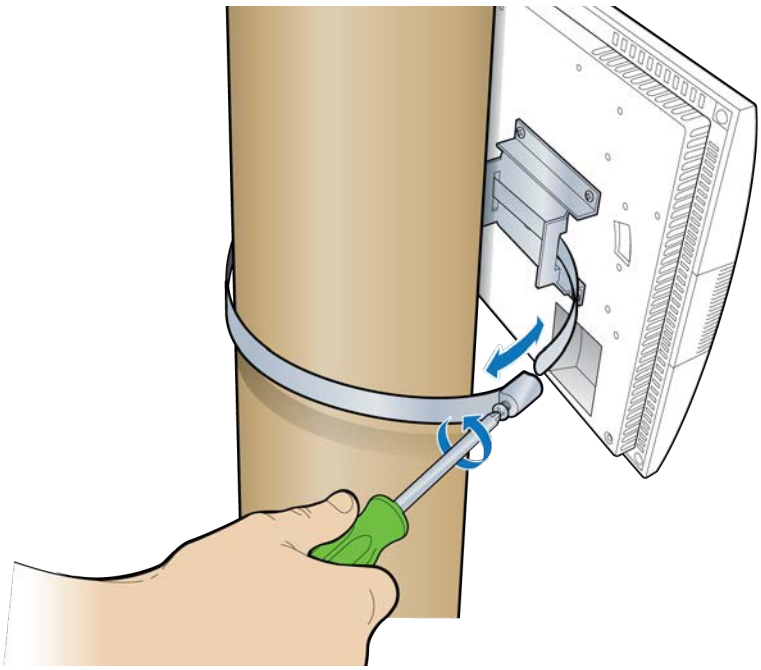

3 Remove the bracket from the failed RP and attach it to the replacement RP.

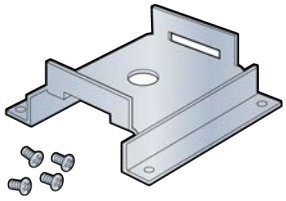

Bracket

4 Attach the replacement RP to the pole using the clamp.

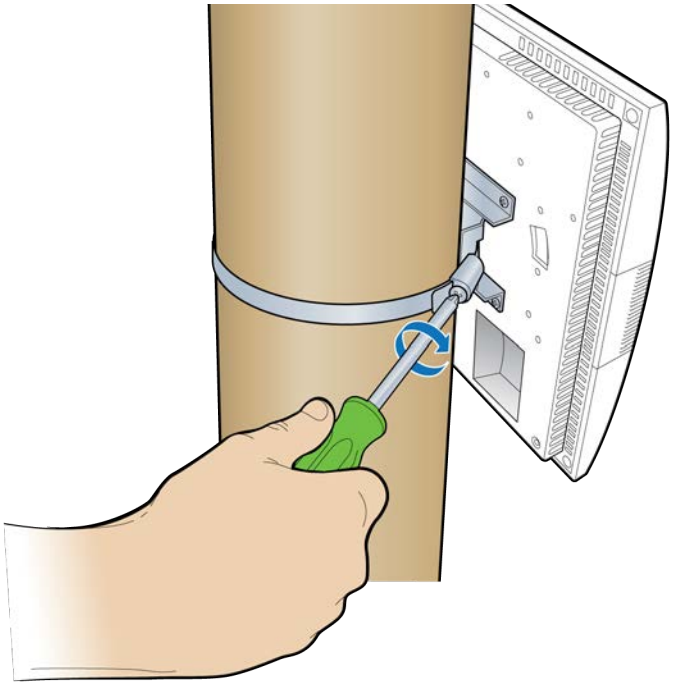

5 Connect the Ethernet cable to the RP.

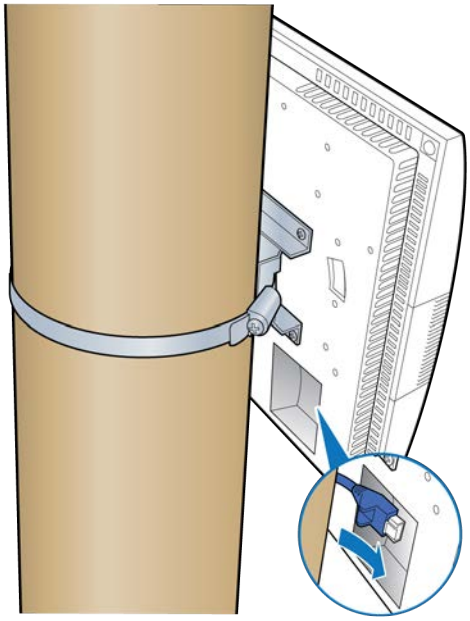

6 Verify the RP installation. See The operational state of the RP can be determined by the LED status on the RP. Additional information can be attained from the WebGUI status screens.

For verification procedures, see RP post-replacement verification.

Replacing a vertical pole mounted Rugged RP

1 Disconnect the Ethernet cable and the antenna couplers from the RP.

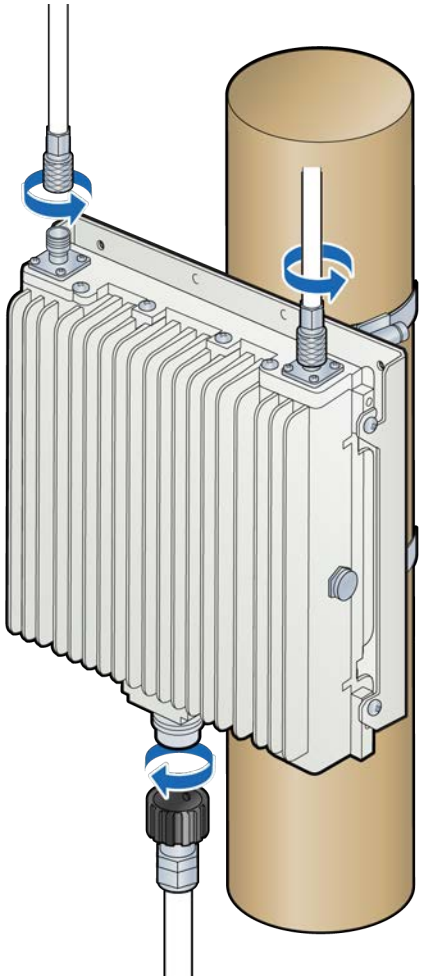

2 Remove the screws on the bottom of the RP and loosen the top screws.

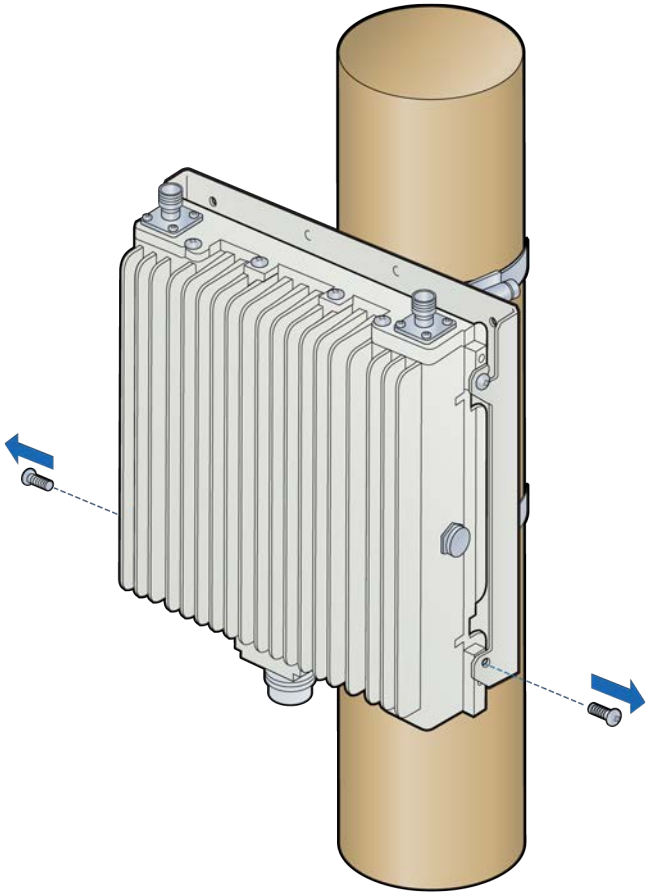

3 Lift the RP off of the mounting plate and set it aside.

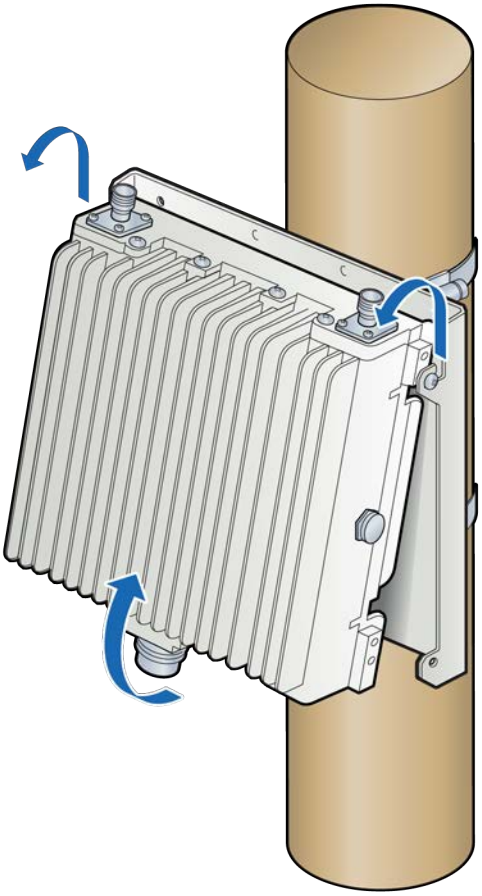

4 Insert two screws into the upper holes on the replacement RP.

NOTE: Do not tighten the screws.

CAUTION

Ensure that the RP is oriented correctly with the two antenna connectors at the top of the RP.

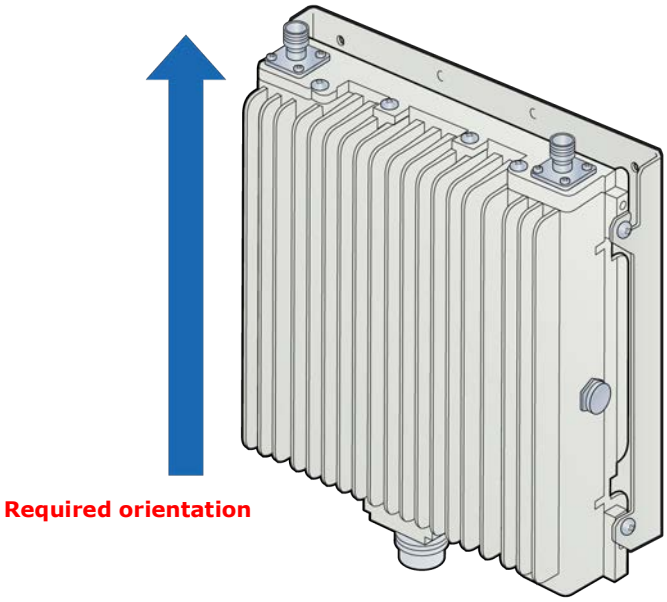

5 Hang the RP to the mounting bracket using the installed screws. Align holes at bottom location of bracket and install two additional screws.

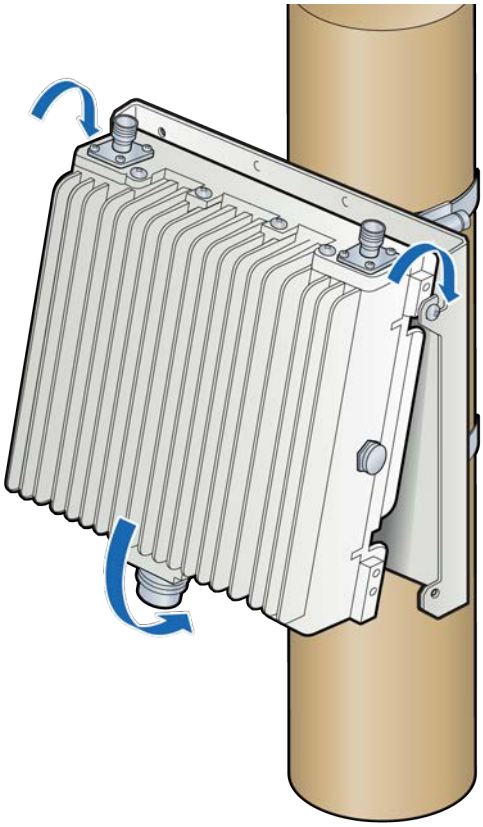

6 Insert two screws on the bottom of the RP and tighten all four screws.

NOTE: The torque requirement for the mounting screws is 20-21 in-lbs.

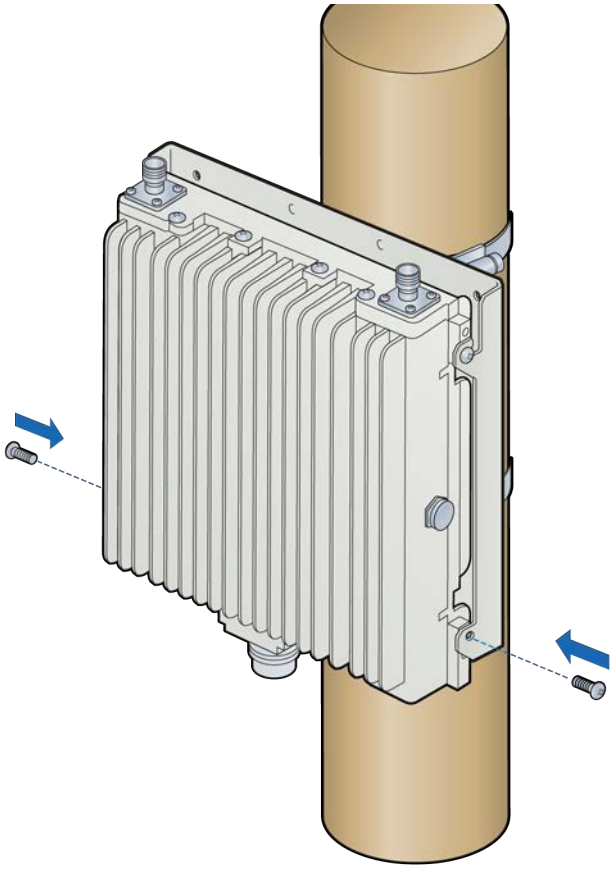

7 Connect the antenna couplers on the top of the RP.

NOTE: Check the antenna coupler manufacturer's documentation for torque requirements.

8 Connect the Ethernet cable RJ45 end to the bottom of the RP.

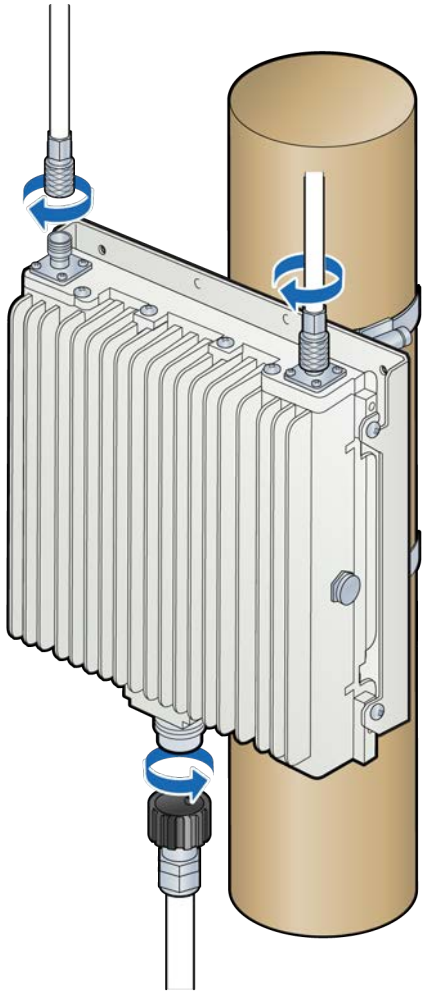

9 Verify the RP installation. See The operational state of the RP can be determined by the LED status on the RP. Additional information can be attained from the WebGUI status screens.

For verification procedures, see RP post-replacement verification.

Replacing a horizontal pole mounted Rugged RP

1 Disconnect the Ethernet cable and the antenna couplers from the RP.

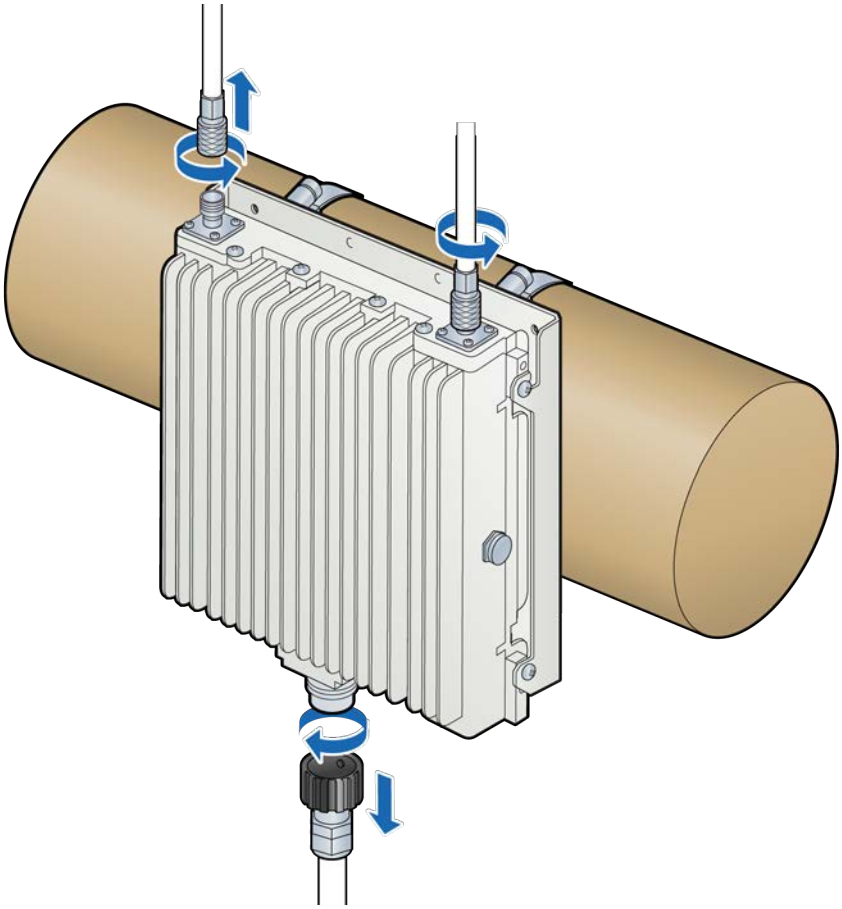

2 Remove the screws on the bottom of the RP and loosen the top screws.

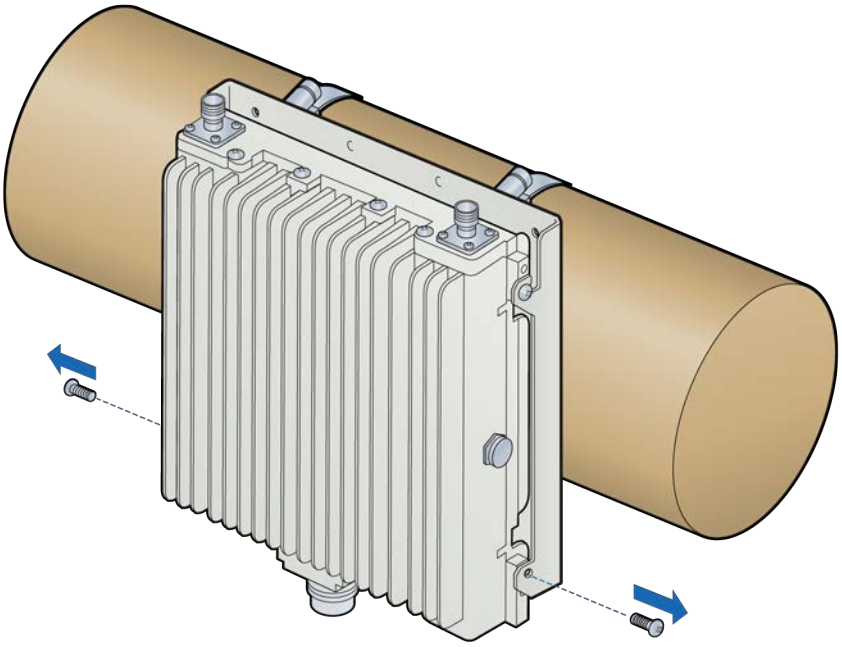

3 Lift the failed RP off of the mounting plate and set it aside.

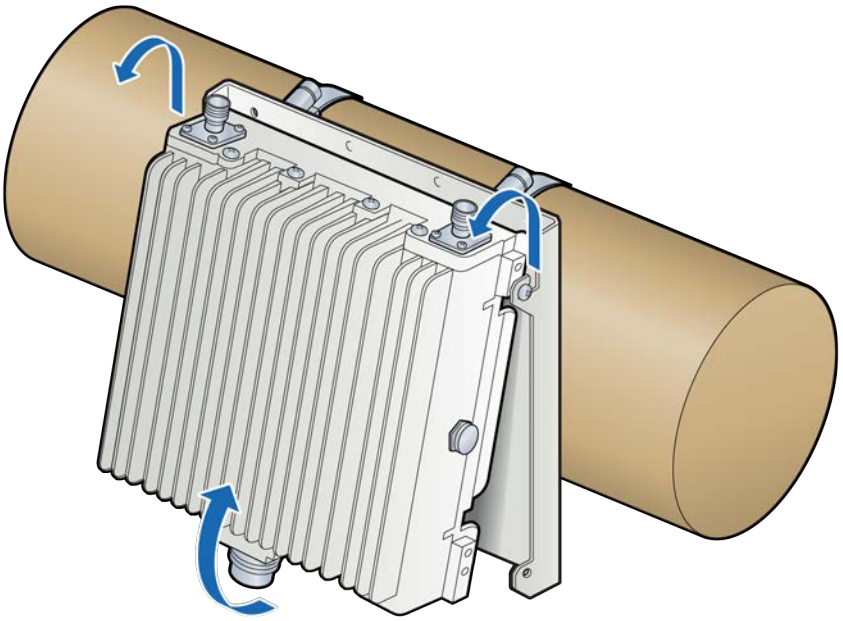

4 Insert two screws into the upper holes on the replacement RP.

NOTE: Do not tighten the screws.

CAUTION

Ensure that the RP is oriented correctly with the two antenna connectors at the top of the RP.

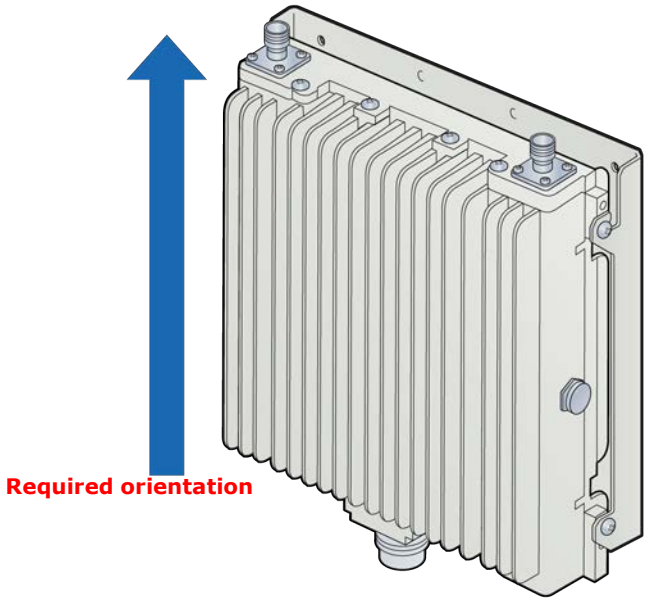

5 Attach the RP to the mounting plate. Tighten the top screws on the RP and insert and tighten the bottom screws on the RP.

NOTE: The torque requirement for the mounting screws is 20-21 in-lbs.