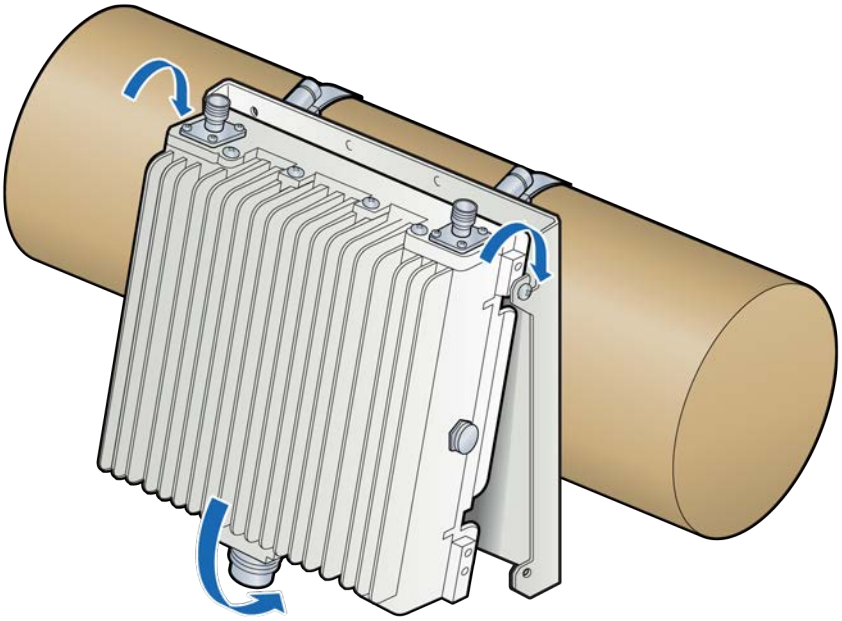

6 Connect the antenna couplers on the top of the RP.

NOTE: Check the antenna coupler manufacturer's documentation for torque requirements.

7 Connect the Ethernet cable RJ45 end to the bottom of the RP.

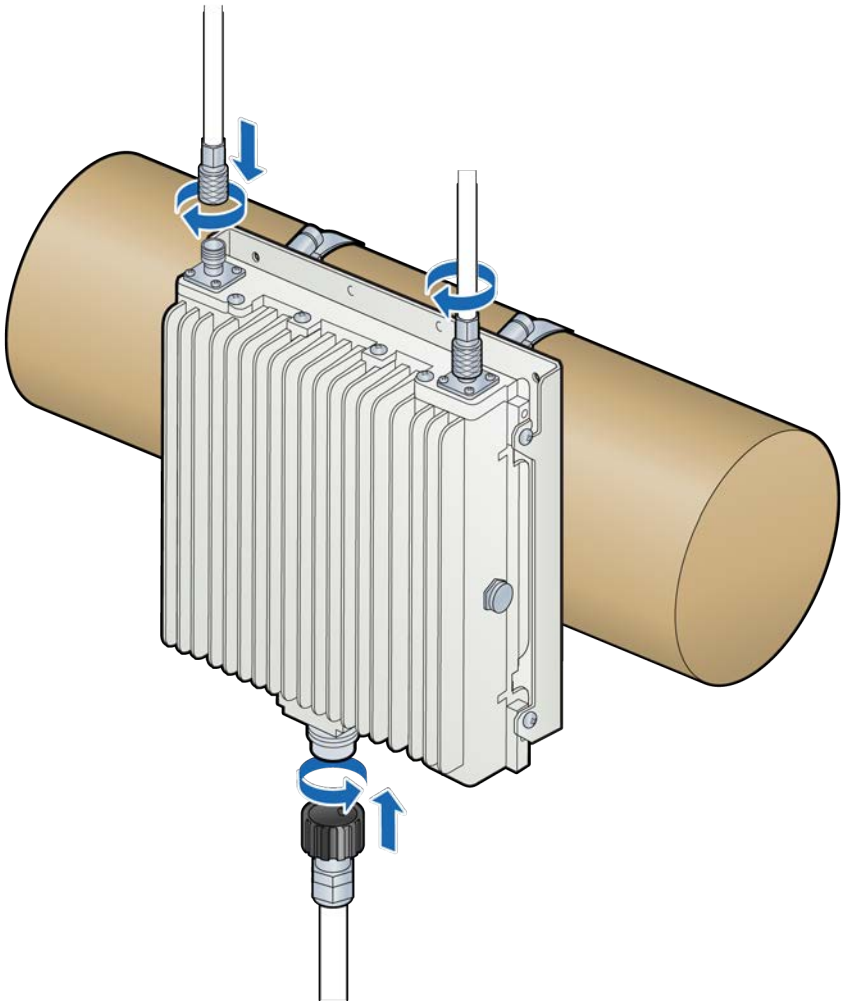

8 Verify the RP installation. See The operational state of the RP can be determined by the LED status on the RP. Additional information can be attained from the WebGUI status screens.

For verification procedures, see RP post-replacement verification.

Replacing a wall mounted Rugged RP

1 Disconnect the Ethernet cable and the antenna couplers from the RP.

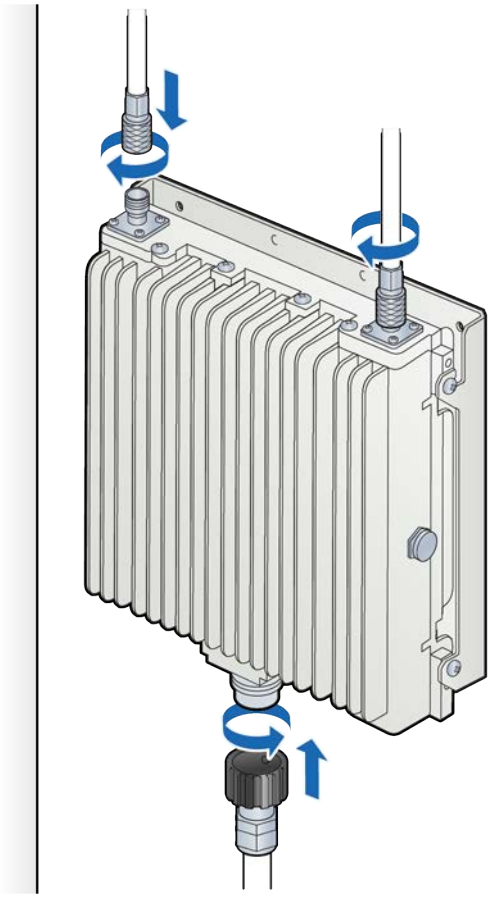

2 Remove the screws on the bottom of the RP, loosen the top screws and remove the RP from the mounting plate. Set the RP aside.

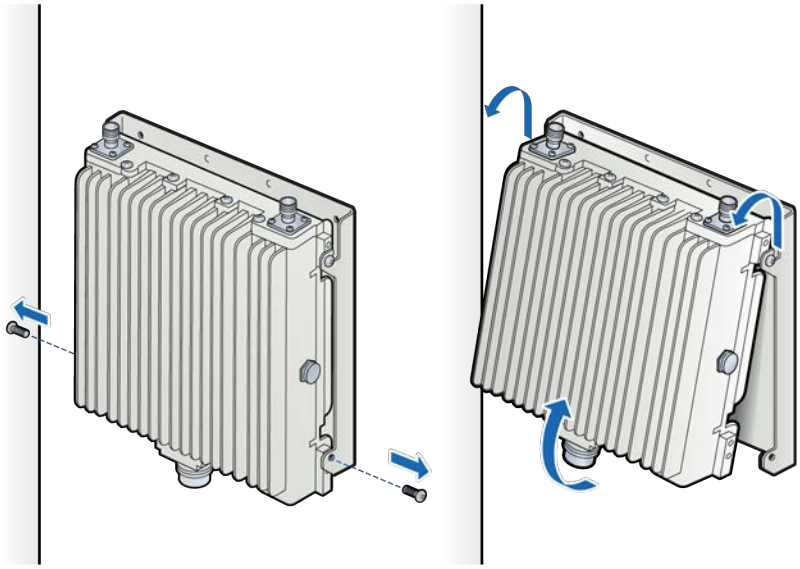

3 On the replacement RP, insert two screws into the upper holes.

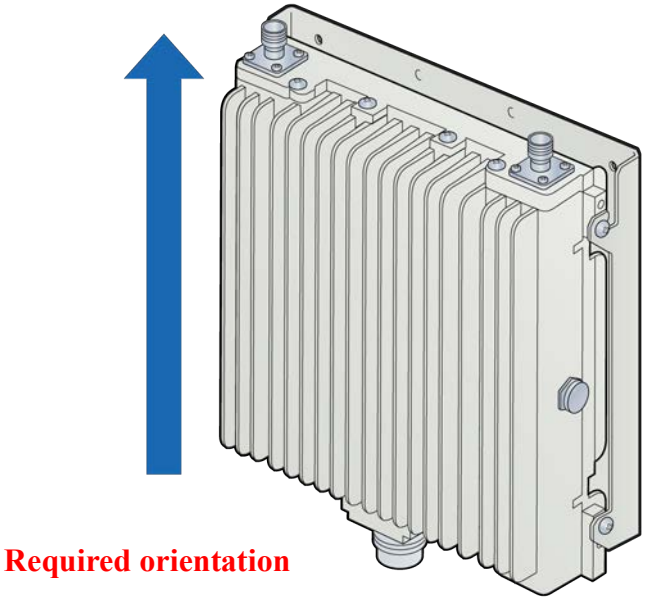

4 Attach the RP to the mounting plate. Tighten the top screws on the RP and insert the bottom screws on the RP.

NOTE: The torque requirement for the mounting screws is 20-21 in-lbs.

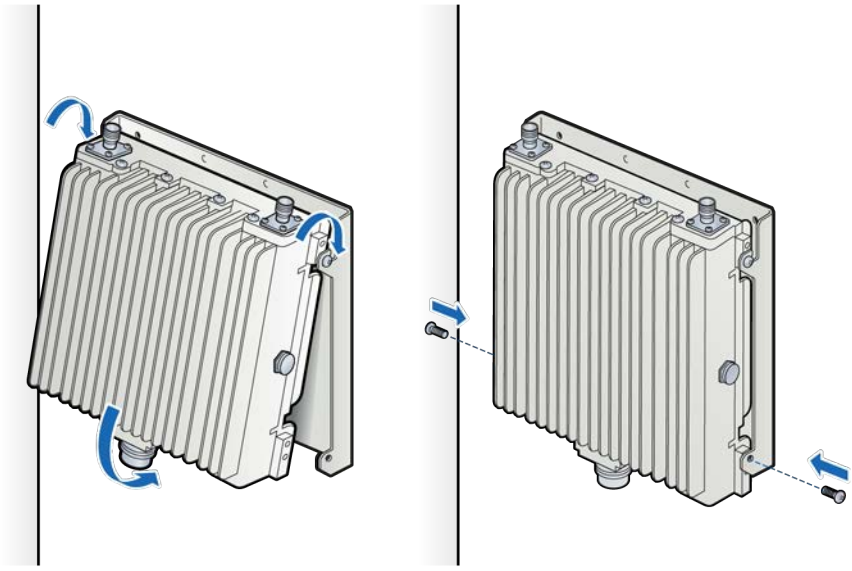

5 Connect the antenna couplers on the top of the RP.

NOTE: Check the antenna coupler manufacturer's documentation for torque requirements.

6 Connect the Ethernet cable RJ45 end to the bottom of the RP.

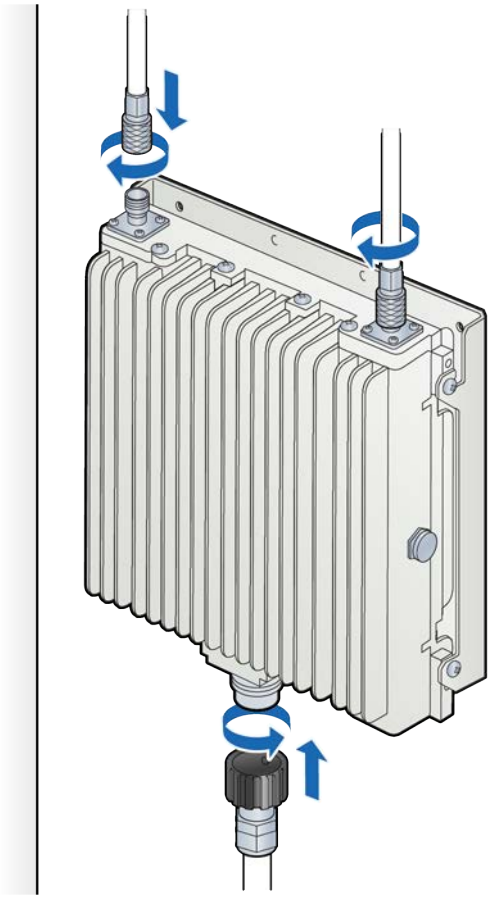

7 The operational state of the RP can be determined by the LED status on the RP. Additional information can be attained from the WebGUI status screens.

For verification procedures, see RP post-replacement verification.

RP post-replacement verification

The operational state of the replaced RP can be determined by the LED status on the RP. Additional information can be attained from the WebGUI status screens.

1 Connect the Ethernet cable to the MGMT port on the BC's front panel.

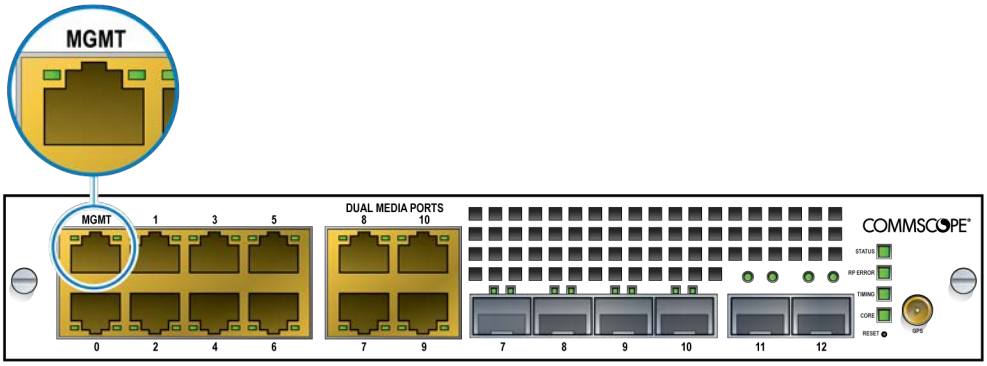

2 Open a supported browser.

3 Enter the IP address for the GUI, using the format below.

https://<IP address of Management Interface>:6002

Example:

`https://192.168.8.1:6002`

The Sign In dialog box appears.

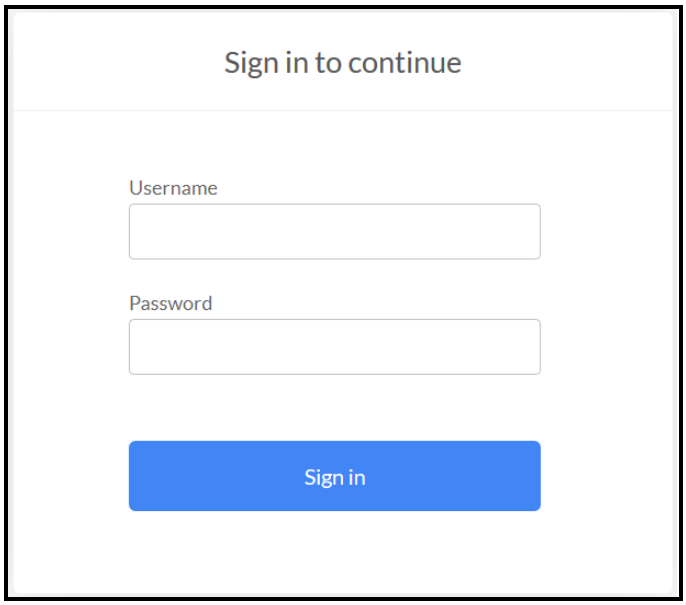

4 Ensure the WebGUI is operating in Management Mode. The Dashboard displays.

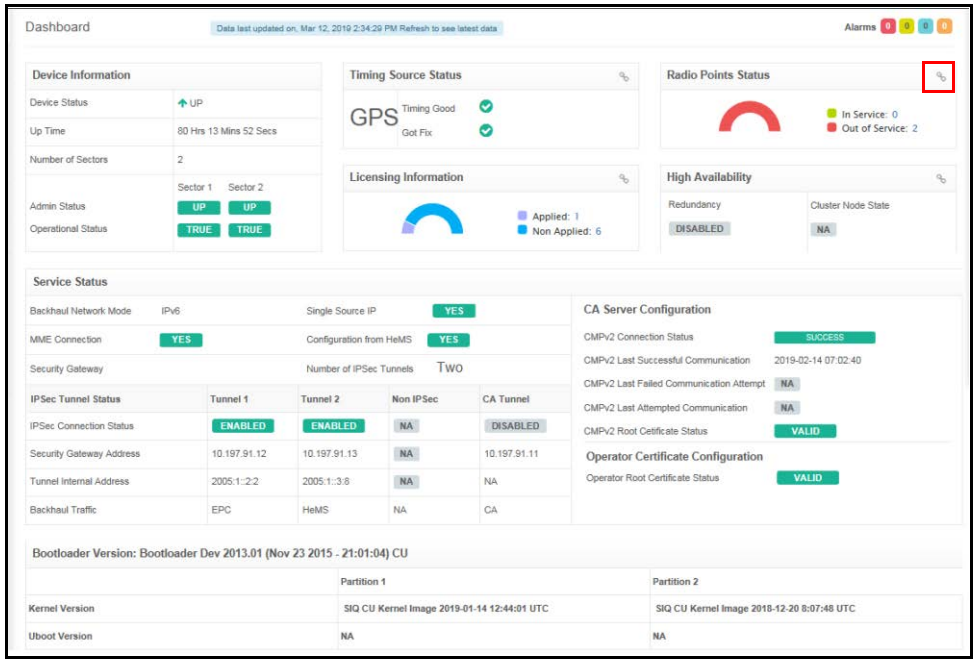

5 On the Dashboard, click the Radio Points link. The Radio Points Dashboard displays.

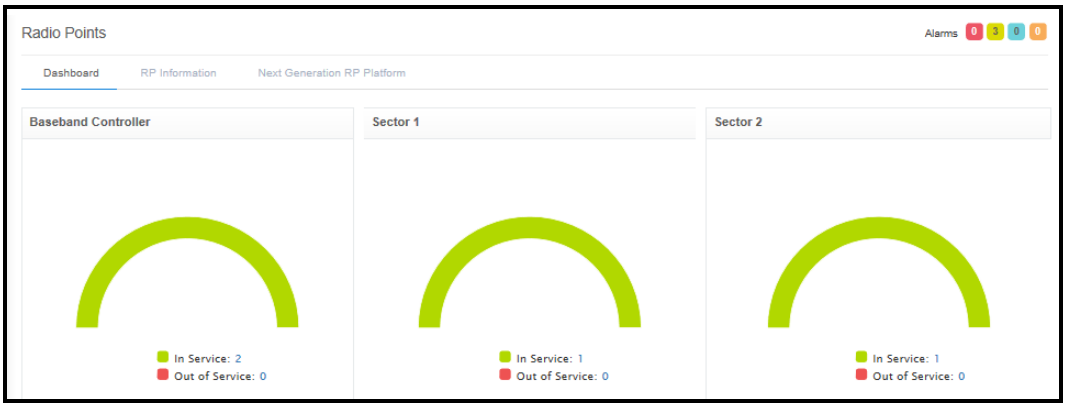

6 Click the RP Information tab. The RP Information page displays.

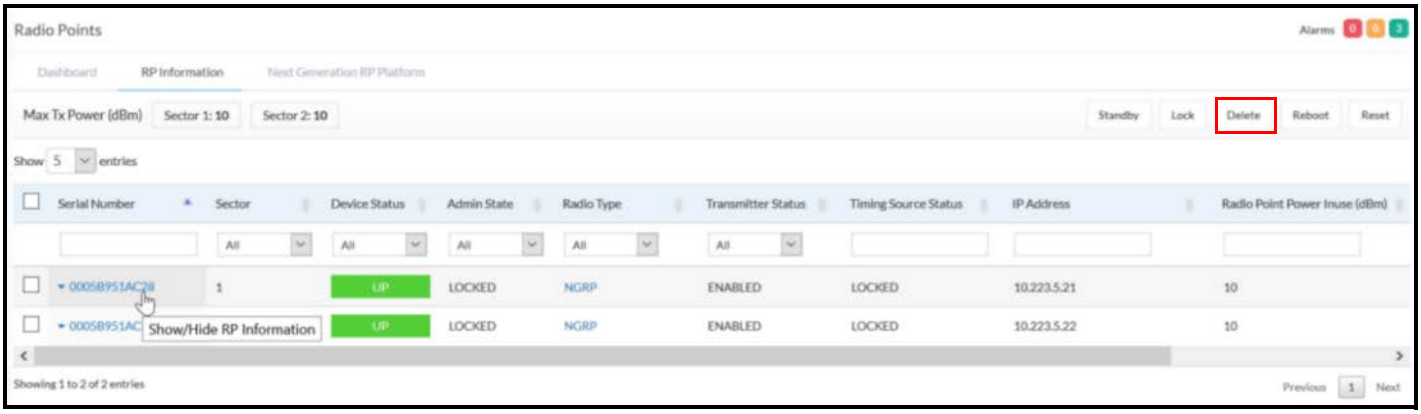

7 Make sure the replaced RP is UP.

Appendix E

Cable installation and power separation guidelines

This section contains best practices for installing Ethernet cables and connecting them to RPs.

Overview	E-2
Cable handling	E-2
Cable termination	E-3
Lightning protection	E-12
Ceiling connector	E-15
Patch panel	E-17
Power separation guidelines	E-17

Overview

When installing Rugged RPs, cables that can withstand temperature extremes and inclement weather should be used. In outside environments, avoid contamination or damage to plugs. Plugs must be protected from sunlight and water in a suitable equipment housing or NEMA 4 rated box. It is also important to avoid exposure to water at cut ends of unfilled cables and cords. The following information is available to help you extend the operation of your RP and switches.

Cable handling

Indoor/outdoor cords can be routed outdoors above ground and indoors, and can be ordered in lengths long enough for direct (home-run) installations from switch to end equipment. Cords have 20% Insertion Loss De-rating so only 85 meters total can be supported. Extended lengths can be cut in two for terminating the indoor ends at protectors or panels. Terminations are similar to typical 4-pair indoor cables.

Unreel long lengths of cable to ensure the cable does not become twisted or caught on objects.

Figure E-1. Unreel cable

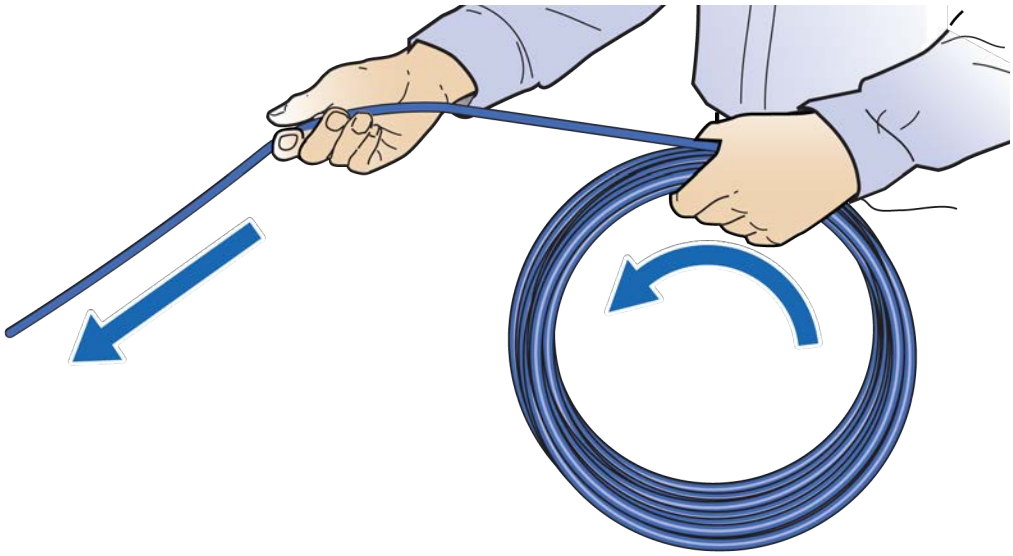

CommScope recommends using a sock fitted and secured over the plug to pull cable through long conduits.

Sock information

Tie wrap information

Figure E-2. Cable with sock attached using tie wrap

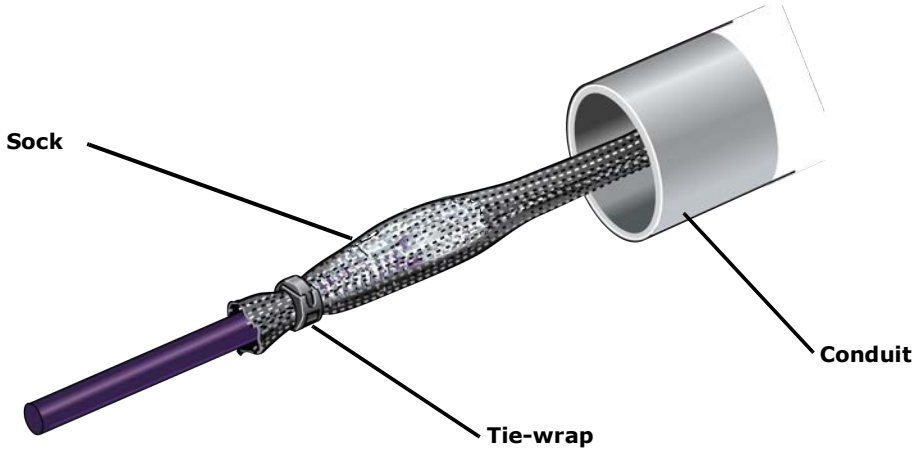

Feed the sock through the conduit and secure the sock on the terminal end of the cable with the tie-wrap. Once the sock and tie-wrap are in place, pull the cable through the conduit.

Cable termination

Before installing the Rugged RP, terminate the RP end of the Ethernet cable with the RJ45, IP67 connector provided in the box.

Figure E-3. RJ45, IP67 connector

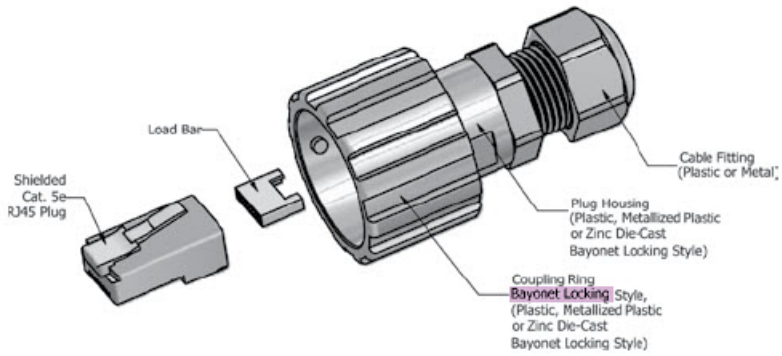

Flip the plug anti-snag to make it easier to push through the cord grips (flip it back before plugging in).

Use the split grommet provided. Once it is in place, coat it with silicone to ensure the connector is sealed.

Figure E-4. Assembling the connector on the RP end

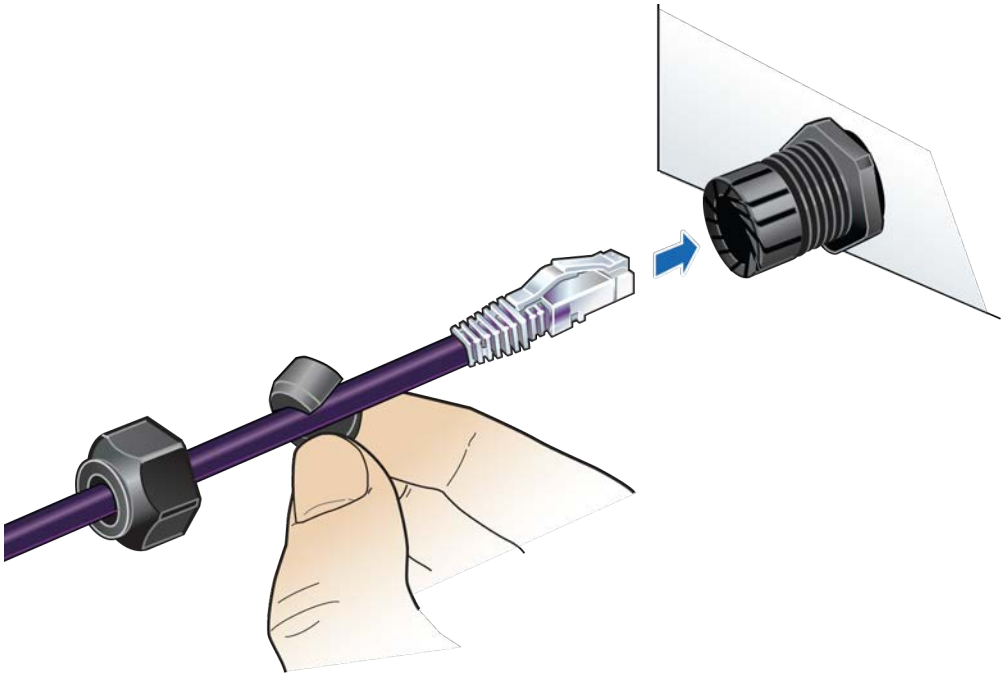

Cable splicing

Some cables are run in one piece from source to destination and have connector terminations. In other cases, two shorter pieces of cable need to be spliced together. When a cable is run to outdoor devices, you should take measures to ensure that cables are properly protected against moisture entering the cable. This is especially important when the jacket is stripped back from the wires.

Some cables are gel filled and the termination includes cleaning the excess gel and blocking the end with silicone sealant to prevent future leakage. A typical blocking method uses a 2 cm length of Alpha Wire PVC-105-2 tubing or equivalent.

1 Fill all space inside the tubing with B-sealant.

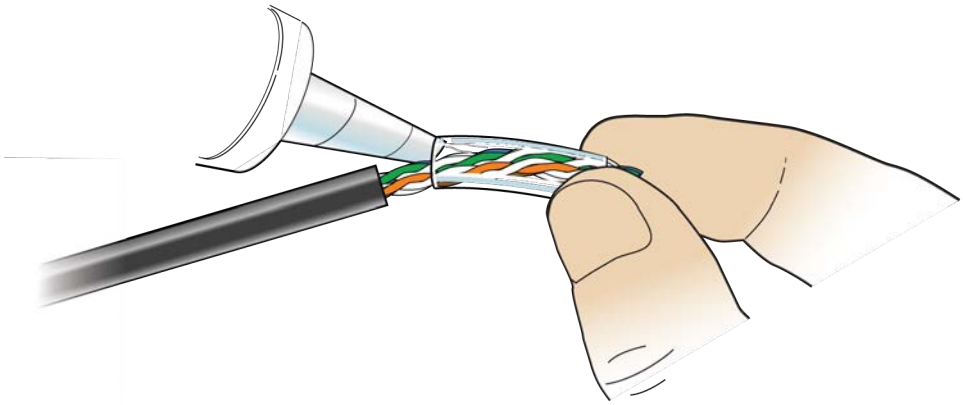

2 Position the filled tube to overlap the end of the inner jacket and seal the gel. Clean off all excess sealant.

NOTE: Tape can be used to stabilize the tube for immediate termination before the sealant sets.

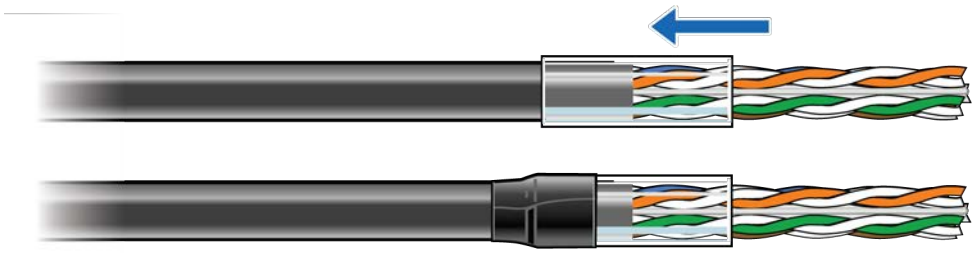

Cable termination

Shielded cables must be properly terminated, either grounded or isolated. For exposed installations requiring protection, the end of the shield can be bonded in various ways. The following procedure is an example of one method.

1 Make a slit along the length of the jacket. Be careful not to tear the underlying shielding.

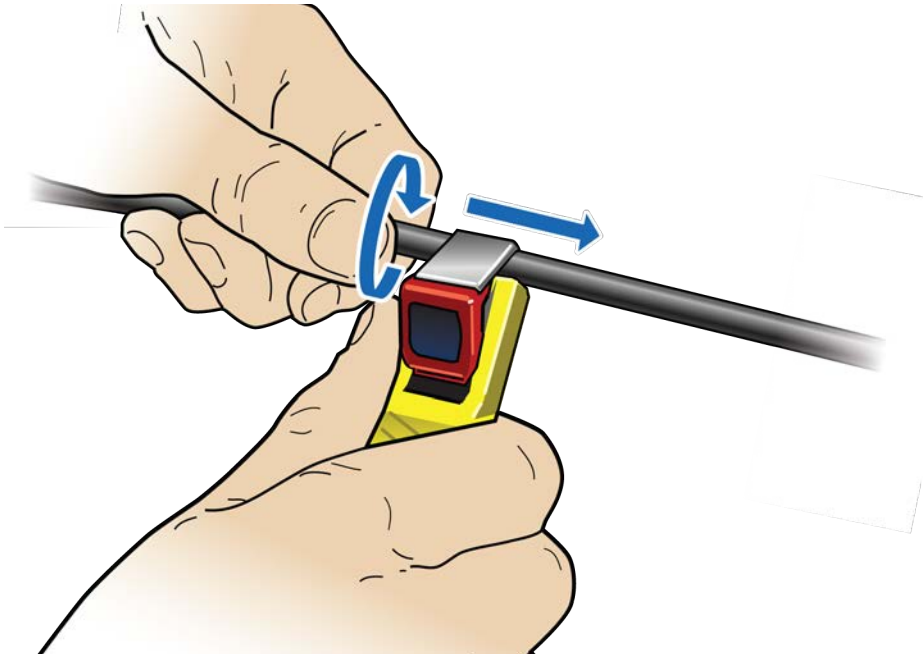

2 Pull back the jacket along the slit and remove.

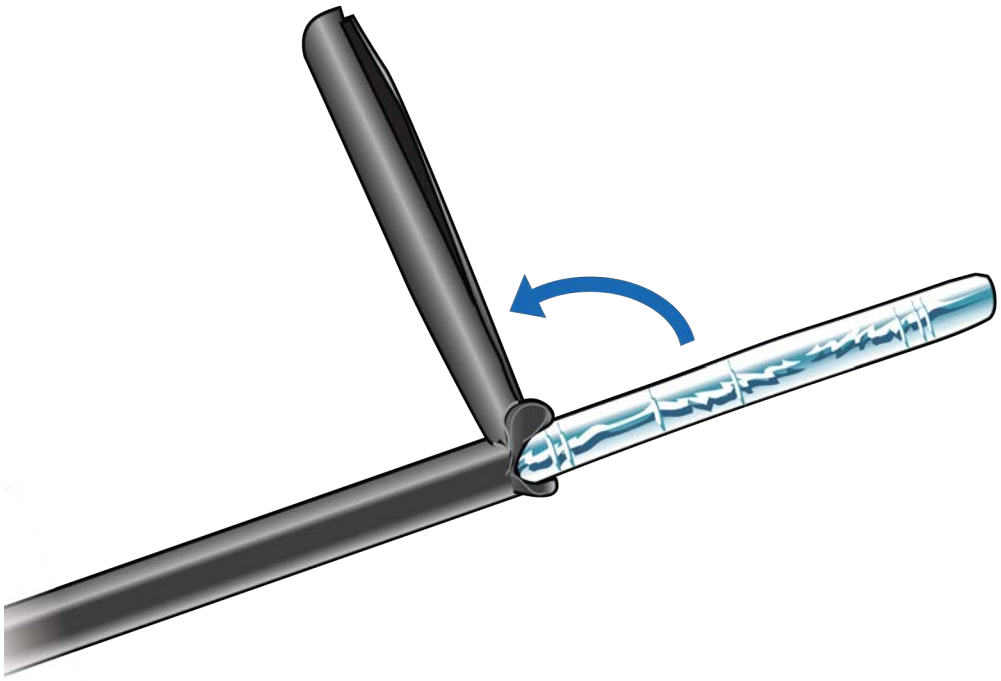

3 Fold back the foil shielding and drain wire to expose the inner jacket.

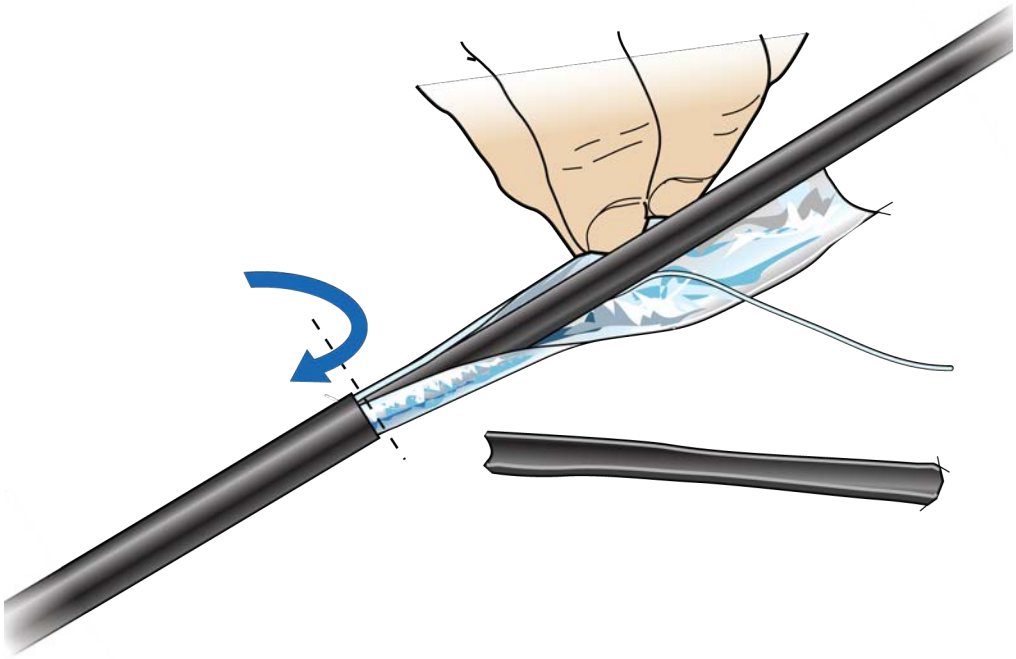

4 Prepare the inner jacket for blocking the gel and direct burial.

- **a** Cut back the inner jacket
- **b** Trim the flute
- **c** Clean the excess gel

NOTE: The flute can be cut longer to match the blocking tube length.

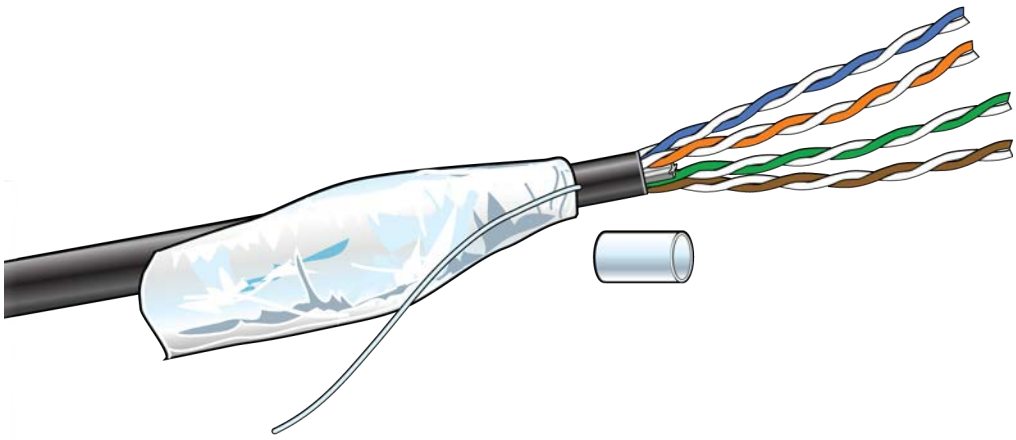

5 Fill all space inside the tubing with B-sealant and position the filled tube to overlap the end of the inner jacket and seal the gel.

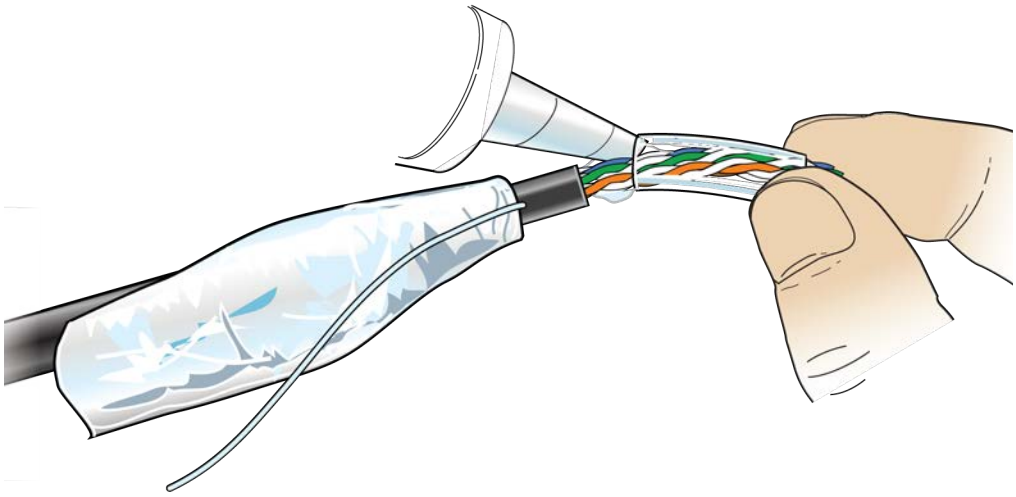

6 Fold the drain wire and foil back over the tube and position the foil to be folded back over the tube.

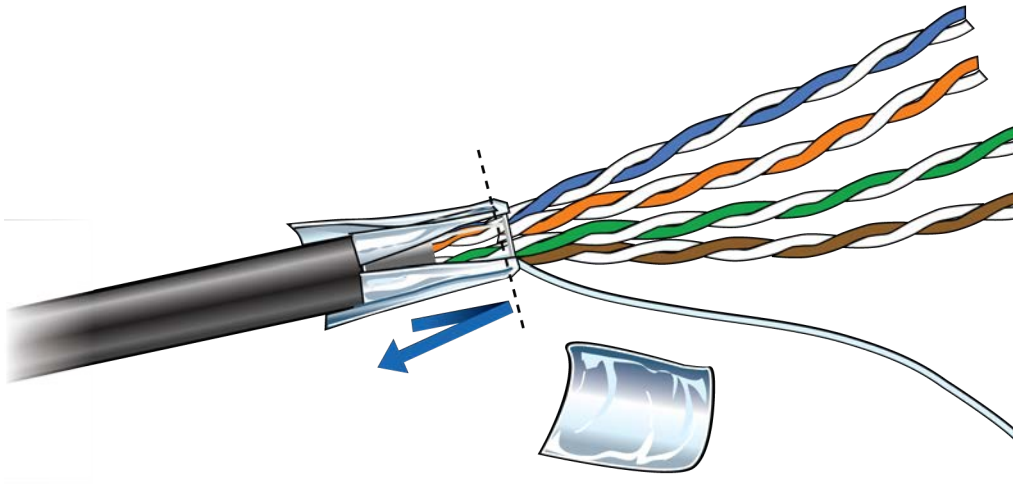

7 An extra piece of foil can be used to cover the foil seam.

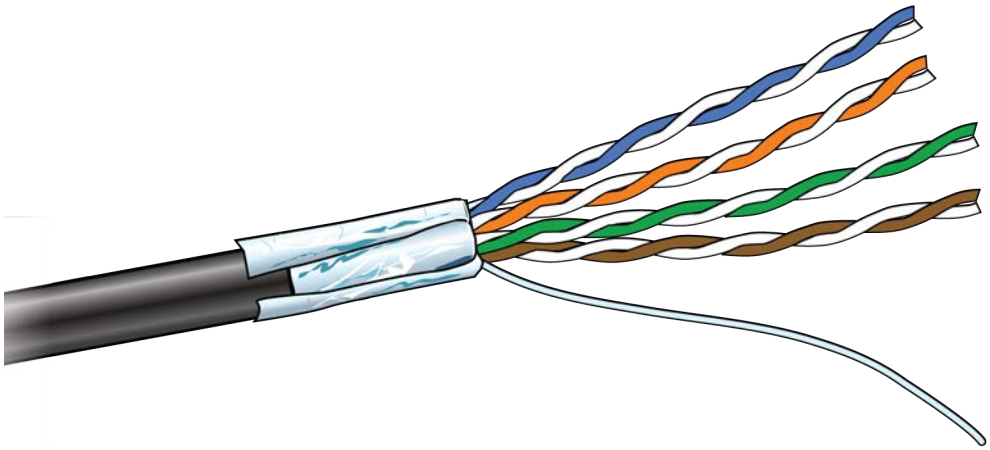

8 For an HGS620 termination, wrap the drain wire at least two times around and position it where the spring clips will capture them.

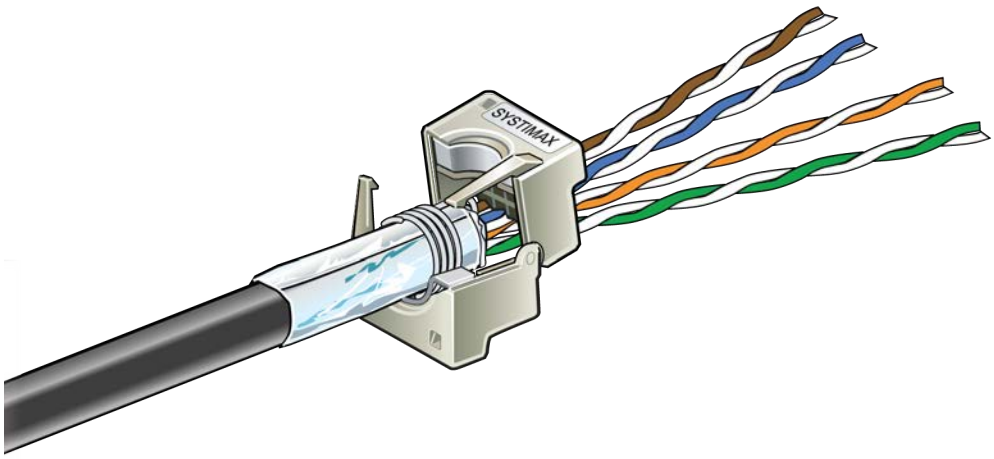

9 Tape over the foil for stability.

10 Trim the wire ends.

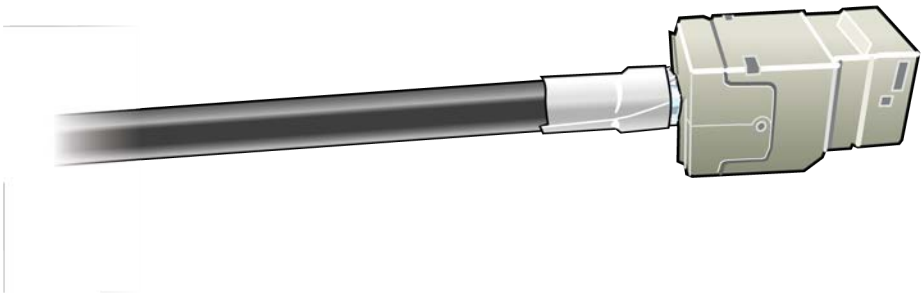

Cable grounding

For CAT-6A cables, the shield termination method is to use the ground lug and B-bond clip that are available in the 12A1 Grounding Kit.

1. Fold the foil back over the jacket end and wrap the drain wire around the end and push the ground lug over the wrap.

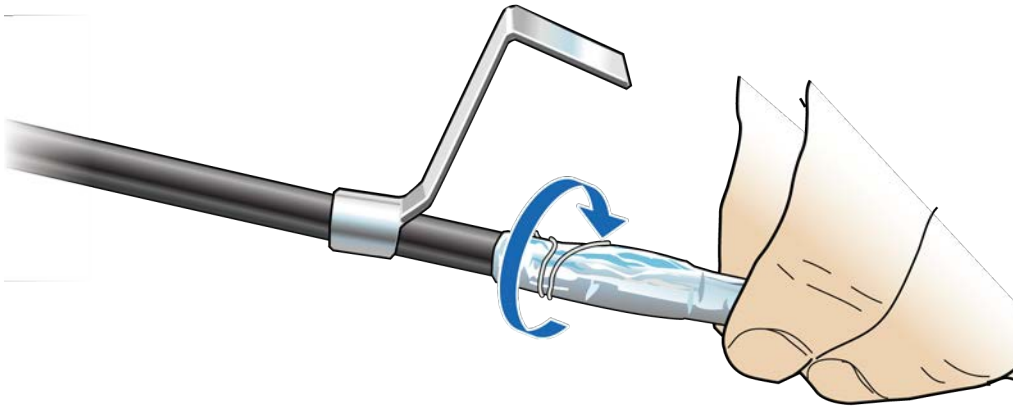

2 Open the B-bonding clip to be placed and closed over the grounding lug.

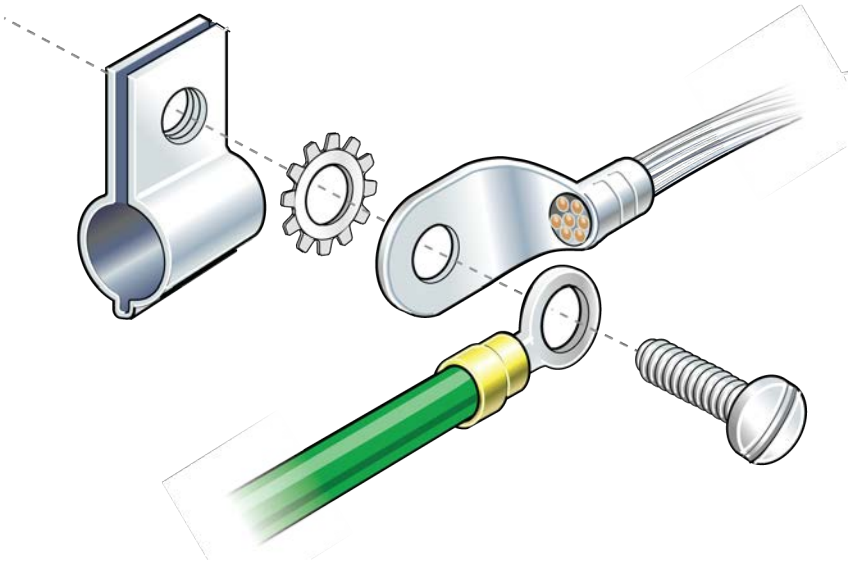

3 The lug tail can be cut off or used for ground attachment.

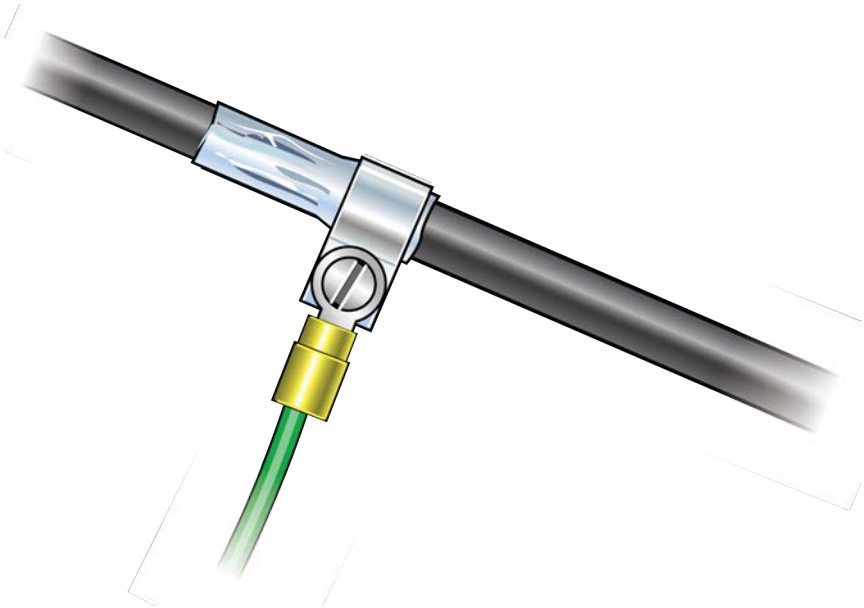

4 Treat the inner jacket as described in step 4 on page E-7.

For an isolated shield termination, the 1572A and 1592A outer jacket foil and drain wire are removed a short distance back from the termination and electrical tape is used to isolate the foil end.

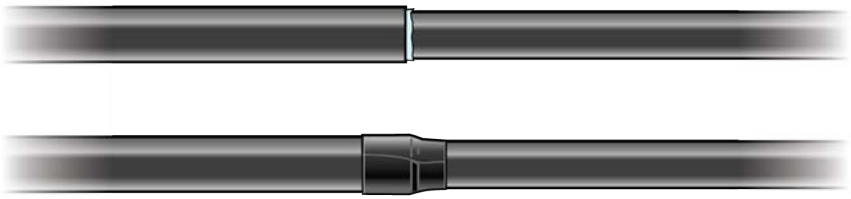

Lightning protection

CommScope recommends including lightning protection in your ONECELL system to isolate equipment from surge damage.

Important guidelines

- Verify hole diameter – blocking may need to remain outside the cover
- Maintain pair twists up to termination points
- Avoid having pairs crossing over each other

Indoor box

To protect the cables in an indoor installation from lightning damage, CommScope recommends using the ITW Linx CAT6-A-LAN protector.

NOTE

The gel filled outdoor cable types will still need blocking. See Cable splicing and Cable termination for instructions on blocking cable.

Figure E-5. CAT6-A lightning protector

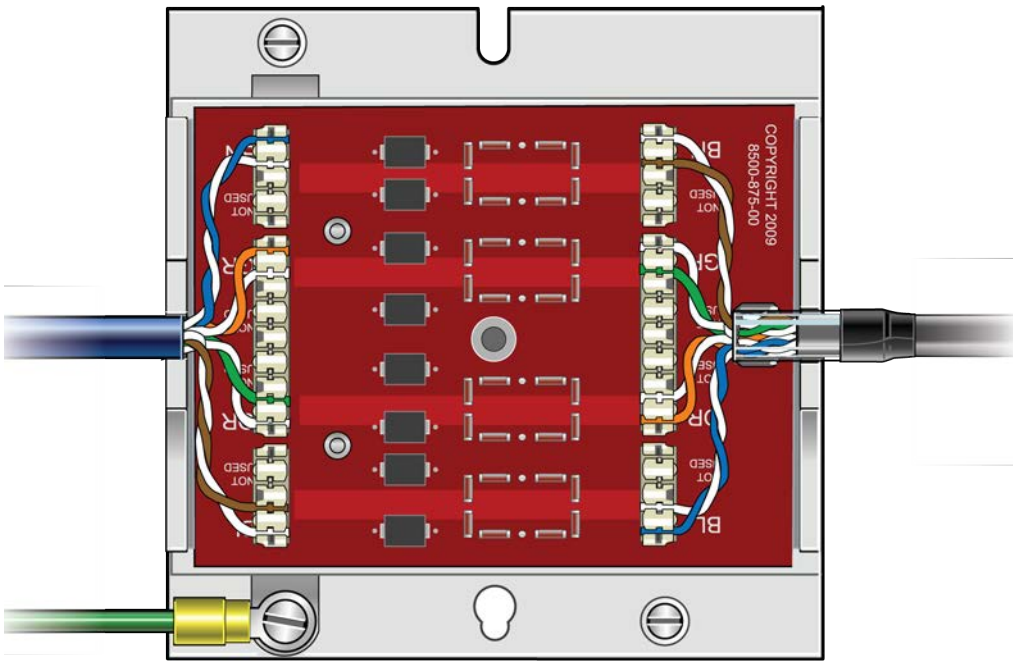

Outdoor protection

The following is an example of a pole mounted CAT-6A configuration for protecting remote equipment installed outdoors.

Table E-1 lists the recommended parts for installing the protection equipment.

Table E-1. CAT-6A protection equipment parts list

Part Name	Link to Part on Distributor's Web site
NEMA 4x enclosure	Allied Moulded fiberglass enclosure
Back panel	Allied Moulded back panel
Ground buss	Ditek surge protection buss
Bottom Mounted Liquid Tight Cordgrips	Heyco pre-assembled cordgrips
Bottom Mounted Liquid Tight Bushing	Heyco liquid tight bushings – snap-in
Protector	Ditek 110RJC6APOE Protector
Pole mount kit	Allied Moulded pole mount kit

Figure E-6. Remote equipment protection for outdoor devices

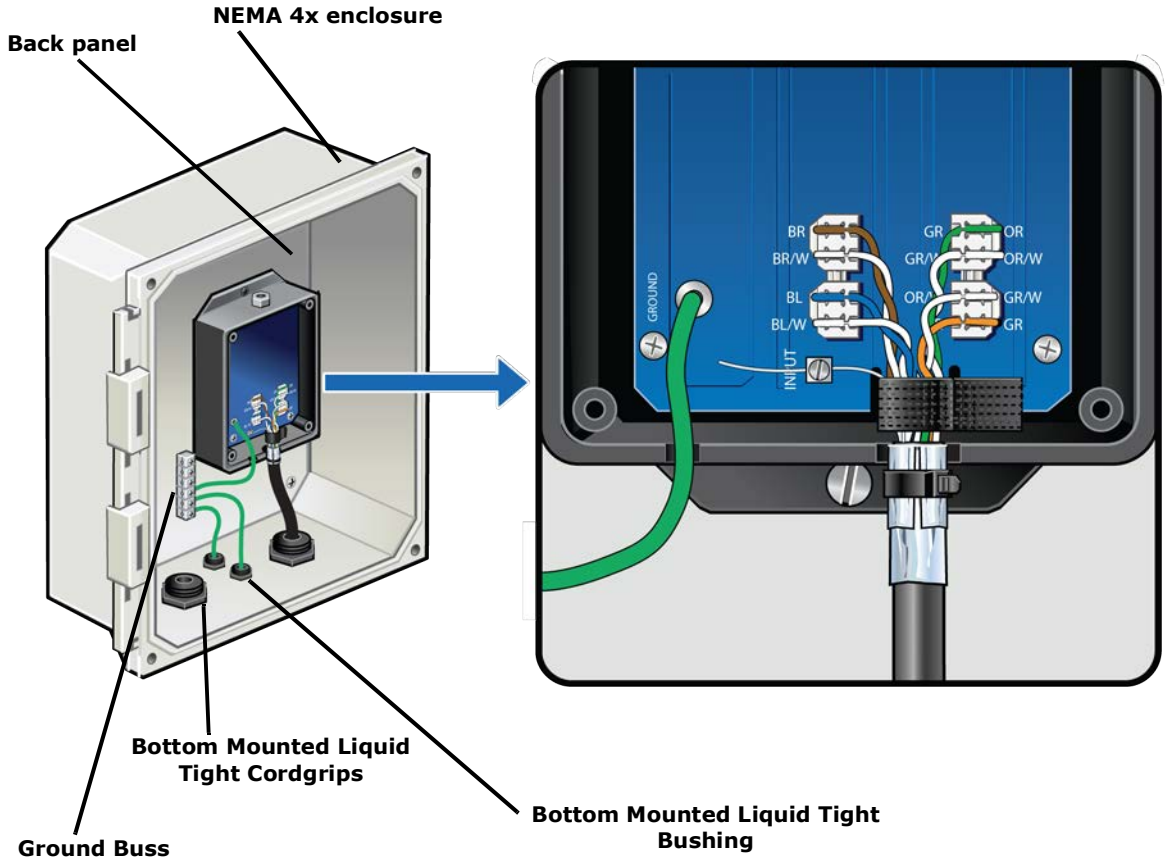

NOTE

Enclosure should be mounted close to the equipment for the best protection.

Figure E-7. Protector box mounted to pole

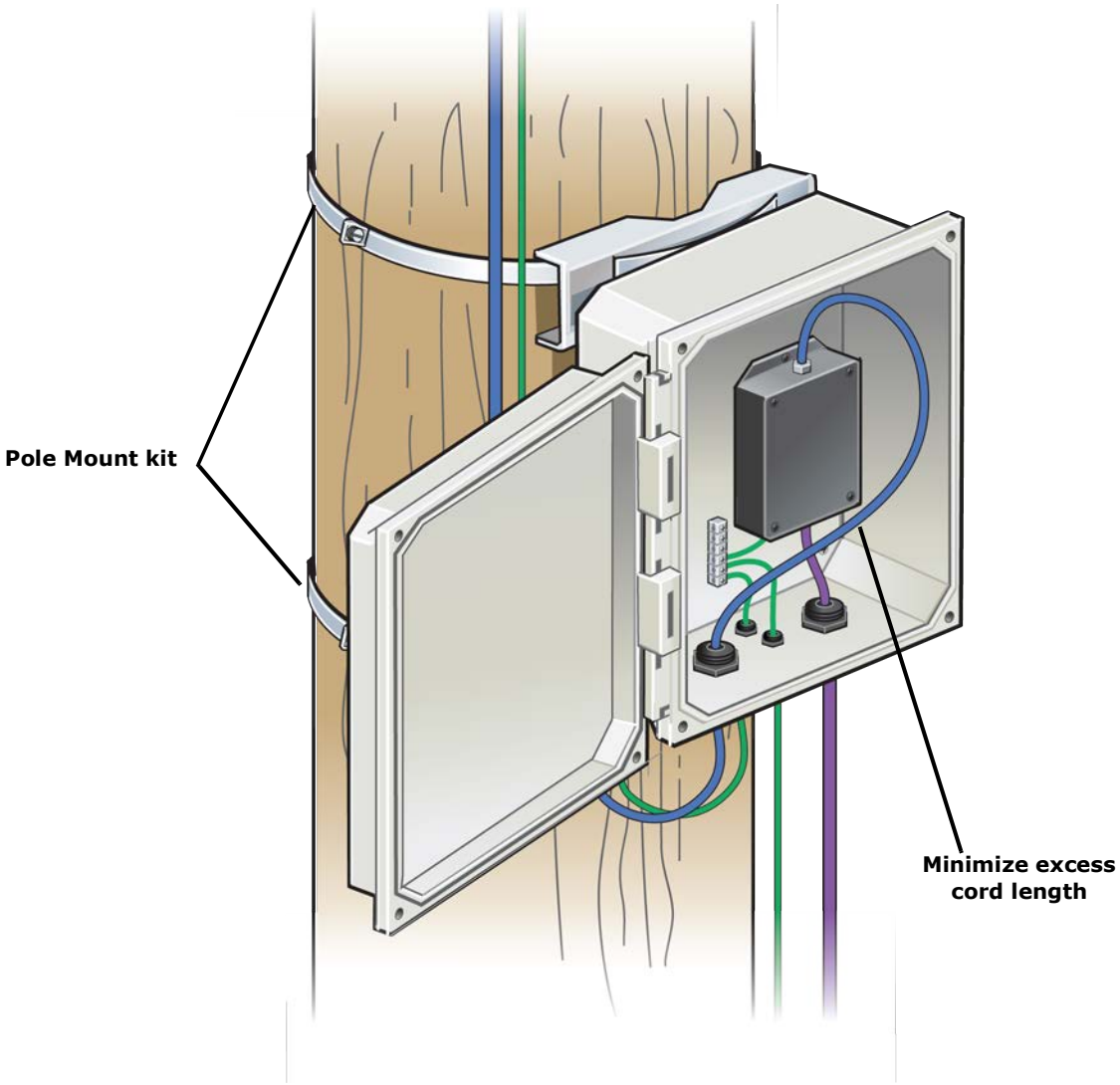

Ceiling connector

If surge protection is not needed, gel flooded cables can be blocked and transitioned to indoor cable using a ceiling connector. The following link is for the recommended CommScope part.

Ceiling connector

1 Terminate the indoor cable first – then lay down a bed of B sealant.

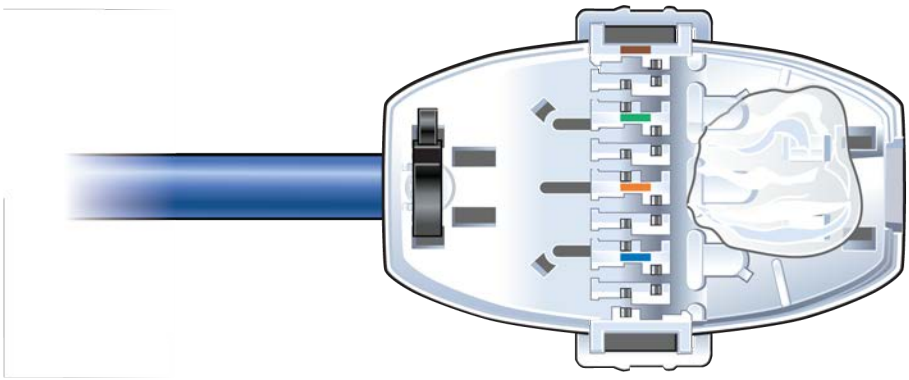

2 Clean all gel from the end of the OSP cable.

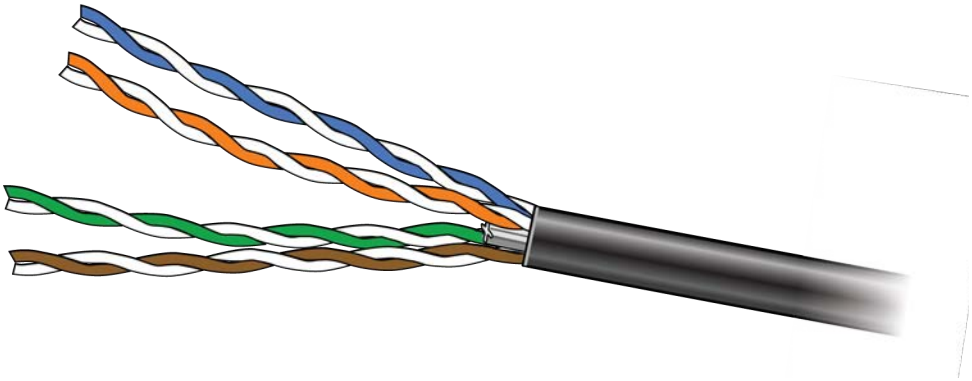

3 After the cable and conductors are positioned, fill the area around the cable end with sealant and close the connector housing.

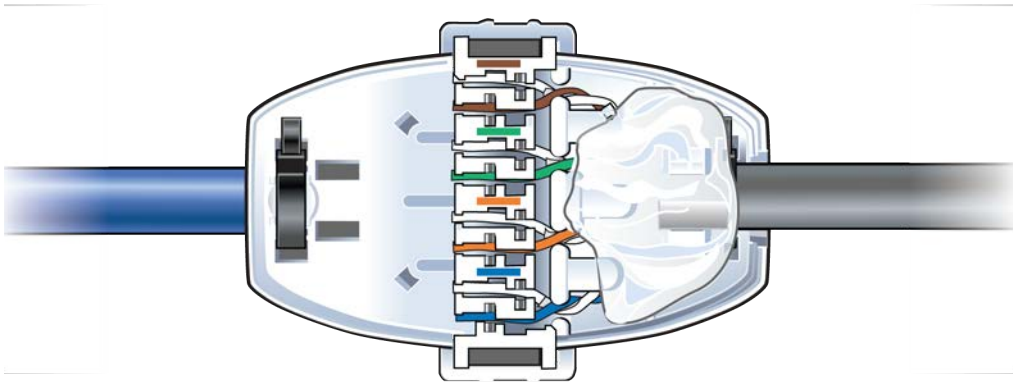

Patch panel

CommScope recommends installing a patch panel in the NOC to connect and manage CAT-6A cables. The following is a list of recommended CommScope 24 and 48 port patch panels and high density information outlets.

- 760163436_HFTP-HD6B-1U-24
- 760163444_HFTP-HD6B-2U-48
- 760163451_HFTPA-HD6B-1U-24
- 760163469_HFTPA-HD6B-2U-48
- 760163519_HFTP-J6
- 760163527_HFTP-J10G

For more information, go to CommScope.com or contact your CommScope customer representative.

Power separation guidelines

For power separation best guidelines, refer to the following standards:

- Telecommunications Pathways and Spaces, TIA-569-C
- Information technology – Implementation and operation of customer premises cabling – Part 2: Planning and installation, ISO/IEC 14763-2
- Information Technology – Cabling Installation – Part 2: Installation Planning and practices inside buildings, BS EN 50174-2

ONECELL® Hardware Installation Guide, Release 6.5
M0305AN, Rev. A Release 6.5 August 2022

COMMSCOPE®