COMMSCOPE®

ONECELL® Hardware Installation Guide
Release 7.01

P/N M0306OE, Rev A
02 June 2023

Copyright Statement

Copyright statement for Small Cell documents.

Copyright © 2023 CommScope, All rights reserved.

THIS DOCUMENT HAS BEEN DEVELOPED BY COMMSCOPE, AND IS INTENDED FOR THE USE OF ITS CUSTOMERS AND CUSTOMER SUPPORT PERSONNEL.

THE SPECIFICATIONS AND INFORMATION REGARDING THE PRODUCTS IN THIS MANUAL ARE SUBJECT TO CHANGE WITHOUT NOTICE. ALL STATEMENTS, INFORMATION, AND RECOMMENDATIONS IN THIS MANUAL ARE BELIEVED TO BE ACCURATE BUT ARE PRESENTED WITHOUT WARRANTY OF ANY KIND, EXPRESS OR IMPLIED. USERS MUST TAKE FULL RESPONSIBILITY FOR THEIR APPLICATION OF ANY PRODUCTS.

THE SOFTWARE LICENSE AND LIMITED WARRANTY FOR THE ACCOMPANYING PRODUCT ARE SET FORTH IN THE INFORMATION PACKET THAT SHIPPED WITH THE PRODUCT AND ARE INCORPORATED HEREIN BY REFERENCE. IF YOU ARE UNABLE TO LOCATE THE SOFTWARE LICENSE OR LIMITED WARRANTY, CONTACT YOUR COMMSCOPE SALES REPRESENTATIVE FOR A COPY.

Contents

Copyright Statement 2

List of figures 7

List of tables 9

Document Revision History 10

About this document 11
- Customer Documents 11
- Conventions 12
- Notes, Cautions, and Warnings 14

Part I: Overview and preparation 15

Chapter 1. CommScope ONECELL® overview 16
- Overview 16
- CommScope ONECELL system 16
- ONECELL hardware components 16
  - Baseband Controller physical ports 17

Chapter 2. Preparing to install the ONECELL system 19
- Overview 19
- Before Installing the ONECELL Components 19
- Commissioning the ONECELL Network 19

Part II: ONECELL component installation 20

Chapter 3. Baseband Controller installation 21
- Overview 21
- Preparing for Baseband Controller Installation 21
- Installing the Baseband Controller into a rack 21

Chapter 4. RP5200i installation 26

RP5200i installation overview 26
Ceiling Mount 26
Wall mount 30
Flown Mount 34
Pole mount 37

Chapter 5. RP5100i installation 41
RP5100i installation overview 41
Ceiling mount 41
Mounting the Radio Point on the Ceiling Tile 42
Mounting the Radio Point above the ceiling tile 46
Flown Mount 50
Flown mount installation 51
Pole Mount 54
Pole mount installation 54

Chapter 6. RP5100r installation 58
Rugged Radio Point installation overview 58
Antenna port label 60
Pole mount installation 60
Vertical pole mount 60
Wall mount installation 63

Chapter 7. RP2000 Installation 66
Indoor Radio Point (RP2000) installation overview 66
Ceiling mount 66
Mounting the Radio Point on the ceiling tile 67
Mounting the Radio Point above the ceiling tile 73
Flown mount 76
Flown mount installation 77
Pole mount 82
Pole mount installation 82

Chapter 8. RP2100 Installation 85
Rugged Radio Point (RP2100) installation overview 85
Pole mount installation 86
Vertical pole mount 86
Horizontal pole mount 90
Wall mount installation 93

Part III: Appendices 96

Appendix A. Safety **97**
Radiation Exposure Statement 97
Human exposure limits for ONECELL deployments 97
Reference documents 102
FCC ID 103
RP5100i and RP5200i series 103
RP2000 series 104

Appendix B. Installation troubleshooting **106**
Overview 106
Baseband Controller LED patterns 106
Radio Point LED patterns 108
RP5100i LED patterns 108
RP5100r LED patterns 111
RP2000 series LED patterns 112

Appendix C. Specifications **113**
Overview 113
Environmental and physical specifications 113
SPF/SPF+ specifications 114

Appendix D. Field Replaceable Units **116**
Overview 116
Replacing Baseband Controller modules 116
Prerequisites 116
Off-site activities 117
On-site activities 121
Post-Install Verification 124
Replacing Radio Points prerequisites and on-site activities 126
Prerequisites 126
On-site activities 126
Replacing RP5200i Radio Points 128
Ceiling Mount 129
Wall mount 132
Flown mount 136
Pole mount 138
Replacing RP5100 series Radio Points 141
Replacing a ceiling RP5100i (above tile) 141
Replacing a ceiling Indoor RP (on tile) 145
Replacing a flown mounted RP5100i 149
Replacing a pole mounted RP5100i 155
Replacing RP5100i/RP5200i RF modules 159

Replacing RP5200i Radio Modules..... 159
Replacing RP5100i Radio Modules..... 160
Replacing RP2000 series Radio Points..... 163
Replacing a ceiling Indoor RP (above tile)..... 163
Replacing a ceiling Indoor RP (on tile)..... 167
Replacing a flown mounted Indoor RP..... 170
Replacing a pole mounted Indoor RP..... 173
Replacing a vertical pole mounted Rugged RP..... 175
Replacing a horizontal pole mounted Rugged RP..... 179
Replacing a wall mounted Rugged RP..... 183
RP post-replacement verification..... 185

Appendix E. Cable installation and power separation guidelines..... 188
Overview..... 188
Cable handling..... 188
Cable termination..... 189
Cable splicing..... 190
Cable termination..... 191
Cable grounding..... 194
Lightning protection..... 195
Important guidelines..... 195
Indoor box..... 196
Outdoor protection..... 196
Ceiling connector..... 198
Patch panel..... 199
Power separation guidelines..... 199

List of figures

Figure 1: ONECELL solution....16
Figure 2: Baseband Controller ports....18
Figure 3: CommScope ceiling mounting kit....27
Figure 4: Drop rail....27
Figure 5: CommScope wall mounting kit....30
Figure 6: CommScope flown mounting kit....34
Figure 7: CommScope ceiling mount kit contents....41
Figure 8: CommScope flown mount kit contents....51
Figure 9: Mounting bracket kit contents....54
Figure 10: Hardware provided by CommScope....58
Figure 11: Hardware provided by the systems integrator....59
Figure 12: RJ45, IP67 connector assembly....60
Figure 13: Antenna port label....60
Figure 14: CommScope ceiling mount kit contents....67
Figure 15: Drop rail, system integrator-provided....67
Figure 16: CommScope supplied kit contents....77
Figure 17: Mounting bracket kit contents....82
Figure 18: RP5200i C-Band Radio Module label....103
Figure 19: RP5100i and RP5200i LTE Radio Module label....104
Figure 20: Unreel cable....188
Figure 21: Cable with sock attached using tie wrap....189
Figure 22: RJ45, IP67 connector....189
Figure 23: Assembling the connector on the RP end....190

Figure 24: CAT6-A lightning protector.....196

Figure 25: Remote equipment protection for outdoor devices..... 197

Figure 26: Protector box mounted to pole..... 198

List of tables

Table 1: Conventions.....12

Table 2: Baseband Controller physical port assignments.....17

Table 3: RF exposure for ONECELL at maximum power internal antennas for RP5100 series.....98

Table 4: RF exposure for ONECELL at maximum power internal antennas for RP5200 series.....99

Table 5: RF exposure for ONECELL at maximum power internal antennas for RP2000 series.....102

Table 6: Environmental and Physical specifications.....113

Table 7: CAT-6A protection equipment parts list.....197

Document Revision History

The following section lists documentation changes in the *ONECELL® Hardware Installation Guide (M0306OE)*.

Revision 7.01 (June 02, 2023)

- TD release.

Revision 7.01 (May 30, 2023)

- Initial draft.

About this document

This document provides the procedures for installing and configuring the Baseband Controller and Radio Points.

Audience

This document is written for computer hardware installers and administrators, network architects, and business planners who are responsible for the planning and design of the CommScope ONECELL deployment environment.

Purpose

This guide provides the information necessary for installing the ONECELL hardware in the operator's network.

What you need to know

The reader should have a basic understanding of:

- Data networks
- LTE technology
- General telecommunications practices

- Customer Documents (page 11)
- Conventions (page 12)
- Notes, Cautions, and Warnings (page 14)

Customer Documents

The following table lists available documents in the ONECELL documentation suite.

Title	Contents
ONECELL® Network Planning Guide, v7.0 (M0306OK)	Describes main components of the ONECELL system; including its hardware components, how to engineer an in-building system and best practices for deployment.
ONECELL® Central Cloud and Central Services Upgrade Guide, v7.0 (M0306OC)	Describes upgrade of Central Cloud and Central Services through DevOps Portal.
ONECELL® Service Management and Orchestration Administration Guide, v7.0 (M0306ON)	Describes administering the Central and Edge Clouds over StarlingX and its components.

Title	Contents
ONECELL® Troubleshooting Systems Guide, v7.0 (M0306OM)	Covers common troubleshooting scenarios in deployed devices and troubleshooting methods.
ONECELL® 5G OM and KPI Reference, v7.0 (M0306OB)	Describes the operational measurements and key performance indicators for ONECELL 5G devices.
ONECELL® 5G Device Alarm Reference, v7.0 (M0306OA)	Includes ONECELL 5G device alarm information.
ONECELL® Feature Guide, v7.0 (M0306OL)	Contains a description of anchor features for the current and previous releases, and a system overview; including CommScope- and vendor-provided components.
ONECELL® LTE Administration v7.0 (M0306OH)	Describes how to operate, maintain, and manage ONECELL LTE devices using the Baseband Controller's Web UI.
ONECELL® LTE OM and KPI Reference v7.0 (M0306OJ)	Describes the operational measurements and key performance indicators for ONECELL LTE devices.
ONECELL® LTE Device Alarm Reference v7.0 (M0306OI)	Includes ONECELL LTE device alarm information.
ONECELL® Hardware Installation Guide v7.0 (M0306OE)	Describes procedures for installing and configuring the Baseband Controller and Radio Points.

Conventions

This guide uses the following text conventions, as applicable.

TABLE 1: Conventions

Convention	Description
Syntax Symbols	
< >	Enclose a required parameter or set of parameters. For example: >band-class <class> <class> is a required parameter
[ ]	Enclose an optional parameter or set of parameters. For example: >activate image <version> [reboot] [reboot] is an optional parameter.
|	Separates items on a list of parameters, only one of which can be used. For example: >channel-included <yes|no> A valid command is: >channel-included yes
Font Usage	

TABLE 1: Conventions (continued)

Convention	Description
`Bold Input Font`	Indicates text that must be entered exactly as shown. For example: Enter **`ping 192.23.10.12`** .
`Italic input font`	Indicates a variable parameter for which you must provide an actual value. For example: **`>authentication key <aukey>`** ***`<aukey>`*** is a variable parameter. A valid command is: **`>authentication key 9782503000`**
`Plain output font`	Indicates system output in a command line or system-generated file. For example: `IP address 192.23.10.12 is alive.`
`Italic output font`	Indicates a variable in system output in a command line or system-generated file. For example: `Installation of release <release> is complete.`
Plain italic font	Indicates file names, directory paths, book titles, chaptertitles, and user accounts.
Bold font	Indicates text that appears on screen exactly as shown, for example, names of screens, names of buttons, items on menus, and items on pull down lists.
Blue Text	Indicates a hypertext link.
Other conventions	
>	Indicates graphical user interface (GUI) menu path. For example: Select **Edit > Add Network** to open the Add Network screen.

Notes, Cautions, and Warnings

Note: Notes provide additional information about the subject text.

CAUTION: Cautions indicate that procedures, if performed incorrectly, can cause equipment damage or data loss.

WARNING: Warnings indicate that procedures, if performed incorrectly, can harm you.

Part I: Overview and preparation

CommScope ONECELL® overview

Overview

This chapter contains a high level overview of the ONECELL deployment and the ONECELL components installed in the ONECELL system.

ONECELL is a revolutionary wireless system that can deliver the ultimate in wireless performance.

- It eliminates cell borders and handovers
- It can cover a large area with consistent user experience without any significant interference
- It can take advantage of multiple distributed radio points to deliver a stronger signal on both the downlink and the uplink
- It can deliver greater capacity through distributed (multi-user and single-user) MIMO and Coordinated Multipoint (CoMP)
- It has the flexibility to neutralize macro interference in co-channel small cell deployments
- It can be used to deliver unprecedented levels of capacity to hot spot areas by deploying radio points with overlapping coverage and enabling multi- user MIMO

In addition to these important benefits in user experience and data capacity, ONECELL provides superior economics and investment protection, ease of deployment and support for multi-operator deployments.

CommScope ONECELL system

ONECELL is an in-building, enterprise solution for LTE that provides an in-building consistent signal. It operates as a wireless network with a single cell, called a Baseband Controller, over distributed Radio Points. Network operators benefit from the ONECELL because they reduce the load on their infrastructure.

FIGURE 1: ONECELL solution

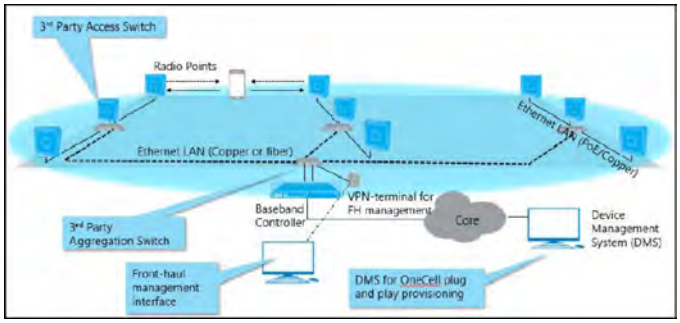

ONECELL hardware components

The ONECELL hardware consists of the following components:

- Baseband Controller
  - Baseband Controller Chassis
  - Baseband Controller Module
  - Power/Fan Unit (PFU)

Baseband Controller physical ports

The following ports are on the front panel of the Baseband Controller Module. Baseband Controller physical port assignments table shows the port assignments. In addition, there is a connector used for the GPS antenna cable.

Note: For more detailed BC port information, see *ONECELL® Network Planning Guide, v7.0 (M0306OK)*.

TABLE 2: Baseband Controller physical port assignments

Port Assignment	Network	Port Speed	Media Type	Description
MGMT	Local Management	1 Gbps	RJ45	**External Interface** to access the WebGUI on the Baseband Controller.
0	Not used	1 Gbps	RJ45	Not used
1-6	IQ Data	1 Gbps	RJ45	**Fronthaul IQ Data Traffic** between the Baseband Controller and Radio Points via an Ethernet switch on copper (RJ45) port.
7	Boundary Clock	1 Gbps	Dual Media RJ45 or SFP	**Boundary Clock Input** of IEEE 1588 PTP Timing signal via dual media port.
8	IPsec	1 Gbps	Dual Media RJ45 or SFP	**Backhaul Traffic** (S1 and OAM Interfaces) via dual media port. VLAN tags are configurable in Dual IPsec mode to separate different traffic streams on the same port.

TABLE 2: Baseband Controller physical port assignments (continued)

Port Assignment	Network	Port Speed	Media Type	Description
9	X2 and Redundancy	1 Gbps	Dual Media RJ45 or SFP	**Fronthaul Traffic** for X2 and Redundancy Cluster data via dual media port.
10	RP Management and Timing	1 Gbps	Dual Media RJ45 or SFP	**Fronthaul Traffic** for IEEE 1588 PTP timing and SOAP/XML control data via dual media port. Timing and OAM data traffic between Baseband Controller and Radio Points through an Ethernet switch(s)
11	IQ Data	10 Gbps	SFP+	**Fronthaul IQ Data Traffic** between the Baseband Controller and Radio Points via Ethernet switch on Fiber (SFP) port.
12	Not used	10 Gbps	SFP+	Not used

FIGURE 2: Baseband Controller ports

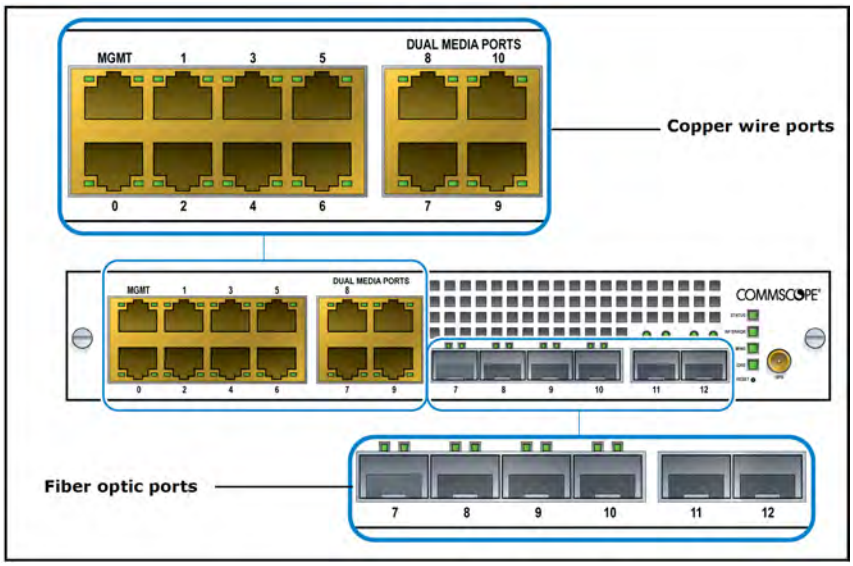

Chapter 2

Preparing to install the ONECELL system

Overview

This section has the steps to complete before starting the ONECELL installation.

This document describes the ONECELL installation and includes:

- Baseband Controller installation
- RP5100i installation
- RP5100r installation
- RP2000 Installation
- RP2100 Installation

Before Installing the ONECELL Components

Before installing the ONECELL components, the system integrator must plan the network for the topology that will be deployed. See *ONECELL® Network Planning Guide, v7.0 (M0306OK)* .

CommScope recommends that cables and switches be in place before installing the ONECELL components. See Appendix E, Cable installation and power separation guidelines for more information.

Commissioning the ONECELL Network

To bring your ONECELL system up, you'll need to commission the system by configuring it. The commissioning procedures are dependent on the site installation. Contact your CommScope representative for your commissioning procedures.

Part II: ONECELL component installation

Chapter 3

Baseband Controller installation

Overview

This chapter contains the Baseband Controller installation procedures, including chassis installation into a rack, Baseband Controller Module and Power/Fan Unit installation into the Baseband Controller Chassis and the cables required for a basic installation.

Preparing for Baseband Controller Installation

Open the shipping box. It should have the components for one complete Baseband Controller Module:

- Baseband Controller Chassis – including four mounting screws
- Baseband Controller Module
- Power/Fan Unit (PFU)

The Baseband Controller is 1U high. Be sure there is enough room for the Baseband Controller in the rack.

Note: If you are installing a ONECELL system with GPS timing, you will need a coaxial cable with an SMA-type male connector to the Baseband Controller. For information on RF gain requirements, see *ONECELL® Network Planning Guide, v7.0 (M0306OK)*.

Installing the Baseband Controller into a rack

The Baseband Controller can be installed in a 19-inch or 600mm rack. The Baseband Controller Chassis package contains two kits: one with 19-inch brackets and one with 600mm brackets.

CAUTION: The Baseband Controller, when mounted, must be in the horizontal position. No other orientations are allowed.

CAUTION: Grounding:

- If new equipment has grounding lugs, connect to rack ground bar or C-Tap to ground drop cable.
- When installing all equipment to the supporting rack, you MUST install the designated external star washers (#12) between the equipment chassis and the rack to ensure metal to metal contact and confirm the equipment is grounded to the rack. See the figure under Step step 5 .

Surge Protection: When installing the Baseband Controller into a rack, you MUST ensure that the following Surge Protection is also installed in between the power source and system rack power.

Specifications:

- Tripp-lite ISOBAR12ULTRA is a 12-Outlet Network Server Surge Protector, 3840 Joules, with Diagnostic LEDs, and is 1U Rackmount to support up to 15A
- The Tripp-lite IBAR12-20ULTRA is a 12-Outlet Network Server Surge Protector, 3840 Joules, with Diagnostic LEDs, and is 1U Rackmount to support up to 20A

hese surge protector panels must be well grounded.

Note: The chassis requires four screws to secure it into the rack.

1. Select the 19-inch or 600mm bracket kit according to the size of the rack. Attach the brackets to the Baseband Controller Chassis

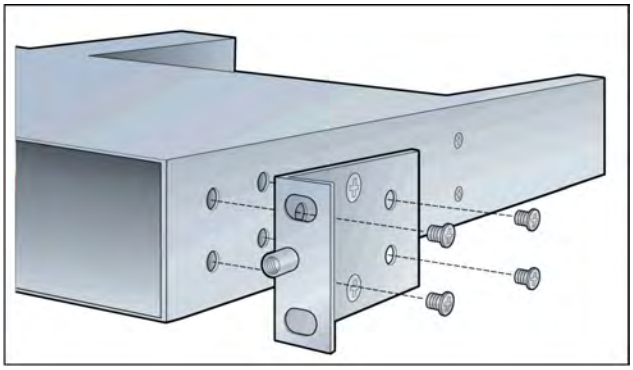

2. Insert the four screws into the chassis bracket holes.
3. Place a external star washer (#12) on each of the four screws and against the chassis bracket.
4. Slide the chassis into the rack
5. Secure the chassis with the screws.

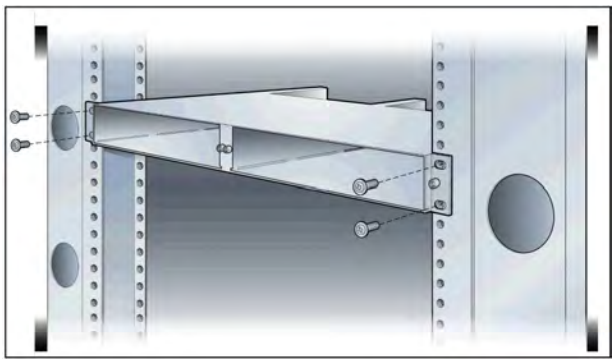

6. Carefully slide the BC into the front of the chassis.

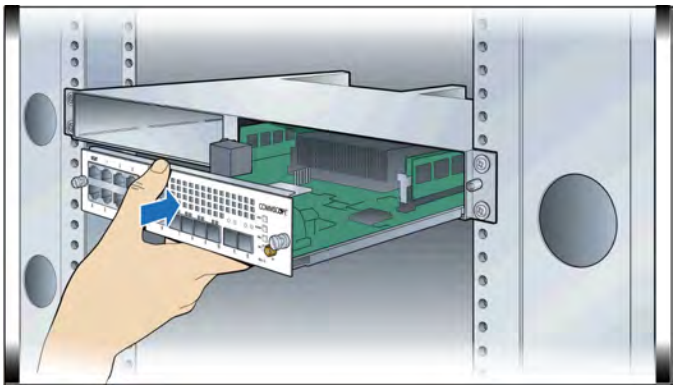

7. Secure the BC by tightening the front panel screws.

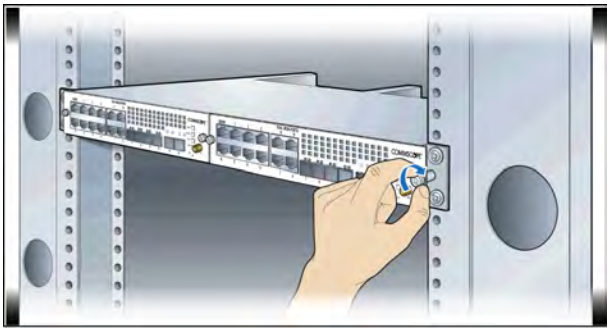

8. In the back of the rack, carefully slide the PFU into the back of the chassis.

CAUTION: The PFU has a fan hazard. A label is affixed to the top of the PFU indicating the hazard.

Note: The connectors on the PFU should fit easily into the connector on the BC. DO not force the PFU into the chassis.

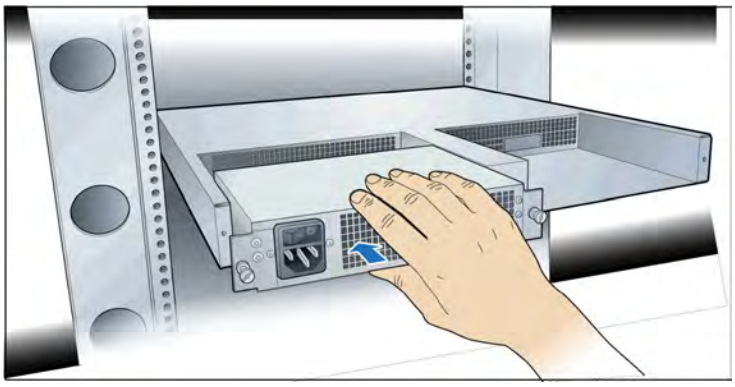

9. Secure the PFU by tightening the thumb screws.

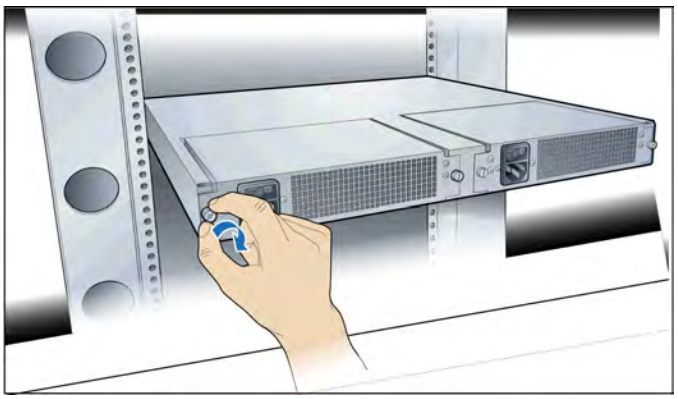

10. Connect the power cord to the PFU.

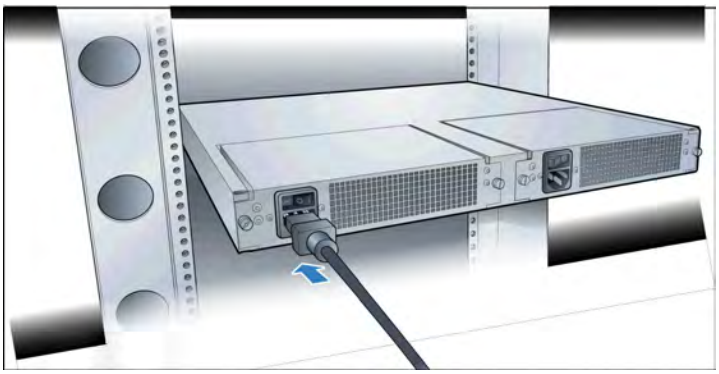

11. On the Baseband Contorller Module's front panel, connect the GPS antenna cable.

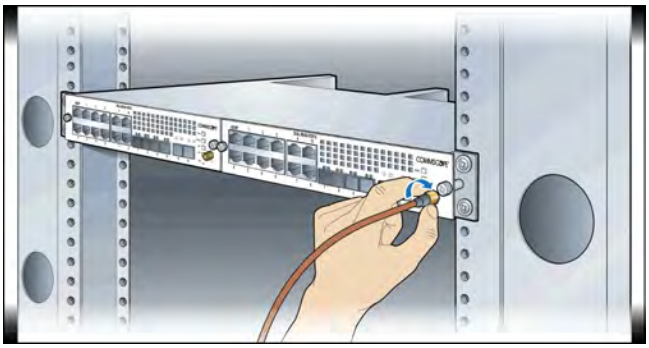

12. Connect the Ethernet or fiber optic cable to the appropriate port.

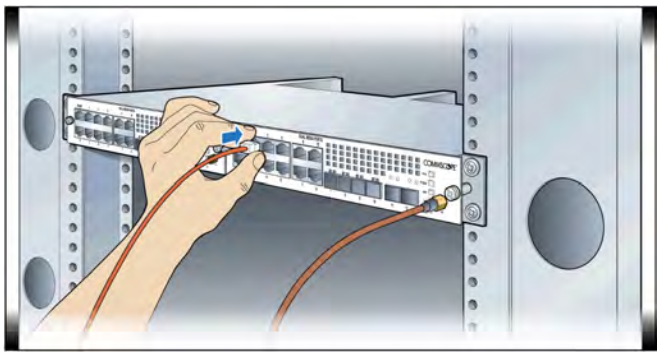

13. On the back of the Baseband Controller, turn on the power.

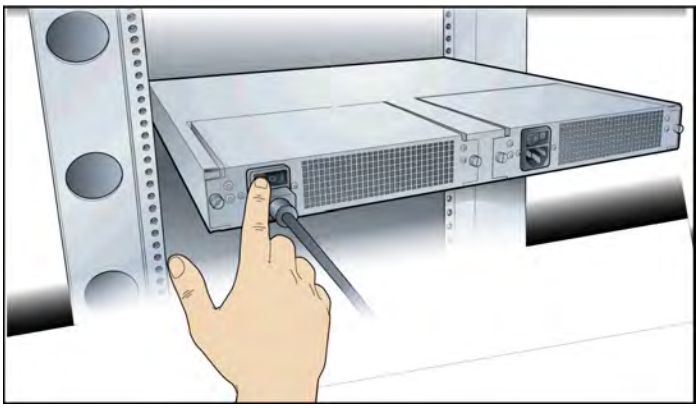

The LEDS on the front panel will be solid green, when the power is on. If none are on, check your power connection. If the LED pattern is other than all green, see Baseband Controller LED patterns.

RP5200i installation

RP5200i installation overview

This chapter describes installing RP5200i Radio Points on ceiling tiles, above ceiling tiles, on poles and in a flown configuration.

The RP5200i is a Radio Point for indoor ONECELL solutions.

Note: Once the Radio Point is installed and powered on, it may take up to 20 minutes for the frequency to stabilize and lock.

Note: The PRIMARY port is the data and power connection; the SECONDARY port is for power only. For more information, see *ONECELL® Network Planning Guide, v7.0 (M0306OK)*.

The RP5200i mounting options are:

- Ceiling mount
- Wall mount
- Flown mount
- Pole mount

Ceiling Mount

Mounting the Radio Point (RP) above or on the ceiling tile requires the following hardware provided by CommScope, shown in the figure below.

1	4" octagon box, 1-1/2" deep with 1/2" side cutouts
2	RP plate and 4 screws
3	Mounting plate and 2 screws
4	1 Red and 1 Blue RJ45 jacks
5	1 Red Primary cable and 1 Blue secondary cable
6	Drop rail, clamp and 2 screws

FIGURE 3: CommScope ceiling mounting kit

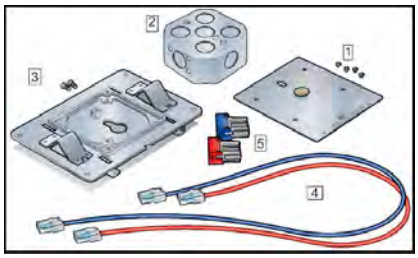

FIGURE 4: Drop rail

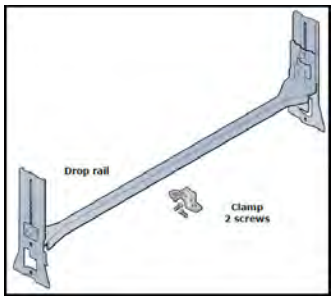

Mounting the Radio Point on the ceiling tile

1. Remove two ceiling tiles from the overhead.

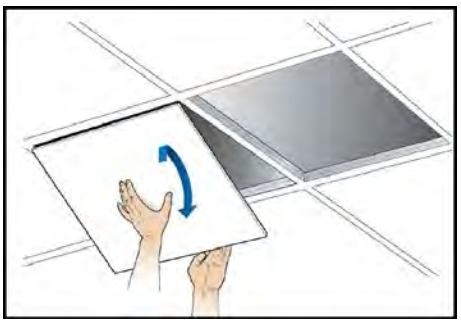

2. Place the RP plate on the tile and mark the four holes on the tile.
3. Cut the opening according to the dimensions in the following drawing.

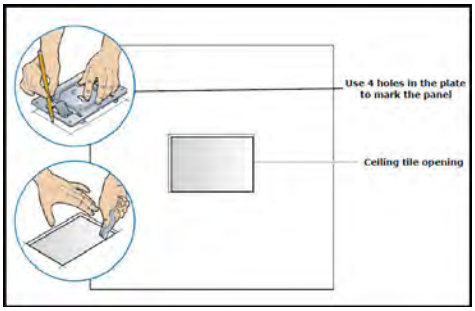

4. Attach the octagon box to the ceiling bracket using a clamp and screw.

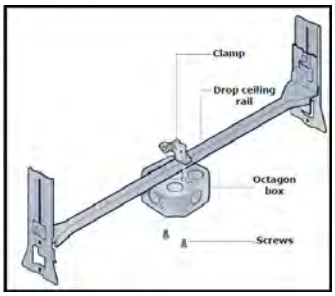

5. Replace the ceiling tile with the cutout.
6. Install the drop rail/octagon box assembly over the modified tile.

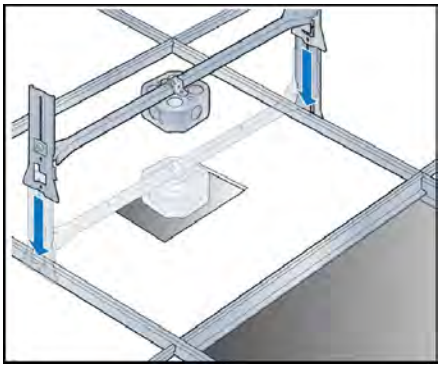

7. Attach the mounting plate onto the octagon box on the RP side of the tile.
8. Insert the Red and Blue cable from the ceiling to the mounting plate as shown.

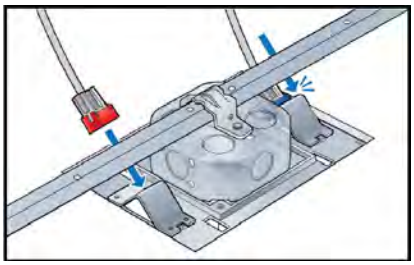

9. Attach RP plate to the Radio Point.

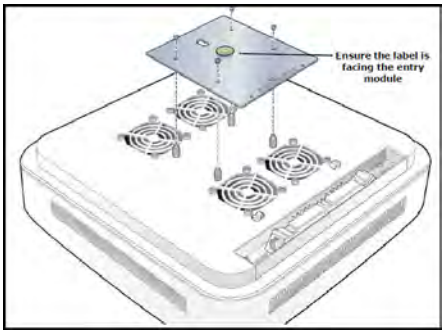

10. Connect the Red Primary and Blue Secondary Ethernet cables to the RP corresponding ports, as shown below.

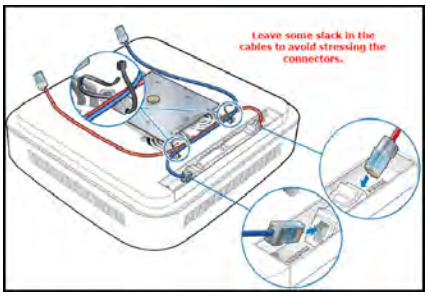

11. Connect the Blue and Red Ethernet cables from the RP to the corresponding connectors on the mounting plate.

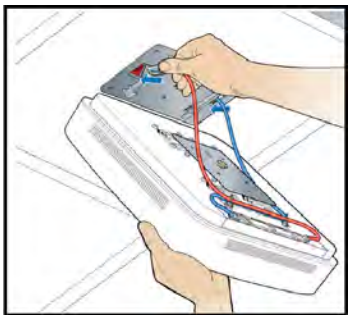

12. Attach the RP to the mounting plate.
    a. Align the keyhole opening on the mounting plate with the button on the RP mounting plate.
    b. Insert the RP into the mounting plate slot and slide until the RP plate meets the tabs on the octagon box plate.
    c. Lift the RP vertically and slide it into the locked position.

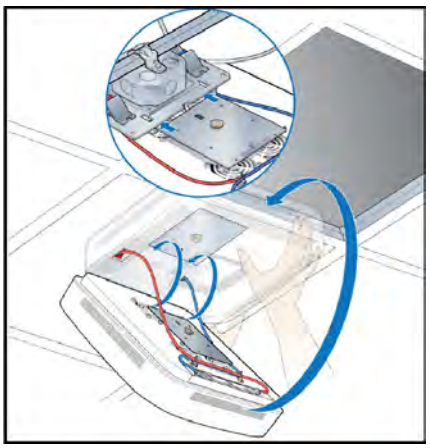

13. Replace the ceiling tile next to the Radio Point.

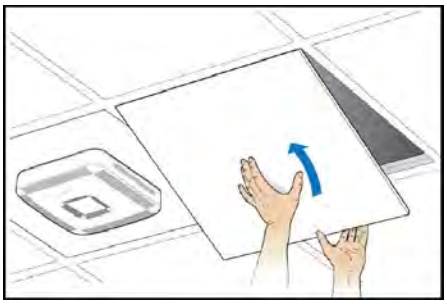

Wall mount

Mounting the Radio Point (RP) on the wall requires the following hardware provided by CommScope, as shown in Figure below.

- Radio Point (RP) plate and screws
- U-bracket
- Mounting plate and screws
- Red Primary port cable
- Blue Secondary port cable
- Red RJ45 jack
- Blue RJ45 jack

Note: In addition to the parts provide by CommScope, the wall mounting option requires four wall anchors, provided by the installer. Follow local building codes for anchor installation guidelines.

1	Mounting plate and 4 screws
2	U-bracket
3	RP plate and 2 screws
4	1 Red and 1 Blue RJ45 jacks
5	1 Red Primary cable and 1 Blue secondary cable

FIGURE 5: CommScope wall mounting kit

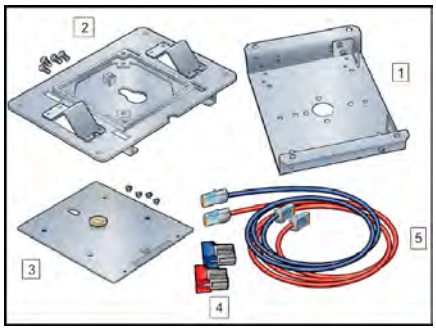

Mounting the Radio Point on the wall

1. Remove the two tabs from the mounting plate.

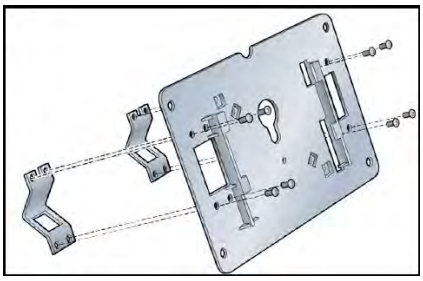

2. Use the U-bracket to trace the holes on the wall in the area you will be installing the RP.

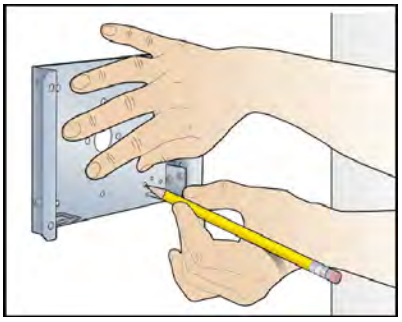

3. Drill the holes and insert the wall anchors (provided by the installer).

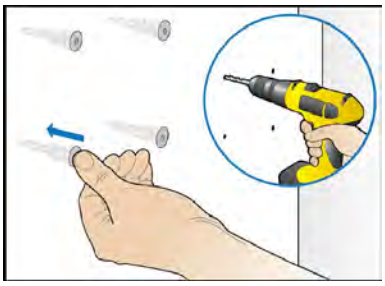

4. Attach the U-bracket to the wall with the four screws provided in the wall mount kit.

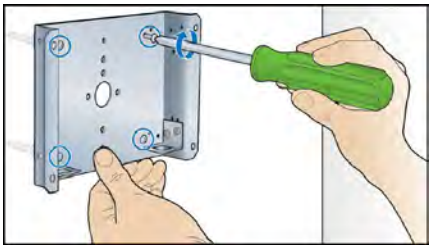

5. Feed the Red and Blue cables from the ceiling and snap them into the L-brackets on the U-bracket. Then attach them to the corresponding cables to the corresponding Red and Blue RP cables provided in the kit.

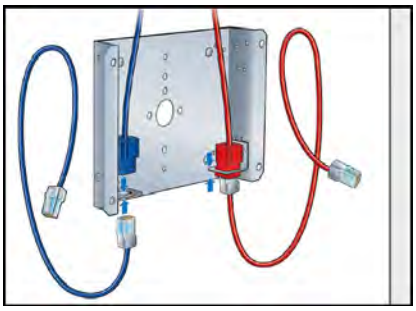

6. Feed the Red and Blue cables around the outside of the U-Bracket and tie-wrap the cables, as shown below.

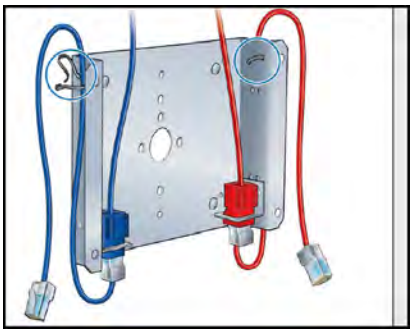

7. Attach the plate to U-bracket, using the four screws provided in the kit.

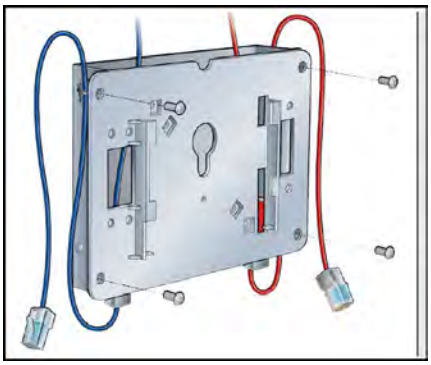

8. Attach the RP plate with the four screws provided in the kit.

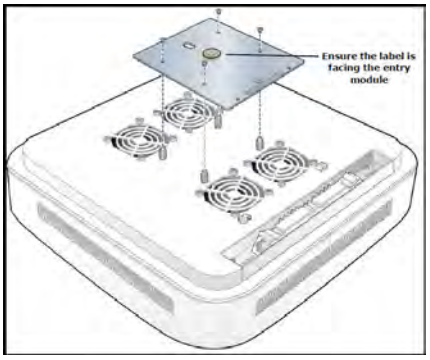

9. Connect the Red Primary and Blue Secondary Ethernet cables to the RP corresponding ports, as shown below.

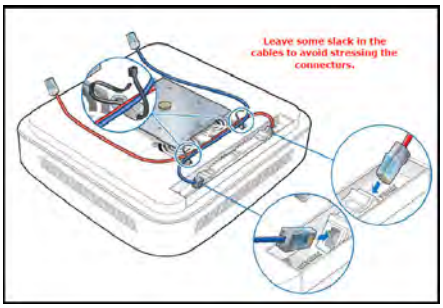

10. Lift the RP near the wall plate and attach the Red and Blue cables to the corresponding Red and Blue ports.

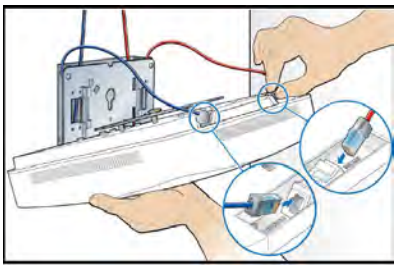

11. Attach the RP to the mounting plate.
    a. Align the keyhole opening on the mounting plate with the button on the RP mounting plate.
    b. Insert the RP into the mounting plate slot and slide until the RP plate meets the tabs on the octagon box plate.

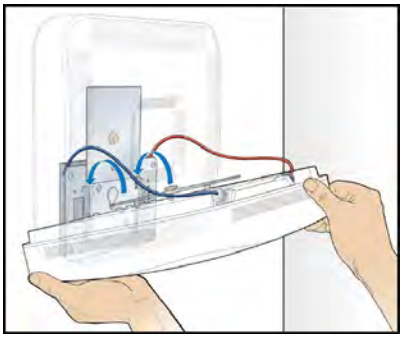

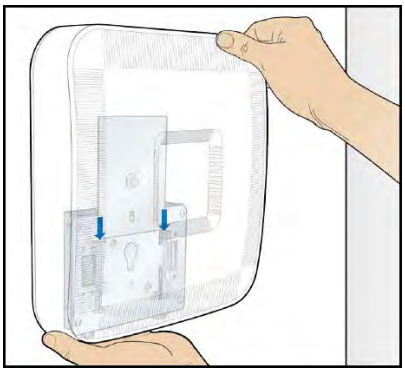

12. Gently slide the RP downward ad lock it into place.

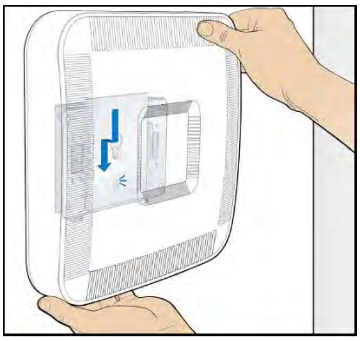

Flown Mount

The Radio Point can be flown mounted on the end of a rod. This configuration is used for buildings where there are no drop ceilings.

Mounting the Radio Point (RP) in the flown configuration requires the following hardware provided by CommScope in the mounting kit as shown in the following table:

1	4" octagon box, 1-1/2" deep with 1/2" side cutouts **Note:** Remove the top, middle cutout.
2	RP plate and 4 screws
3	Mounting plate and 2 screws
4	1 Red and 1 Blue RJ45 jacks
5	1 Red Primary cable and 1 Blue secondary cable

FIGURE 6: CommScope flown mounting kit

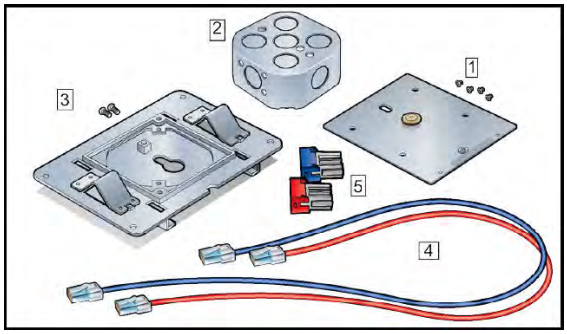

Mounting the Radio Point (RP) in the flown configuration requires the following hardware provided by the system integrator:

- Rod, 3/8-inch threaded
- Nut
- Lock nut, nylon
- Flat washers

Flown mount installation

1. Cut the threaded, 3/8-inch rod to the required length and attach it to the ceiling.
2. Install the nut and a flat washer on the rod.
3. Slide the octagon box on the rod and install a flat washer and the nylon lock nut.

Note: Be sure the octagon box is tight between the nuts and there is enough clearance at the end of the rod to attach the plate to the octagon box.

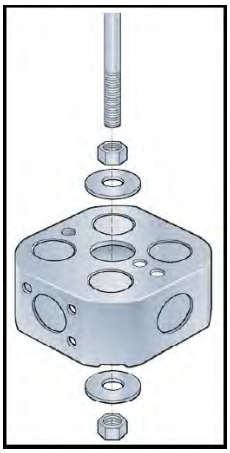

4. Attach the plate to the octagon box.

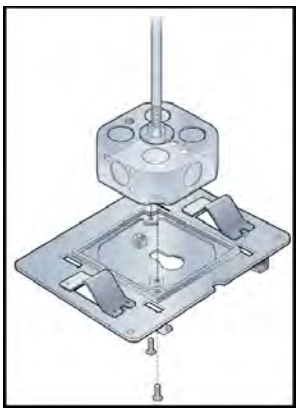

5. Insert the Red and Blue RJ45 jacks on the cables from the ceiling to the mounting plate angle brackets, as shown.

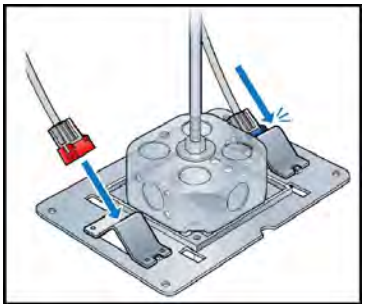

6. Attach the mounting plate to the RP.

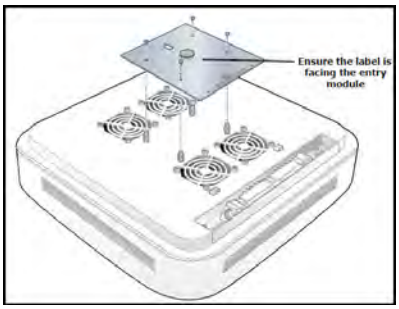

7. Connect the Red Primary and Blue Secondary cables to the RP.

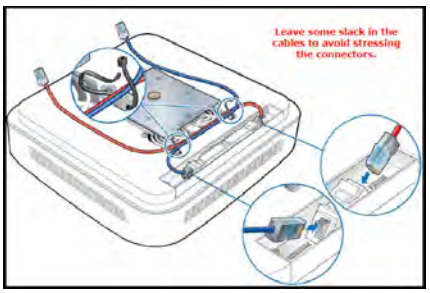

8. Lift the RP and insert the Red and Blue RP cables into the Red and Blue RJ45 jacks, respectively.

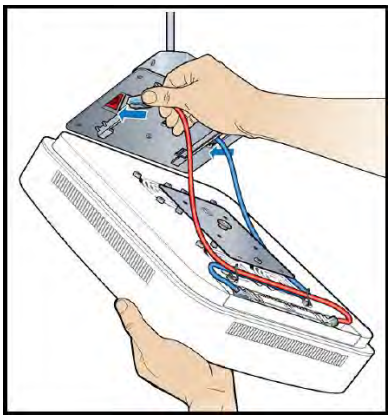

9. Attach the RP to the mounting plate.
   a. Align the keyhole opening on the mounting plate with the button on the RP mounting plate.
   b. Insert the RP into the mounting plate slot and slide until the RP plate meets the tabs on the octagon box plate.

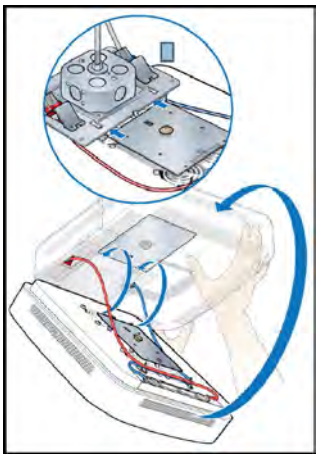

10. Lift the RP vertically and slide it into the locked position.

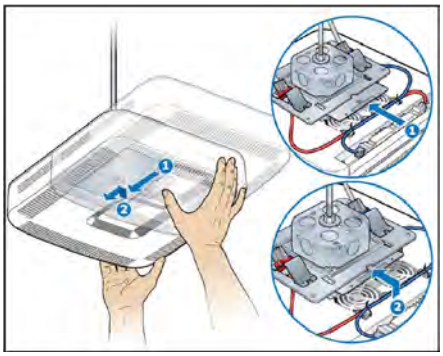

Pole mount

Mounting the Radio Point (RP) on a pole requires the following hardware provided by CommScope in the mounting kit as shown in the following table:

1	4" octagon box, 1-1/2" deep with 1/2" side cutouts **Note:** Remove the top, middle cutout.
2	RP plate and 4 screws
3	Mounting plate and 2 screws
4	1 Red and 1 Blue RJ45 jacks
5	1 Red Primary cable and 1 Blue secondary cable

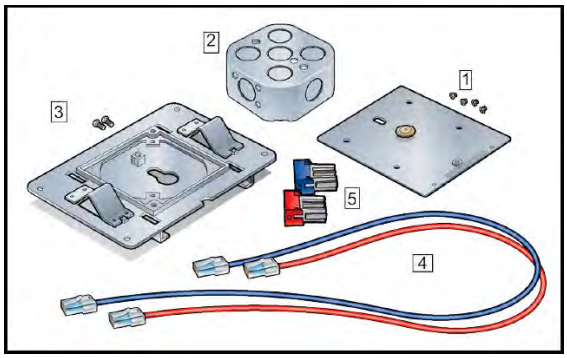

The following hardware is provided by the system integrator:

- Pole clamp that fits the dimension of the pole (with screws)
- Threaded rod (length?)
- Two flat washers (to fit the rod)
- One nut (to fit the rod)
- One lock nut (to fit the rod)

Pole mount installation

1. Attach the RP plate.

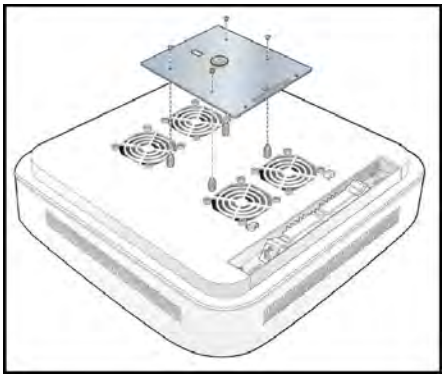

2. Connect the Red Primary and Blue Secondary cables to the RP.

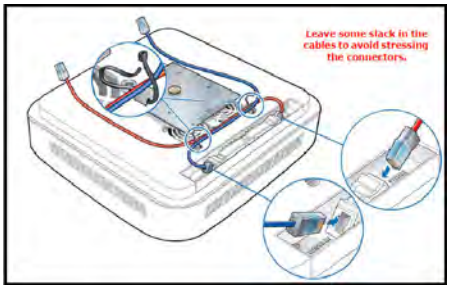

3. Attach the pole clamp to the pole, and the rod to the pole clamp.

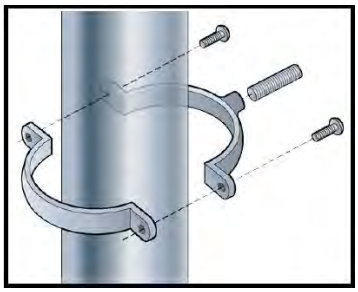

4. Attach the octagon box to the rod.
   a. Secure the nut to the rod.
   b. Add one flat washer.
   c. Insert the octagon box on the rod.
   d. Add the other flat washer.
   e. Secure the lock nut.

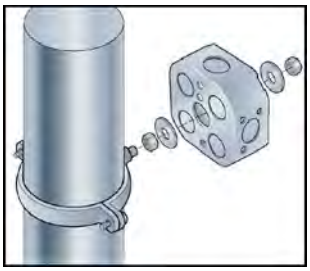

5. Attach the mounting plate to the octagon box with the two screws provided.

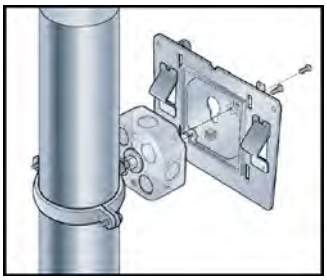

6. Insert the RJ45 jacks into the mounting plate.

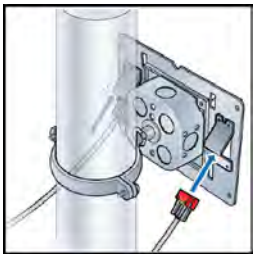

7. Connect the Red Primary and Blue Secondary cables on the RP to the corresponding RJ45 jacks.

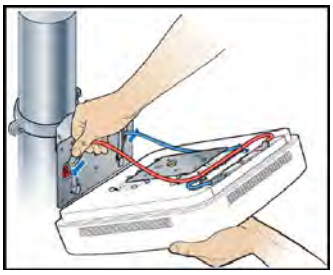

8. Lift the RP and gently slide it onto the pole mounting plate.

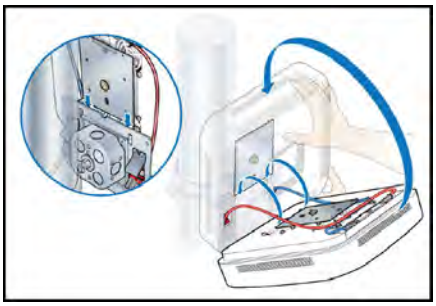

9. Slide the RP down and lock into place.

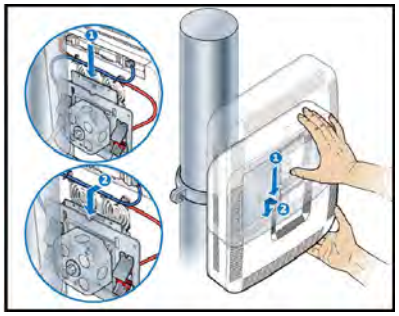

RP5100i installation

RP5100i installation overview

This chapter describes installing indoor Radio Points on ceiling tiles, above ceiling tiles, on poles and in a flown configuration.

The RP5100i is the Radio Point for indoor solutions.

There are four configurations for installing the RP5100i, which are dependent on the ceiling type.

- Ceiling mount, on tile
- Ceiling mount, above tile
- Flown mount
- Pole mount

Note: Once the Radio Point is installed and powered on, it may take up to 20 minutes for the frequency to stabilize and lock.

Note: If the MR port is connected to a switch that does not provide IEEE802.3bt, type-4 PoE power, the SR port can be used to provide power with a PoE++ injector. For more information, see *ONECELL® Network Planning Guide, v7.0 (M0306OK)*.

Ceiling mount

Mounting the Radio Point (RP) above or on the ceiling tile requires the following hardware provided by CommScope:

- Radio Point plate and screws
- 4" octagon box, 1-1/2" deep with 1/2" side cutouts
- Clamp and screw

FIGURE 7: CommScope ceiling mount kit contents

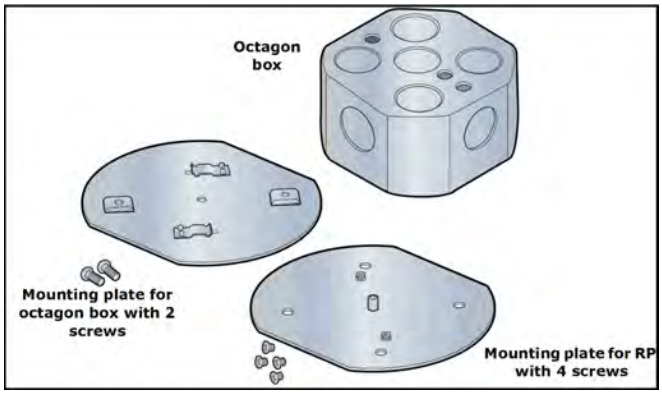

Mounting the Radio Point (RP) above or on the ceiling tile requires the following hardware provided by the system integrator:

- Drop rail – Eaton B-line BA50A or equivalent, with a static load capacity of at least 25 lbs without a drop wire, recommended

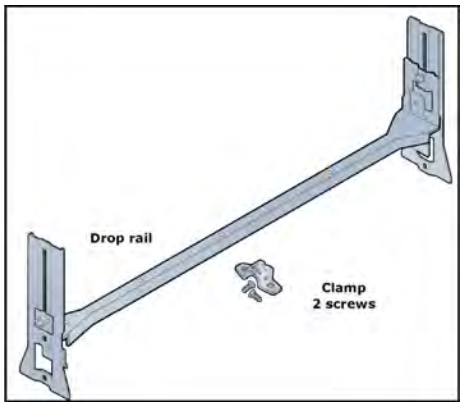

Mounting the Radio Point on the Ceiling Tile

1. Remove two ceiling tiles from the overhead.

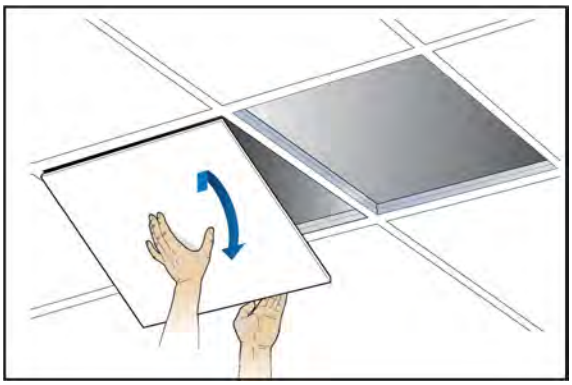

2. Place the octagon box on the tile and trace the outline. Cut the opening.
3. Drill a 1/2-inch diameter hole for the Ethernet cable pass-through.

Note: Use a 1-1 /2 deep RACO 8125 or equivalent.

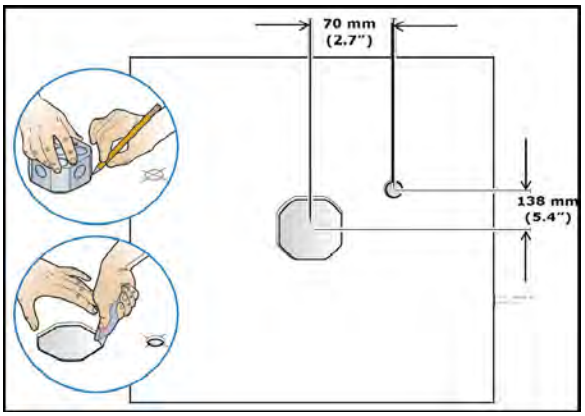

4. Attach the octagon box to the ceiling bracket using a clamp and screw.

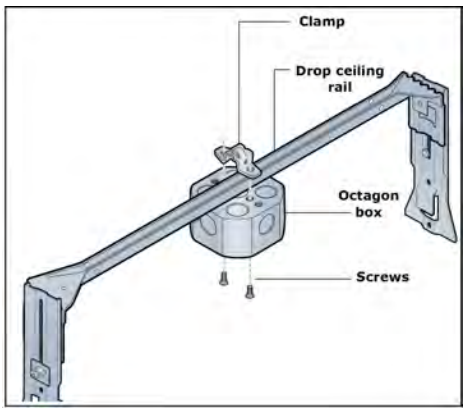

5. Replace the ceiling tile with the cutouts.

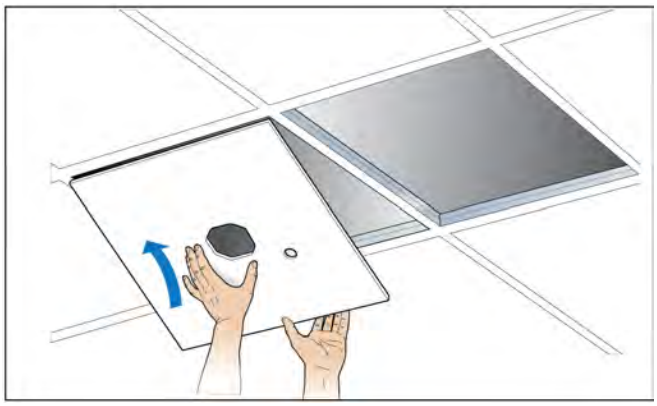

6. Install the drop rail/octagon box assembly over the modified tile.

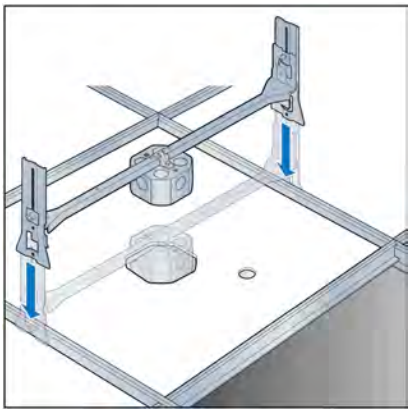

7. Attach the mounting plate onto the octagon box and feed the Ethernet cable through the small hole in the ceiling tile.

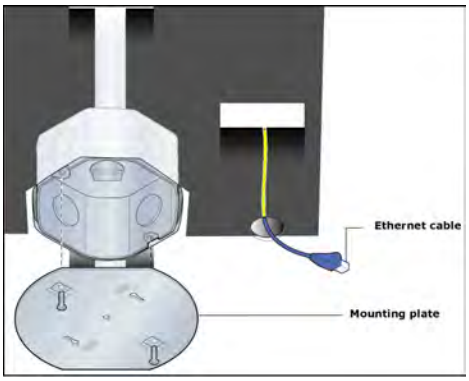

8. Attach base plate to the Radio Point.

Note: Apply thread locking compound to screws prior to installation.

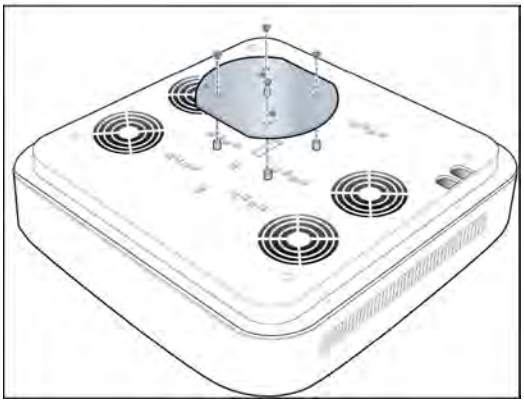

9. Mount the Radio Point on the octagon box plate.

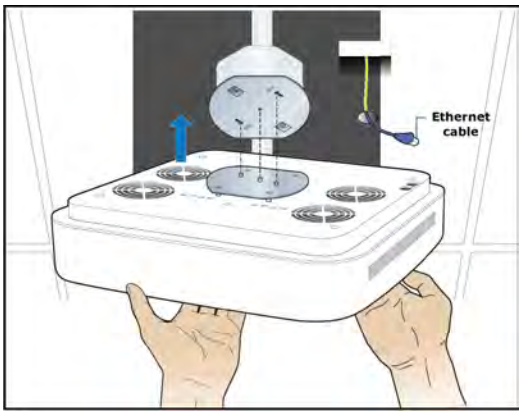

10. Secure Radio Point to the octagon plate.

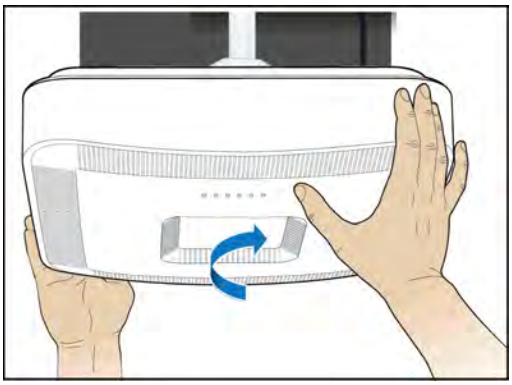

11. Remove the cover from the RP.

Note: The cover is attached to the RP with two lanyards.

12. Connect Ethernet cable to the MR port on the Radio Point.

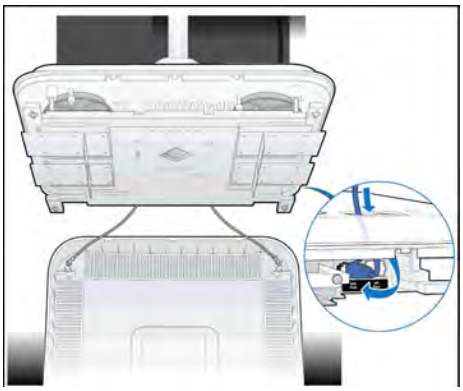

13. Replace plastic cover on the Radio Point.

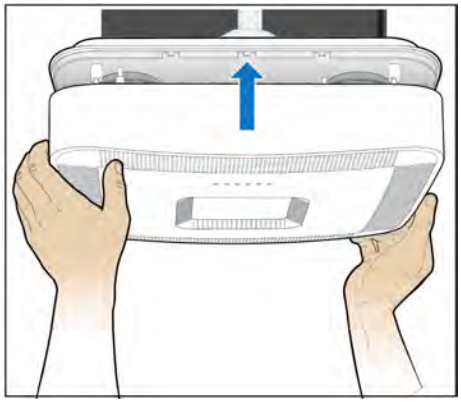

14. Replace the ceiling tile next to the Radio Point.

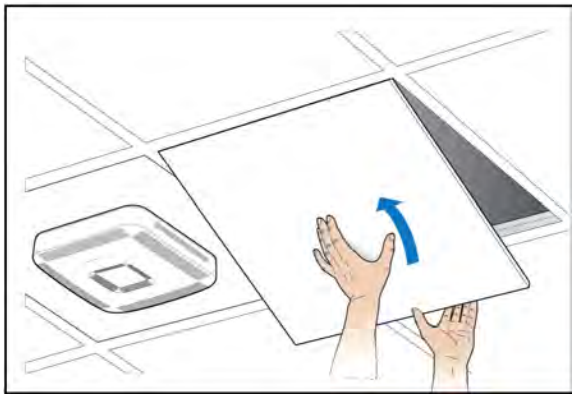

Mounting the Radio Point above the ceiling tile

1. Remove ceiling tile from the overhead.

2. Attach the octagon box to the bracket.

Note: CommScope recommends an Eaton B-line – BA50A adjustable bracket.

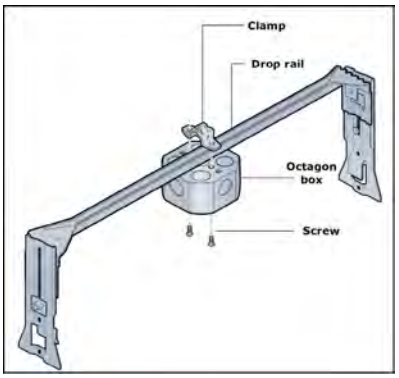

3. Attach the bracket to the mounting plate to the octagon box.

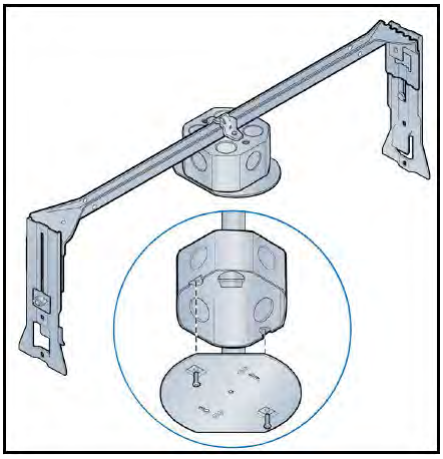

4. Attach plate to the Radio Point.

Note: Apply thread locking compound to screws prior to installation.

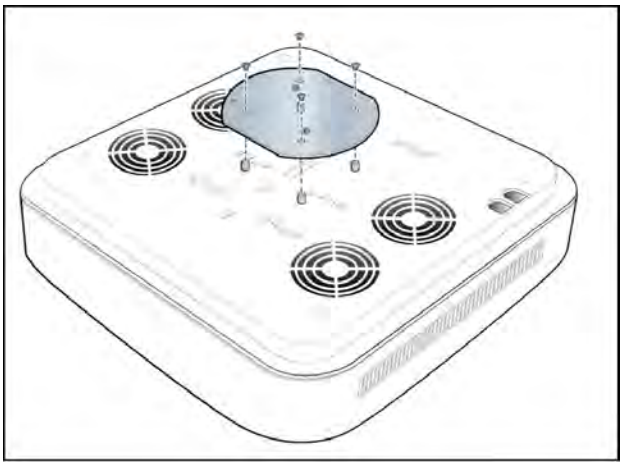

5. Attach the Radio Point to the octagon box mounting plate.

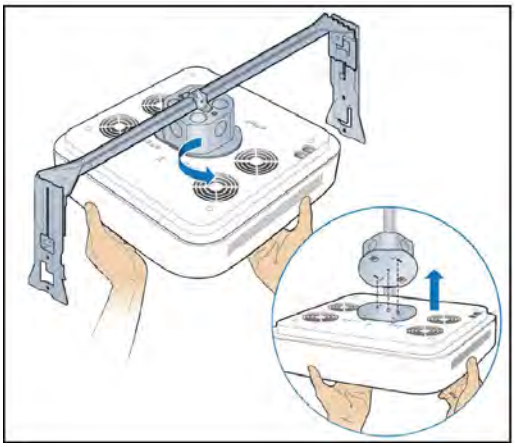

6. Install drop rail above the ceiling tile.

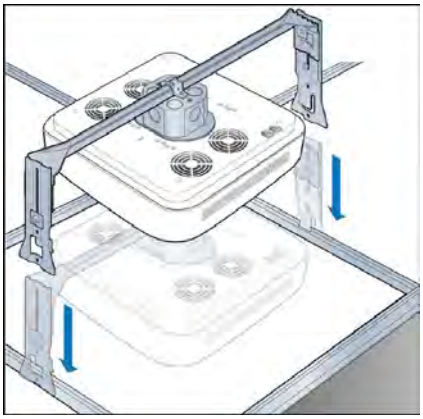

7. Remove the cover from the RP.

Note: The cover is attached to the RP with two lanyards.

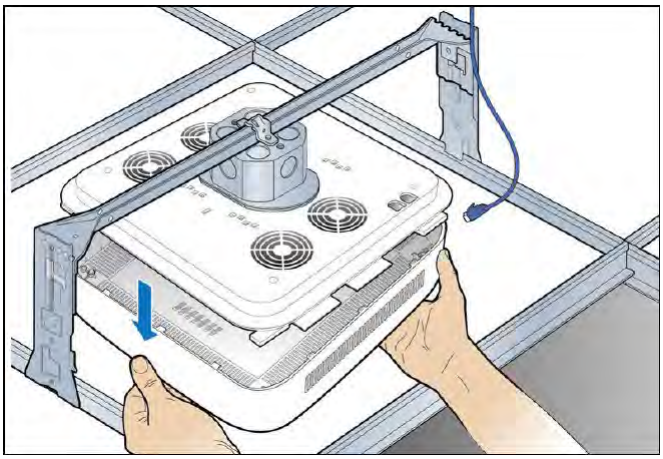

8. Connect the Ethernet cables to the Radio Point MR port.

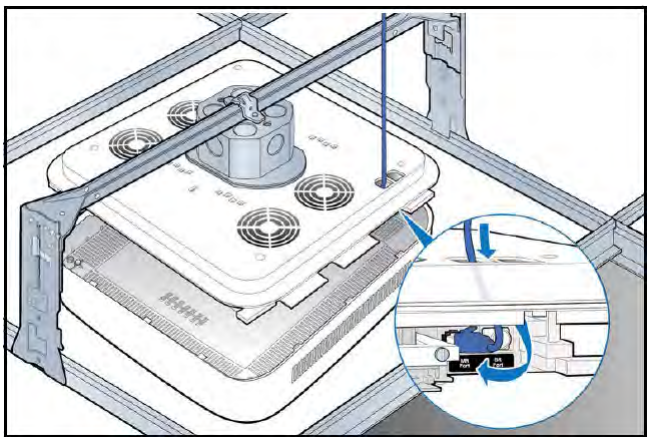

9. Replace the cover on the Radio Point.

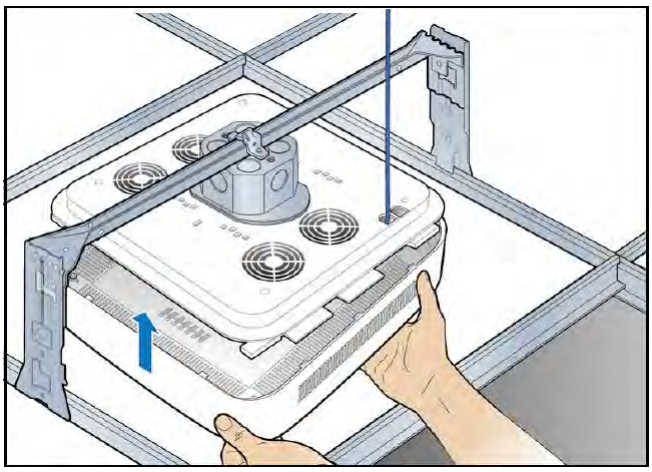

Note: The minimum clearance for cooling is 3 inches.

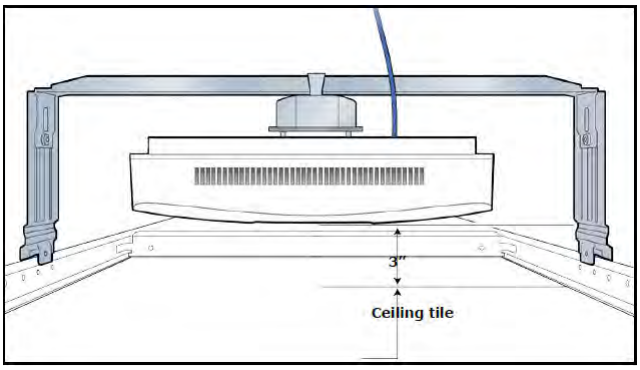

10. Replace the ceiling tile.

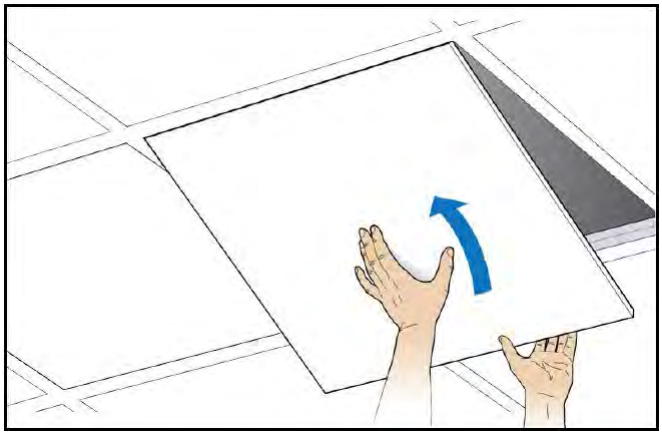

Flown Mount

The Radio Point can be flown mounted on the end of a rod. This configuration is used for building where there are no drop ceilings.

Mounting the Radio Point (RP) in the flown configuration requires the following hardware provided by CommScope in the mounting kit:

- Radio Point plate and screws
- 4" octagon box, 1-1/2" deep with 1/2" side cutouts

  Note: Remove the top, middle cutout.

- Clamp and screw – this hardware is not required for the flown mount option

FIGURE 8: CommScope flown mount kit contents

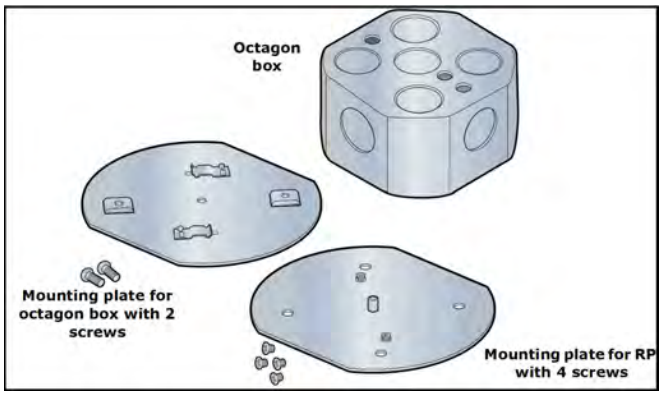

Mounting the Radio Point (RP) in the flown configuration requires the following hardware provided by the system integrator:

- Rod, 3/8-inch threaded
- Nut
- Lock nut, nylon
- Flat washers

Flown mount installation

1. Attach the threaded, 3/8-inch rod, cut to the required length, to the ceiling.
2. Install the nut and a flat washer on the rod.
3. Slide the octagon box on the rod and install a flat washer and the nylon lock nut.

Note: Ensure the bracket is tight between the nuts and there is enough clearance at the end of the rod to attach the bracket to the Radio Point.

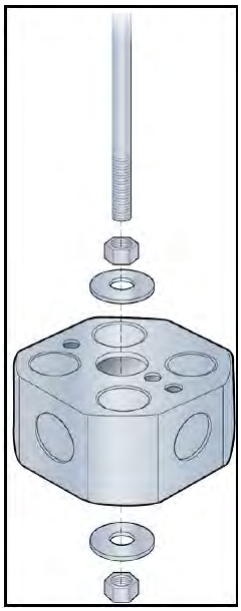

4. Attach plate to octagon box.

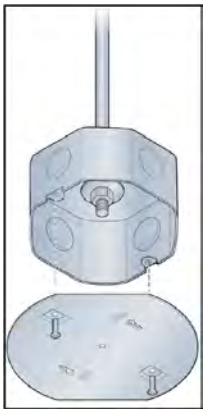

5. Attach the mounting plate to the Radio Point.

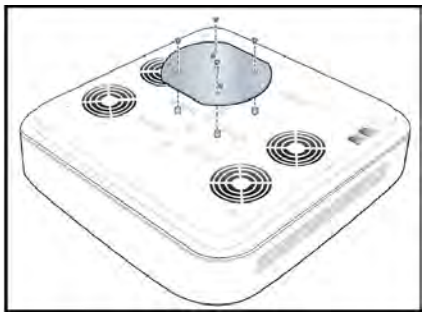

6. Attach the Radio Point to the octagon box.

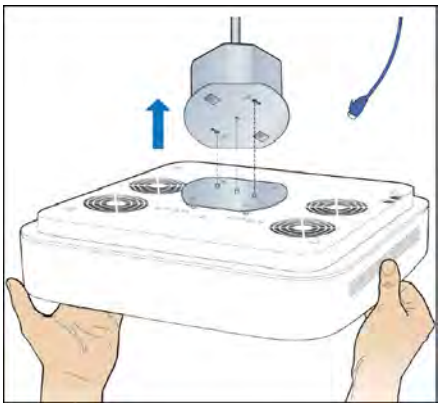

7. Remove the cover from the RP.

Note: The cover is attached to the RP with two lanyards.

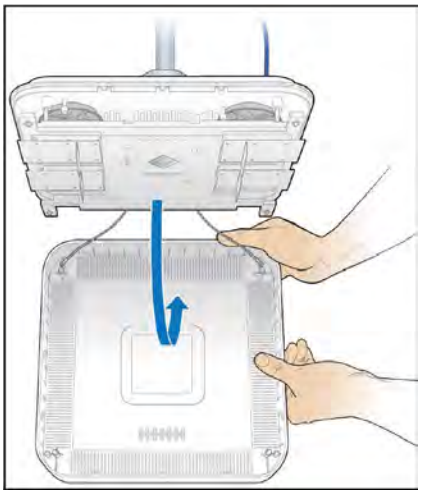

8. Connect the Ethernet cable to the Radio Point MR port.

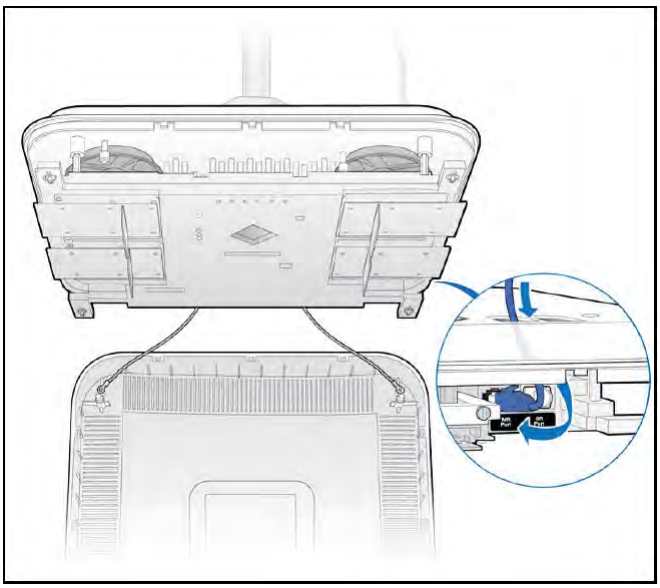

9. Attach the plastic cover to the Radio Point.

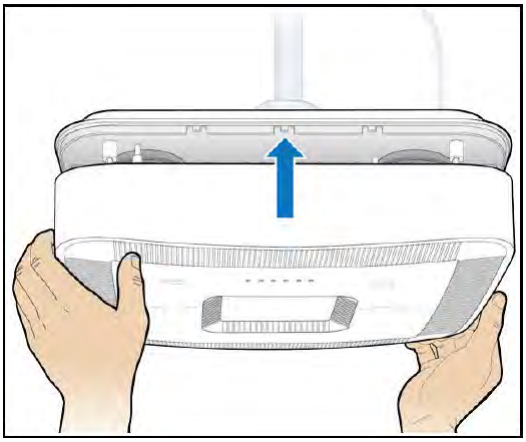

Installation is complete.

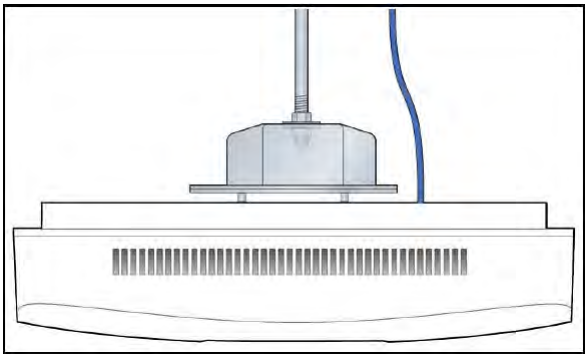

Pole Mount

The Radio Point can be pole mounted. This configuration is used for building where there are no drop ceilings.

Mounting the Radio Point (RP) on a pole requires the following hardware provided by CommScope in the mounting kit:

- Mounting bracket
- Screws

FIGURE 9: Mounting bracket kit contents

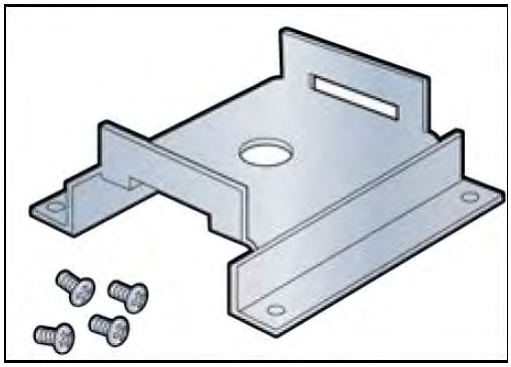

Mounting the Radio Point (RP) on a pole requires the following hardware provided by the system integrator:

- Adjustable clamp at least 2 inches larger than the circumference of the pole

Pole mount installation

1. Attach the bracket to the Radio point.

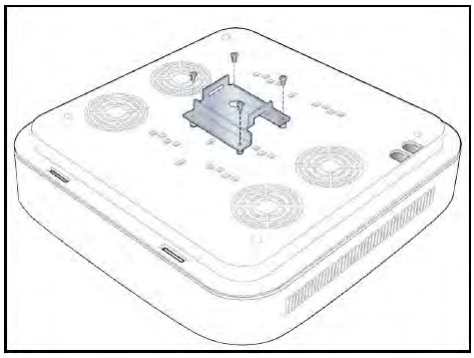

2. Slide the adjustable clamp through the slots on the Radio Point bracket.
3. Wrap the clamp around the pole and tighten the clamp screw to secure the Radio Point to the pole.

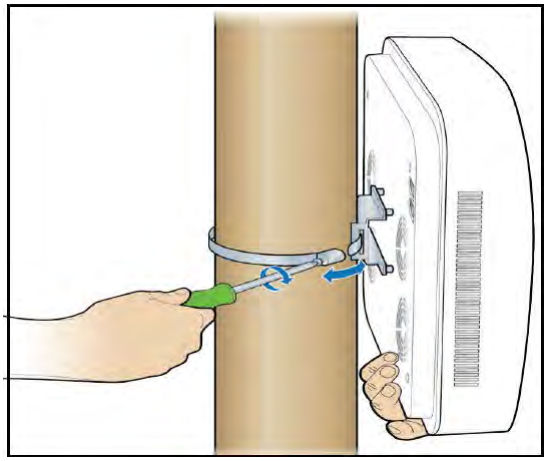

4. Remove the cover from the RP.

Note: The cover is attached to the RP with two lanyards.

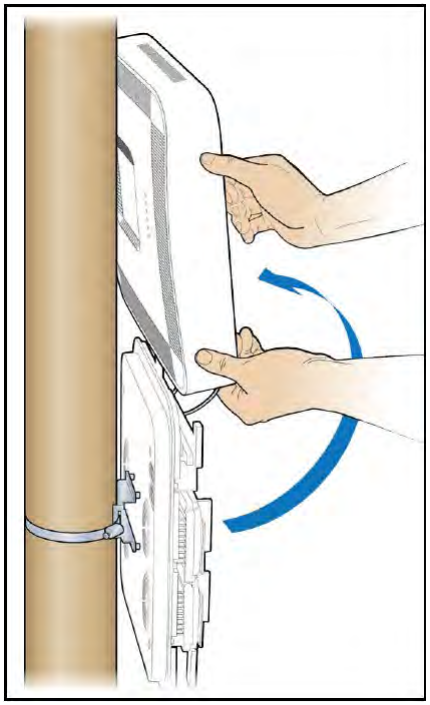

5. Connect the Ethernet cable to the Radio Point MR port.

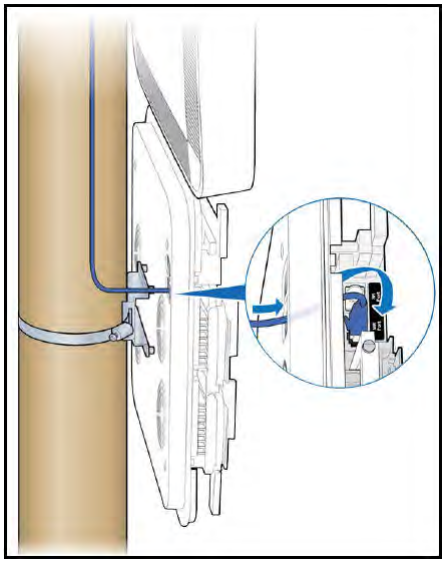

6. Replace the plastic cover on the Radio Point.

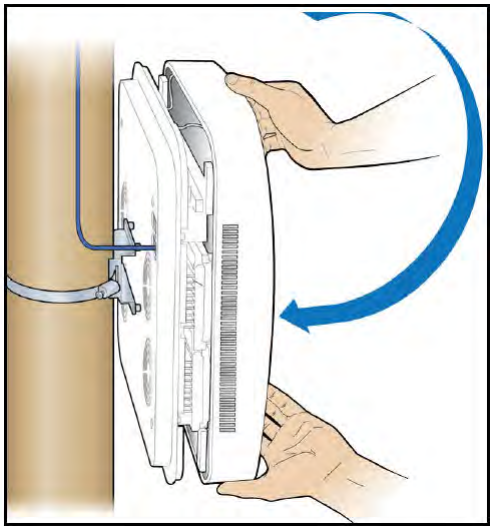

Installation is complete.

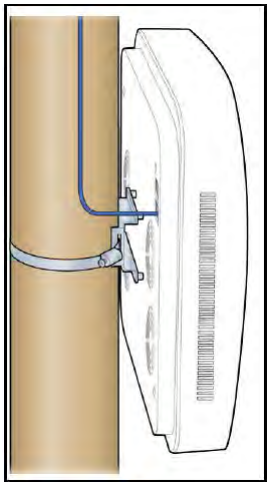

RP5100r installation

Rugged Radio Point installation overview

This chapter describes installing Rugged Radio Points on poles and walls.

The Rugged Radio Point (RP) ships with the following hardware:

- Radio Point
- Mounting plate
- Mounting bolts (M8 Hex)
- RJ45, IP67 connector for CAT 6A cables

FIGURE 10: Hardware provided by CommScope

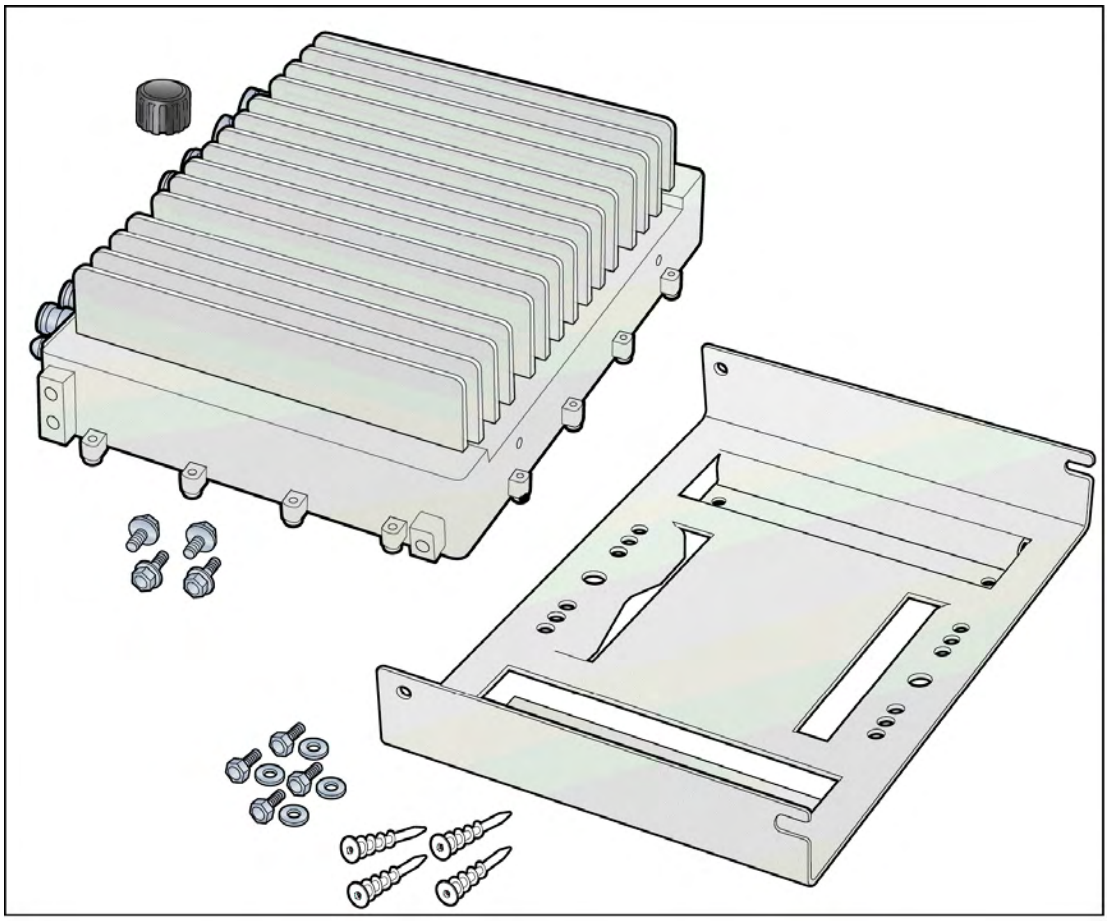

Note: An M8 hex wrench is required to install mounting bolts.

Mounting the Radio Point (RP) on a pole requires the following hardware provided by the system integrator:

- Two U bolts
- Four nuts
- RJ45, IP67 connector for CAT 5E
- Ethernet surge protector, as required by local code (for example, DTK-MRJPOEX or DTK-MRJPOES)

Note: If the MR port is connected to a switch that does not provide IEEE802.3bt, type-4 PoE power, the SR port can be used to provide power with a PoE++ injector. In this case, the installer needs to provide a CAT 5E – MPN 17-10044 connector to connect the RJ45 to the SR port. For more information, see *ONECELL® Network Planning Guide, v7.0 (M0306OK)*.

FIGURE 11: Hardware provided by the systems integrator

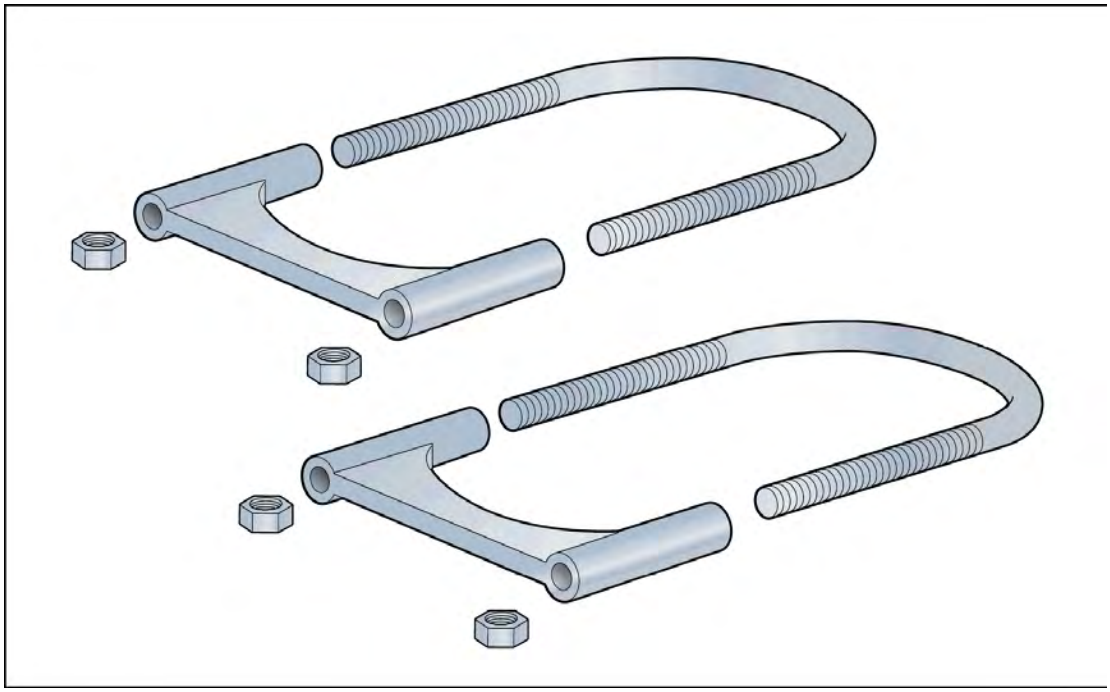

Mounting the Radio Point (RP) on a wall requires the following hardware provided by the system integrator:

- Four molly screws capable – 50 lb (23 kg) minimum rating

Note: Once the Radio Point is installed and the powered on, it may take up to 20 minutes for the frequency to stabilize and lock.

Before connecting the Ethernet cables to the RP, terminate the RP end of the Ethernet cable with the RJ45, IP67 connector.

FIGURE 12: RJ45, IP67 connector assembly

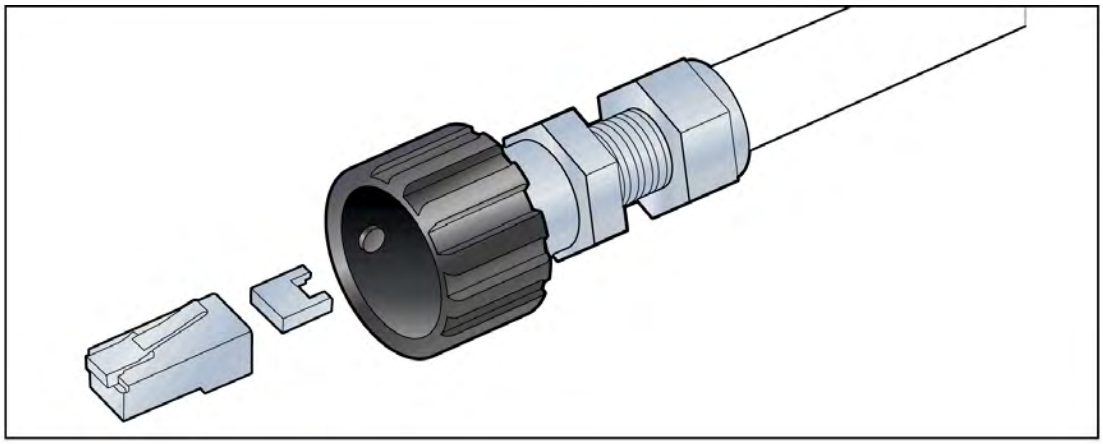

Antenna port label

In a multi operator deployment, each operator can connect their own antenna for the Bands and slots they intend to use. This feature allows an operator to reserve the Band/Radio module slot on an outdoor RP5100r to be used for or by a Baseband Controller when outdoor RP5100s are deployed in an enterprise with multiple Baseband Controllers (up to 4).

The antenna port label shows the antenna ports, internal slot number and supported band. These parameters are configured at the factory.

FIGURE 13: Antenna port label

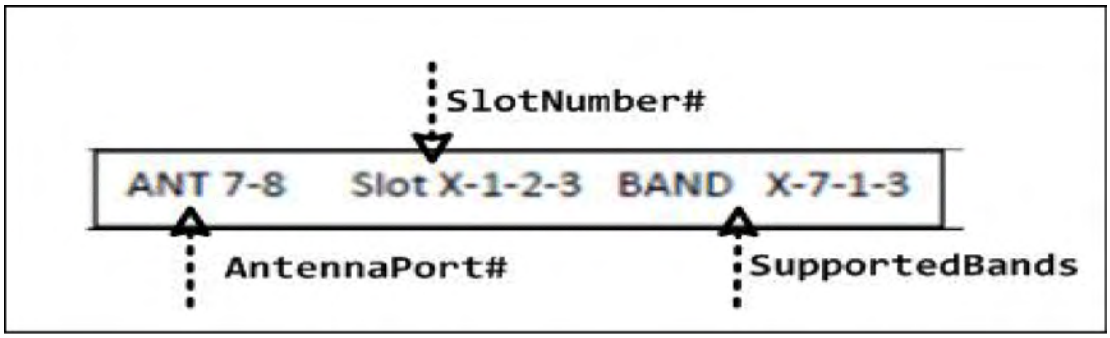

Pole mount installation

There is vertical orientation for pole mount installations

Note: The minimum pole diameter requirement is 4'' (102mm).

Vertical pole mount

1. Slide the two U bolt clamps onto the pole and secure the RP mounting plate to the clamps with four nuts.

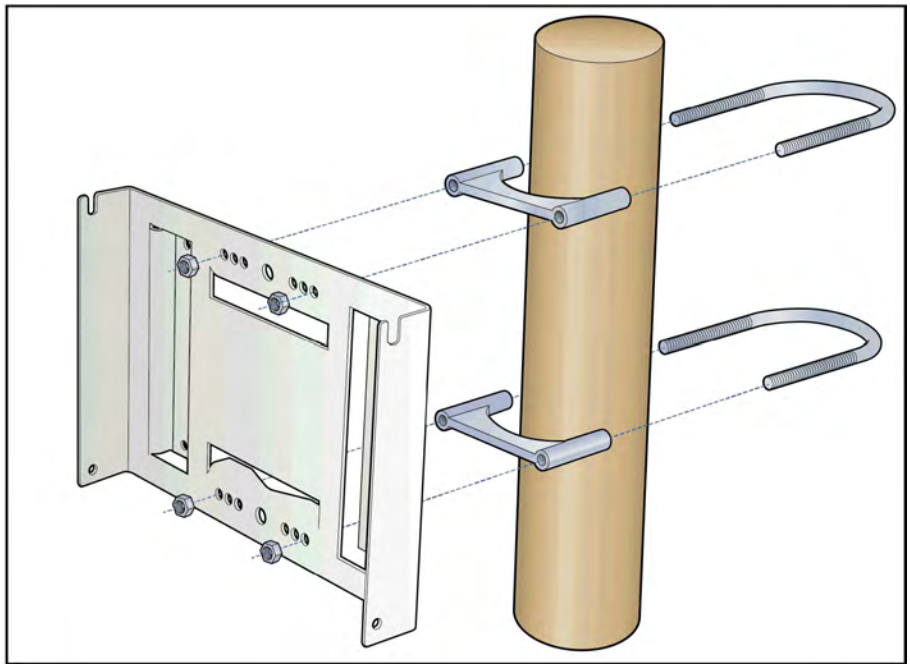

2. Insert two screws into the upper holes on opposite sides of the RP.

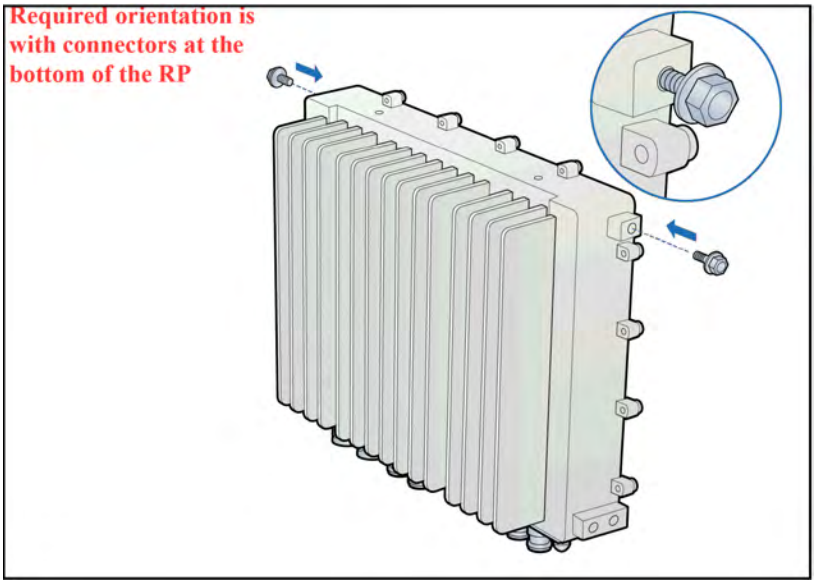

3. Hang the RP to the mounting bracket using the installed screws.

CAUTION: Ensure that the RP is oriented correctly with all connectors at the bottom of the RP.

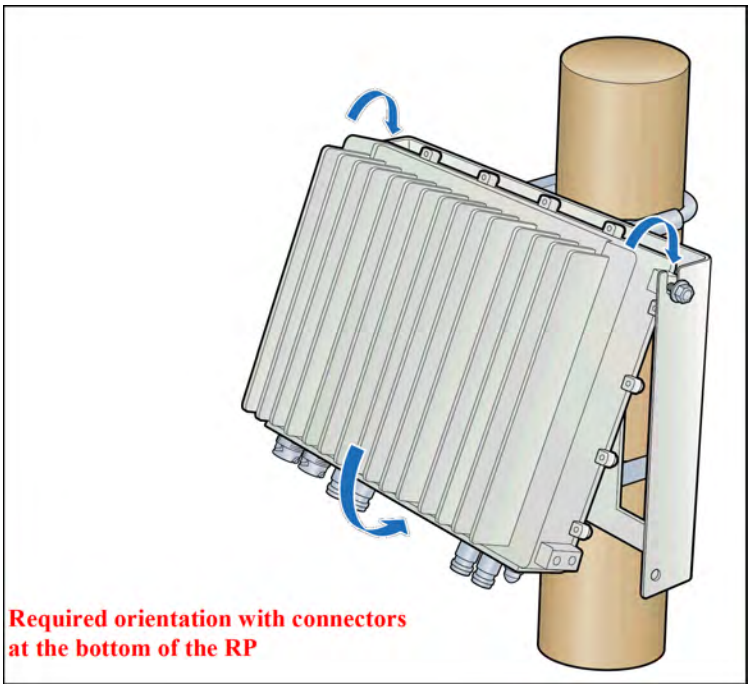

4. Align holes at bottom location of bracket. Insert and tighten the bottom screws through the plate hole into both sides of the RP. Be sure that all four screws are tightened.

Note: The torque requirement for the mounting screws is 20-21 in-lbs.

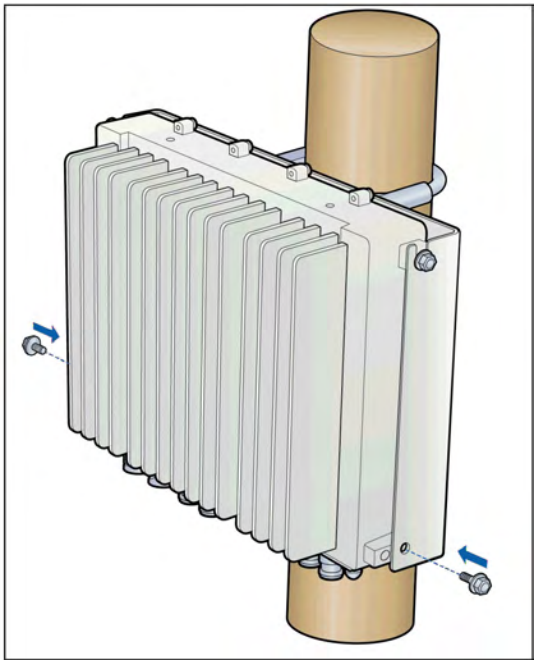

5. Connect the antenna cables on the bottom of the RP.
6. Connect the Ethernet cable RJ45 end to the bottom of the RP to the MR port.

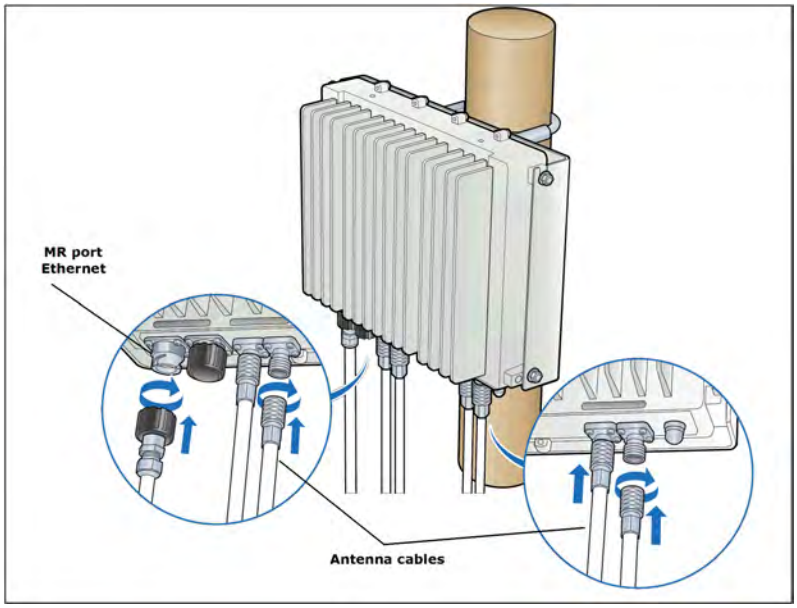

Wall mount installation

1. Drill four holes in the wall using the mounting plate to determine the hole locations. Mount the backplate on the wall with four molly screws.

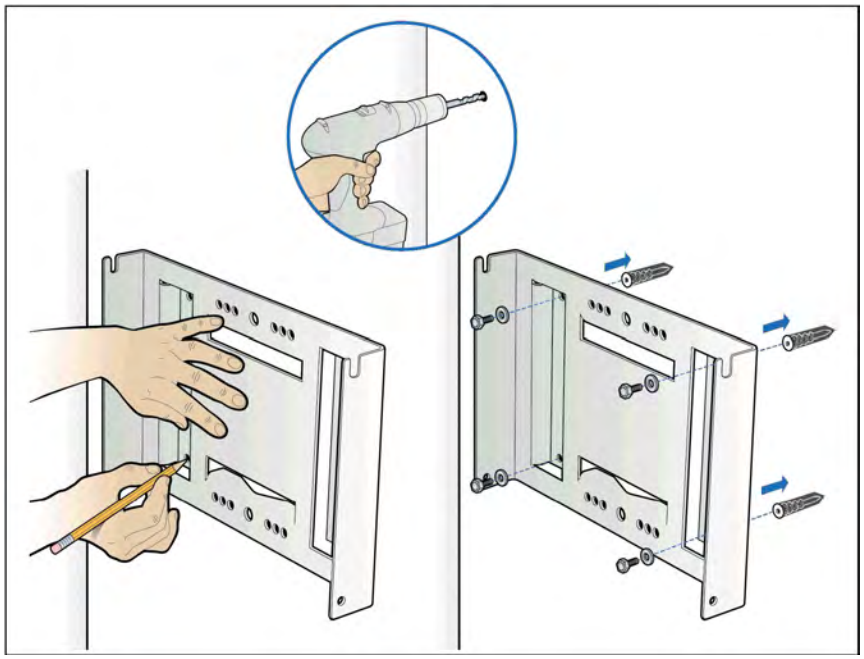

2. Insert two screws into the upper holes on opposite sides of the RP as shown in the drawing below.

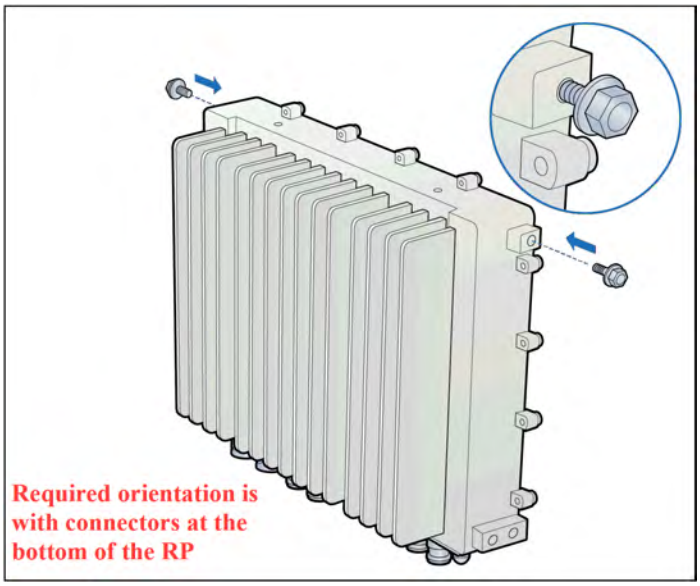

3. Attach the RP to the mounting plate.

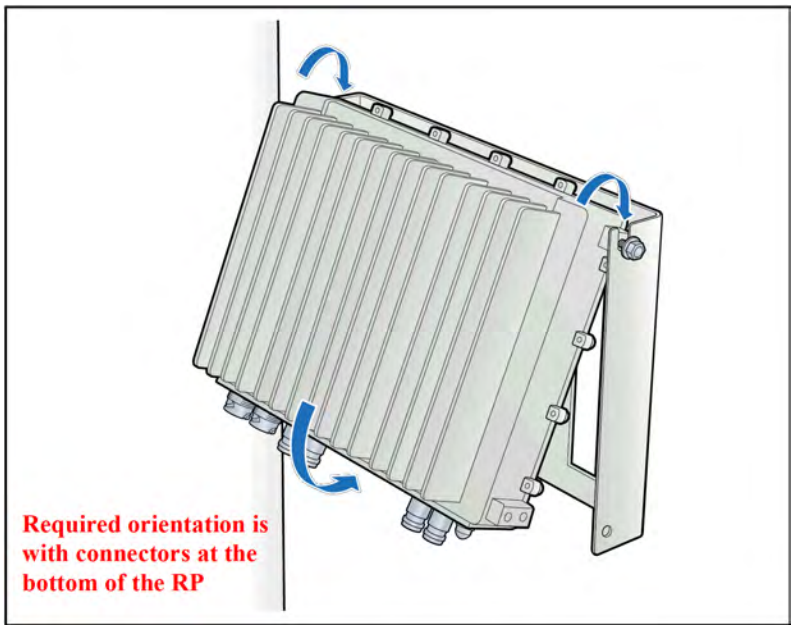

4. Tighten the top screws on the RP and insert and tighten the bottom screws on the RP.

Note: The torque requirement for the mounting screws is 20-21 in-lbs.

5. Insert and tighten the bottom screws through the plate hole into both sides of the RP.

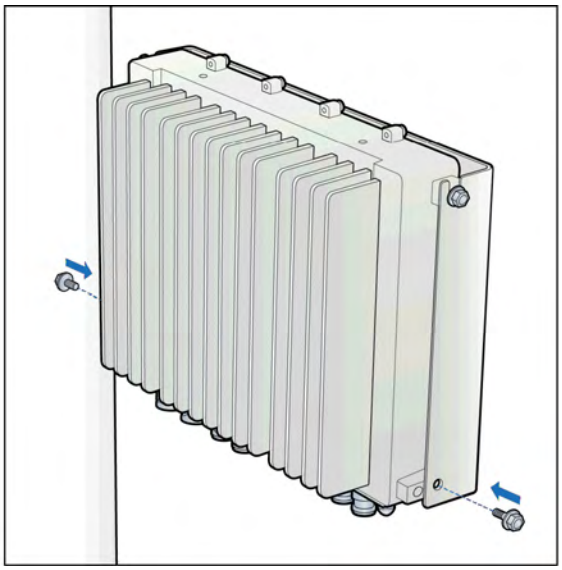

6. Connect the antenna cables on the bottom of the RP.
7. Connect the Ethernet cable RJ45 end to the bottom of the RP to the MR port.

Note: Insert the Ethernet surge protection as required by local code (for example, DTK-MRJPOEX or DTK-MRJPOES).

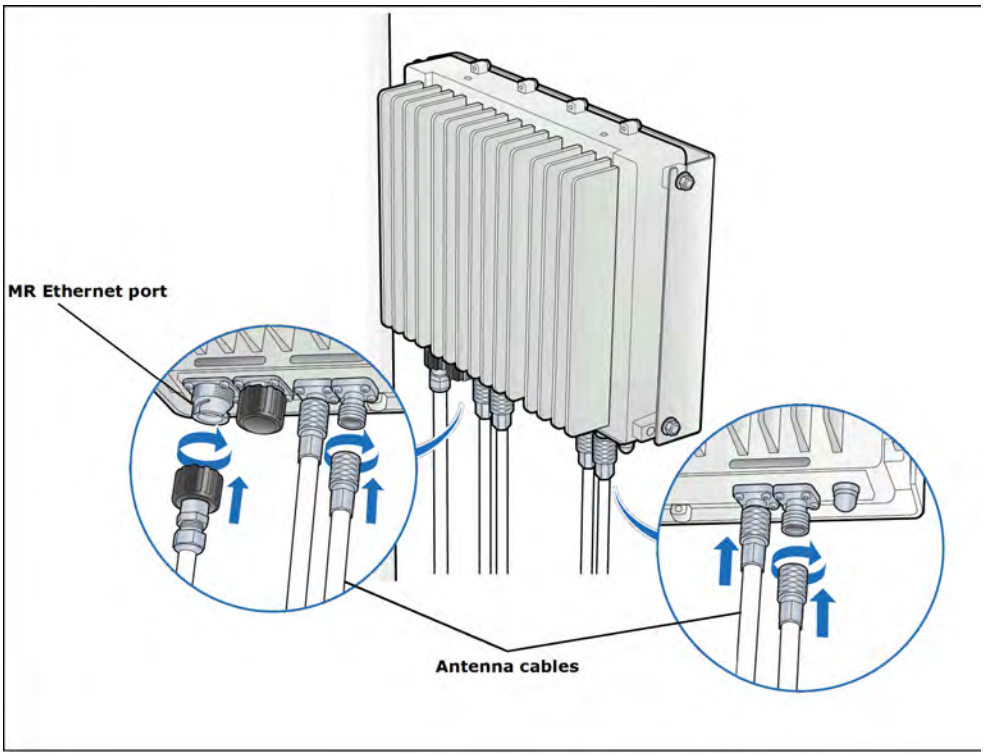

RP2000 Installation

Indoor Radio Point (RP2000) installation overview

This chapter describes installing indoor Radio Points on ceiling tiles, above ceiling tiles, on poles and in a flown configuration.

There are four configurations for installing the Radio Point, which are dependent on the ceiling type.

- Ceiling mount, on tile
- Ceiling mount, above tile
- Flown mount
- Pole mount

Note: Once the Radio Point is installed and the powered on, it may take up to 20 minutes for the frequency to stabilize and lock.

Ceiling mount

Mounting the Radio Point (RP) above or on the ceiling tile requires the following hardware provided by CommScope:

- Radio Point mounting plate and 4 screws
- Octagon box mounting plate and 2 screws
- 4" octagon box, 1-1/2" deep with 1/2" side cutouts
- Clamp with screw - not required for flown mount option

FIGURE 14: CommScope ceiling mount kit contents

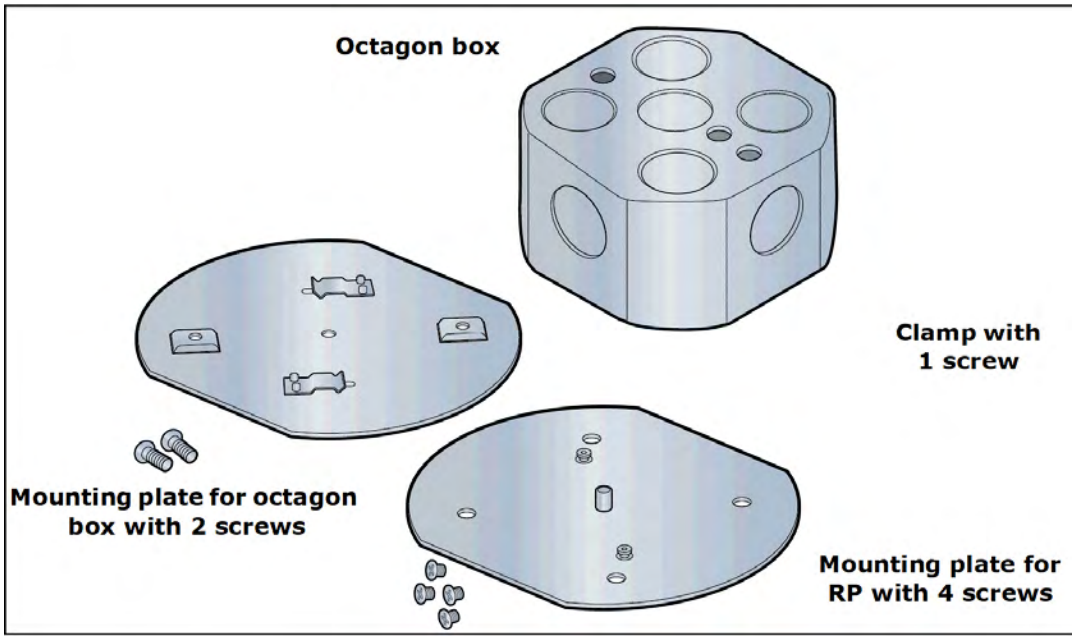

Mounting the Radio Point (RP) above or on the ceiling tile requires the following hardware provided by the systems integrator:

- Drop rail – Eaton B-line BA50 recommended

FIGURE 15: Drop rail, system integrator-provided

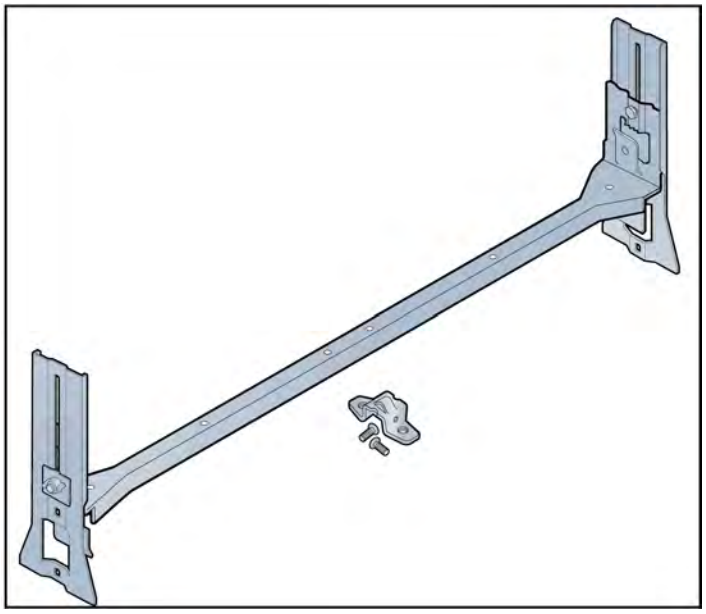

Mounting the Radio Point on the ceiling tile

1. Remove two ceiling tiles from the overhead.

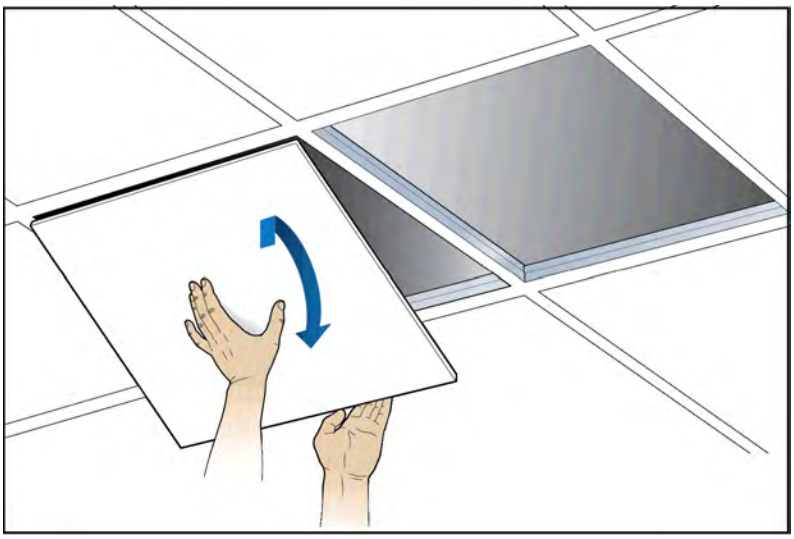

2. Place the octagon box on the tile and trace the outline. Cut the opening.
3. Drill a 1/2-inch diameter hole for the Ethernet cable pass-through.

Note: Use a 1-1/2 deep RACO 8125 or equivalent.

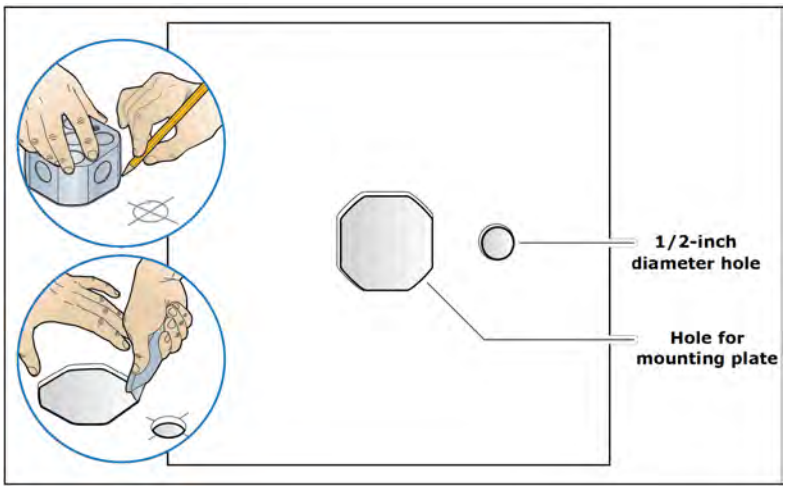

4. Attach the octagon box to the ceiling bracket using a clamp and screw.

Note: CommScope recommends the Eaton B-line – BA50 bracket.

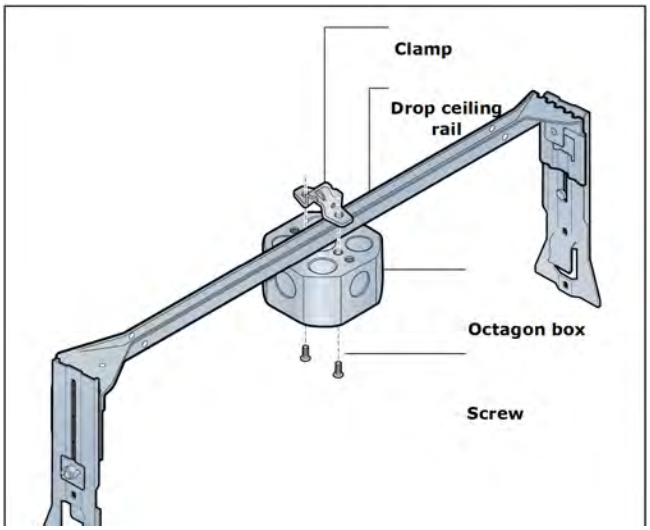

5. Replace the ceiling tile with the cutouts.

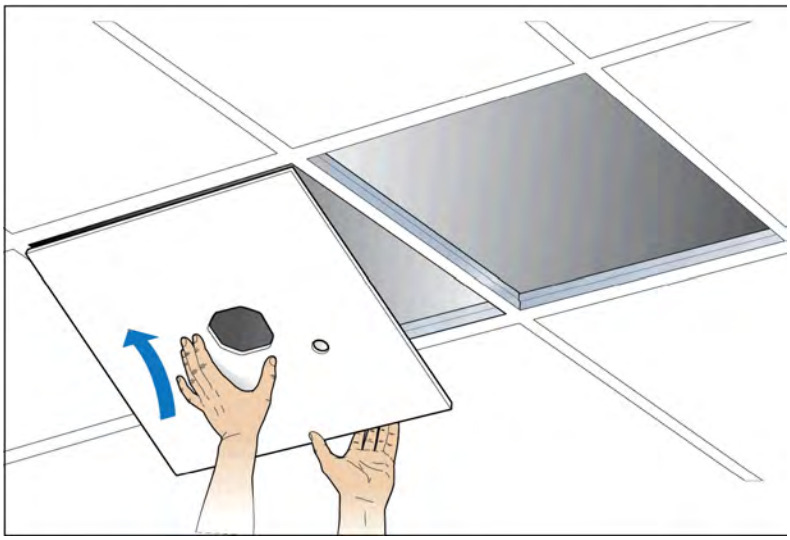

6. Install the drop rail assembly over the ceiling tile with the cutouts.

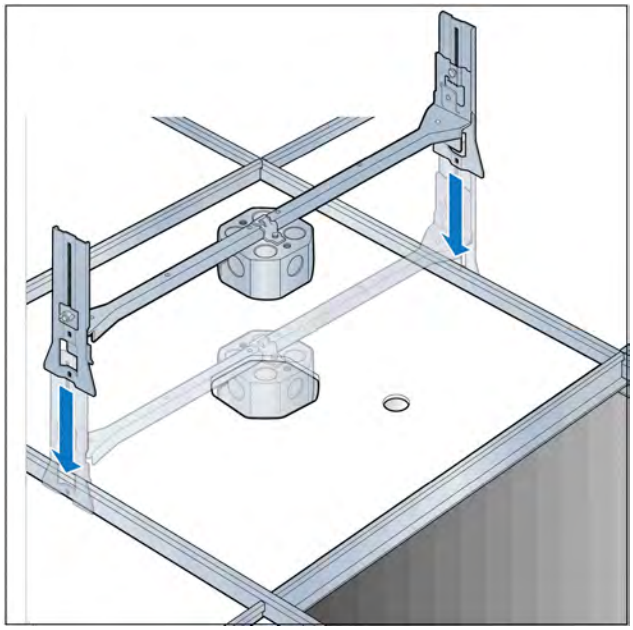

7. Attach the mounting plate onto the octagon box.

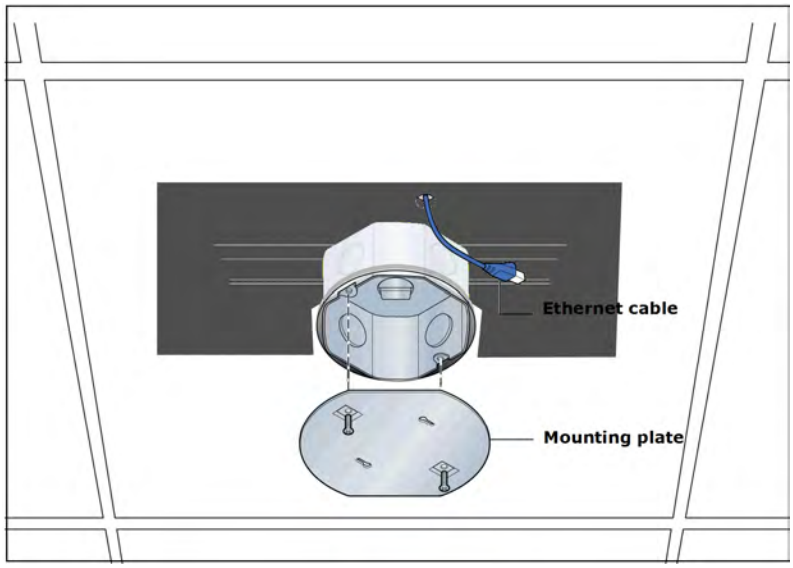

8. Attach base plate to the Radio Point.

Note: Apply thread locking compound to screws prior to installation.

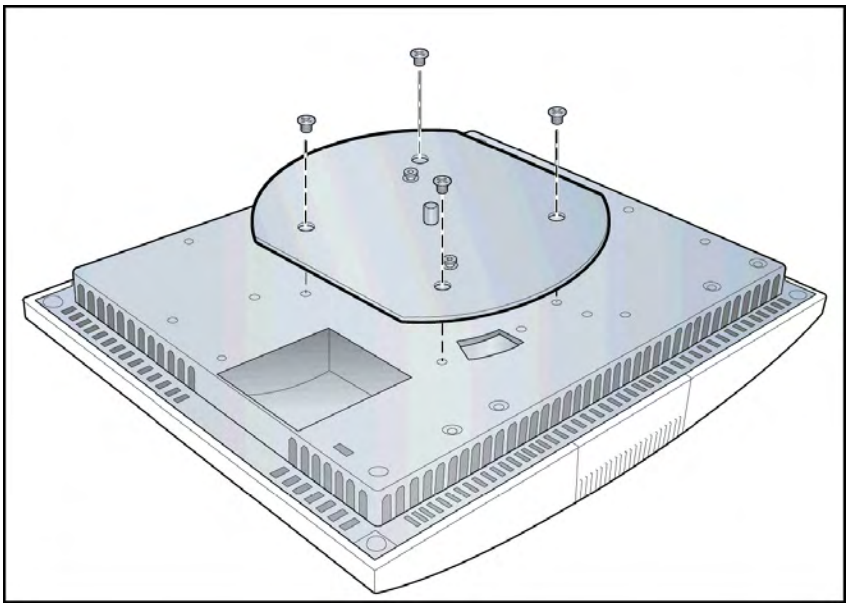

9. Mount the Radio Point to the octagon box plate.

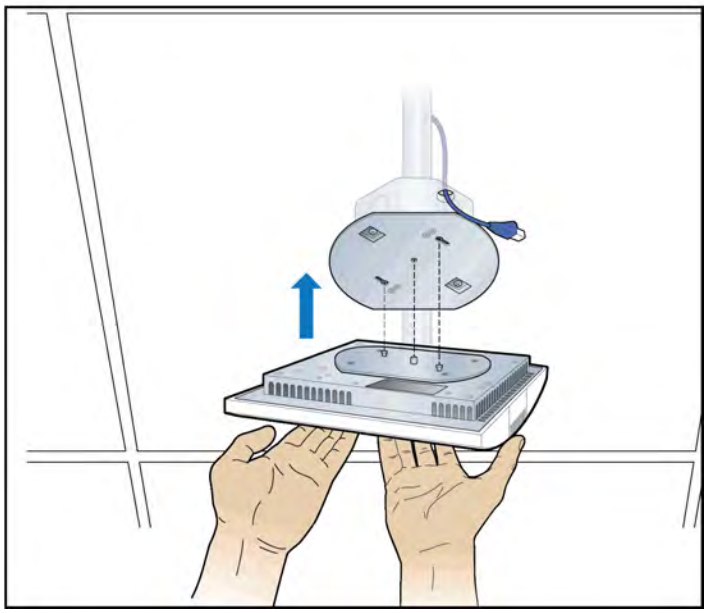

10. Secure the Radio Point.

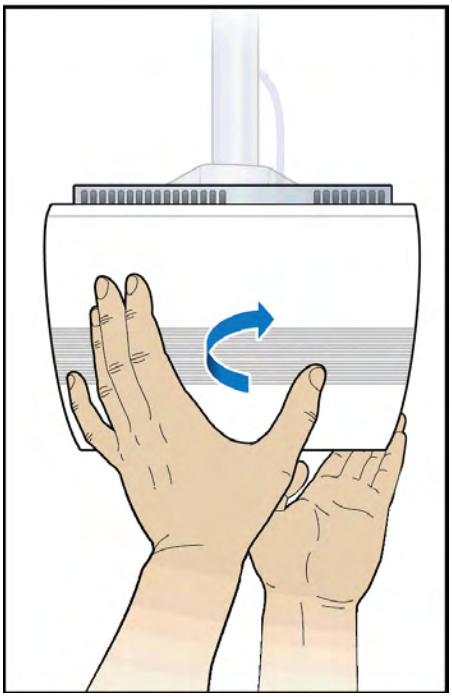

11. Connect the Ethernet cable to the Radio Point.

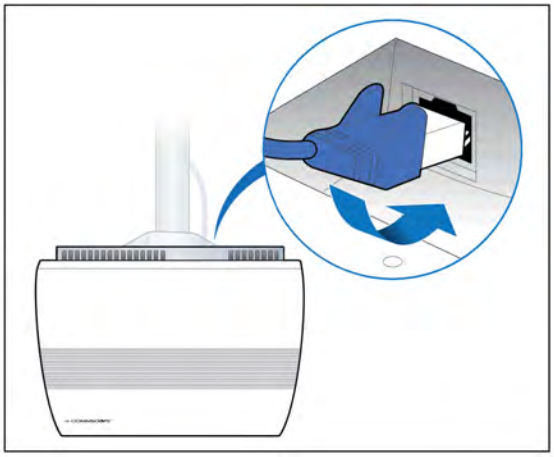

12. Replace the second ceiling tile.

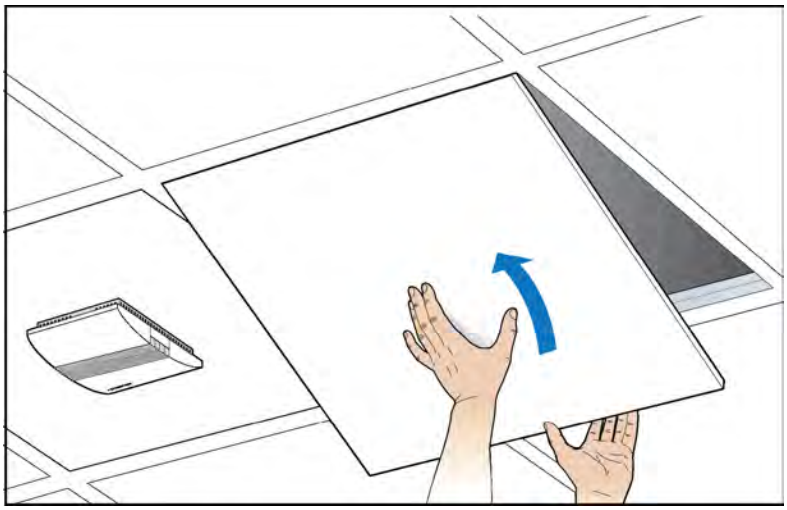

Installation is complete.

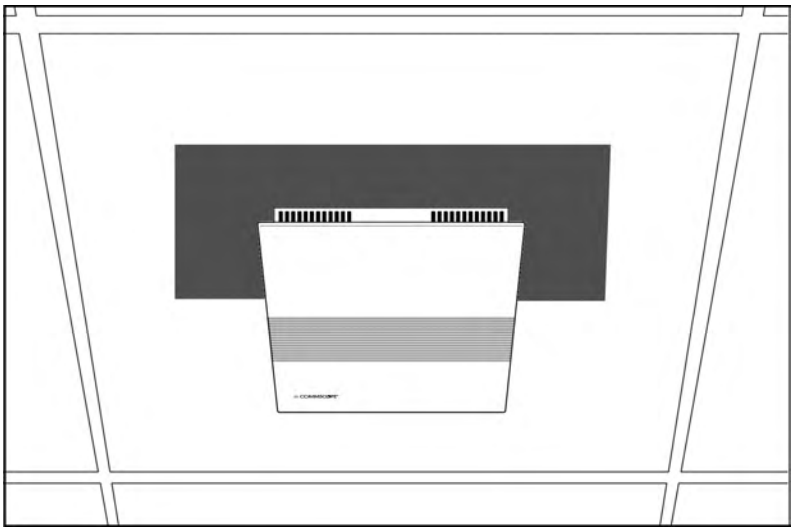

Mounting the Radio Point above the ceiling tile

1. Remove ceiling tile from the overhead.

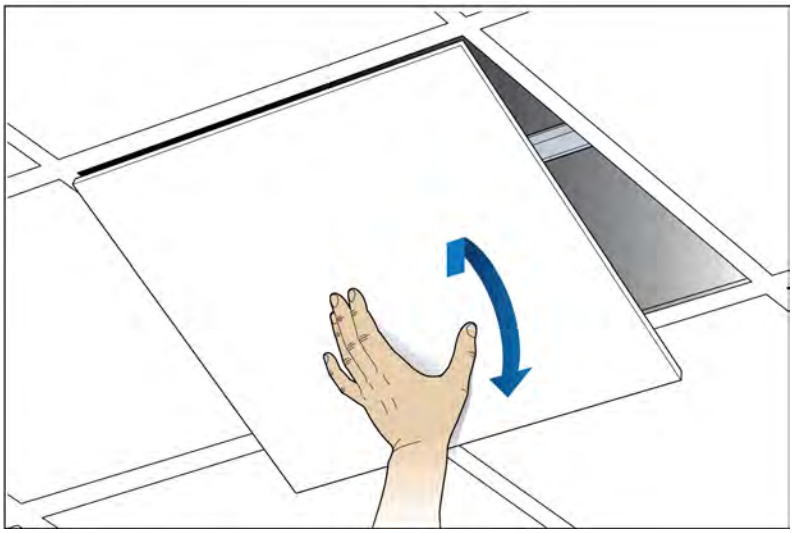

2. Attach the octagon box to the bracket.

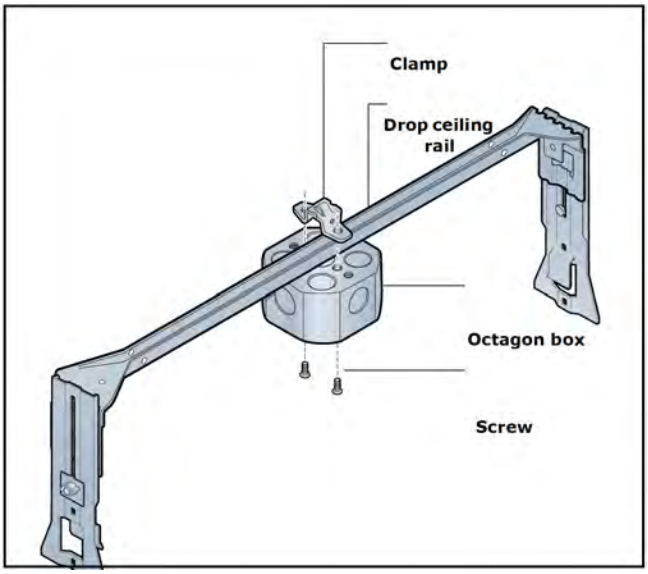

3. Attach the mounting plate to the Radio Point.

Note: Apply thread locking compound to screws prior to installation.

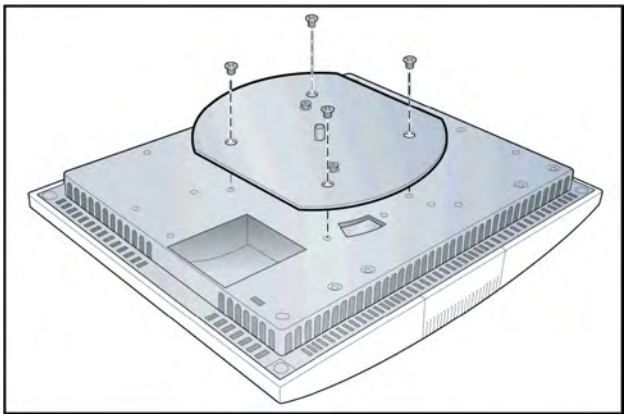

4. Attach the Radio Point to the octagon box.

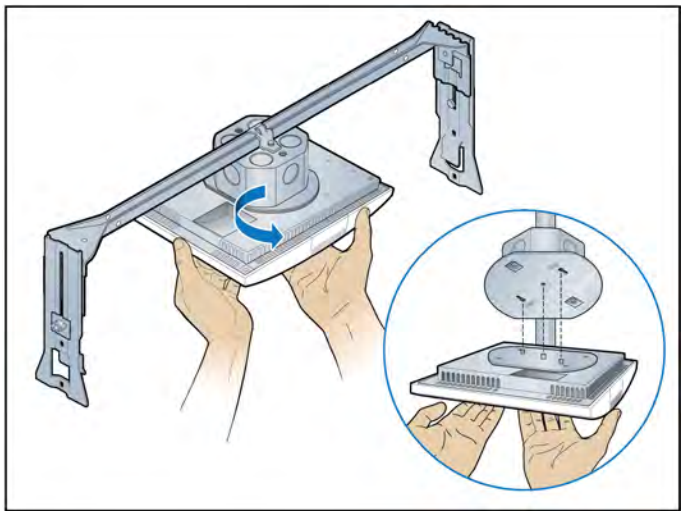

5. Install the drop rail assembly to the ceiling tile rail.

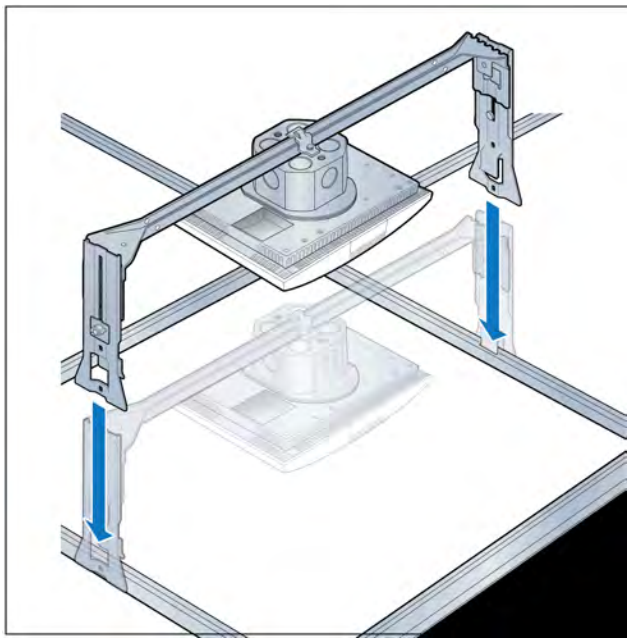

Note: The minimum clearance for cooling is 3 inches.

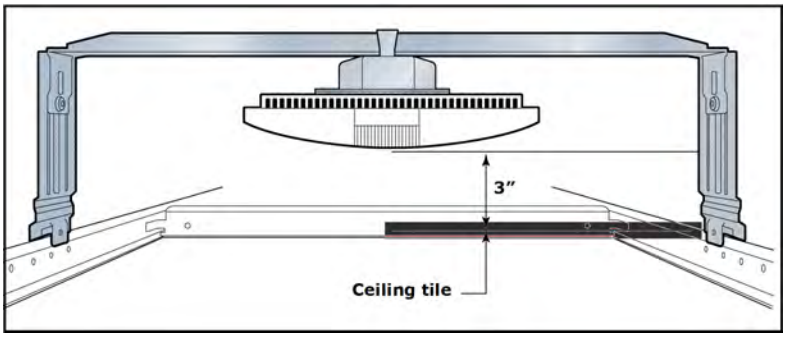

6. Connect Ethernet cable to RP.

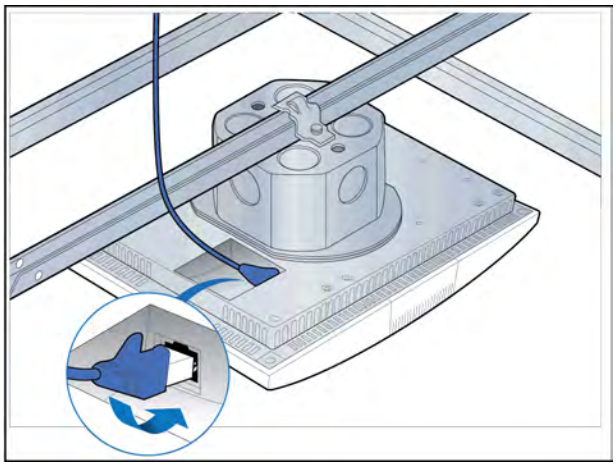

7. Replace the ceiling tile.

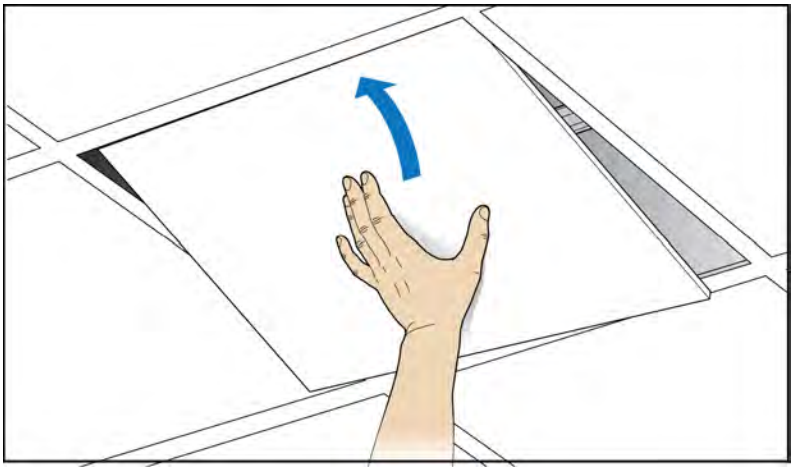

Flown mount

The Radio Point can be flown mounted on the end of a rod. This configuration is used for buildings where there are no drop ceilings.

Mounting the Radio Point (RP) in the flown configuration requires the hardware listed in Indoor Radio Point (RP2000) installation overview

FIGURE 16: CommScope supplied kit contents

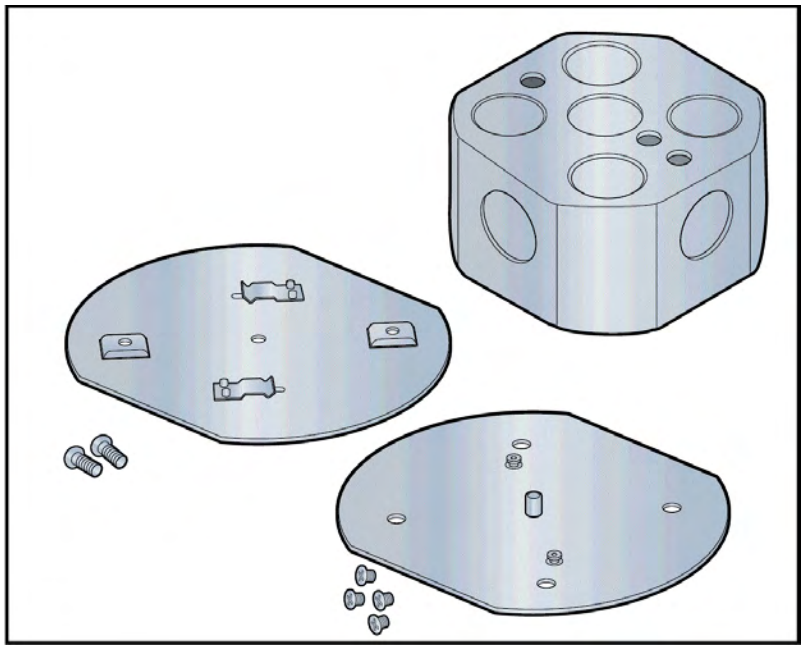

Mounting the Radio Point (RP) in the flown configuration requires the following hardware provided by the system integrator:

- Rod, 3/8-inch threaded
- 2 flat washers
- Nut
- Lock nut, nylon

Flown mount installation

1. Attach the threaded, 3/8-inch rod, cut to the required length, to the ceiling.
2. Install the nut and a flat washer on the rod.
3. Slide the octagon box onto the rod and install a flat washer and the nylon lock nut.

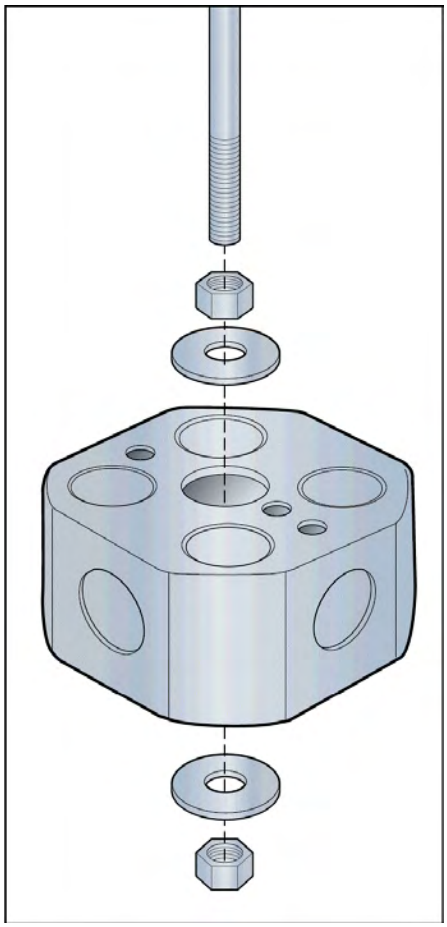

4. Attach the plate with two screws to the octagon box.

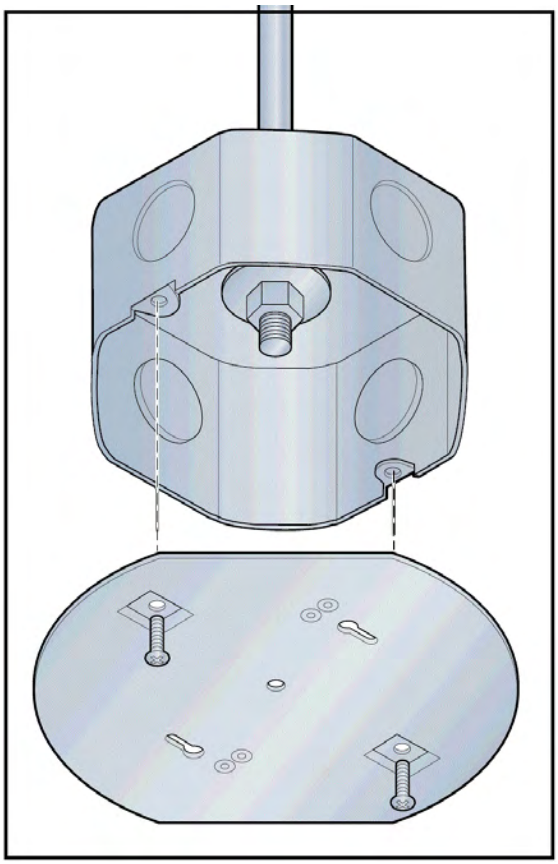

5. Attach the CommScope supplied mounting plate to the Radio Point with four screws.

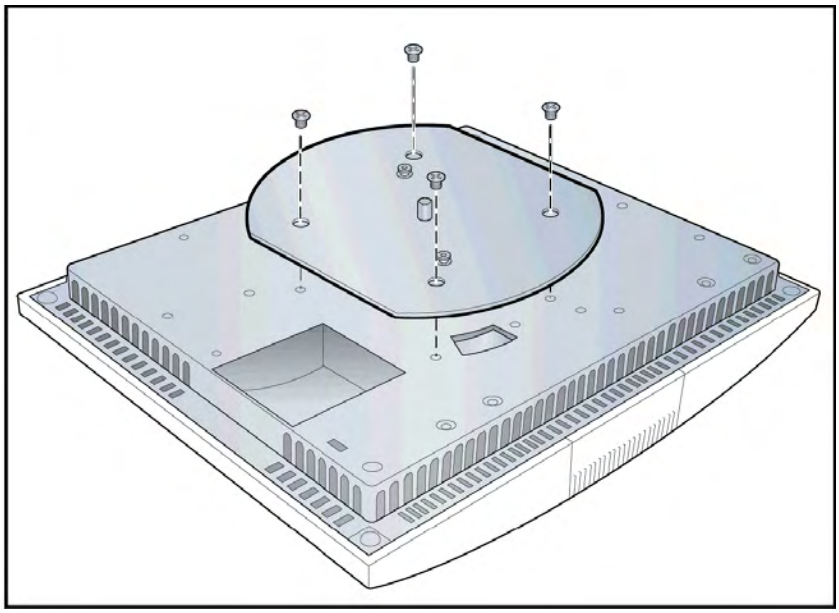

6. Attach the Radio Point to the octagon box.

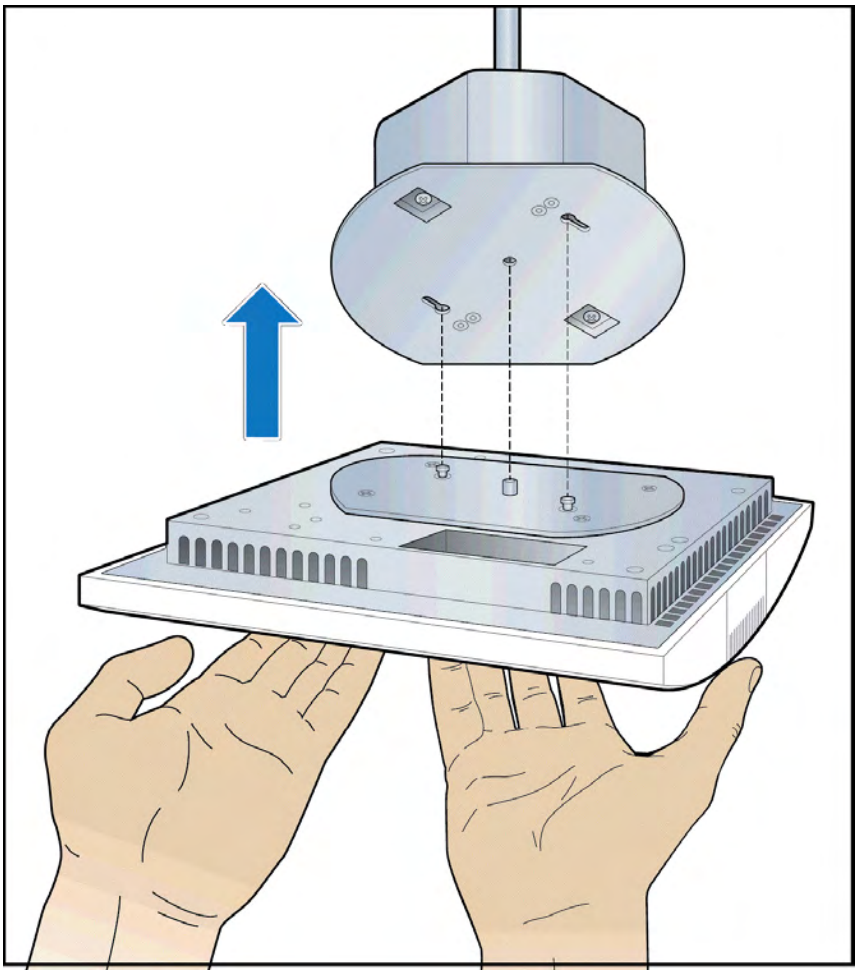

7. Secure the Radio Point to the octagon box plate.

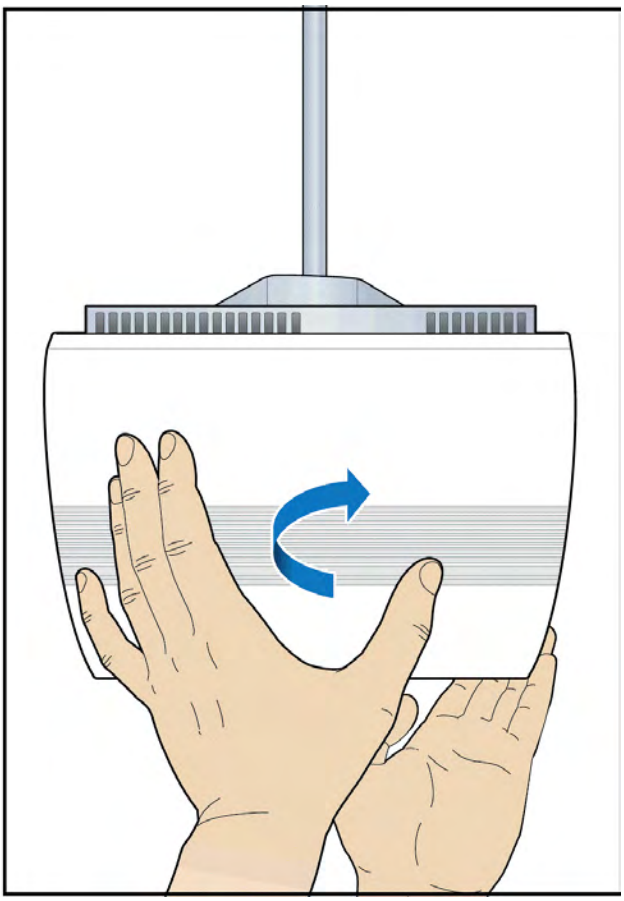

8. Connect the Ethernet cable to the Radio Point.

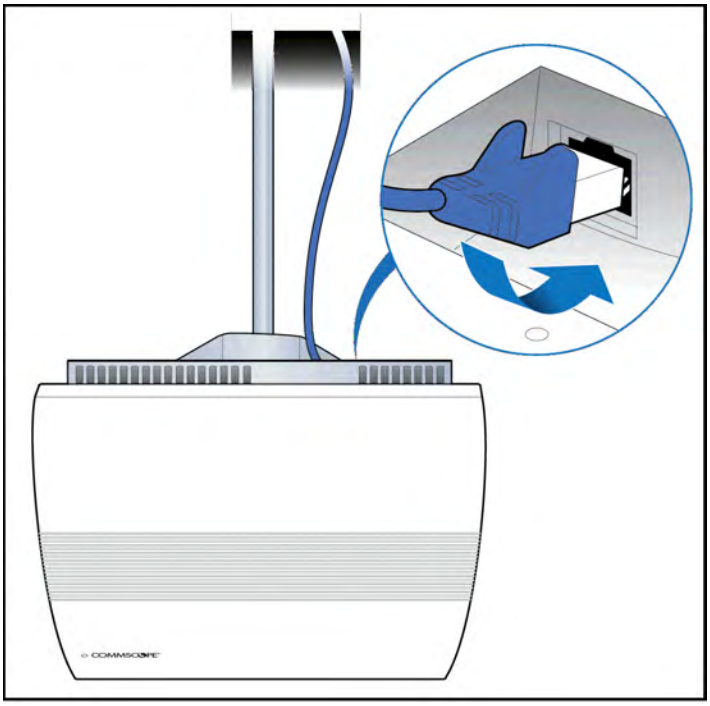

Installation is complete.

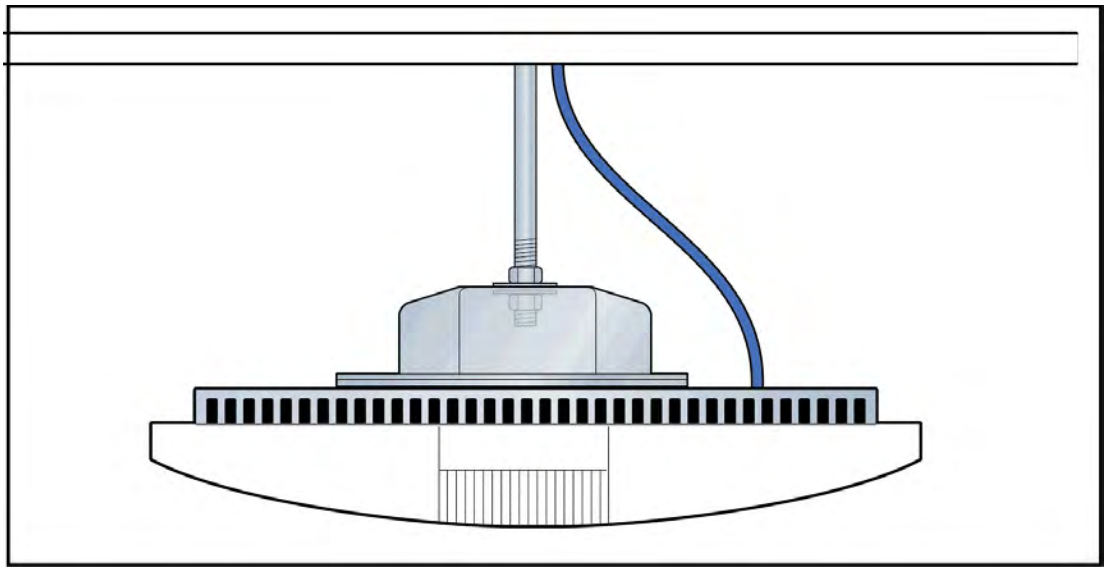

Pole mount

The Radio Point can be pole mounted. This configuration is used for building where there are no drop ceilings.

Mounting the Radio Point (RP) on a pole requires the following hardware provided by CommScope in the mounting kit:

- Mounting bracket
- 4 screws

FIGURE 17: Mounting bracket kit contents

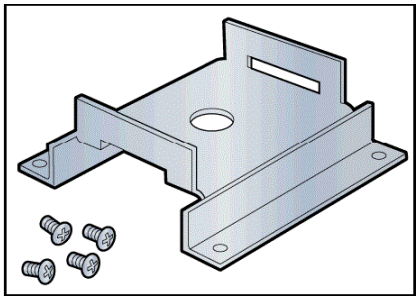

Mounting the Radio Point (RP) on a pole requires the following hardware provided by the system integrator:

- Adjustable clamp at least 2 inches larger than the circumference of the pole

Pole mount installation

1. Attach the bracket to the Radio point.

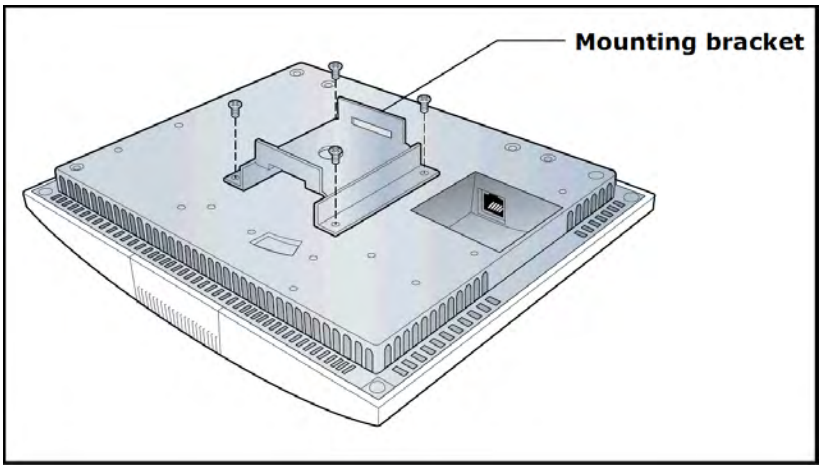

2. Slide the adjustable clamp through the slots on the Radio Point bracket.
3. Wrap the clamp around the pole and tighten the clamp screw to secure the Radio Point to the pole.

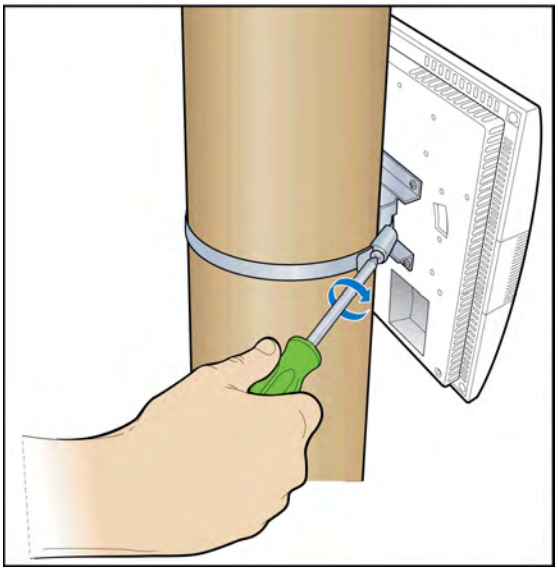

4. Connect the Ethernet cable to the Radio Point.

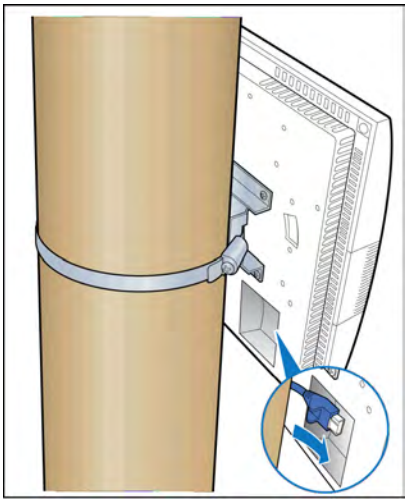

Installation is complete.

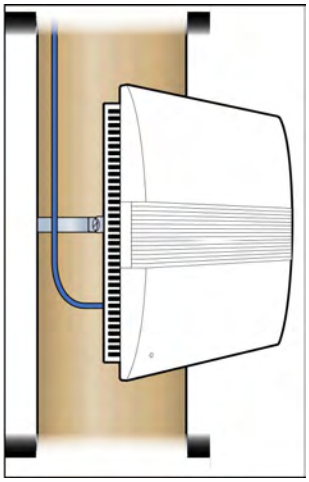

RP2100 Installation

Rugged Radio Point (RP2100) installation overview

This chapter describes installing Rugged Radio Points on poles and walls.

The Rugged Radio Point (RP) ships with the following hardware:

- Radio Point
- Mounting plate
- Mounting brackets
- Four tamper-resistant mounting screws (M5)
- RJ45, IP67 connector
- Two 4.3-10 antenna couplers

Note: A tamper-resistant T25 Torx bit, 1/4" hex shank, attached to a driver handle, is required to secure the tamper-resistant mounting screws.

Mounting the Radio Point (RP) on a pole requires the following hardware provided by the system integrator:

- Two adjustable clamps

Mounting the Radio Point (RP) on a wall requires the following hardware provided by the system integrator:

- Four molly screws capable – 50 lb (23 kg) minimum rating

Before installing the RP on the pole, terminate the RP end of the Ethernet cable with the RJ45, IP67 connector provided in the box.

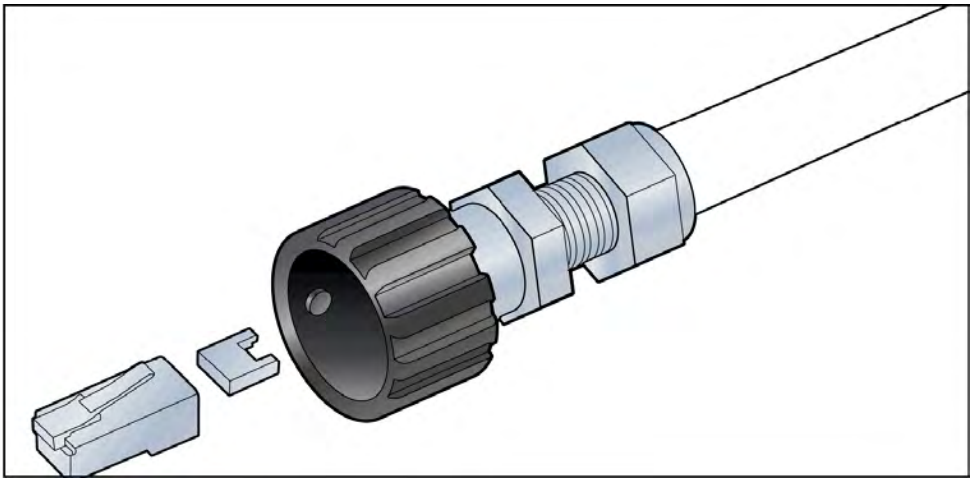

Note: Once the Radio Point is installed and the powered on, it may take up to 20 minutes for the frequency to stabilize and lock.

Pole mount installation

There are two orientations for pole mount installations:

- Vertical pole mount
- Horizontal pole mount

Note: The minimum pole diameter requirement is 4'' (102mm).

Vertical pole mount

1. Attach mounting brackets to mounting plate.

   Note: The torque requirement for the bracket mounting screws is 5-6 in-lbs.

2. Slide the adjustable clamp through the slots on each RP mounting bracket on the RP plate.

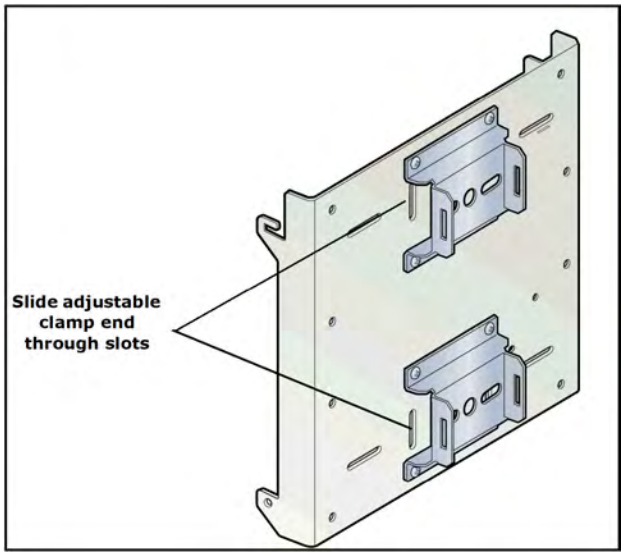

3. Wrap each clamp around the pole and tighten the clamp screw to secure the RP to the pole.

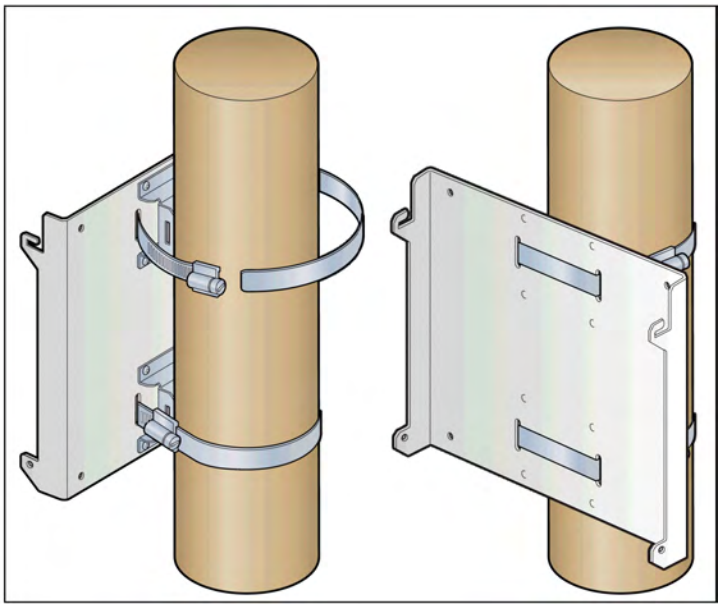

4. Insert two screws into the upper holes on opposite sides of the RP as shown in the drawing below.

CAUTION: Ensure that the RP is oriented correctly with the two antenna connectors at the top of the RP.

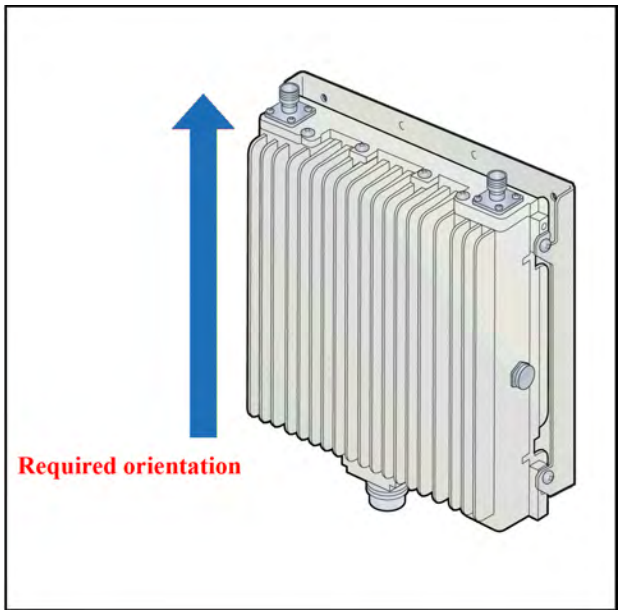

5. Hang the RP to the mounting bracket using the installed screws. Align holes at bottom location of bracket.

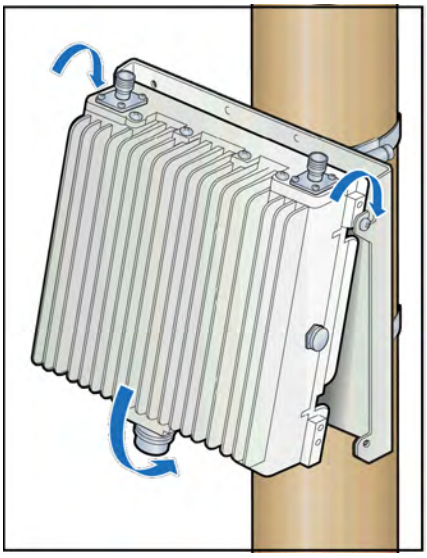

6. Insert and tighten the bottom screws through the plate hole into both sides of the RP. Be sure that all four screws are tightened.

Note: The torque requirement for the mounting screws is 20-21 in-lbs.

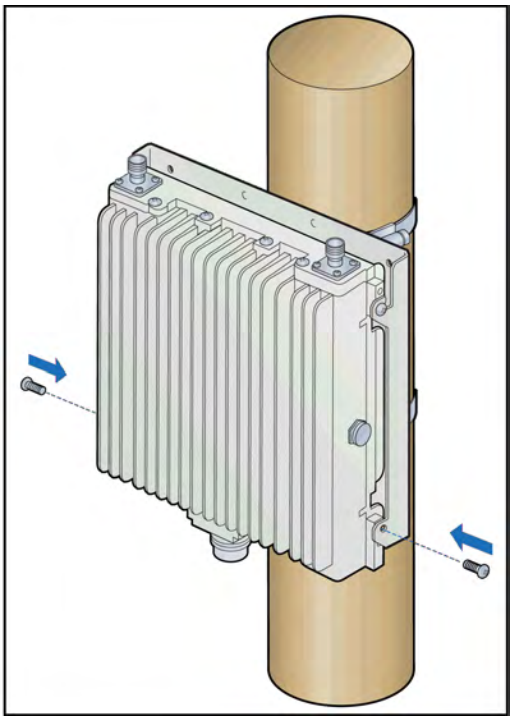

7. Connect the antenna couplers on the top of the RP.

Note: Check the antenna coupler manufacturer's documentation for torque requirements.

8. Connect the Ethernet cable RJ45 end to the bottom of the RP.

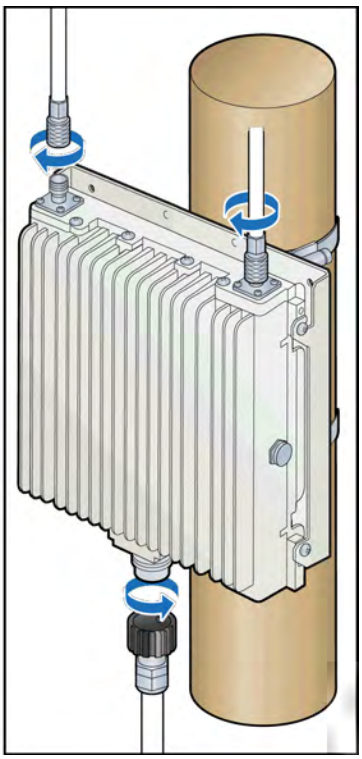

Horizontal pole mount

1. Attach mounting brackets to mounting plate.

Note: The torque requirement for the bracket mounting screws is 5-6 in-lbs.

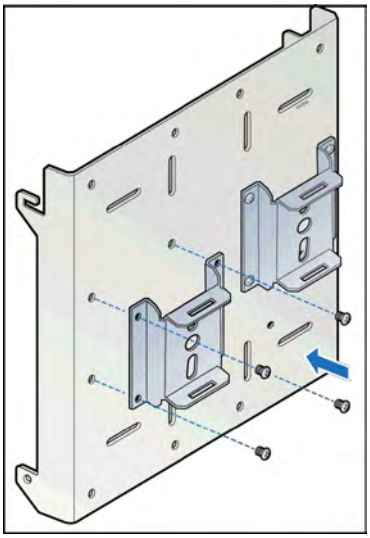

2. Slide the adjustable clamp through the slots on each RP mounting bracket on the RP plate.

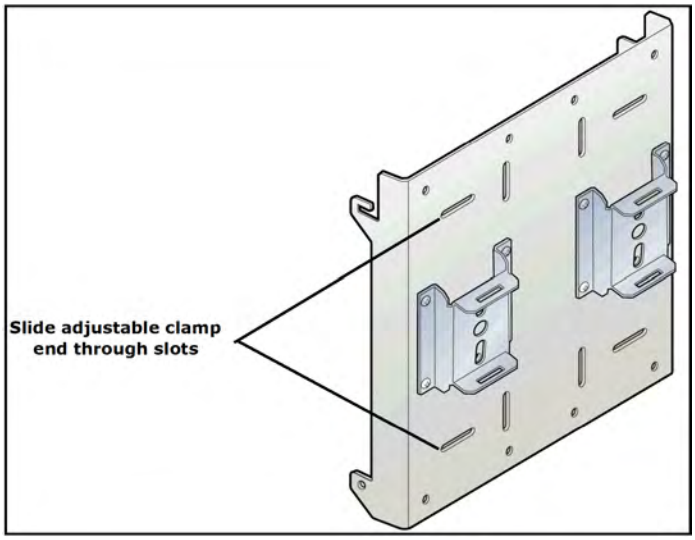

3. Wrap each clamp around the pole and tighten the clamp screw to secure the RP to the pole.

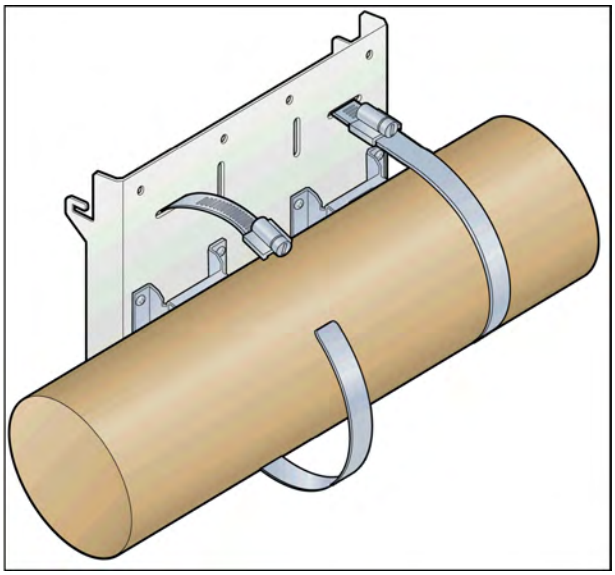

4. Insert two screws into the upper holes on opposite sides of the RP as shown in the drawing below.

CAUTION: Ensure that the RP is oriented correctly with the two antenna connectors at the top of the RP.

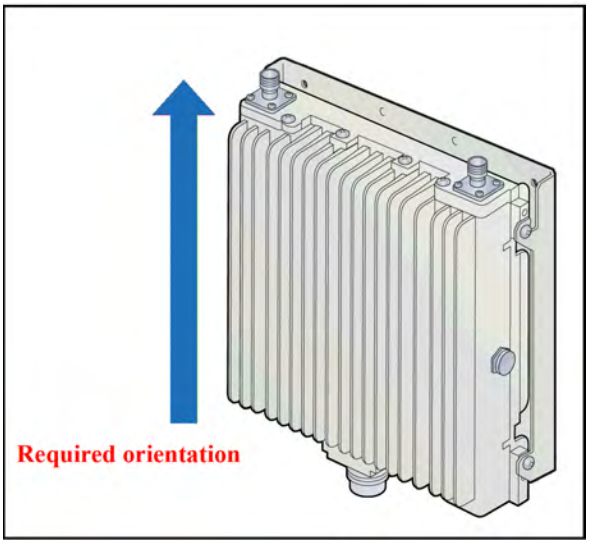

5. Hang the RP to the mounting bracket using the installed screws. Align holes at bottom location of bracket and install two additional screws.

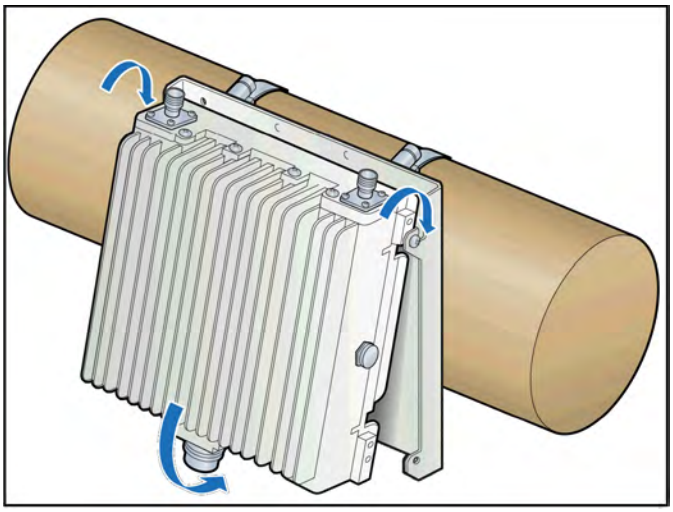

6. Insert and tighten the bottom screws through the plate hole into both sides of the RP. Be sure that all four screws are tightened.

Note: The torque requirement for the mounting screws is 20-21 in-lbs.

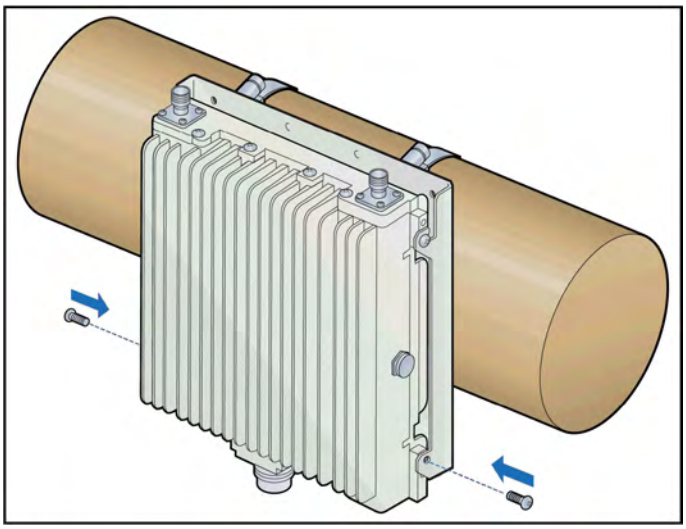

7. Connect the antenna couplers on the top of the RP.

Note: Check the antenna coupler manufacturer's documentation for torque requirements.

8. Connect the Ethernet cable RJ45 end to the bottom of the RP.

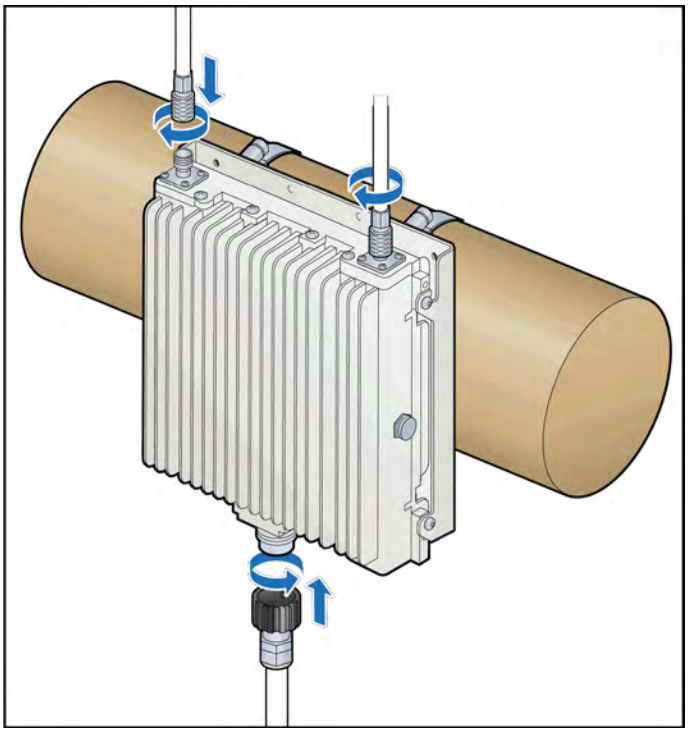

Wall mount installation

1. Drill four holes in the wall using the mounting plate to determine the hole locations. Mount the backplate on the wall with four molly screws.

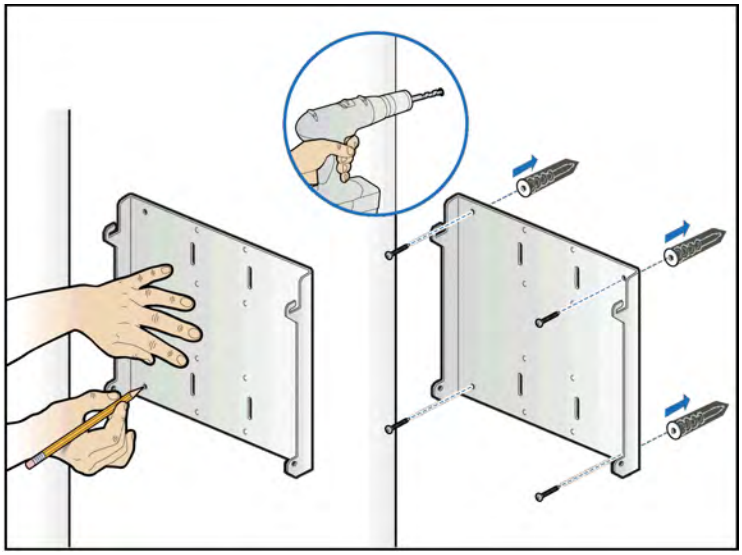

2. Insert two screws into the upper holes on opposite sides of the RP as shown in the drawing below.

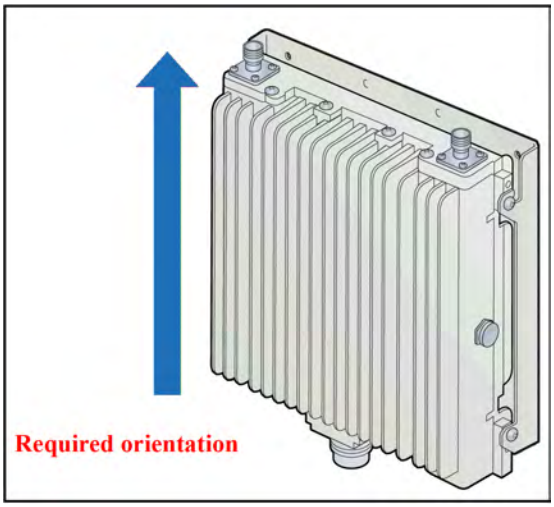

3. Attach the RP to the mounting plate. Tighten the top screws on the RP and insert and tighten the bottom screws on the RP.

Note: The torque requirement for the mounting screws is 20-21 in-lbs.

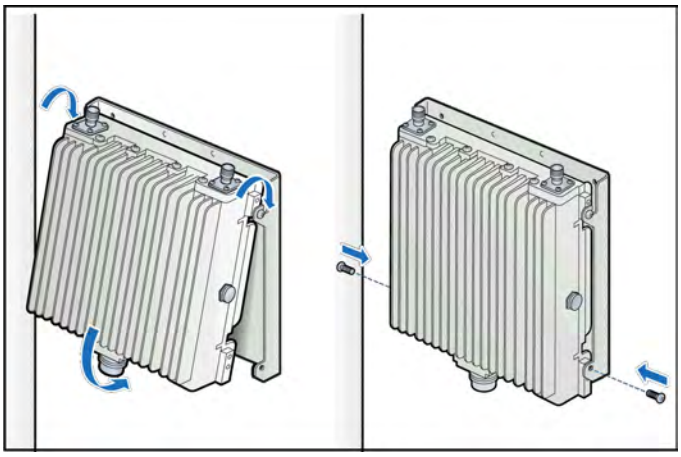

4. Insert and tighten the bottom screws through the plate hole into both sides of the RP.
5. Connect the antenna couplers on the top of the RP.

Note: Check the antenna coupler manufacturer's documentation for torque requirements.
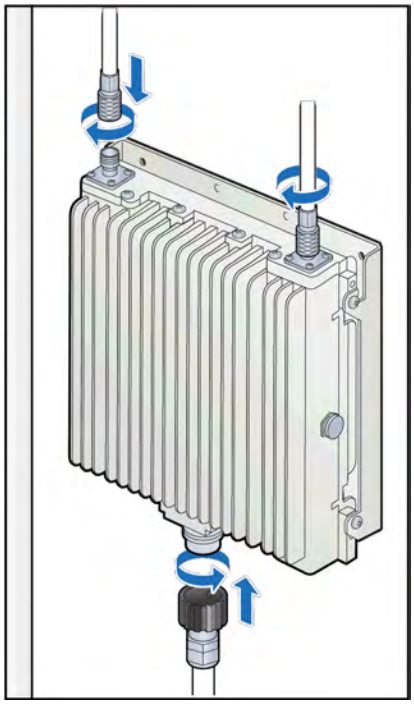
6. Connect the Ethernet cable RJ45 end to the bottom of the RP.