BEC AC867

QUICK INSTALL GUIDE

RidgeWave® 5GHz Subscriber Unit

WHAT'S IN THE BOX

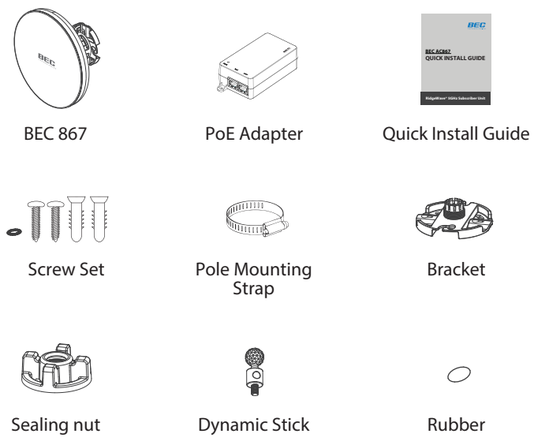

MINIMUM REQUIREMENTS

+ Broadband Internet Service
  (Cable or DSL Modem)
+ Internet Browser
  (Internet Explorer, Safari, Firefox, Chrome, Edge)

1 CONNECTING TO THE AC867

A) Remove the rear bottom panel.
B) Connect one end of the Ethernet cable into the WAN/PoE IN port of the AC867 and the other end to the PoE Port on the PoE Adapter.
C) Connect the Power cord to the PoE Adapter and plug the other end into an electrical outlet.
D) Connect the second Ethernet cable into the LAN port of the PoE Adapter and the other end to the Ethernet Port onto the computer to access and configure the AC867.
E) Place the panel removed from A) back into the AC867

Note:
1) The AC867 should ONLY be powered via Ethernet cable connected to the supplied PoE Adapter in the box.

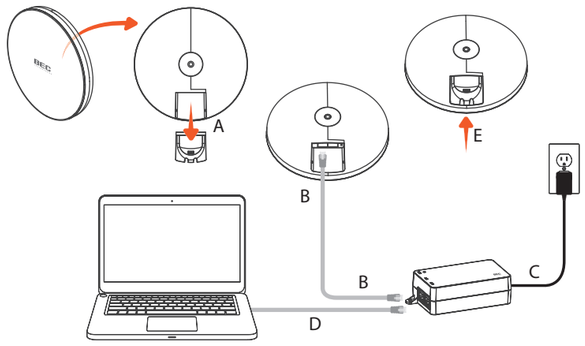

2 IP ADDRESS CONFIGURATION

A) On your computer
1. Go to **Start**. Click on **Control Panel**.
2. Click on **Network and Internet**
3. Select and click on **Change adapter settings** on the left window panel.
4. Then click **Local Area Connection**.
5. Select **Internet Protocol Version 4 (TCP/IPv4)** then click **Properties**.

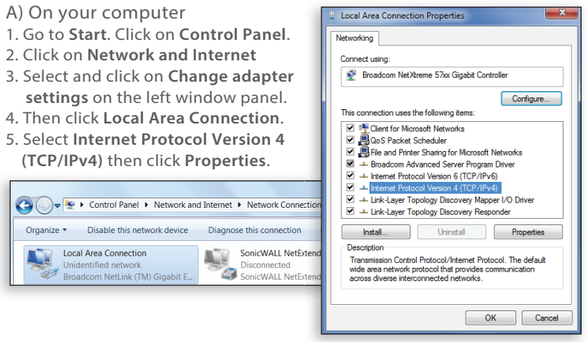

B) Assign and use a Static IP address from range between 192.168.1.2 ~192.168.1.254 to the computer.
(Example: 192.168.1.10 and the Subnet Mask address as 255.255.255.0.)

Note:
1) The default IP address of the AC867 is **192.168.1.1**.

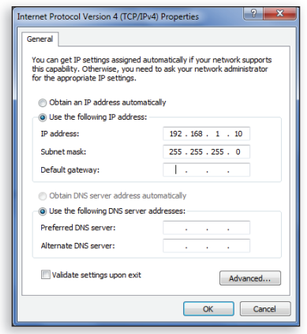

3 ACCESS TO THE AC867

A) To configure the AC867, open a web browser and type **192.168.1.1**in the URL address bar then click Enter.

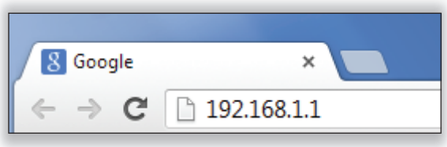

B) A login prompt will appear. By default, the login username and password of the AC867 is **admin** and **admin**.
Enter the correct usernamenand password then then click Login.

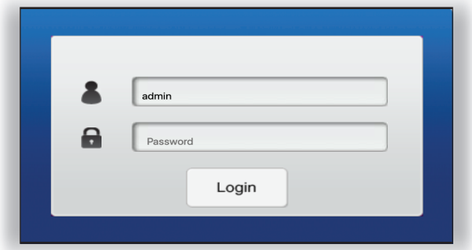

4 WI-FI MODES OPTIONS

A) The BEC AC867 can operate in the following modes: **Access Point**, **Client Bridge** and **WDS**.

B) Click on the **Operation Mode** link under the System Properties to change the Wi-Fi settings.

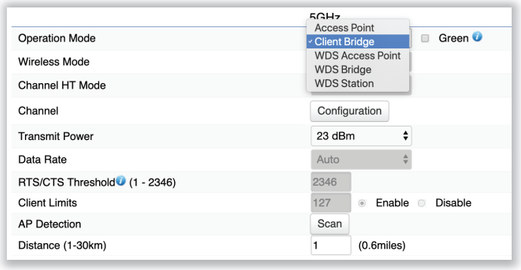

* It may take up to 90 seconds for AC867 to initially power up.

MOUNTING OPTION: TO A WALL

A) Put the included rubber into the bracket.
B) Plug the dynamic stick into the bracket.
C) Screw the sealing nut and assembled parts, as well as tighten it.
D) Put the nock washer on the dynamic stick.
E) Assemble the mounting parts to the AC867.

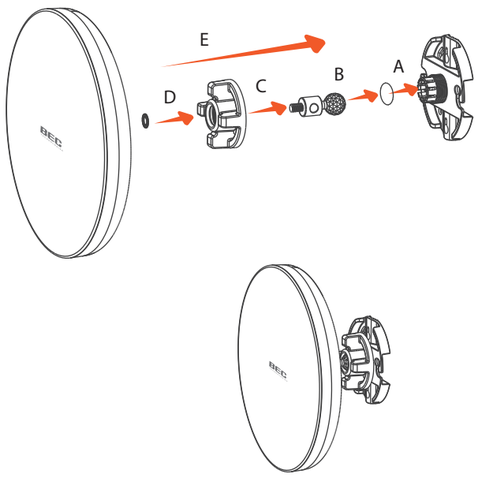

F) Determine the mounting location. Mark and drill two pilot holes aligning to the screw holes of the bracket.
G) Put wall anchors into the holes and insert screw to each the wall anchor.
H) Screw and secure the bracket in place.

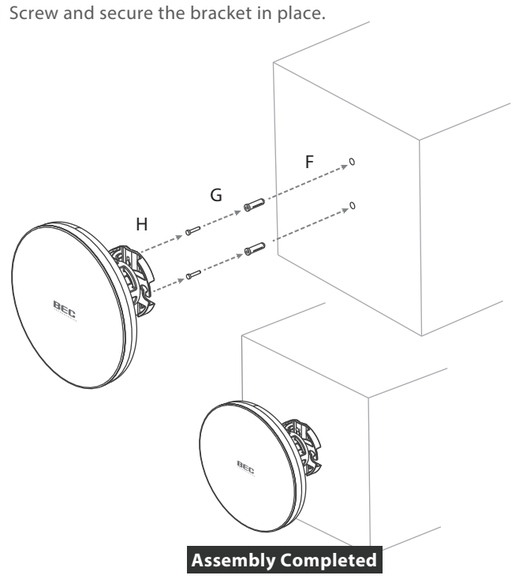

MOUNTING OPTION - ON A POLE

A) Put the included rubber into the bracket.
B) Plug the dynamic stick into the bracket.
C) Screw the sealing nut and assembled parts, as well as tighten it.
D) Put the nock washer on the dynamic stick.
E) Assemble the mounting parts to the CPE.

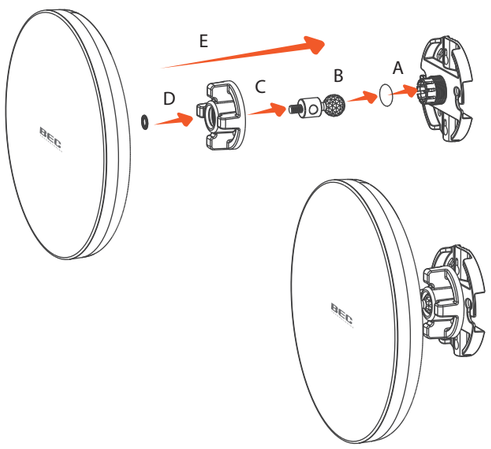

F) Thread the open end of the pole strap through the two tabs on the bracket.

G) Lock and tighten the pole strap to secure bracket to the pole.

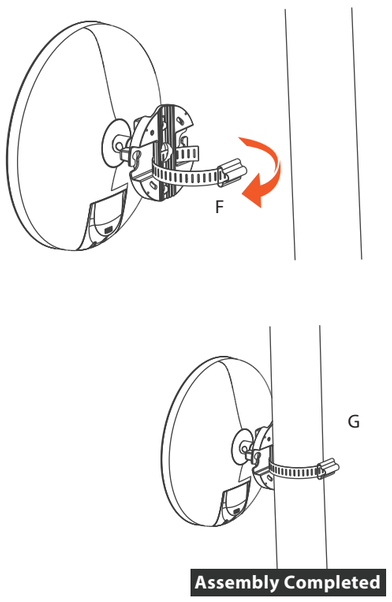

CONTACT US

For 24/7 BEC Support Portal: **https://bectechnologies.net/support/**
For Other Inquiries : **sales@bectechnologies.net**

BEC Technologies. Inc. | 3301 Matrix Drive Ste 200. Richardson, TX 75082 USA
TEL : +1-972-422-0877 | FAX : +1-972-422-0886

FCC STATEMENT

This device complies with Part 15 of the FCC Rules. Operation is subject to the following two conditions: (1) This device may not cause harmful interference, and (2) this device must accept any interference received, including interference that may cause undesired operation.
This equipment has been tested and found to comply with the limits for a Class B digital device, pursuant to Part 15 of the FCC Rules. These limits are designed to provide reasonable protection against harmful interference in a residential installation. This equipment generates, uses and can radiate radio frequency energy and, if not installed and used in accordance with the instructions, may cause harmful interference to radio communications. However, there is no guarantee that interference will not occur in a particular installation. If this equipment does cause harmful interference to radio or television reception, which can be determined by turning the equipment off and on, the user is encouraged to try to correct the interference by one of the following measures:
- Reorient or relocate the receiving antenna.
- Increase the separation between the equipment and receiver.
- Connect the equipment into an outlet on a circuit different from that to which the receiver is connected.
- Consult the dealer or an experienced radio/TV technician for help.

FCC Caution:
Any changes or modifications not expressly approved by the party responsible for compliance could void the user's authority to operate this equipment.
This transmitter must not be co-located or operating in conjunction with any other antenna or transmitter.

Radiation Exposure Statement:
This equipment complies with FCC radiation exposure limits set forth for an uncontrolled environment. This equipment should be installed and operated with minimum distance 25cm between the radiator & your body.

PROFESSIONAL INSTALLATION INSTRUCTION

1. Installation personal
This product is designed for specific application and needs to be installed by a qualified personal who has RF and related rule knowledge. The general user shall not attempt to install or change the setting.

2. Installation location
The product shall be installed at a location where the radiating antenna can be kept 25cm from nearby person in normal operation condition to meet regulatory RF exposure requirement.

3. External antenna
Use only the antennas which have been approved by the applicant. The non-approved antenna(s) may produce unwanted spurious or excessive RF transmitting power which may lead to the violation of FCC limit and is prohibited.

4. Installation procedure
Please refer to user's manual for the detail.

5. Warning
Please carefully select the installation position and make sure that the final output power does not exceed the limit set force in relevant rules. The violation of the rule could lead to serious federal penalty.

Maximum data rates are based on IEEE802.11 standards. Actual throughput and range may vary depending on many factors including environmental conditions, distance between devices, radio interference in the operating environment and mix of devices in the network. Features and specifications are subject to change without notice.
Copyright@ 2019 BEC Technologies Inc. All rights reserved.

v1.0