A company of SIM Tech

SIM7100C_User Manual_V1.01

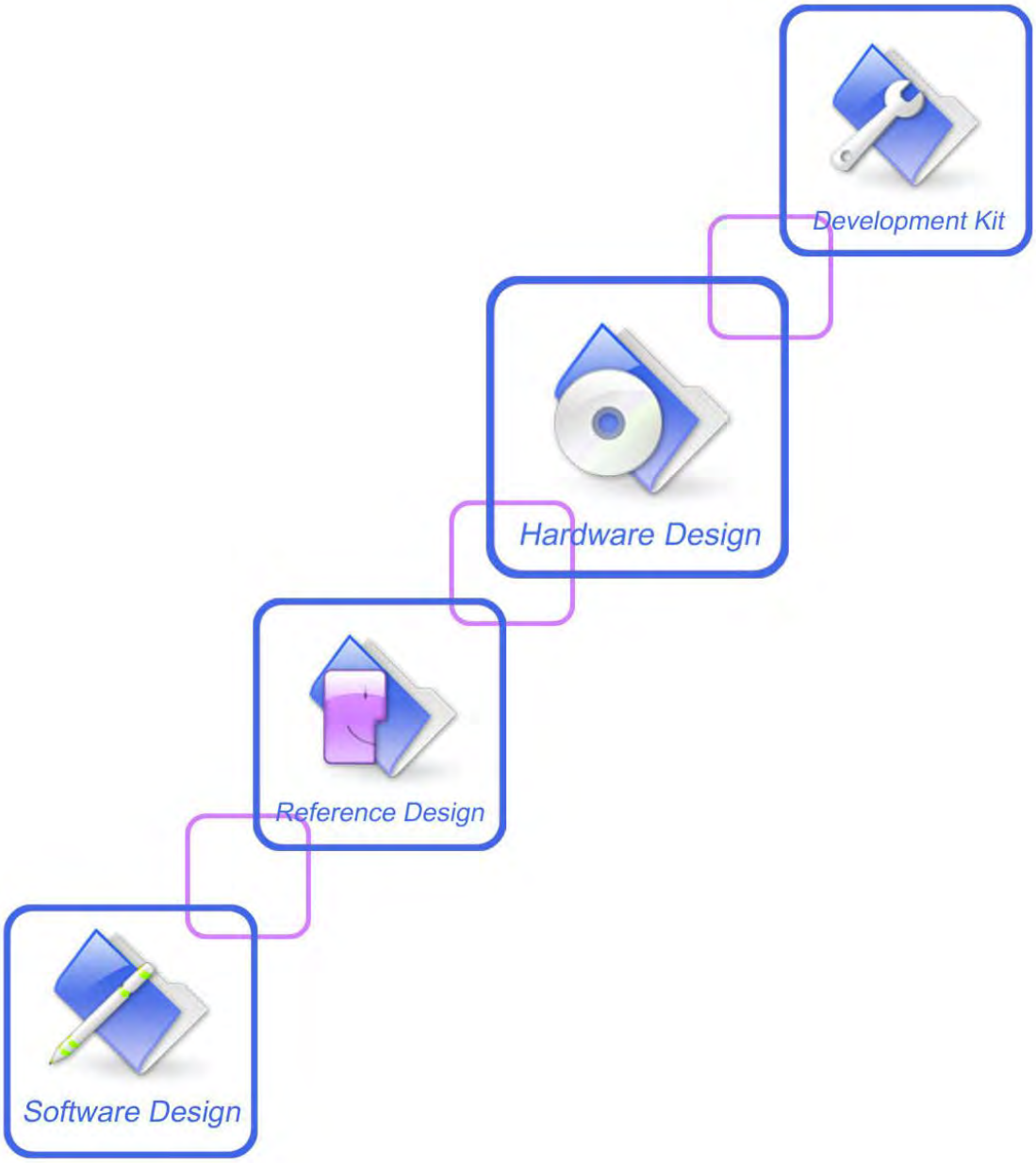

Document Title	SIM7100C_User Manual_V1.01
Version	1.01
Date	2015-09-19
Status	Draft
Document Control ID	SIM7100C_User Manual_V1.01

General Notes

SIMCom offers this information as a service to its customers, to support application and engineering efforts that use the products designed by SIMCom. The information provided is based upon requirements specifically provided to SIMCom by the customers. SIMCom has not undertaken any independent search for additional relevant information, including any information that may be in the customer's possession. Furthermore, system validation of this product designed by SIMCom within a larger electronic system remains the responsibility of the customer or the customer's system integrator. All specifications supplied herein are subject to change.

RF exposure statements:

Information to OEM integrator

The OEM integrator has to be aware not to provide information to the end user regarding how to install or remove this RF module in the user manual of the end product.

The user manual which is provided by OEM integrators for end users must include the following information in a prominent location.

1. To comply with FCC RF exposure compliance requirements, the antenna used for this transmitter must be installed to provide a separation distance of at least 20 cm from all persons and must not be co-located or operating in conjunction with any other antenna or transmitter, except in accordance with FCC multi-transmitter product procedures.
2. Only those antennas with same type and lesser gain filed under this FCC ID number can be used with this device.
3. The regulatory label on the final system must include the statement: "Contains FCC ID: xxxx or using electronic labeling method as documented in KDB 784748.
4. The final system integrator must ensure there is no instruction provided in the user manual or customer documentation indicating how to install or remove the transmitter module except such device has implemented two ways authentication between module and the host system.

This module can't be used on radio system and operation individually. Using others antenna must be re-testing and certification.

Copyright

This document contains proprietary technical information which is the property of SIMCom Limited, copying of this document and giving it to others and the using or communication of the contents thereof, are forbidden without express authority. Offenders are liable to the payment of damages. All rights reserved in the event of grant of a patent or the registration of a utility model or design. All specification supplied herein are subject to change without notice at any time.

Copyright © Shanghai SIMCom Wireless Solutions Ltd. 2014

SIMCOM CONFIDENTIAL FILE

SIMCOM CONFIDENTIAL FILE

Contents

SIM7100C_User Manual_V1.01 ..... **1**

Contents **4**

Table Index **7**

Figure Index **9**

Revision History **10**

1 Introduction **11**
1.1 Product Outline 11
1.2 Hardware Interface Overview 11
1.3 Hardware Diagram 11
1.4 Functional Overview 12

2 Package Information **13**
2.1 Pin Configuration 13
2.2 Pin description 16
2.3 Package Dimensions 20
2.4 Footprint Recommendation 23

3 Application Interface Specification **24**
3.1 Power Supply 24
3.1.1 Design Guide 24
3.1.2 Recommended Power supply circuit 25
3.1.3 Voltage monitor 26
3.2 Power on/Power off/Reset Time Sequence 26
3.2.1 Power on Sequence 26
3.2.2 Power off Sequence 28
3.2.3 Reset Function 29
3.3 UART Interface 30
3.3.1 RI Behavior 31
3.3.2 Design Guide 32
3.4 USB Interface 33
3.4.1 USB Application Guide 33
3.5 USIM Interface 35
3.5.1 USIM Pin description 35
3.5.2 USIM Application Guide 35
3.5.3 Recommend Components of USIM holder 36
3.6 PCM Interface 37
3.6.1 PCM Pin Description 38
3.6.2 PCM Signal Description 38
3.6.3 Auxiliary PCM (128 KHz PCM clock) 38
3.6.4 Primary PCM (2048 KHz PCM clock) 40
3.6.5 PCM Application Guide 41
3.7 MMC/SD and SDIO Interface 42

SIMCOM CONFIDENTIAL FILE

3.7.1 MMC/SD Interface Pin Description....42
3.7.2 SDIO Interface Pin Description....44
3.7.3 SD Design guide....44
3.8 I2C Interface....45
3.8.1 I2C Pin Description....45
3.8.2 I2C Signal Description....45
3.8.3 I2C Design Guide....45
3.9 Keypad Interface....45
3.9.1 Keypad Pin Description....45
3.9.2 Keypad Application Guide....46
3.10 SPI Interface....47
3.10.1 SPI Pin Description....47
3.11 GPIO Interface....48
3.11.1 GPIO Pin Description....48
3.12 Network status....50
3.13 Flight mode control....50
3.14 Multi-functional interface....51
3.14.1 Sink Current Source....51
3.14.2 ADC....52
3.14.3 LDO....53

4 RF Specification....54
4.1 RF Specification....54
4.2 Antenna Design Guide....56

5 Reliability and Operating Characteristics....59
5.1 Electronic Characteristics....59
5.2 Operating Mode....59
5.2.1 Operating Mode....59
5.2.2 Minimize Power Consumption....60
5.2.3 Sleep mode....60
5.2.4 Minimum functionality mode....61
5.3 Current Consumption....61
5.4 EMC and ESD Notes....61

6 Guide for Production....62
6.1 Top and Bottom View of SIM7100C....62
6.2 Typical Solder Reflow Profile....62
6.3 Moisture Sensitivity Level (MSL)....63
6.4 Stencil Foil Design Recommendation....64

Appendix....65
A. Reference Design....65
B. SIM7100C GPIOs List....66
C. Digital I/O Characteristics....66
D. Related Documents....67

SIMCOM CONFIDENTIAL FILE

E. Terms and Abbreviations..... 68
F. Safety Caution..... 70

Contact us:.....72

Shanghai SIMCom Wireless Solutions Ltd..... 72

SIMCOM CONFIDENTIAL FILE

Table Index

Table 1: SIM7100C series frequency bands.... 11
Table 2: General Feature.... 12
Table 3: Coding schemes and maximum net data rates over air interface.... 13
Table 4: Pin definition.... 15
Table 5: IO Parameters Definition.... 16
Table 6: Pin description.... 16
Table 7: VBAT Pin description.... 24
Table 8: Recommended zener diode models.... 25
Table 9: Power on timing.... 28
Table 10: Power off timing.... 29
Table 11: RESET Pin Electronic Characteristic.... 30
Table 12: UART Pin description.... 30
Table 13: UART Pin Logic level.... 31
Table 14: USB Pin description.... 33
Table 15: USIM Pin description.... 35
Table 16: USIM Electronic characteristic.... 35
Table 17: Amphenol USIM socket pin description.... 37
Table 18: PCM Pin description.... 38
Table 19: PCM Electronic characteristic.... 38
Table 20: Timing parameters.... 39
Table 21: Timing parameters.... 41
Table 22: MMC/SD Pin description.... 42
Table 23: MMC/SD Electronic characteristic*.... 43
Table 24: SDIO Pin description.... 44
Table 25: SDIO Electronic characteristic.... 44
Table 26: I2C Pin description.... 45
Table 27: Keypad Pin description.... 45
Table 28: Keypad multiplexing function.... 46
Table 29: SPI Pin description.... 47
Table 30: SPI Electronic characteristic.... 47
Table 31: GPIO Pin description.... 48
Table 32: GPIO Electronic characteristic.... 48
Table 23: LED status.... 50
Table 34: Flight mode status.... 51
Table 35: Sink Current Electronic characteristic.... 51
Table 36: Electronic Characteristics.... 52
Table 37: Electronic characteristic.... 53
Table 38: Conducted transmission power.... 54
Table 39: Operating frequencies.... 54
Table 40: E-UTRA operating bands.... 54
Table 41: Conducted receive sensitivity.... 55
Table 42: Reference sensitivity (QPSK).... 57
Table 43: Absolute maximum ratings.... 59

SIMCOM CONFIDENTIAL FILE

Table 44: Recommended operating ratings..... 59
Table 45: Operating temperature..... 59
Table 46: Operating mode..... 59
Table 47: Current consumption..... 61
Table 48: The ESD performance measurement table (Temperature: 25℃, Humidity: 45%).....61
Table 49: Moisture sensitivity level and floor life.....63
Table 50: SIM7100C GPIOs list.....66
Table 51: Digital I/O characteristics.....66
Table 52: Related documents.....67
Table 53: Terms and Abbreviations..... 68
Table 54: Safety caution.....70

SIMCOM CONFIDENTIAL FILE

Figure Index

Figure 1: SIM7100C functional architecture....14
Figure 2: Pin view....14
Figure 3: Top dimensions (Unit: mm)....20
Figure 4: Side dimensions (Unit: mm)....21
Figure 5: Bottom dimensions (Unit: mm)....22
Figure 6: Footprint recommendation (Unit: mm)....23
Figure 7: VBAT input application circuit....24
Figure 8: Reference circuit of the LDO power supply....25
Figure 9: Reference circuit of the DCDC power supply....26
Figure 10: Power on Timing Sequence....27
Figure 11: Power off timing sequence....29
Figure 12: Reset circuit....30
Figure 13: RI behaviour in NULL Modem....31
Figure 14: RI behaviour in FULL Modem....32
Figure 15: UART Full modem....32
Figure 16: UART Null modem....32
Figure 17: Reference circuit of level shift....33
Figure 18: USB Reference Circuit with SIM7100C as USB Host Controller....34
Figure 19: USIM interface reference circuit....36
Figure 20: Amphenol SIM card socket....37
Figure 21: Synchrony timing....39
Figure 22: EXT CODEC to MODULE timing....39
Figure 23: MODULE to EXT CODEC timing....39
Figure 24: Synchrony timing....40
Figure 25: EXT CODEC to MODULE timing....41
Figure 26: MODULE to EXT CODEC timing....41
Figure 27: Reference Circuit of PCM Application with Audio Codec....42
Figure 28: SD interface circuit....44
Figure 29: Reference circuit....46
Figure 30: Application circuit....50
Figure 31: Flight mode switch....51
Figure 32: Current drive....52
Figure 33: Antenna matching circuit (MAIN_ANT)....56
Figure 34: Antenna matching circuit (AUX_ANT)....57
Figure 35: Active antenna circuit....57
Figure 36: Passive antenna circuit (Default)....57
Figure 37: Top and bottom view of SIM7100C....62
Figure 38: The ramp-soak-spike reflow profile of SIM7100C....63
Figure 39: Reference design....65

SIMCOM CONFIDENTIAL FILE

Revision History

Data	Version	Description of change	Author
2015-09-11	1.01	Original	Yang Hongliang Li Ya

SIMCOM CONFIDENTIAL FILE

1 Introduction

This document describes electronic specifications, RF specifications, function interface, mechanical characteristic and testing conclusions of the SIMCom SIM7100C module. With the help of this document and other SIM7100C software application notes, user guides, users can quickly understand and use SIM7100C module to design and develop applications quickly.

1.1 Product Outline

Designed for global market, SIM7100C is TD-LTE band41, User can choose the module based on the wireless network configuration. In this document, the entire radio band configuration of SIM7100C series is described in the following table.

Table 1: SIM7100C series frequency bands

Standard	Frequency	SIM7100C
	LTE TDD B41 (100M BW)	✓

With a tiny configuration of 30*30*2.9 mm and integrated functions, SIM7100C can meet almost any space requirement in users' application, such as Smart phone, PDA phone, industrial handhelds, machine-to-machine, vehicle applications, etc.

There are 87 pins on SIM7100C, which provide most application interfaces for customers' board.

1.2 Hardware Interface Overview

Sub-interfaces are described in detail in the next chapter, which includes:

- **Power Supply**
- **USB Interface**
- **UART Interface**
- **MMC/SD and SDIO Interfaces**
- **USIM Interface**
- **GPIO**
- **ADC**
- **LDO Power Output**
- **Current Sink Source**
- **PCM Interface**
- **Keypad Interface**
- **SPI Interface**
- **I2C Interface**

SIMCOM CONFIDENTIAL FILE

1.3 Functional Overview

Table 2: General Feature

Feature	Implementation
Power supply	Single supply voltage 3.4～4.2V
Power Save mode	TBD
Frequency bands	Please refer to table 1.
Transmitting power	UMTS: ● Class 3 (0.25W): LTE
Connectivity Speed	● LTE Category 3 - 100 Mbps (DL) ● LTE Category 3 - 50 Mbps (UL)
Rx-diversity	Support UMTS/LTE Rx-diversity.
GNSS	● GNSS engine (GPS and GLONASS) ● Protocol: NMEA ● Mobile-assisted mode ● Mobile-based mode ● Standalone mode
SMS	● MT, MO, CB, Text and PDU mode ● SMS storage: USIM card or ME(default) ● Support transmission of SMS alternatively over CSD or GPRS. User can choose preferred mode.
USIM interface	Support identity card: 1.8V, 3V.
USIM application toolkit	Support SAT class 3, GSM 11.14 Release 98 Support USAT
Phonebook management	Support phonebook types: SM, FD, LD, RC, ON, MC.
Audio features	Support digital audio interface: PCM interface. ● Used for analog audio function with external codec. ● Support long frame sync and short frame sync. ● Support 8-bit A-law, μ-law and 16-bit linear data formats. ● Support master and slave mode, but must be the master in long frame sync.
UART interface	● Default one Full modem serial port ● 1200bps to 460800bps. ● Can be used for AT commands or data stream. ● Support RTS/CTS hardware handshake and software ON/OFF flow control. ● Multiplex ability according to GSM 07.10 Multiplexer Protocol. ● Autobauding supports baud rate from 1200 bps to 115200bps. ● upgrading firmware
MMC/SD/SDIO	● Two secure digital controller (SDC) ports up to 52MHz: ● support MMC and SD cards with 1.8 V or 2.95 V on SD1 ● support SDIO with1.8 V only on SD2
USB	USB 2.0 specification-compliant as a peripheral or embedded host
Firmware upgrade	Firmware upgrade over USB interface

Physical characteristics	Size:30*30*2.9mm Weight:5.7 g
Temperature range	● Normal operation temperature: -30°C to +80°C ● Extended operation temperature: -40°C to +85°C ● Storage temperature -45°C to +90°C

Table 3: Coding schemes and maximum net data rates over air interface

LTE-FDD device category (Downlink)	**Max data rate（peak）**	**Modulation type**
Category 1	10Mbps	QPSK/16QAM/64QAM
Category 2	50Mbps	QPSK/16QAM/64QAM
Category 3	100Mbps	QPSK/16QAM/64QAM
Category 4	150Mbps	QPSK/16QAM/64QAM
LTE-TDD device category (Uplink)	**Max data rate（peak）**	**Modulation type**
Category 1	5Mbps	QPSK/16QAM
Category 2	25Mbps	QPSK/16QAM
Category 3	50Mbps	QPSK/16QAM
Category 4	50Mbps	QPSK/16QAM

2 Package Information

2.1 Pin Configuration

All hardware interfaces which connect SIM7100C to customers' application platform are through 87 pins pads (Metal half hole). Figure 2 is SIM7100C outline diagram.

SIMCOM CONFIDENTIAL

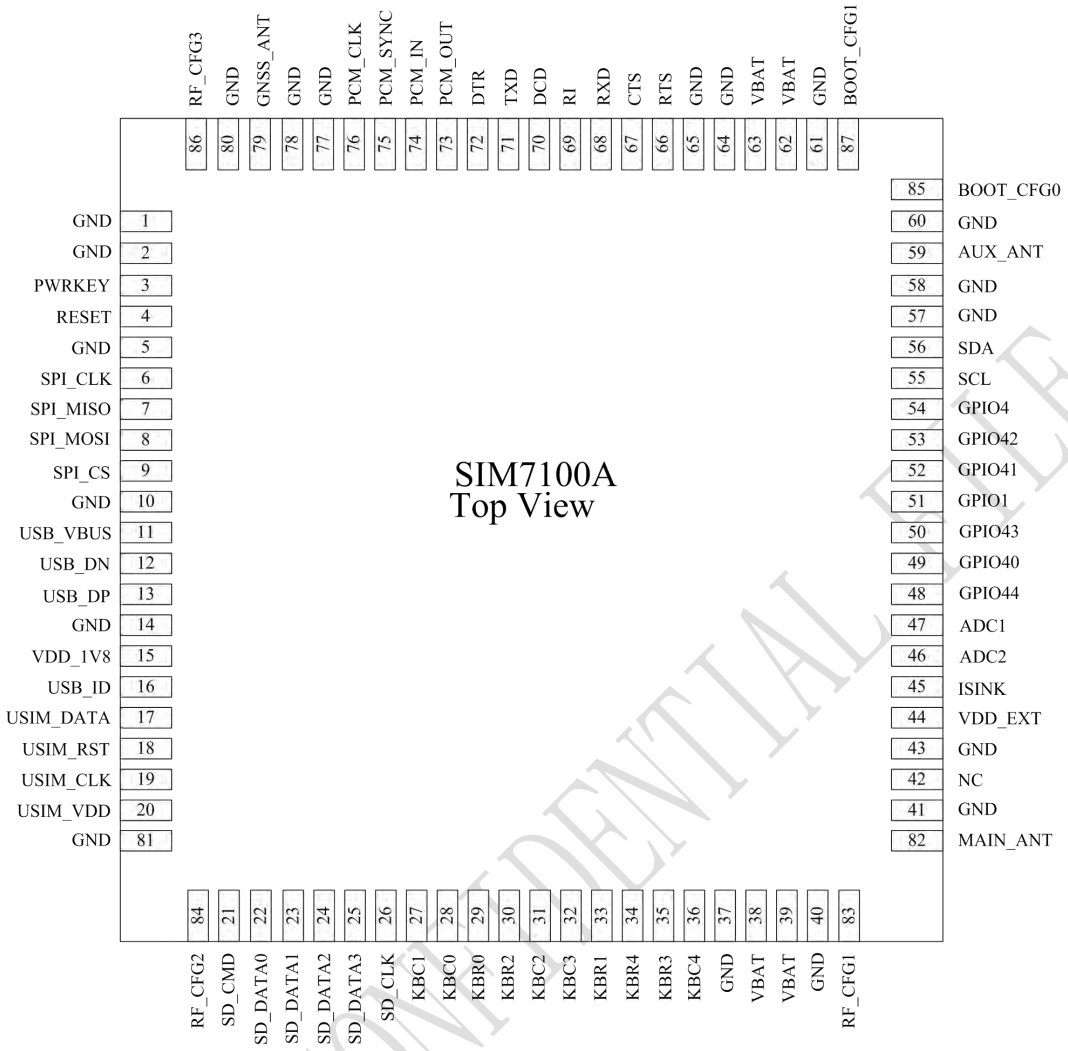

Figure 1: Pin view

SIMCOM CONFIDENTIAL FILE

Table 4: Pin definition

Pin No.	Define	Pin No.	Define
1	GND	2	GND
3	PWRKEY	4	RESET
5	GND	6	SPI_CLK
7	SPI_MISO	8	SPI_MOSI
9	SPI_CS	10	GND
11	USB_VBUS	12	USB_DN
13	USB_DP	14	GND
15	VDD_1V8	16	USB_ID
17	USIM_DATA	18	USIM_RST
19	USIM_CLK	20	USIM_VDD
21	SD_CMD	22	SD_DATA0
23	SD_DATA1	24	SD_DATA2
25	SD_DATA3	26	SD_CLK
27	KBC1	28	KBC0
29	KBR0	30	KBR2
31	KBC2	32	KBC3
33	KBR1	34	KBR4
35	KBR3	36	KBC4
37	GND	38	VBAT
39	VBAT	40	GND
41	GND	42	NC
43	GND	44	VDD_EXT
45	ISINK	46	ADC2
47	ADC1	48	GPIO44
49	GPIO40	50	GPIO43
51	GPIO1	52	GPIO41
53	GPIO42	54	GPIO4
55	SCL	56	SDA
57	GND	58	GND
59	AUX_ANT	60	GND
61	GND	62	VBAT
63	VBAT	64	GND
65	GND	66	RTS
67	CTS	68	RXD

69	RI	70	DCD
71	TXD	72	DTR
73	PCM_OUT	74	PCM_IN
75	PCM_SYNC	76	PCM_CLK
77	GND	78	GND
79	GNSS_ANT	80	GND
81	GND	82	MAIN_ANT
83	RF_CFG1	84	RF_CFG2
85	BOOT_CFG0	86	RF_CFG3
87	BOOT_CFG1		

2.2 Pin description

Table 5: IO Parameters Definition

Pin Type	Description
PI	Power input
PO	Power output
IO	Bidirectional input / output
DI	Digital input
DO	Digital output
AI	Analog input

Table 6: Pin description

Pin name	Pin No.	I/O	Description	Comment
Power Supply				
VBAT	38,39, 62,63	PI	Power supply voltage	
NC	42		No connection	Please keep open
VDD_EXT	44	PO	LDO power output for SD card circuit or other external circuit with MAX. 150mA output. This LDO output voltage can be changed by the AT command “AT+CVAUXV”.	If unused, please keep open.
VDD_1V8	15	PO	1.8V SMPS output for external circuit, such as level shift circuit.	Recommend placing a 10uF and 100nF capacitors to improve the stability of the internal 1.8V SMPS circuit.
GND	1,2,5,10		Ground	

	,14,37,40,41,43,57,58,60,61,64,65,77,78,80,81			
Power on/off				
PWRKEY	3	DI	PWRKEY should be pulled low at least 180ms to power on or 500ms to power off the module.	PWRKEY has been pulled up to 1.8V in the module.
SD interface				
SD_CMD	21	I/O	SDIO command	If unused, please keep open.
SD_DATA0	22	I/O	SDIO data	
SD_DATA1	23	I/O	SDIO data	
SD_DATA2	24	I/O	SDIO data	
SD_DATA3	25	I/O	SDIO data	
SD_CLK	26	DO	SDIO clock	
USIM interface				
USIM_DATA	17	I/O	SIM Data Output/Input	All signals of SIM interface should be protected against ESD/EMC.
USIM_RST	18	DO	SIM Reset	
USIM_CLK	19	DO	SIM Clock	
USIM_VDD	20	PO	Voltage Supply for SIM card Support 1.8V or 3V SIM card	
SPI interface				
SPI_CLK	6	DO	SPI clock	If unused, please keep open.
SPI_MISO	7	DI	SPI (master only) master in/slave out data	
SPI_MOSI	8	DO	SPI(master only) master out/slave in data	
SPI_CS	9	DO	SPI chip-select	
USB				
USB_VBUS	11	DI	Valid USB detection input	
USB_DN	12	I/O	Negative line of the differential, bi-directional USB signal to/from the peripheral device.	
USB_DP	13	I/O	Positive line of the differential, bi-directional USB signal to/from the peripheral device.	

USB_ID	16	DI	High-speed USB ID	If SIM7100C is peripheral (USB device), please keep it open. If SIM7100C is USB host, please connect to GND directly.
UART **interface**				
RTS	66	DO	Request to send	
CTS	67	DI	Clear to Send	
RXD	68	DI	Receive Data	
RI	69	DO	Ring Indicator	
DCD	70	DO	Carrier detects	
TXD	71	DO	Transmit Data	
DTR	72	DI	DTE get ready	
I2C interface				
SCL	55	DO	I2C clock output	Please place 2 external Pull-up 2.2kR resistors to VDD_1V8 for using I2C bus. If unused, keep open.
SDA	56	I/O	I2C data	
Keypad interface				
KBR0	29	DO	Bit 0 drive to the pad matrix	All Keypad pins can be configured as GPIOs. KBC0, KBC1, KBC2, KBC3, KBR0 and KBR2 can be configured as SD2, please refer to SDIO description for more details. If unused, please keep open.
KBR1	33	DO	Bit 1 drive to the pad matrix	
KBR2	30	DO	Bit 2 drive to the pad matrix	
KBR3	35	DO	Bit 3 drive to the pad matrix	
KBR4	34	DO	Bit 4 drive to the pad matrix	
KBC0	28	DI	Bit 0 for sensing key press on pad matrix	
KBC1	27	DI	Bit 1 for sensing key press on pad matrix	
KBC2	31	DI	Bit 2 for sensing key press on pad matrix	
KBC3	32	DI	Bit 3 for sensing key press on pad matrix	
KBC4	36	DI	Bit 4 for sensing key press on pad matrix	
PCM interface				
PCM_OUT	73	DO	PCM data output. It also can be multiplexed as GPIO5.	If unused, please keep open.
PCM_IN	74	DI	PCM data input. It also can be multiplexed as GPIO0 with module wake/interrupt.	
PCM_SYNC	75	DO	PCM data frame sync signal. It	

			also can be multiplexed as GPIO2.	
PCM_CLK	76	DO	PCM data bit clock. It also can be multiplexed as GPIO3.	
GPIOs				
GPIO1	51	DO	Output as LED control for network status.	If unused, keep open.
GPIO4	54	DI	Input as RF operating control.	
GPIO40	49	DO	Output as operating status indicating of module. It also can output a clock signal for PCM clock source.	
GPIO41	52	DO	General input/output. It can be used as wake/interrupt signal to host from module	
GPIO43	50	DI	General input/output. It can be used as wake/interrupt signal to module from host.	
GPIO44	48	I/O	General input/output. It can be configured as SD detecting.	
GPIO42	53	I/O	General input/output. It can be configured as USIM card detecting.	
RF interface				
MAIN _ANT	82		MAIN antenna soldering pad	
GNSS_ANT	79	AI	GNSS antenna soldering pad	
AUX_ANT	59	AI	Diversity antenna soldering pad	
Other interface				
RESET	4	DI	System reset input, active low.	
ISINK	45	DI	Current source of ground-referenced current sink	If unused, please keep open.
ADC1	47	AI	Analog Digital Converter Input	
ADC2	46	AI	Analog Digital Converter Input	
RF_CFG1	83	I/O	RF control	They are used to control RF when SDIO function is used. If unused, keep open.
RF_CFG2	84	I/O		
RF_CFG3	86	I/O		
BOO_CFG0	85	DI	Boot configure	Recommend placing 2 test points for debugging. Module will be forced to go into USB download mode by connect 85 and 87 pins to VDD_1V8 during power up.
BOO_CFG1	87	DI		

2.3 Package Dimensions

The following figure shows mechanical dimensions of SIM7100C.

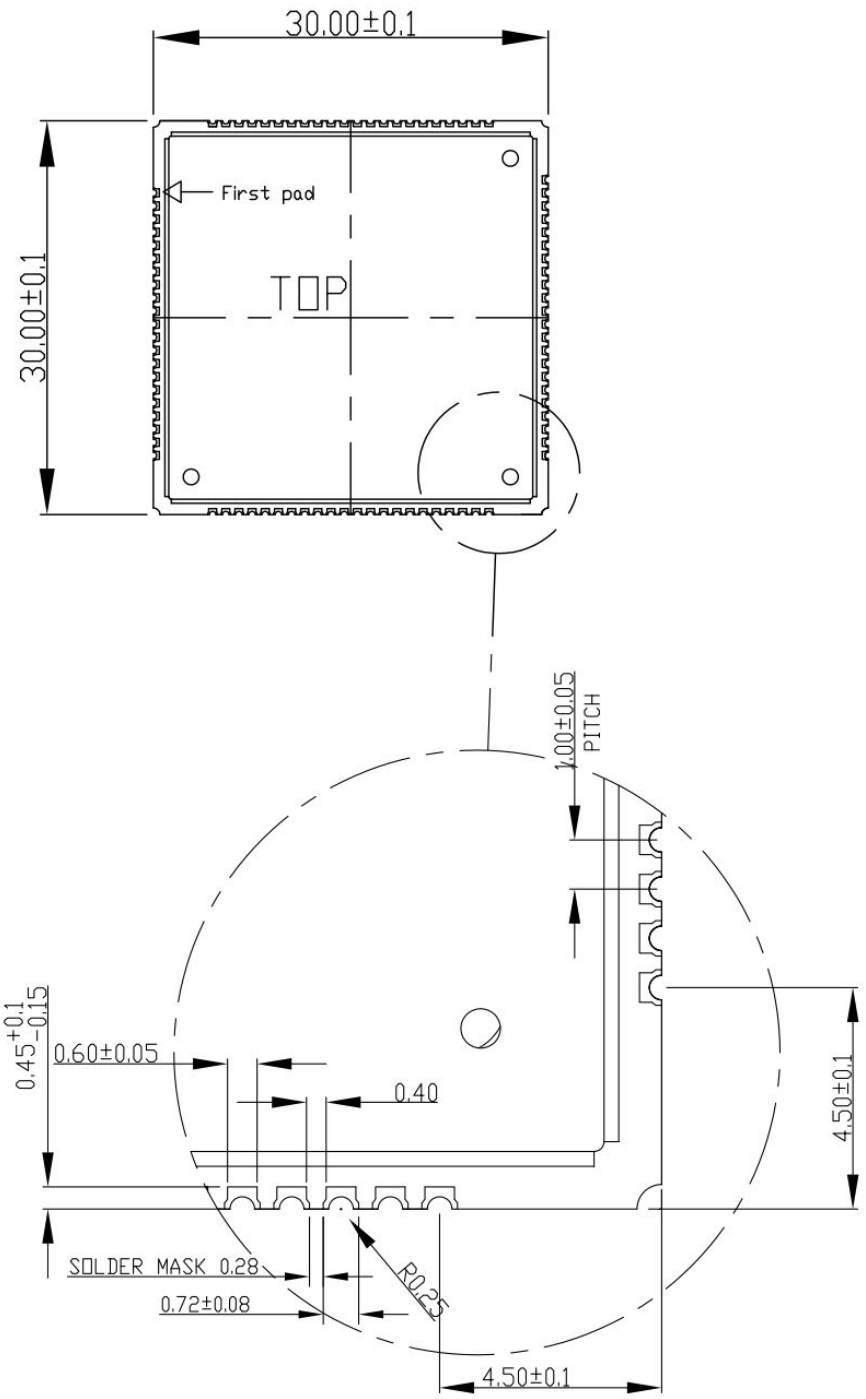

Figure 2: Top dimensions (Unit: mm)

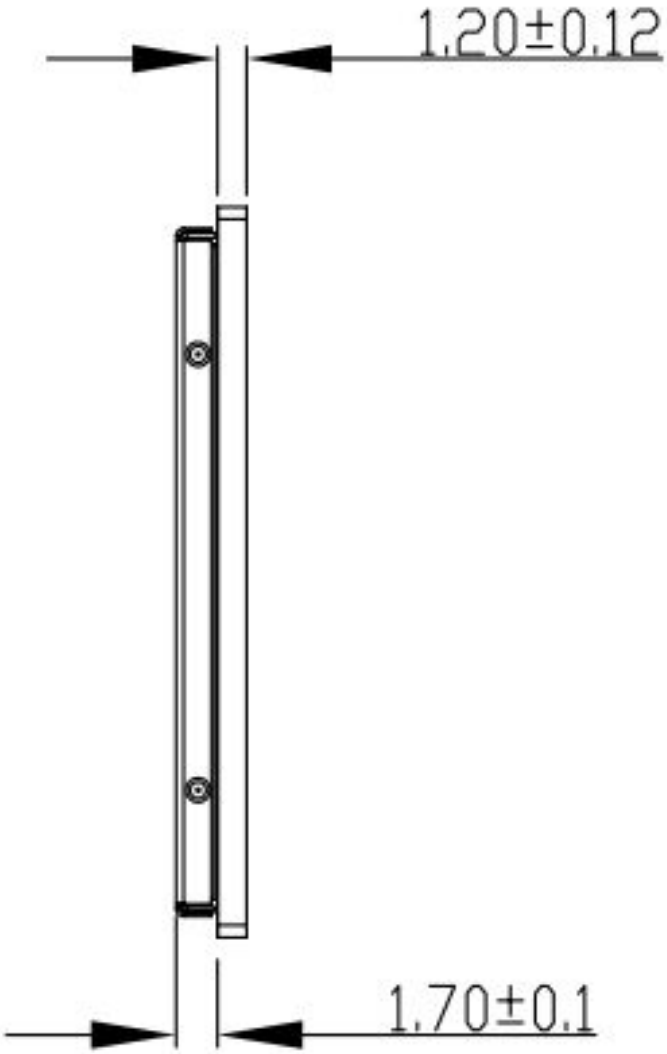

Figure 3: Side dimensions (Unit: mm)

SIMCOM

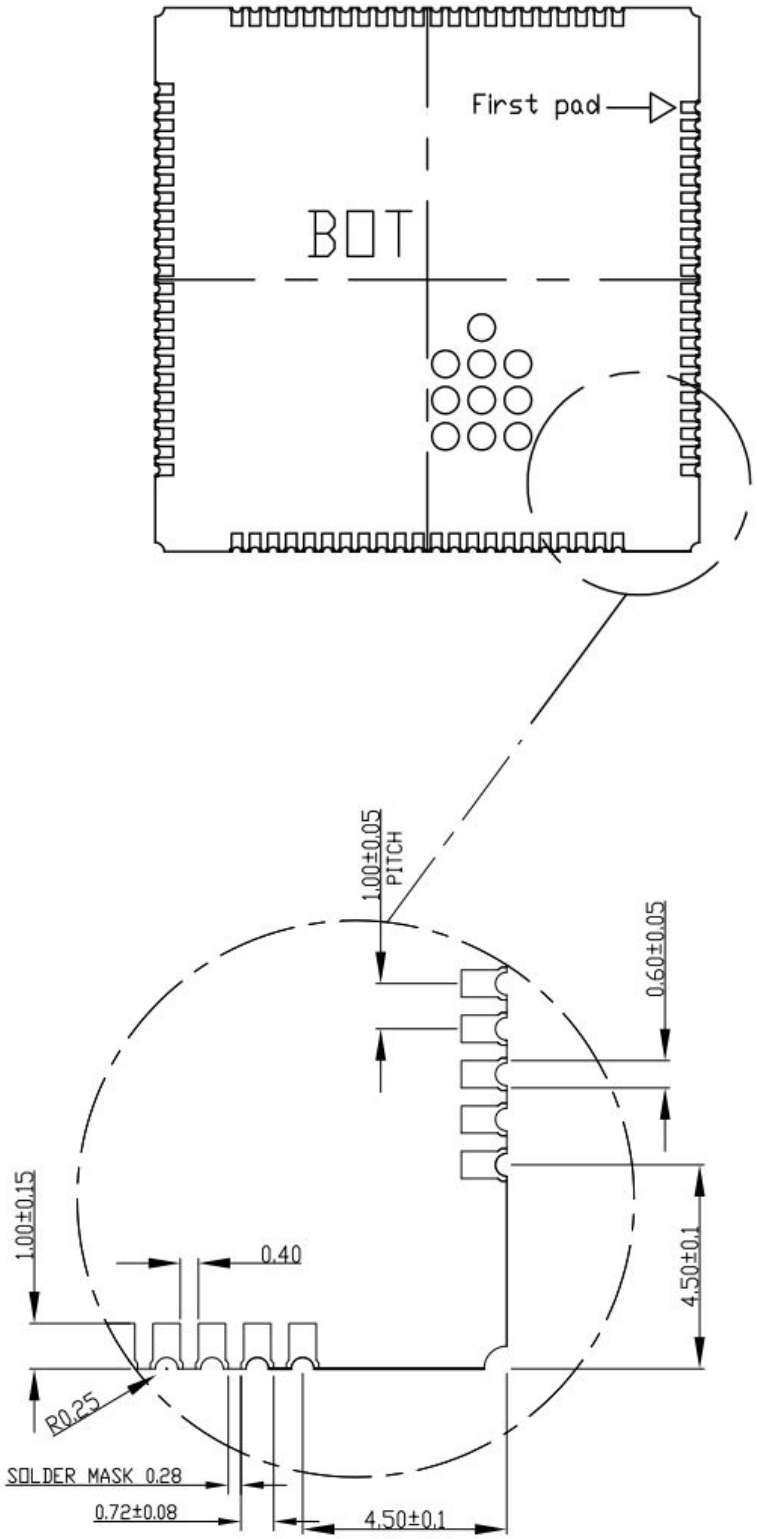

Figure 4: Bottom dimensions (Unit: mm)

2.4 Footprint Recommendation

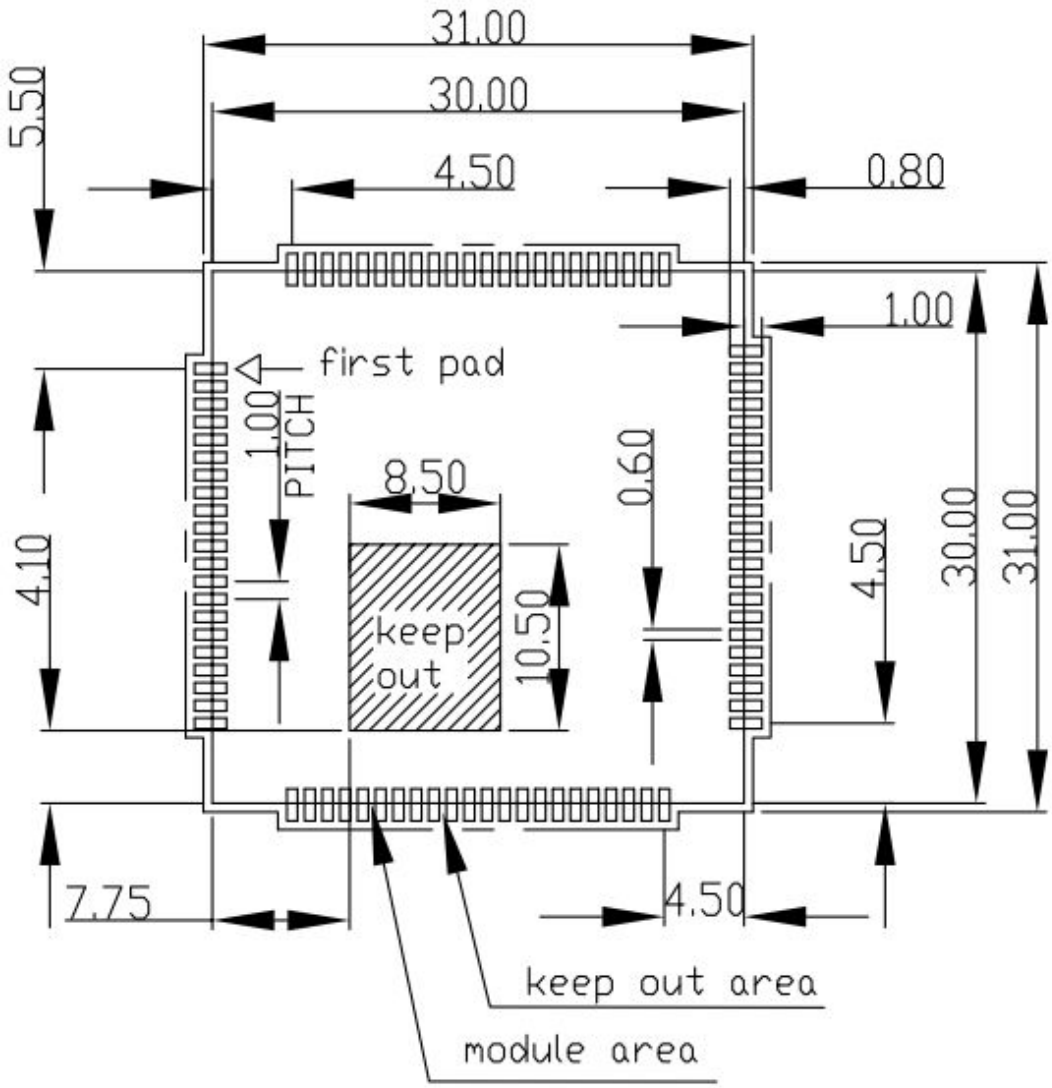

Figure 5: Footprint recommendation (Unit: mm)

3 Application Interface Specification

3.1 Power Supply

The power supply pins of SIM7100C include four VBAT pins (pin 62&63, pin 38&39). VBAT directly supplies the power to RF and baseband circuit. VBAT directly supplies the power to RF PA and baseband system. Power Supply Pin
4 VBAT pins are dedicated to connect the supply voltage.

Table 7: VBAT Pin description

Pin type	Pin name	Min	Typ	Max	Unit
POWER	VBAT	3.15	3.8	4.2	V

3.1.1 Design Guide

Make sure that the input voltage at the VBAT pin will never drop below 3.15V even during a transmit when the current consumption up to more than 700mA. If the power voltage drops below 3.15V, the module may be shut down automatically. Using large tantalum capacitors (above 300uF) will be the best way to reduce the voltage drops.
For the consideration of RF performance and system stability, some multi-layer ceramic chip (MLCC) capacitors (0.1/1uF) need to be used for EMC because of their low ESR in high frequencies. Note that capacitors should be put beside VBAT pins as close as possible. Also User should minimize the PCB trace impedance from the power supply to the VBAT pins through widening the trace to 80 mil or more on the board. The following figure is the recommended circuit.

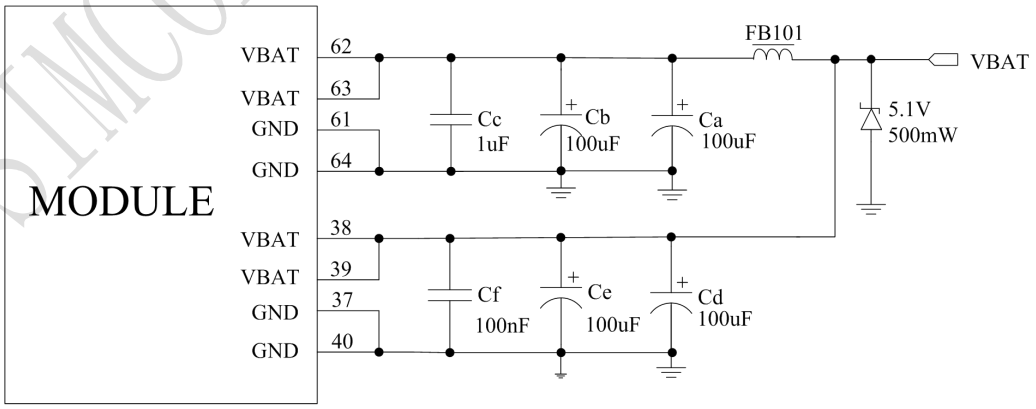

Figure 6: VBAT input application circuit

Note: The Cd, Ce, Cb, Cc and Cf must be mounted for SIM7100C.

SIMCOM CONFIDENTIAL FILE

In addition, in order to get a stable power source, it is suggested to use a zener diode of which reverse zener voltage is 5.1V and dissipation power is more than 500mW.

Table 8: Recommended zener diode models

No.	Manufacturer	Part Number	Power	Package
1	On semi	MMSZ5231BT1G	500mW	SOD123
2	Prisemi	PZ3D4V2H	500mW	SOD323
3	Vishay	MMSZ4689-V	500mW	SOD123
4	Crownpo	CDZ55C5V1SM	500mW	0805

3.1.2 Recommended Power supply circuit

We recommend DCDC or LDO is used for the power supply of the module, make sure that the peak current of power components can rise up to more than 2A. The following figure is the reference design of +5V input power supply. The designed output for the power supply is 3.8V, here a linear regulator can be used.

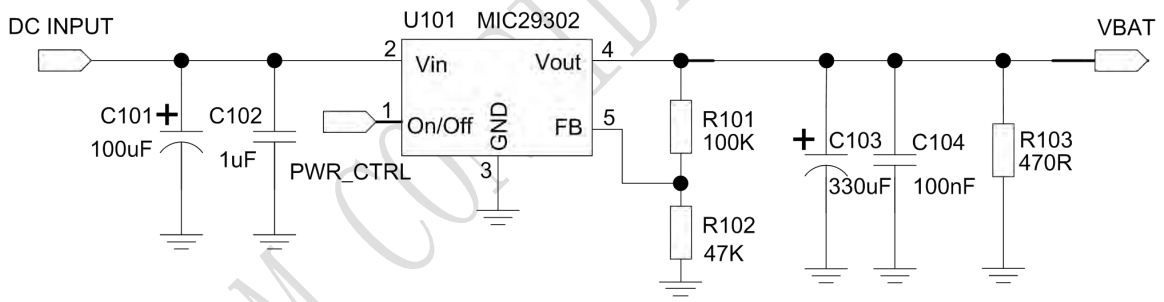

Figure 7: Reference circuit of the LDO power supply

If there is a big difference between the input voltage and the desired output (VBAT), a switching converter power will be preferable because of its better efficiency, especially at the high current situation. The following figure is the reference circuit. Note that DCDC may deprave RF performance because of ripple current intrinsically.

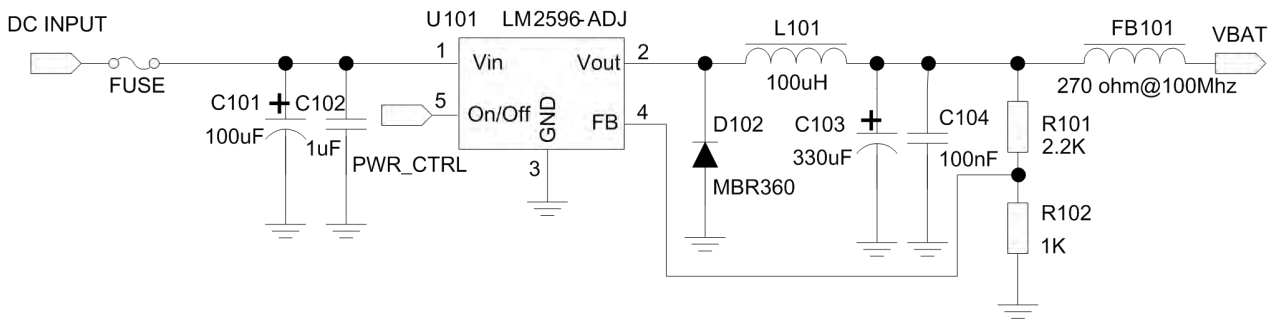

SIMCOM CONFIDENTIAL FILE

Figure 8: Reference circuit of the DCDC power supply

3.1.3 Voltage monitor

To monitor the power supply voltage, user can use the AT command "AT+CBC", this command has two parameters: the battery status and the voltage value (mV). It will return the capacity percentage and actual value of battery (at the VBAT pin). The voltage is continuously measured at intervals, whenever the measured battery voltage is lower than a specific value set by the AT command "AT+CVALARM". For example, if the voltage value is set to be 3.4V, the following URC will be presented: "warning! voltage is low: 3.3v".

If the voltage is lower than a specific value which is set by the AT command "AT+CPMVT", the module will be powered off automatically and AT commands cannot be executed any more.

Note: Under-voltage warning function and under-voltage power-off function are disabled by default. For more information about these AT command, please refer to Document [1].

3.2 Power on/Power off/Reset Time Sequence

3.2.1 Power on Sequence

SIM7100C can be powered on by PWRKEY pin, which starts normal operating mode.
PWRKEY pin is pulled up with a 200k ohm resistor to 1.8V in module. User can power on the SIM7100C by pulling the PWRKEY pin down for a short time. The power-on scenarios are illustrated in the following figures.

SIMCOM CONFIDENTIAL FILE

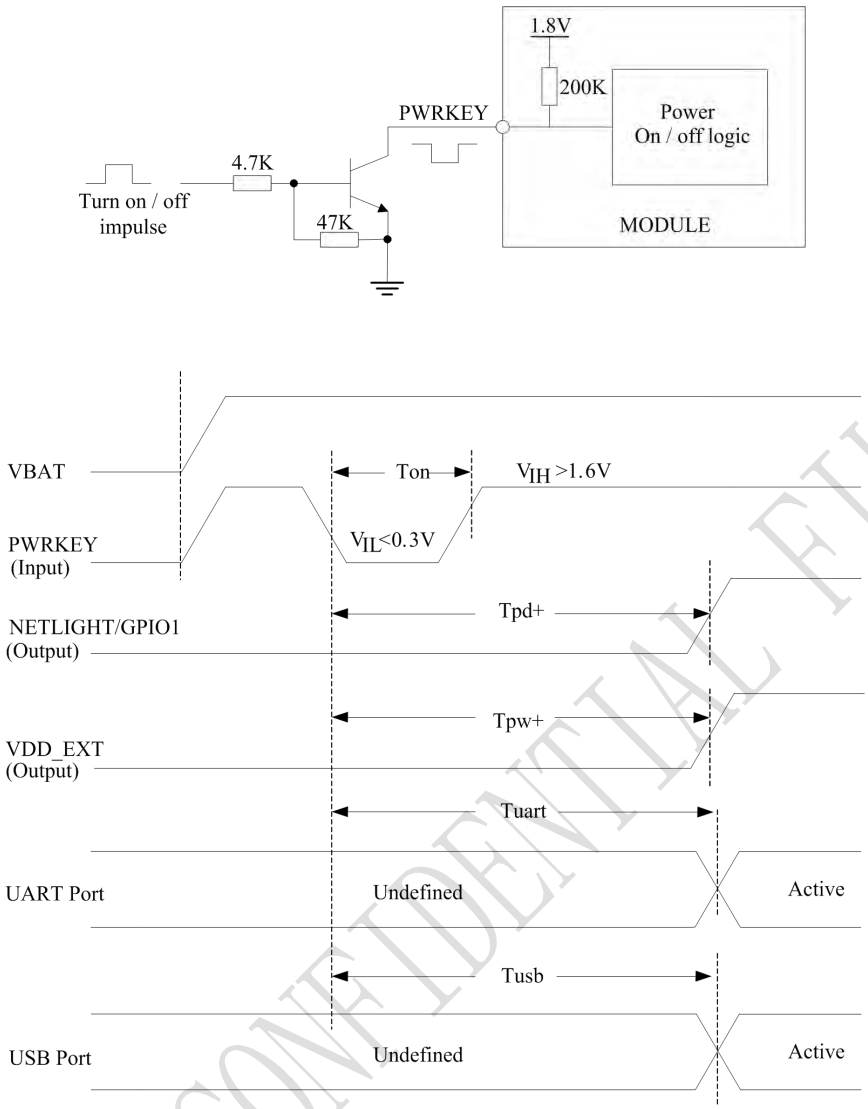

Figure 9: Power on Timing Sequence

SIMCOM CONFIDENTIAL FILE

Table 9: Power on timing

Symbol	Parameter	Time value			Unit
		Min.	Typ.	Max.	
Ton	The time to pull PWRKEY down to power on	180	500	-	ms
TpD+	The time to indicate connecting with the network	-	-	5	s
Tpw+	The time to indicate the module is powered on completely	-	-	0.5	s
Tuart	The time to enable UART	-	-	8	s
Tusb	The time to enable USB	-	-	10	s

Note: Module could be automatically power on by connecting PWRKEY pin to Low level directly. Before designing, please refer to Document [27] for more detail.

3.2.2 Power off Sequence

The following methods can be used to power down SIM7100C. These procedures will make module disconnect from the network and allow the software to enter a safe state, and then save data before completely powering the module off.

- Method 1: Power off SIM7100C by pulling the PWRKEY pin down
- Method 2: Power off SIM7100C by AT command

User can power off the SIM7100C by pulling PWRKEY down for a specific time. The power off scenario is illustrated in the following figure.

SIMCOM CONFIDENTIAL FILE

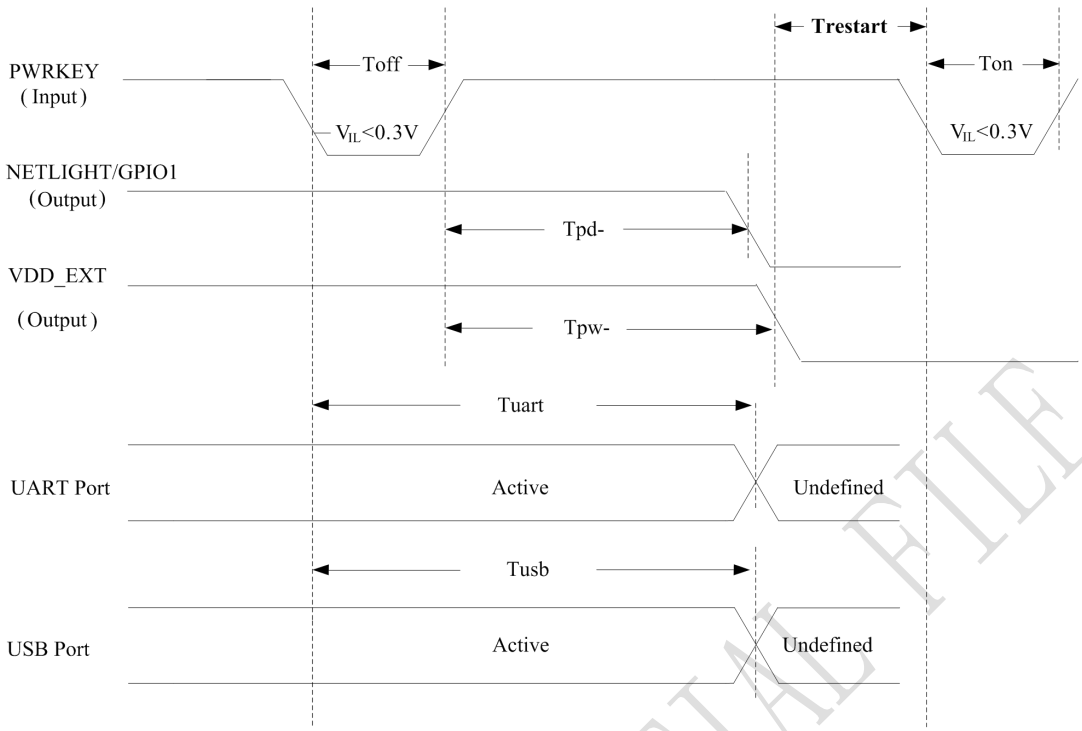

Figure 10: Power off timing sequence

Table 10: Power off timing

Symbol	Parameter	Time value			
		Min.	Typ.	Max.	Unit
Toff	The time pulling PWRKEY down to power off	0.5	-	5	s
TpD-	The time to indicate disconnecting from the network	-	-	2	s
Tpw-	The time to indicate the module power off completely	-	-	2	s
Tuart	The time to disable UART	-	-	3	s
Tusb	The time to disable USB	-	-	2	s
Trestart	The time to power on again after Tpw-	0	-	-	s

User can also use the AT command "AT+CPOF" to power down the module. After that, the AT commands cannot be executed any longer. The module enters the POWER DOWN mode.

VDD_EXT pin can be used to detect whether module is powered on or not. When module is powered on and firmware goes ready, VDD_EXT will be high level.

Note: For details about "AT+CPOF", please refer to Document [1].

3.2.3 Reset Function

SIM7100C also have a RESET pin (PIN4) to reset the module. This function is used as an emergency reset only when AT command "AT+CPOF" and the PWRKEY pin has no effect. User can pull the RESET pin

to ground, then the module will reset.

This pin is already pulled up in module, so the external pull-up resistor is not necessary. A 100nF capacitor close to the RESET pin is strongly recommended. A reference circuit is recommended in the following figure.

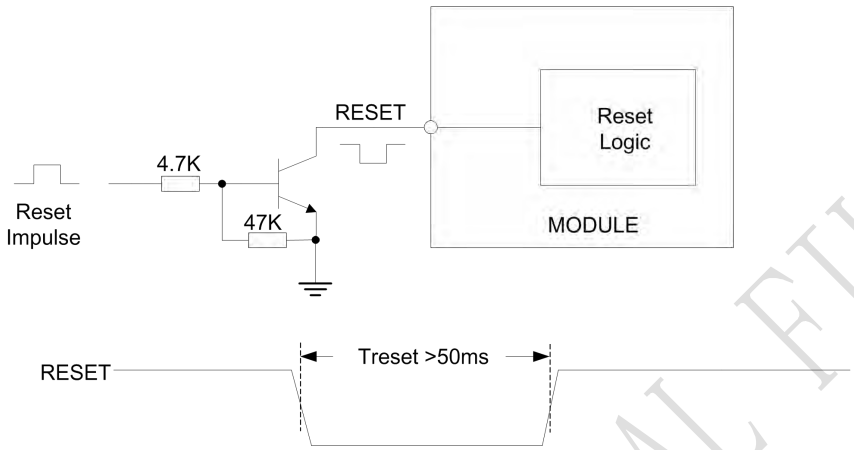

Figure 11: Reset circuit

Note：50ms<Treset<200ms. ESD components are suggested to be used on Reset pin.

Table 11: RESET Pin Electronic Characteristic

Symbol	Description	Min	Typ	Max	Unit
V_{IH}	Input high level voltage	1.17	1.8	2.1	V
V_{IL}	Input low level voltage	-0.3	0	0.63	V
T_{reset}	Low level pulse width	50	100	200	ms

3.3 UART Interface

SIM7100C provides an UART (universal asynchronous serial transmission) port， consisting of a flexible 7-wire serial interface. The module is as the DCE (Data Communication Equipment) and the client PC is as the DTE (Data Terminal Equipment). AT commands are entered and serial communication is performed through UART interface.

Table 12: UART Pin description

SIMCOM CONFIDENTIAL FILE

Pin type	Pin name	Pin No.	I/O	Default Status
UART1	RXD	68	I	Pull-Down
	TXD	71	O	Pull-Up
	RTS	66	O	Pull-Up
	CTS	67	I	Pull-Down
	DTR	72	I	Pull-Up
	DCD	70	O	Pull-Up
	RI	69	O	Pull-Up

More pin information refers to chapter 2.2.

Table 13: UART Pin Logic level

Symbol	Parameter	Min	Typ	Max	Unit
V_{IH}	High-level input voltage	1.26	1.8	2.1	V
V_{IL}	Low-level input voltage	-0.3	0	0.63	V
V_{OH}	High-level output voltage	1.35	-	1.8	V
V_{OL}	Low-level output voltage	0	0	0.45	V

3.3.1 RI Behavior

If UART port is used in Null Modem, the pin "RI" can be used as an interrupt signal to HOST. Normally it will keep high logic level until certain condition such as receiving SMS, voice call (CSD, video) or URC reporting, then "RI" will change to low logic level to inform the master (client PC). It will stay low until the master clears the interrupt event with AT command.

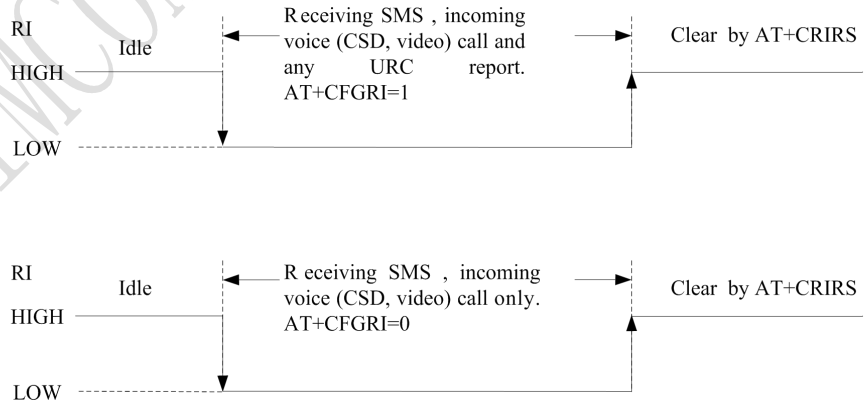

Figure 12: RI behaviour in NULL Modem

If Full Modem is used to establish communication between devices, the pin "RI" is another operation

status. Initially it keeps high, when a voice call or CSD call comes, the pin "RI" will change to low for about 5900ms, then it will return to high level for 100ms. It will repeat this procedure until this call is answered or hung up.

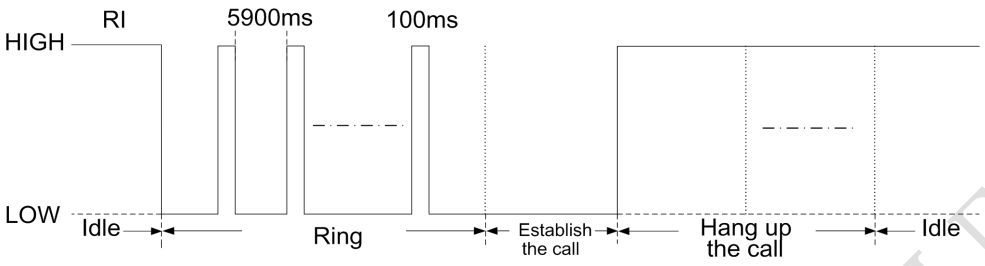

Figure 13: RI behaviour in FULL Modem

3.3.2 Design Guide

The application circuit is in the following figures.

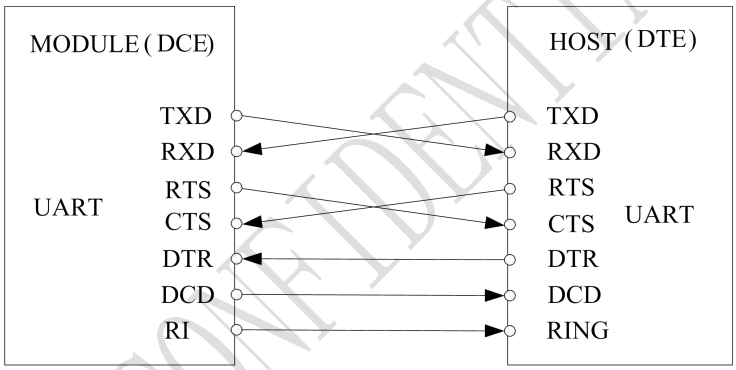

Figure 14: UART Full modem

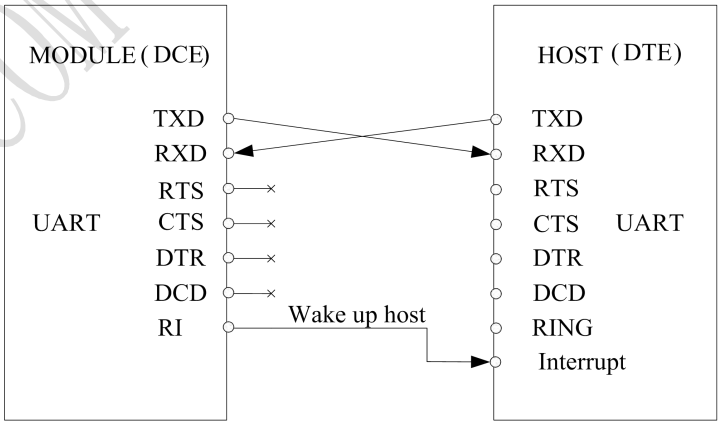

Figure 15: UART Null modem

The SIM7100C UART is 1.8V interface. A level shifter should be used if user's application is equipped with a 3.3V UART interface. The level shifter TXB0108RGYR provided by Texas Instruments is

SIMCOM CONFIDENTIAL FILE

recommended. The reference design of the TXB0108RGYR is in the following figures.

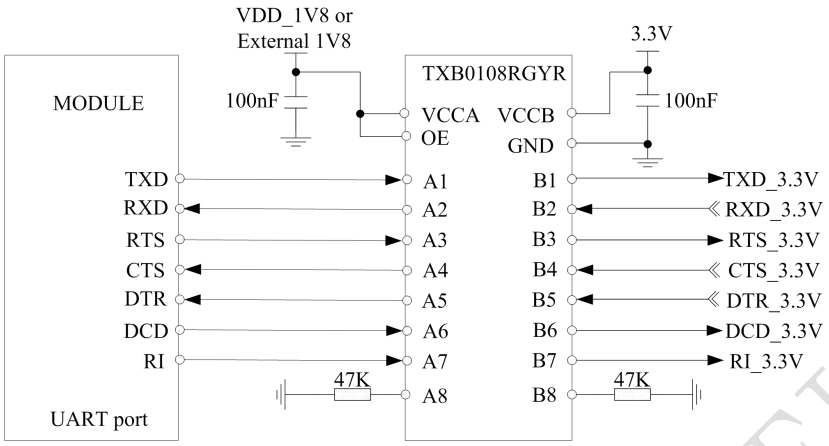

Figure 16: Reference circuit of level shift

To comply with RS-232-C protocol, the RS-232-C level shifter chip should be used to connect SIM7100C to the RS-232-C interface. In this connection, the TTL level and RS-232-C level are converted mutually. SIMCom recommends that user uses the SP3238ECA chip with a full modem. For more information please refers to the RS-232-C chip datasheet.

Note: SIM7100C supports the baud rate: 300, 600, 1200, 2400, 4800, 9600, 19200, 38400, 57600, 115200, 230400, 460800, 921600, 3200000, 3686400, 4000000bps. Default rate is 115200bps.

3.4 USB Interface

SIM7100C module contains a USB interface. This interface is compliant with the USB2.0 specification as a peripheral or embedded host. USB charging is not supported.

Table 14: USB Pin description

Pin name	Pin No.	Description
USB_VBUS	11	Valid USB detection input ， Valid USB detection voltage is 3.0-5.25V.
USB_DP	13	USB 2.0 specification-compliant as a peripheral or embedded host
USB_DN	12	
USB_ID	16	High-speed USB ID input. If keep USB_ID pin open, SIM7100C will be a USB device. If tie USB_ID pin to ground, SIM7100C will be a USB host controller.

3.4.1 USB Application Guide

Normally, SIM7100C is a USB device. SIM7100C supports the USB suspend and resume mechanism which can help to save power. If no transaction is on USB bus, SIM7100C will enter suspend mode.

COM CONFIDENTIAL FILE

When some events such as voice call or receiving SMS happen, SIM7100C will resume normal mode automatically.

SIM7100C is a USB host controller.

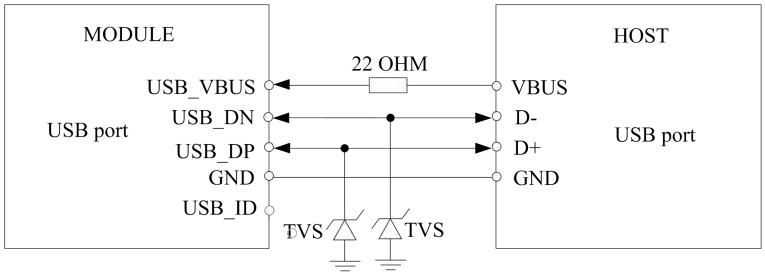

Figure 17: USB Reference Circuit with SIM7100C as USB Host Controller.

Because of high bit rate on USB bus, please pay attention to influence of junction capacitance of ESD component on USB data lines. Typically, the capacitance should be less than 1pF ,It is recommended to use an ESD protection component such as ON SEMI (www.onsemi.com) ESD9L5.0ST5G.

Note：The SIM7100C has two kinds of interface (UART and USB) to connect to host CPU. USB interface is mapped to five virtual ports: "SIMTECH HS-USB Modem 9001", "SIMTECH HS-USB NMEA 9001", "SIMTECH HS-USB AT port 9001", "SIMTECH HS-USB Diagnostics 9001" and "SIMTECH Wireless HS-USB Ethernet Adapter 9001".

SIMCOM CONFIDENTIAL FILE

3.5 USIM Interface

The USIM provides the required subscription verification information to allow the mobile equipment to attach to a GSM or UMTS network. Both 1.8V and 3.0V SIM Cards are supported.

3.5.1 USIM Pin description

Table 15: USIM Pin description

Pin name	Pin	Description
USIM_CLK	19	USIM Card Clock
USIM_RST	18	USIM Card Reset
USIM_DATA	17	USIM Card data I/O, which has been pulled up with a 22kR resistor to USIM_VDD in module. Do not pull up or pull down in users' application circuit.
USIM_VDD	20	USIM Card Power output depends automatically on USIM mode， one is 3.0V±10%, another is 1.8V±10%. Current is less than 50mA.

Table 16: USIM Electronic characteristic

Symbol	Parameter	3.0V mode			1.8V mode			Unit
		Min	Typ	Max	Min	Typ	Max	
USIM_VDD	LDO power output	2.71	2.85	3.05	1.7	1.8	1.9	V
V_{IH}	High-level input voltage	0.65·USIM_VDD	-	USIM_VDD +0.3	0.65·USIM_VDD	-	USIM_VDD +0.3	V
V_{IL}	Low-level input voltage	-0.3	0	0.3·USIM_VDD	-0.3	0	0.3·USIM_VDD	V
V_{OH}	High-level output voltage	2.71	2.85	3.05	1.7	1.8	1.9	V
V_{OL}	Low-level output voltage	0	0	0.45	0	0	0.45	V

3.5.2 USIM Application Guide

It is recommended to use an ESD protection component such as ST (www.st.com) ESDA6V1W5 or ON

SEMI (www.onsemi.com) SMF05C. Note that the SIM peripheral circuit should be close to the SIM card socket. The reference circuit of the 6-pin SIM card holder is illustrated in the following figure.

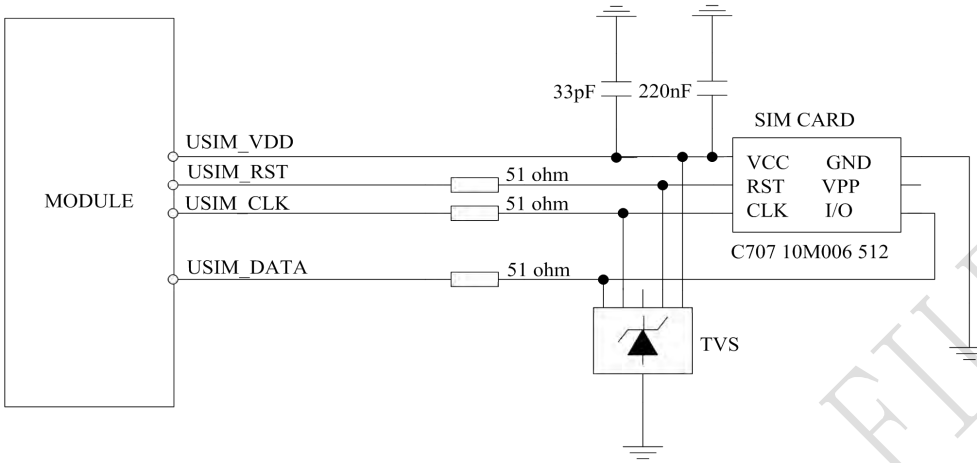

Figure 18: USIM interface reference circuit

Note: USIM_DATA has been pulled up with a 15kohm resistor to USIM_VDD in module. A 220nF shut capacitor on USIM_VDD is used to reduce interference. Use AT Commands to get information in USIM card. For more detail, please refer to document [1].

3.5.3 Recommend Components of USIM holder

For 6 pins USIM socket, SIMCom recommend to use Amphenol **C707 10M006 512**. User can visit http://www.amphenol.com for more information about the holder.

SIMCOM CONFIDENTIAL FILE

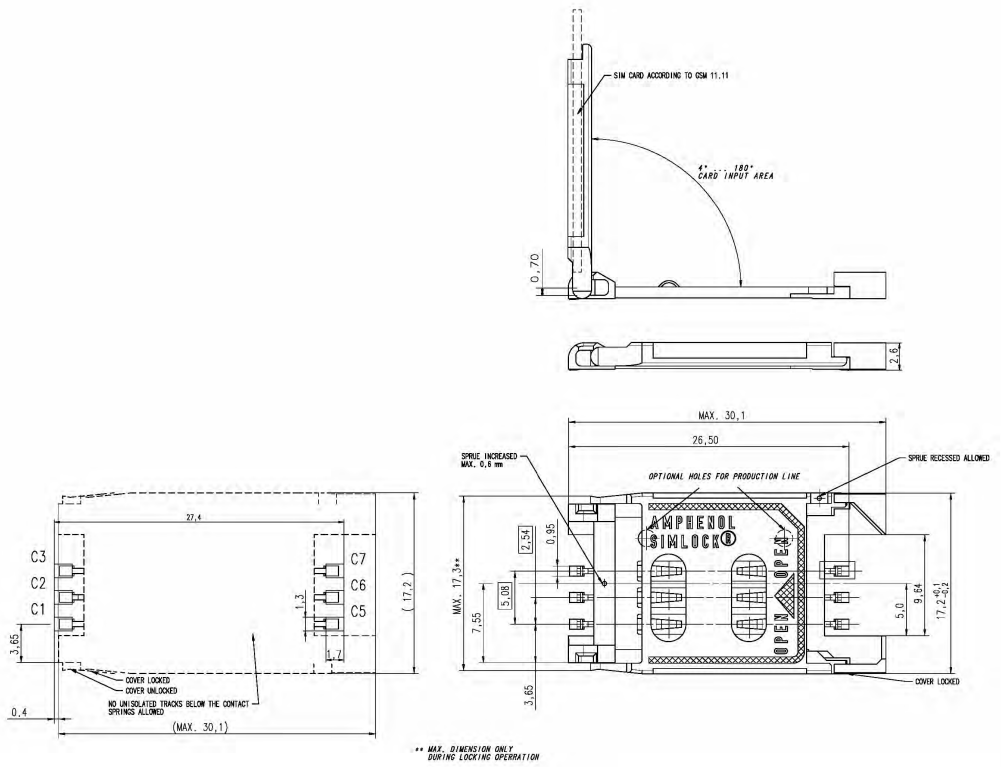

Figure 19: Amphenol SIM card socket

Table 17: Amphenol USIM socket pin description

Pin	Signal	Description
C1	USIM_VDD	SIM Card Power supply, it can identify automatically the SIM Card power mode，one is 3.0V±10%, another is 1.8V±10%.
C2	USIM_RST	SIM Card Reset.
C3	USIM_CLK	SIM Card Clock.
C5	GND	Connect to GND.
C6	VPP	
C7	USIM_DATA	SIM Card data I/O.

3.6 PCM Interface

SIM7100C provides hardware PCM interface for external codec. The PCM interface enables communication with an external codec to support hands-free applications. SIM7100C PCM interface can be used in two modes: the default mode is auxiliary PCM (8 KHz long sync mode at 128 KHz PCM CLK); the other mode is primary PCM (8 KHz short sync mode at 2048 KHz PCM CLK). In short-sync (primary PCM) mode, SIM7100C can be a master or a slave. In long-sync (auxiliary PCM) mode, SIM7100C is always a master. SIM7100C also supports 3 kinds of coding formats: 8 bits (υ-law or A-law)

and 16 bits (linear).

Note: PCM interface is multiplexed from GPIO (default setting). The AT command "AT+CPCM" is used to switch between PCM and GPIO functions. Please refer to document [21] and document [1] for details.

3.6.1 PCM Pin Description

Table 18: PCM Pin description

Pins	Pin No.	Description
PCM_OUT	73	PCM data output
PCM_IN	74	PCM data input
PCM_SYNC	75	PCM data synchrony
PCM_CLK	76	PCM data clock

Table 19: PCM Electronic characteristic

Symbol	Parameter	Min	Typ	Max	Unit
V_{IH}	High-level input voltage	1.26	1.8	2.1	V
V_{IL}	Low-level input voltage	-0.3	0	0.63	V
V_{OH}	High-level output voltage	1.35	-	1.8	V
V_{OL}	Low-level output voltage	0	0	0.45	V

3.6.2 PCM Signal Description

The default PCM interface in SIM7100C is the auxiliary PCM interface. The data changes on the high level of PCM_CLK and is sampled at the falling edge of PCM_CLK in one period. Primary PCM is disabled after every power-on or every reset event. So user must use AT command to enable the primary PCM mode after powering on or resetting the module every time if user wants to use Primary PCM.SIM7100C PCM Interface can be operated in Master or Slave mode if it is configured to primary PCM. In Master Mode, the Module drives the clock and sync signals that are sent to the external codec. When it is in Slave Mode, the external codec drives the clock and sync signals which are sent to the module. Both PCM modes are discussed in this section followed by additional PCM topics.

3.6.3 Auxiliary PCM (128 KHz PCM clock)

υ-law coding is supported by the auxiliary PCM. The auxiliary codec port operates with standard

long-sync timing and a 128 KHz clock. The AUX_PCM_SYNC runs at 8 KHz with 50% duty cycle. Most υ-law codec support the 128 KHz clock.

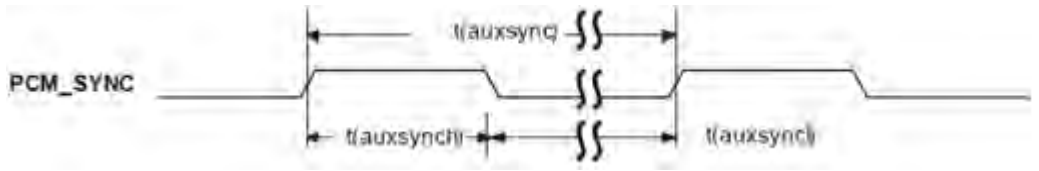

Figure 20: Synchrony timing

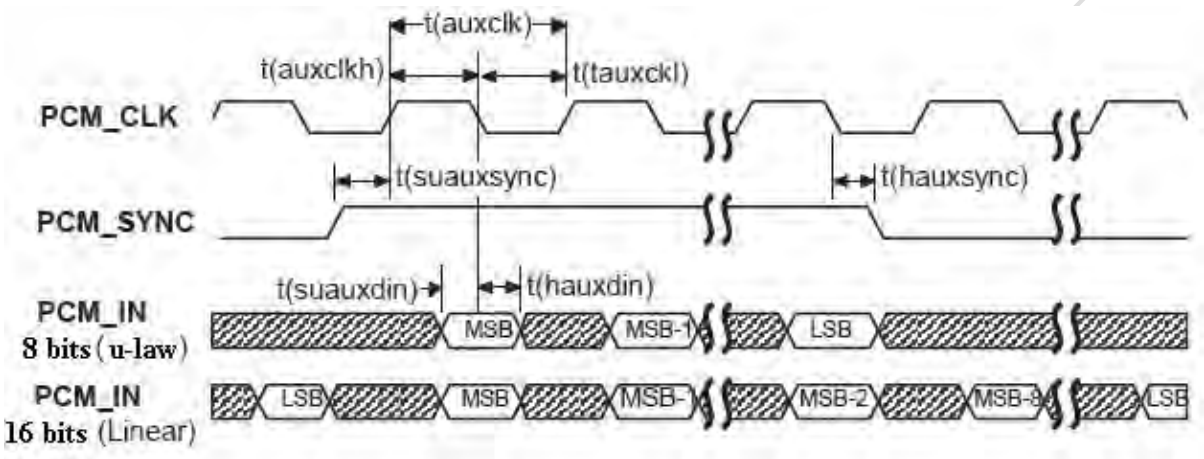

Figure 21: EXT CODEC to MODULE timing

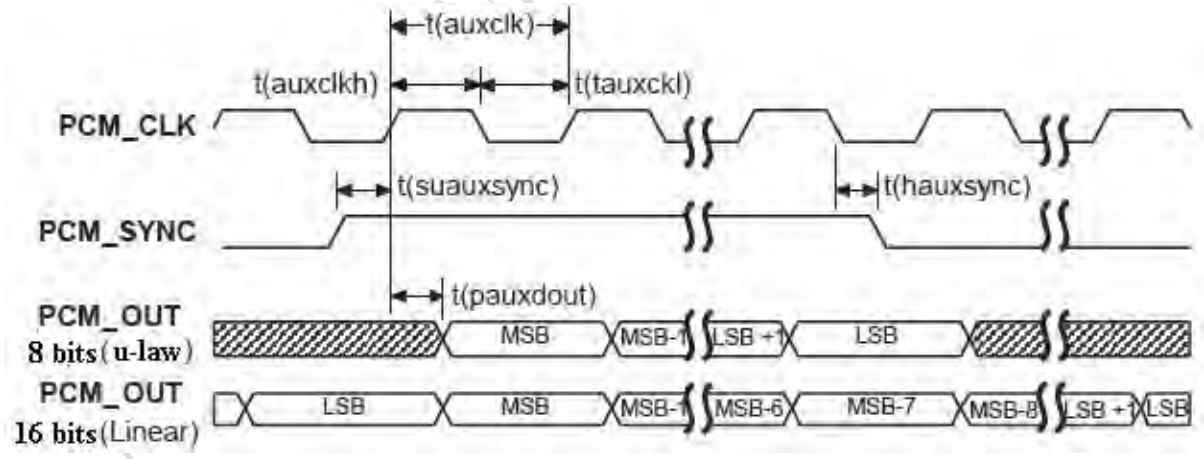

Figure 22: MODULE to EXT CODEC timing

Table 20: Timing parameters

Parameter	Description	Min	Typ	Max	Unit
T(auxsync)	AUX_PCM_SYNC cycle time	–	125	-	µs

T(auxsynch)	AUX_PCM_SYNC high time	62.4	62.5	-	µs
T(auxsyncl)	AUX_PCM_SYNC low time	62.4	62.5	-	µs
T(auxclk)*	AUX_PCM_CLK cycle time	-	7.8	–	µs
T(auxclkh)	AUX_PCM_CLK high time	3.8	3.9	–	µs
T(auxclkl)	AUX_PCM_CLK low time	3.8	3.9	–	µs
T(suauxsync)	AUX_PCM_SYNC setup time high before falling edge of PCM_CLK	1.95	–	–	µs
T(hauxsync)	AUX_PCM SYNC hold time after falling edge of PCM_CLK	1.95	–	–	µs
T(suauxdin)	AUX_PCM_IN setup time before falling edge of AUX_PCM_CLK	70	–	–	ns
T(hauxdin)	AUX_PCM_IN hold time after falling edge of AUX_PCM_CLK	20	–	–	ns
T(pauxdout)	Delay from AUX_PCM_CLK rising to AUX_PCM_OUT valid	–	–	50	ns

***Note: T(auxclk) = 1/(128 KHz).**

3.6.4 Primary PCM (2048 KHz PCM clock)

SIM7100C also supports 2.048 MHz PCM data and sync timing for υ-law codec. This is called the primary PCM interface. User can use AT command to take the mode you want as discussed above.

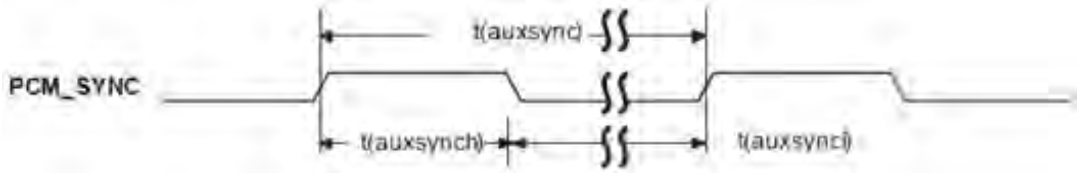

Figure 23: Synchrony timing

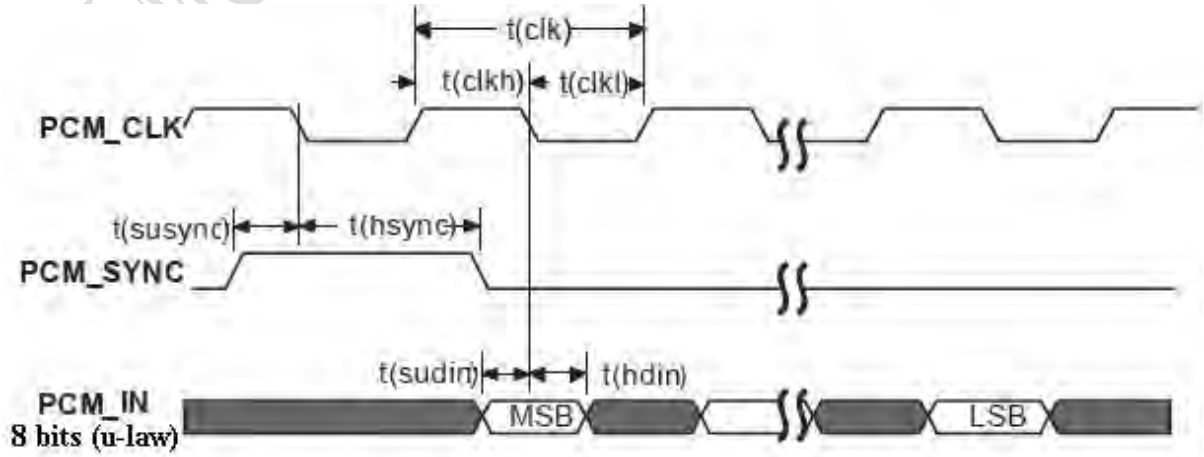

Figure 24: EXT CODEC to MODULE timing

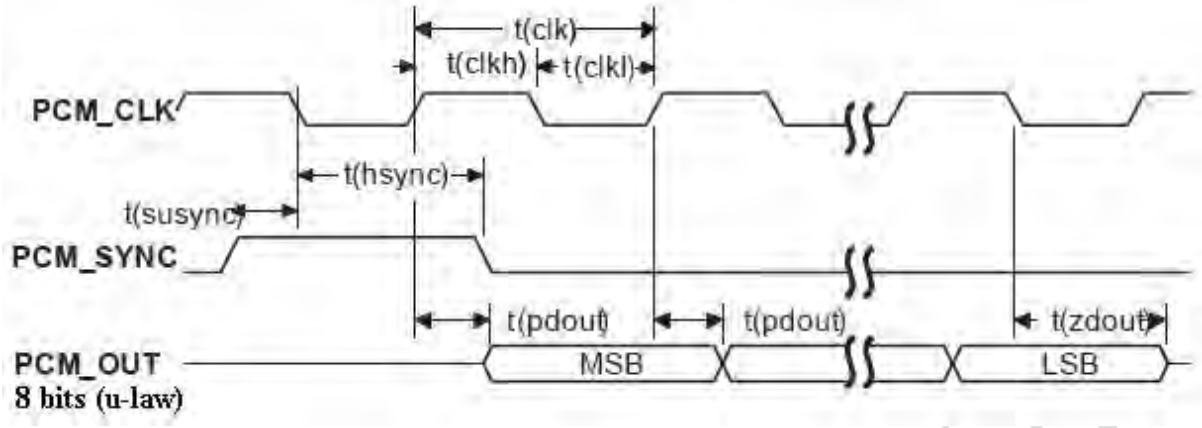

Figure 25: MODULE to EXT CODEC timing

Table 21: Timing parameters

Parameter	Description	Min	Typ	Max	Unit
T(sync)	PCM_SYNC cycle time	–	125	–	µs
T(synch)	PCM_SYNC high time	400	500	–	ns
T(syncl)	PCM_SYNC low time	–	124.5	–	µs
T(clk)	PCM_CLK cycle time	–	488	–	ns
T(clkh)	PCM_CLK high time	–	244	–	ns
T(clkl)	PCM_CLK low time	–	244	–	ns
T(susync)	PCM_SYNC setup time high before falling edge of PCM_CLK	60	–	–	ns
T(hsync)	PCM_SYNC hold time after falling edge of PCM_CLK	60	–	–	ns
T(sudin)	PCM_IN setup time before falling edge of PCM_CLK	50	–	–	ns
T(hdin)	PCM_IN hold time after falling edge of PCM_CLK	10	–	–	ns
T(pdout)	Delay from PCM_CLK rising to PCM_OUT valid	–	–	350	ns
T(zdout)	Delay from PCM_CLK falling to PCM_OUT HIGH-Z	–	160	–	ns

Note: SIM7100C can transmit PCM data by USB except for PCM interface.

3.6.5 PCM Application Guide

The mode of SIM7100C PCM can be configured by AT command “AT+CPCM and AT+CPCMFMT”, and the default configuration is master mode using short sync data format with 2.048MHz PCM_CLK and 8

kHz PCM_SYNC. Please refer to document [21] and document [1] for details.

In addition, the firmware of SIM7100C has integrated the configuration on WM8960GEFL/RV codec provided by WOLFSON MICROELECTRONICS with I2C interface.

The reference circuit of the reference design of PCM interfaces with external codec IC in the following figure. It is recommended to use a 26MHz CXO component such as TXC CORPORATION (www.txccorp.com) 8W26000011.

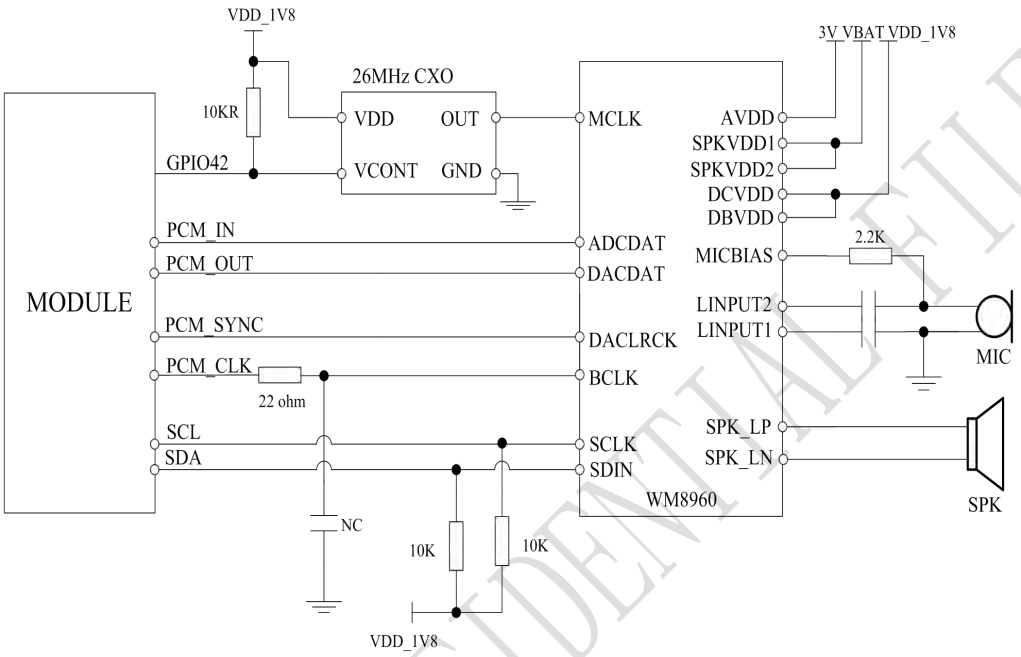

Figure 26: Reference Circuit of PCM Application with Audio Codec

3.7 MMC/SD and SDIO Interface

SIM7100C provides one 4-bit SD/MMC interface and one SDIO interface with clock rate up to 52 MHz.

3.7.1 MMC/SD Interface Pin Description

The operation voltage of MMC/SD interface is 2.85V. It supports 1-bit SD/MMC or 4-bit SD data transmission mode. Though the same hardware controller is used, the initialization procession for SD or MMC cards is different.

Note: Interface with SD/MMC memory cards up to 32GB

Table 22: MMC/SD Pin description

Pin name	Pin No.	Function
SD_DATA0	22	SD/MMC card data0
SD_DATA1	23	SD card data1
SD_DATA2	24	SD card data2

SIMCOM CONFIDENTIAL FILE

SD_DATA3	25	SD card data3
SD_CLK	26	SD card clock
SD_CMD	21	SD card command
GPIO44	48	SD card detecting

Table 23: MMC/SD Electronic characteristic*

Symbol	Parameter	Min	Typ	Max	Unit
VDD_EXT**	LDO power output	2.71	2.85	2.99	V
V_{IH}	High-level input voltage	0.65·VDD_EXT	-	VDD_EXT+0.3	V
V_{IL}	Low-level input voltage	-0.3	0	0.3·VDD_EXT	V
V_{OH}	High-level output voltage	2.71	2.85	2.99	V
V_{OL}	Low-level output voltage	0	0	0.45	V

Note:

For SD_DATA0-SD_DATA3，SD_CLK and SD_CMD，GPIO44 is 1.8V operation voltage.

****VDD_EXT must be set with 2.85V output.***

SIMCOM CONFIDENTIAL

3.7.2 SDIO Interface Pin Description

Table 24: SDIO Pin description

Pin name	Pin No.	Function
KBR2	30	SD2_DATA0
KBC1	27	SD2_DATA1
KBC0	28	SD2_DATA2
KBC2	31	SD2_DATA3
KBR0	29	SD2_CMD
KBC3	32	SD2_CLK

Table 25: SDIO Electronic characteristic

Symbol	Parameter	Min	Typ	Max	Unit
V_{IH}	High-level input voltage	1.26	1.8	2.1	V
V_{IL}	Low-level input voltage	-0.3	0	0.63	V
V_{OH}	High-level output voltage	1.35	-	1.8	V
V_{OL}	Low-level output voltage	0	0	0.45	V

3.7.3 SD Design guide

The module can't provide power for SD card. External 2.85V LDO is needed with capable of 300mA. Data lines should be pulled up to VDD_EXT by 10K resistors. ESD/EMI components should be arranged beside SD card socket. Refer to the following application circuit.

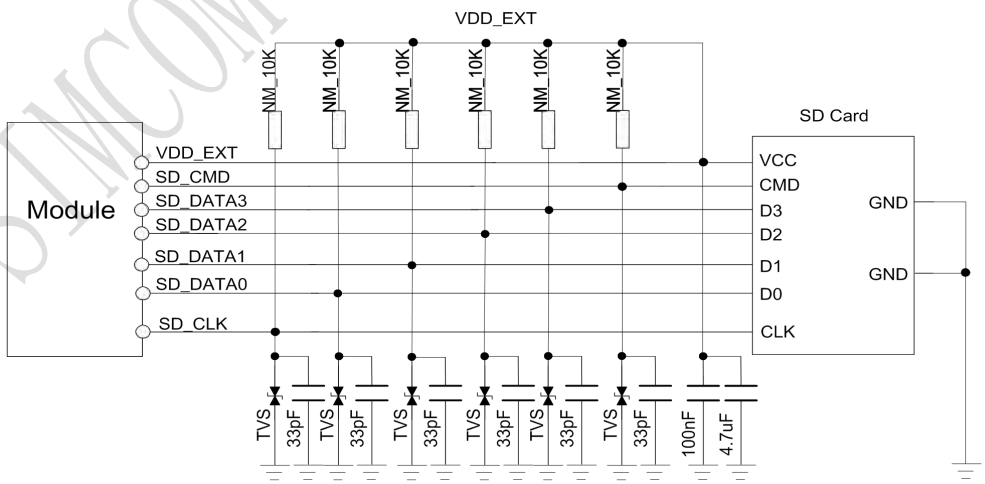

Figure 27: SD interface circuit

3.8 I2C Interface

I2C is used to communicate with peripheral equipments and can be operated as either a transmitter or receiver, depending on the device function. Use AT Commands "AT+CRIIC and AT+CWIIC" to read/write register values of related peripheral equipments connected with I2C interface. Its operation voltage is 1.8V.

3.8.1 I2C Pin Description

Table 26: I2C Pin description

Pin name	Pin No.	Function
SDA	56	Serial interface data input and output
SCL	55	Serial interface clock input

3.8.2 I2C Signal Description

Both SDA and SCL are bidirectional lines, connected to a positive supply via a pull-up resistor respectively. When the bus is free, both lines are high.

3.8.3 I2C Design Guide

For SIM7100C, the data on the I2C bus can be transferred at rates up to 400kbps. The number of peripheral devices connected to the bus is solely dependent on the bus capacitance limit of 400pF. Note that PCB traces length and bending are in users' control to minimize load capacitance.

Note：SDA and SCL have none pulled up resistors in module. So there is need to pull them up in users' application circuit.

3.9 Keypad Interface

SIM7100C module provides a keypad interface that supports five sense lines, or columns, and five keypad rows. The interface generates an interrupt when any key is pressed. Its operation voltage is 1.8V.

3.9.1 Keypad Pin Description

Table 27: Keypad Pin description

SIMCOM CONFIDENTIAL FILE

Pin name	Pin No.	Function
KBC0	28	Sensing keys
KBC1	27	
KBC2	31	
KBC3	32	
KBC4	36	
KBR0	30	Driving pads
KBR1	29	
KBR2	30	
KBR3	35	
KBR4	34	

3.9.2 Keypad Application Guide

All keypad pins can be configured for GPIOs. These GPIOs also support interruption operation if used as input pins. A typical circuit about the keypad (5*5 keypad matrix) is shown in the following figure.

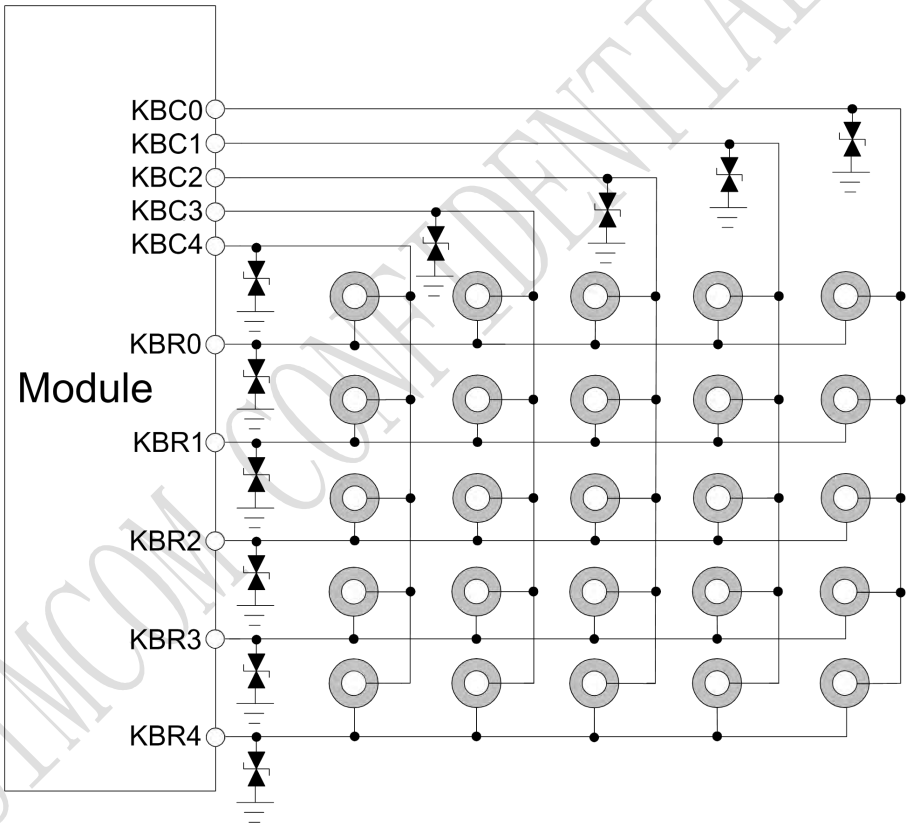

Figure 28: Reference circuit

If these pins are configured for GPIOs, the sequence is listed in the following table.

Table 28: Keypad multiplexing function

Pin name	Pin number	Mode 0(default)	Mode 1

SIMCOM CONFIDENTIAL FILE

KBR4	34	KBR4	GPIO6
KBR3	35	KBR3	GPIO7
KBR2	30	KBR2	GPIO8
KBR1	33	KBR1	GPIO9
KBR0	29	KBR0	GPIO10
KBC4	36	KBC4	GPIO11
KBC3	32	KBC3	GPIO12
KBC2	31	KBC2	GPIO13
KBC1	27	KBC1	GPIO14
KBC0	28	KBC0	GPIO15

Note: Refer to document [23] for detailed information of Keypad Application Note.

3.10 SPI Interface

SPI interface of SIM7100C is master only. It provides a duplex, synchronous, serial communication link with peripheral devices. Its operation voltage is 1.8V, with clock rates up to 26 MHz.

3.10.1 SPI Pin Description

Table 29: SPI Pin description

Pin name	Pin No.	Function
SPI_CS	9	SPI chip-select; not mandatory in a point-to-point connection
SPI_MISO	7	SPI master in/slave out data
SPI_CLK	6	SPI clock
SPI_MOSI	8	SPI master out/slave in data

Table 30: SPI Electronic characteristic

Symbol	Parameter	Min	Typ	Max	Unit
V_{IH}	High-level input voltage	1.26	1.8	2.1	V
V_{IL}	Low-level input voltage	-0.3	0	0.63	V
V_{OH}	High-level output voltage	1.35	-	1.8	V
V_{OL}	Low-level output voltage	0	0	0.45	V

SIMCOM CONFIDENTIAL FILE

3.11 GPIO Interface

SIM7100C provides a limited number of GPIO pins. All GPIOs can be configured as inputs or outputs. User can use AT Commands to read or write GPIOs status. Refer to ATC document for details.

3.11.1 GPIO Pin Description

Table 31: GPIO Pin description

Pin name	Pin No.	I/O	Function
GPIO1	51	O	Output PIN as LED control for network status. If unused, please keep open.
GPIO4	54	I	Input PIN as RF operating control. H: Normal Mode L:Flight Mode If unused, please keep open .
GPIO40	49	O	Output PIN as operating status indicating of module. H: Power on L: Power off It also can output a clock signal for PCM clock source. If unused, left open.
GPIO41	52	I/O	General input/output PIN. It can be used as wake/interrupt signal to host from module If unused, left open.
GPIO42	53	I/O	General Purpose Input/Output Port. It can be configured as USIM card detecting.
GPIO43	50	I/O	General Purpose Input/Output Port. It can be used as wake/interrupt signal to module from host. If unused, left open.
GPIO44	48	I/O	General Purpose Input/Output Port. It can be configured as SD detecting.

Note: If more GPIOs need to be used, users can configure GPIO on other multiple function interfaces, such as PCM. Please refer to GPIO list.

Table 32: GPIO Electronic characteristic

Symbol	Parameter	Min	Typ	Max	Unit
V_{IH}	High-level input voltage	1.26	1.8	2.1	V
V_{IL}	Low-level input voltage	-0.3	0	0.63	V

V_{OH}	High-level output voltage	1.35	-	1.8	V
V_{OL}	Low-level output voltage	0	0	0.45	V

Note: The output driver current of GPIOs is 2mA.

SIMCOM CONFIDENTIAL FILE

3.12 Network status

GPIO1 is used to control Network Status LED; application circuit is shown below.

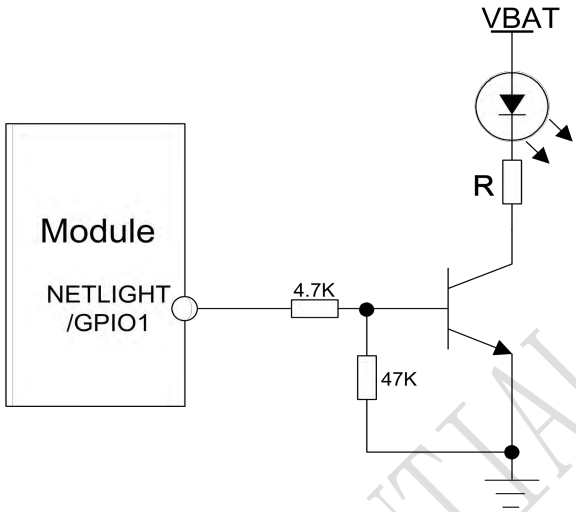

Figure 29: Application circuit

Note: The value of resistor Rx depends on LED characteristic.

Table 33: LED status

LED Status	Module Status
Always On	Searching Network/Call Connect
200ms ON, 200ms OFF	Data Transmit
800ms ON, 800ms OFF	Registered network
Off	Power off / Sleep

3.13 Flight mode control

GPIO4 controls SIM7100C module to enter or exit the Flight mode. In Flight mode, SIM7100C closes RF function to prevent interference with other equipments or minimize current consumption. Bidirectional ESD protection component is suggested to add on GPIO4.

SIMCOM CONFIDENTIAL FILE

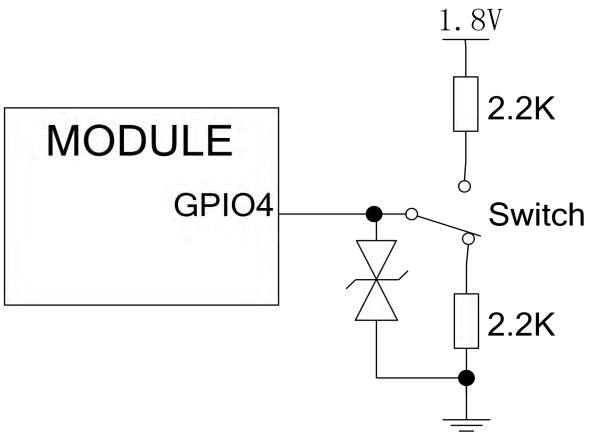

Figure 30: Flight mode switch

Table 34: Flight mode status

GPIO4 Status	Module operation
Low Level	Flight Mode: RF is closed.
High Level	Normal Mode: RF is working.

Note：1. For SIM7100C, GPIO0, GPIO2, GPIO3 and GPIO5 have multiplex function, user can use them as PCM interface to connect extend codec. Refer to section 3.11 and document [1] for details.
2. When the module is powered off, make sure all digital interfaces (PCM UART, etc) connected with peripheral devices have no voltage higher than 0.3V. If users' design cannot meet above conditions, high level voltages maybe occur in GPIO pins because current leakage from above digital interfaces may occur.

3.14 Multi-functional interface

SIM7100C merges functions for various applications. It can enrich users' design and lower the cost of users' hardware.

3.14.1 Sink Current Source

The dedicated pin (ISINK) is intended for driving passive devices， such as LCD backlight, this implementation is VBAT tolerant and suitable for driving white LEDs. The high-current driver can maintain a constant current which is set by *the AT command "AT+ CLEDITST"*, capable of up to 40 mA.

Table 35: Sink Current Electronic characteristic

SIMCOM CONFIDENTIAL FILE

Symbol	Description	Min	Typ	Max	Unit
ISINK	Input voltage	0.5	VDD	VBAT	V
I_O	Input current	5	-	40	mA

Since the driver is ground-referenced current sink, the operating device it drives must form a current path between the VDD pin and the ISINK pin. The following figure is for users reference.

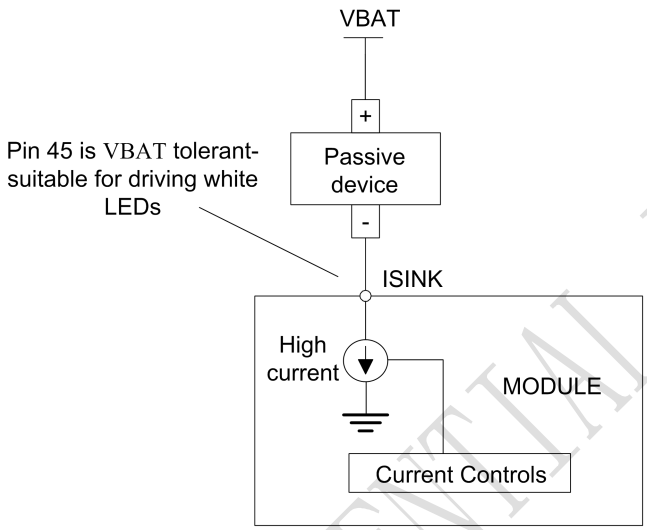

Figure 31: Current drive

Note: The sinking current can be adjusted to meet design requirement through the AT command "AT+ CLEDITST =<0>, <value>".The "value" ranges from 0 to 15,on behalf of the current changes from 0mA to 150mA in steps of 10mA.

3.14.2 ADC

SIM7100C has a dedicated ADC that is available for digitizing analog signals such as battery voltage and so on; it is on PIN 47 and PIN 46 , namely ADC1 and ADC2 . This ADC is 15 bit successive-approximation circuit, and electronic specification is shown in the following table.

Table 36: Electronic Characteristics

Specification	Min	Typ	Max	Unit	Comments/Conditions
Resolution		15		Bits	
Analog input bandwidth	–	100	–	kHz	Analog Vdd = ADC reference 2.4MHz sample rate
Gain Error	-2.5		+2.5	%	
Offset Error	-3.5		+3.5	LSB	
Input Range	GND		2.2V	V	
Input serial resistance		2		kΩ	Sample and hold switch resistance
Power supply current Normal operation		1.5		mA	

SIMCOM CONFIDENTIAL FILE

Power supply current Off		50	200	nA	

User can introduce a signal in the ADC pin directly and use the AT command “AT+CADC” to get the raw data which is between 0 and 32768. The data can be transformed to any type such as voltage, temperature etc. Please refer to *document [1]*.

Note: The input signal voltage value in ADC must not be higher than 2.2V.

3.14.3 LDO

SIM7100C has a LDO power output, namely VDD_EXT. The LDO is available and output voltage is 2.85v by default, rated for 150mA. User can switch the LDO on or off by the AT command “AT+CVAUXS” and configure its output voltage by the AT command “AT+CVAUXV”.

Table 37: Electronic characteristic

Symbol	Description	Min	Typ	Max	Unit
VDD_EXT	Output voltage	1.7	2.85	3.05	V
I_O	Output current	-	-	50	mA

SIMCOM CONFIDENTIAL FILE

4 RF Specification

4.1 RF Specification

Table 38: Conducted transmission power

Frequency	Max	Min
LTE-TDD B41	23dBm +2.7dB	-50dBm ±5dB

Table 39: Operating frequencies

Frequency	Receiving	Transmission
LTE Operating frequencies are shown in following table 34. Note: Operating frequencies of LTE TDD B41 for SIM7100C is 100MHz BW, 2555～2655 MHz		

Table 40: E-UTRA operating bands

E-UTRA Operating Band	Uplink (UL) operating band	Downlink (DL) operating band	Duplex Mode
	BS receive / UE transmit(UL)	BS transmit / UE receive(DL)	
1	1920 MHz~1980 MHz	2110 MHz~2170 MHz	FDD
2	1850 MHz~1910 MHz	1930 MHz~1990 MHz	FDD
3	1710 MHz~1785 MHz	1805 MHz~1880 MHz	FDD
4	1710 MHz~1755 MHz	2110 MHz~2155 MHz	FDD
5	824 MHz~849 MHz	869 MHz~894MHz	FDD
6[1]	830 MHz~840 MHz	875 MHz~885 MHz	FDD
7	2500 MHz~2570 MHz	2620 MHz~2690 MHz	FDD
8	880 MHz~915 MHz	925 MHz~960 MHz	FDD
9	1749.9 MHz~1784.9 MHz	1844.9 MHz~1879.9 MHz	FDD
10	1710 MHz~1770 MHz	2110 MHz~2170 MHz	FDD
11	1427.9 MHz~1447.9 MHz	1475.9 MHz~1495.9 MHz	FDD
12	699 MHz~716 MHz	729 MHz~746 MHz	FDD
13	777 MHz~787 MHz	746 MHz~756 MHz	FDD
14	788 MHz~798 MHz	758 MHz~768 MHz	FDD
17	704 MHz~716 MHz	734 MHz~746 MHz	FDD
18	815 MHz~830 MHz	860 MHz~875 MHz	FDD
19	830 MHz~845 MHz	875 MHz~890 MHz	FDD
20	832 MHz~862 MHz	791 MHz~821 MHz	FDD

21	1447.9 MHz~1462.9 MHz	1495.9 MHz~1510.9 MHz	FDD
22	3410 MHz~3490 MHz	3510 MHz~3590 MHz	FDD
23	2000 MHz~2020 MHz	2180 MHz~2200 MHz	FDD
24	1626.5 MHz~1660.5 MHz	1525 MHz~1559 MHz	FDD
25	1850 MHz~1915 MHz	1930 MHz~1995 MHz	FDD
26	814 MHz~849 MHz	859 MHz~894 MHz	FDD
27	807 MHz~824 MHz	852 MHz~869 MHz	FDD
28	703 MHz~748 MHz	758 MHz~803 MHz	FDD
31	452.5 MHz~457.5 MHz	462.5 MHz~467.5 MHz	FDD
33	1900 MHz~1920 MHz	1900 MHz~1920 MHz	TDD
34	2010 MHz~2025 MHz	2010 MHz~2025 MHz	TDD
35	1850 MHz~1910 MHz	1850 MHz~1910 MHz	TDD
36	1930 MHz~1990 MHz	1930 MHz~1990 MHz	TDD
37	1910 MHz~1930 MHz	1910 MHz~1930 MHz	TDD
38	2570 MHz~2620 MHz	2570 MHz~2620 MHz	TDD
39	1880 MHz~1920 MHz	1880 MHz~1920 MHz	TDD
40	2300 MHz~2400 MHz	2300 MHz~2400 MHz	TDD
41	2496 MHz~2690 MHz	2496 MHz~2690 MHz	TDD
42	3400 MHz~3600 MHz	3400 MHz~3600 MHz	TDD
43	3600 MHz~3800 MHz	3600 MHz~3800 MHz	TDD
44	703 MHz~803 MHz	703 MHz~803 MHz	TDD

Table 41: Conducted receive sensitivity

Frequency	Receive sensitivity
LTE TDD	See table 36.

SIMCOM CONFI

4.2 Antenna Design Guide

SIM7100C provides RF antenna interface. Customer's antenna should be located in the host board and connected to module's antenna pad through micro-strip line or other types of RF trace and the trace impedance must be controlled in 50Ω. SIMCom recommends that the total insertion loss between the antenna pad and antenna should meet the following requirements:

- LTE (F<1GHz) <0.5dB
- LTE (1GHz<F<2GHz) <0.9dB
- LTE (2GHz<F) <1.2dB

To facilitate the antenna tuning and certification test, a RF connector and an antenna matching circuit should be added. The following figure is the recommended circuit.

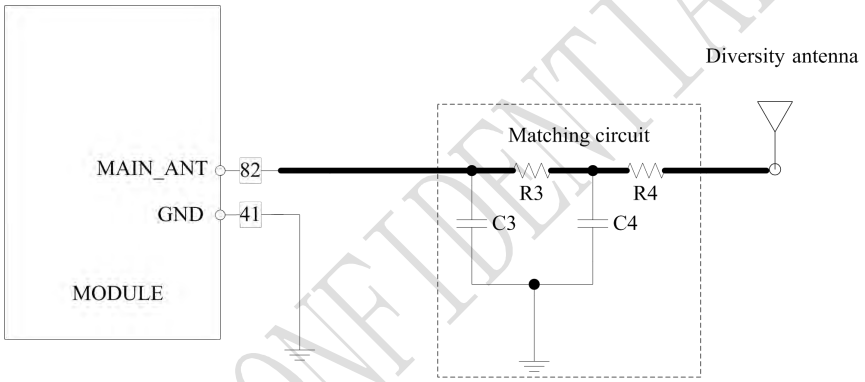

Figure 32: Antenna matching circuit (MAIN_ANT)

In this figure, the components R4,C3,C4 and R4 is used for antenna matching, the value of components can only be got after the antenna tuning, usually, they are provided by antenna vendor. By default, the R3, R4 are 0 Ohm resistors, and the C3, C4 are reserved for tuning.

The RF test connector in the figure is used for the conducted RF performance test, and should be placed as close as to the module's antenna pin. The traces impedance between components must be controlled in 50ohm.

SIMCOM CONFIDENTIAL FILE

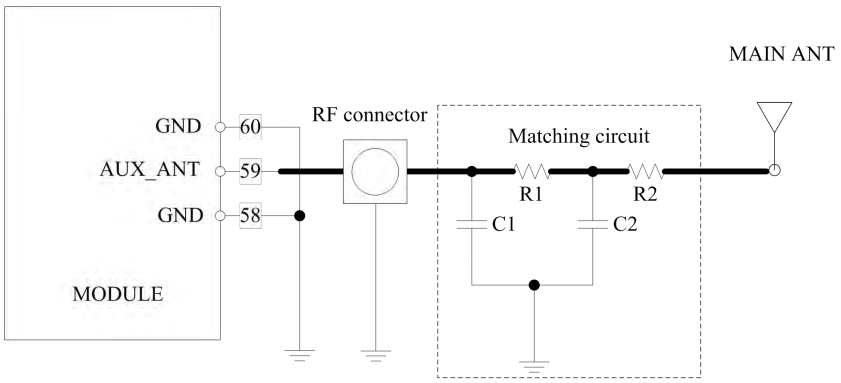

Figure 33: Antenna matching circuit (AUX_ANT)

In above figure, R1, C1, C2 and R2 are used for diversity antenna matching. By default, the R1, R2 are 0 Ohm resistors, and the C1, C2 are reserved for tuning.

4.3 GNSS (GPS and GLONASS)

SIM7100C merges GNSS (GPS/GLONASS) satellite and network information to provide a high-availability solution that offers industry-leading accuracy and performance. This solution performs well, even in very challenging environmental conditions where conventional GNSS receivers fail, and provides a platform to enable wireless operators to address both location-based services and emergency mandates.

4.3.1 GNSS Technical specification

Tracking sensitivity	**-159 dBm（GPS） -158 dBm（GLONASS）**
Cold-start sensitivity	**-148 dBm**
Accuracy (Open Sky)	**2.5m (CEP50)**
TTFF (Open Sky)	**Hot start <1s Cold start 35s**
Receiver Type	**16-channel, C/A Code**
	GPS L1 Frequency (1575.42±1.023MHz),
	GLONASS: 1597.5~1605.8 MHz
Update rate	**Default 1 Hz**

Note: Performance will vary depending on the environment, antenna type and signal conditions and so on.

4.3.2 GNSS Operate Mode

SIM7100C supports both A-GPS and S-GPS, and then provides three operating modes: mobile-assisted mode, mobile-based mode and standalone mode. A-GPS includes mobile-assisted and mobile-based mode.

SIMCOM CONFIDENTIAL FILE

In mobile-assisted mode, when a request for position location is issued, available network information is provided to the location server (e.g. Cell-ID) and assistance is requested from the location server. The location server sends the assistance information to the handset. The handset/mobile unit measures the GNSS observables and provides the GNSS measurements along with available network data (that is appropriate for the given air interface technology) to the location server. The location server then calculates the position location and returns results to the requesting entity.

In mobile-based mode, the assistant data provided by the location server encompasses not only the information required to assist the handset in measuring the satellite signals, but also the information required to calculate the handset's position. Therefore, rather than provide the GNSS measurements and available network data back to the location server, the mobile calculates the location on the handset and passes the result to the requesting entity.

In standalone (autonomous) mode, the handset demodulates the data directly from the GNSS satellites. This mode has some reduced cold-start sensitivity, and a longer time to first fix as compared to the assisted modes. However, it requires no server interaction and works out of network coverage.

This combination of GNSS measurements and available network information provides:

- High-sensitivity solution that works in all terrains: Indoor, outdoor, urban, and rural
- High availability that is enabled by using both satellite and network information

Therefore, while network solutions typically perform poorly in rural areas and areas of poor cell geometry/density, and while unassisted, GNSS-only solutions typically perform poorly indoors. The SIM7100C GNSS solution provides optimal time to fix, accuracy, sensitivity, availability, and reduced network utilization in both of these environments, depending on the given condition.

SIMCOM CONFIDENTIAL FILE

5 Reliability and Operating Characteristics

5.1 Electronic Characteristics

Absolute maximum rating for digital and analog pins of SIM7100C are listed in the following table:

Table 42: Absolute maximum ratings

Parameter	Min	Max	Unit
Voltage at digital pins (1.8v digital I/O)	-0.3	2.1	V
Voltage at VBAT	-0.5	6.0	V
Voltage at VRTC	2	3.25	V
Voltage at USB_VBUS	-0.5	6.0	V

Table 43: Recommended operating ratings

Parameter	Min	Typ	Max	Unit
Voltage at digital pins (1.8v digital I/O)	0	1.8	1.95	V
Voltage at VBAT	3.4	3.8	4.2	V
Voltage at VRTC	2	-	3.2	V
Voltage at USB_VBUS	3	5	5.25	V

The operating temperature and power specification is listed in the following table.

Table 44: Operating temperature

Parameter	Min	Typ	Max	Unit
Normal operation temperature	-30	25	80	℃
Extended operation temperature	-40	25	85	℃
Storage temperature	-45	25	+90	℃

Note: The module is fully functional in all the temperature range. Temperatures outside of the range -30℃ ~ +80℃ might slightly deviate from ETSI specifications.

5.2 Operating Mode

5.2.1 Operating Mode

The table below summarizes the various operating modes of SIM7100Cx.

Table 45: Operating mode

Mode	Status	Function	
Normal operation	Sleep	LTE	Module will automatically go into sleep mode if the conditions of sleep mode are enabling and there is no on air and no hardware interrupt (such as USB wake-up operation or data on serial port). In this case, the current consumption of module will be reduced to the minimal level. In sleep mode, the module can still receive paging message and SMS.
	Idle	LTE	Software is active. Module is registered to the LTE network, and the module is ready to communicate.
	Standby	LTE	Module is ready for EDGE/HSPA+ /LTE data transfer, but no data is currently sent or received. In this case, power consumption depends on network settings and EDGE/HSPA+ /LTE configuration.
	Data transfer	LTE	There is EDGE/HSPA+/LTE data transfer in progress. In this case, power consumption is related to network settings (e.g. power control level); uplink/downlink data rates and GPRS configuration (e.g. used multi-slot settings).
Minimum functionality mode		AT command "AT+CFUN" can be used to set the module to a minimum functionality mode without removing the power supply. In this mode, the RF part of the module will not work or the USIM card will not be accessible, or both RF part and USIM card will be closed, and the serial port is still accessible. The power consumption in this mode is lower than normal mode.	

5.2.2 Minimize Power Consumption

There are two modes that SIM7100C achieves low power consumption.

5.2.3 Sleep mode

If peripheral equipments stops working, and there is no on air or hardware interrupts (such as GPIO interrupts or data on UART), SIM7100C will enter sleep mode automatically. In this mode, SIM7100C can still receive paging， voice call or SMS from network. If USB interface of SIM7100C is connected to host CPU, but host CPU does not support USB suspending, then SIM7100C will not enter sleep mode. After USB is disconnected, SIM7100C will enter sleep mode.

Note: When UART interface is connected with host CPU, SIM7100C cannot enter sleep mode until RXD is pulled down by the host CPU. If the module is in the idle mode, make sure to pull the RXD to low level by host CPU. SIMCom recommends using GPIO43 or DTR to wake up the module from host CPU and to use GPIO41 or RI to wake up the host CPU. Before designing, pay attention to how to realize waking function and refer to Document[24] and Document[25] for more detail.

5.2.4 Minimum functionality mode

Minimum functionality mode ceases a majority function of module, thus minimizing the power consumption. This mode is set by the AT command which provides a choice of the functionality levels.

- AT+CFUN=0: Minimum functionality
- AT+CFUN=1: Full functionality (Default)
- AT+CFUN=4: Disable RF function of the module (Flight mode)

If SIM7100C has been set to minimum functionality mode, the module will firstly enter sleep mode, then the RF function and SIM card function will be closed. In this case, the serial port is still accessible, but RF function or SIM card will be unavailable. When SIM7100C is in minimum functionality or flight mode, it can return to full functionality by the AT command "AT+CFUN=1".

5.3 Current Consumption

The current consumption in suspended mode and without USB connection is listed in the table below. Here, "suspended mode" means that SIM7100C is connected to USB bus, but it does not transfer data.

Table 46: Current consumption

OFF state		
OFF state supply current	Power down	10uA

5.4 EMC and ESD Notes

EMC tests should be performed to detect any potential problems. Possible harmful emissions radiate by the application to the RF receiver in the receiver band. RF emissions interfere with audio input/output. It is recommended to shield the sensitive components and trace with common ground and user can add beads where necessary.

Normally SIM7100C is mounted on customer host board. Although some ESD components have been added in SIM7100C, to prevent ESD, user should put some ESD components on customers' board. The ESD components should be placed beside the connectors which human body might touch, such as SIM card holder, audio jacks, switches, keys, etc. The following table is the SIM7100C ESD measurement performance; the results are from SIMCom EVB test.

Table 47: The ESD performance measurement table (Temperature: 25℃, Humidity: 45%)

SIMCOM CONFIDENTIAL FILE

Part	Contact discharge	Air discharge
VBAT,GND	TBD	TBD
UART,USB	TBD	TBD
Antenna port	TBD	TBD
Other PADs	TBD	TBD

6 Guide for Production

6.1 Top and Bottom View of SIM7100C

Figure 34: Top and bottom view of SIM7100C

These test points are only used for module manufacturing and testing. They are not for customer's application.

6.2 Typical Solder Reflow Profile

For customer convenience, SIMCom provides a typical example for a commonly used soldering profile. In final board assembly, the typical solder reflow profile will be determined by the largest component on the board, as well as the type of solder/flux used and PCB stack-up. Therefore the soldering profile shown below is only a generic recommendation and should be adjusted to the specific application and manufacturing constraints.

SIMCOM CONFIDENTIAL FILE

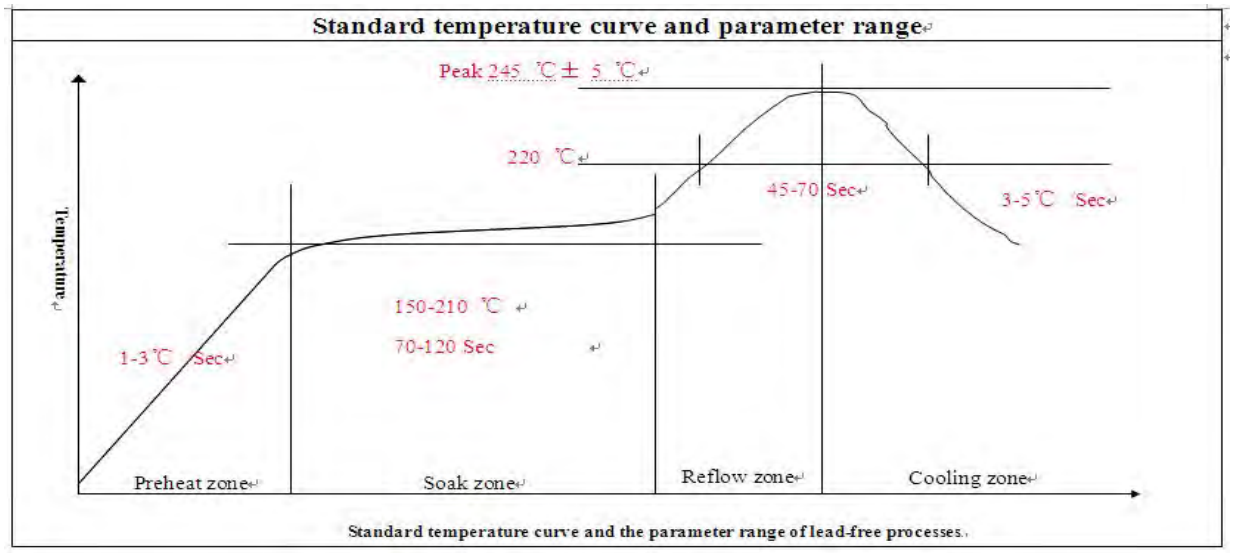

Figure 35: The ramp-soak-spike reflow profile of SIM7100C

For details about secondary SMT, please refer to *document [26]*.

6.3 Moisture Sensitivity Level (MSL)

SIM7100C is qualified to Moisture Sensitivity Level (MSL) 5 in accordance with JEDEC J-STD-033. After the prescribed time limit exceeded, users should bake modules for 192 hours in drying equipment (<5% RH) at 40° C +5° C/-0° C, or 72 hours at 85° C +5° C/-5° C. Note that plastic tray is not heat-resistant, users must not use the tray to bake at 85° C or the tray may be damaged.

Table 48: Moisture sensitivity level and floor life

Moisture Sensitivity Level (MSL)	Floor Life (out of bag) at factory ambient≤30° C/60% RH or as stated
1	Unlimited at ≦30℃/85% RH
2	1 year
2a	4 weeks
3	168 hours
4	72 hours
5	48 hours
5a	24 hours
6	Mandatory bake before use. After bake, it must be reflowed within the time limit specified on the label.

NOTE: For product handling, storage, processing, IPC / JEDEC J-STD-033 must be followed.

CONFIDENTIAL

6.4 Stencil Foil Design Recommendation

The recommended thickness of stencil foil is more than 0.15mm.

SIMCOM CONFIDENTIAL FILE

Appendix

A. Reference Design

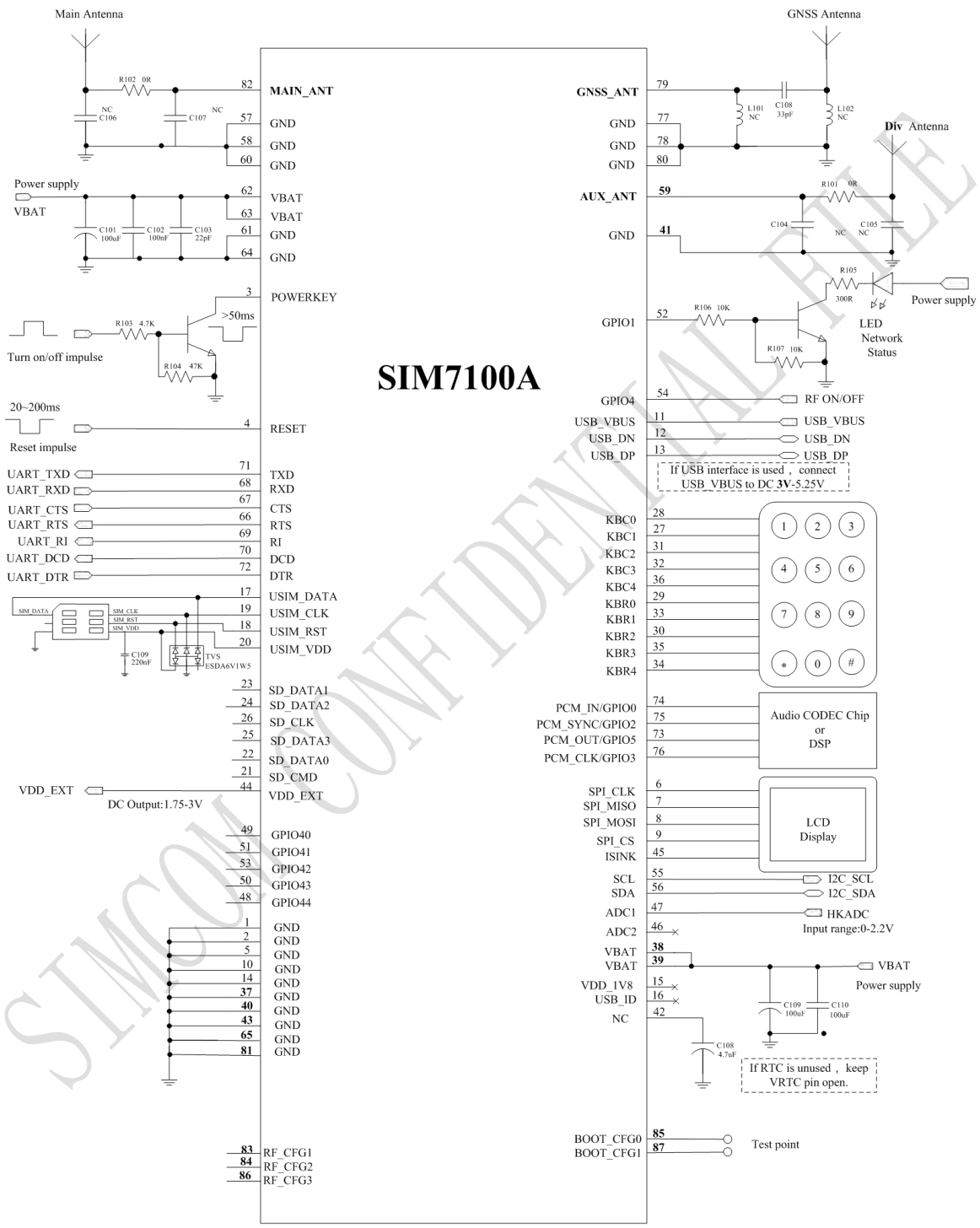

Figure 36: Reference design

SIMCOM CONFIDENTIAL FILE

B. SIM7100C GPIOs List

Table 49: SIM7100C GPIOs list

Name	GPIO Index	Default Function	Alternate Function
PCM_IN	0	GPIO Interrupt [LEVEL/LOW]	PCM_IN
STATUS_LED	1	Status led	GPIO1
PCM_SYNC	2	GPIO [IN]	PCM_SYNC
PCM_CLK	3	GPIO [OUT/LOW]	PCM_CLK
RF_SWITCH	4	RF Switch	GPIO4
PCM_OUT	5	GPIO [OUT/LOW]	PCM_OUT
KBR4	6	Keypad	GPIO
KBR3	7	Keypad	GPIO
KBR2	8	Keypad	GPIO
KBR1	9	Keypad	GPIO
KBR0	10	Keypad	GPIO
KBC4	11	Keypad	GPIO
KBC3	12	Keypad	GPIO
KBC2	13	Keypad	GPIO
KBC1	14	Keypad	GPIO
KBC0	15	Keypad	GPIO
CTS	33	CTS	GPIO
RTS	34	RTS	GPIO
DTR	35	DTR wake up module	GPIO
DCD	36	DCD	GPIO
RI	37	RI wake up host	GPIO
GPIO40	40	Module power up status	GPIO
GPIO41	41	Wake up host	GPIO
GPIO42	42	GPIO[OUT/LOW]	GPIO
GPIO43	43	Wake up module	GPIO
GPIO44	44	GPIO[OUT/LOW]	GPIO

C. Digital I/O Characteristics

Table 50: Digital I/O characteristics

Parameter	Description	1.8V Digital I/O			Unit
		Min	Typ	Max	
V_{IH}	High-level input voltage	1.26	1.8	2.1	V
V_{IL}	Low-level input voltage	-0.3	0	0.63	V
V_{OH}	High-level output voltage	1.35	-	1.8	V

V_{OL}	Low-level output voltage	0	0	0.45	V
IOH	High-level output current	-	1	-	mA
IOL	Low-level output current	-	-1	-	mA
I_{IH}	Input high leakage current	-	-	1	uA
I_{IL}	Input low leakage current	-1	-	-	uA
C_{IN}	Input capacitance	-	-	7	pF

Note: These parameters are for digital interface pins, such as keypad, GPIO, I²C, UART, SPI. Digital I/O specifications under both conditions are presented in the above tables.

D. Related Documents

Table 51: Related documents

SN	Document name	Remark
[1]	SIM7100C_ATC_V1.00	SIM7100C_ATC_V1.00
[2]	ITU-T Draft new recommendationV.25ter	Serial asynchronous automatic dialing and control
[3]	3GPP TS 51.010-1	Digital cellular telecommunications system (Release 5); Mobile Station (MS) conformance specification
[4]	3GPP TS 34.124	Electromagnetic Compatibility (EMC) for mobile terminals and ancillary equipment.
[5]	3GPP TS 34.121	Electromagnetic Compatibility (EMC) for mobile terminals and ancillary equipment.
[6]	3GPP TS 34.123-1	Technical Specification Group Radio Access Network; Terminal conformance specification; Radio transmission and reception (FDD)
[7]	3GPP TS 34.123-3	User Equipment (UE) conformance specification; Part 3: Abstract Test Suites.
[8]	EN 301 908-02 V2.2.1	Electromagnetic compatibility and Radio spectrum Matters (ERM); Base Stations (BS) and User Equipment (UE) for IMT-2000. Third Generation cellular networks; Part 2: Harmonized EN for IMT-2000, CDMA Direct Spread (UTRA FDD) (UE) covering essential requirements of article 3.2 of the R&TTE Directive
[9]	EN 301 489-24 V1.2.1	Electromagnetic compatibility and Radio Spectrum Matters (ERM); Electromagnetic Compatibility (EMC) standard for radio equipment and services; Part 24: Specific conditions for IMT-2000 CDMA Direct Spread (UTRA) for Mobile and portable (UE) radio and ancillary equipment

[10]	IEC/EN60950-1(2001)	Safety of information technology equipment (2000)
[11]	3GPP TS 51.010-1	Digital cellular telecommunications system (Release 5); Mobile Station (MS) conformance specification
[12]	GCF-CC V3.23.1	Global Certification Forum - Certification Criteria
[13]	2002/95/EC	Directive of the European Parliament and of the Council of 27 January 2003 on the restriction of the use of certain hazardous substances in electrical and electronic equipment (RoHS)
[14]	Audio Application Note V1.01	Audio Application Note V1.01
[15]	Reserved	Reserved
[16]	Keypad Application Note V1.01	Keypad Application Note V1.01
[17]	*Sleep_Application_Note*	*Sleep_Application_Note*
[18]	*Waking_up_Application_Note*	*Waking_up_Application_Note*
[19]	Module secondary-SMT-UGD	SMT Note
[20]	SIM5xxx_Automatic_POWER_ON_Application_Note	SIM5xxx_Automatic_POWER_ON_Application_Note

SIMCOM Co

E. Terms and Abbreviations

Table 52: Terms and Abbreviations

Abbreviation	Description
ADC	Analog-to-Digital Converter
ARP	Antenna Reference Point
BER	Bit Error Rate
BTS	Base Transceiver Station
CS	Coding Scheme
CSD	Circuit Switched Data

CTS	Clear to Send
DAC	Digital-to-Analog Converter
DRX	Discontinuous Reception
DSP	Digital Signal Processor
DTE	Data Terminal Equipment (typically computer, terminal, printer)
DTR	Data Terminal Ready
DTX	Discontinuous Transmission
EFR	Enhanced Full Rate
EGSM	Enhanced GSM
EMC	Electromagnetic Compatibility
ESD	Electrostatic Discharge
ETS	European Telecommunication Standard
FCC	Federal Communications Commission (U.S.)
FD	SIM fix dialing phonebook
FDMA	Frequency Division Multiple Access
FR	Full Rate
GMSK	Gaussian Minimum Shift Keying
GPRS	General Packet Radio Service
GSM	Global Standard for Mobile Communications
HR	Half Rate
I2C	Inter-Integrated Circuit
IMEI	International Mobile Equipment Identity
Inorm	Normal Current
Imax	Maximum Load Current
kbps	Kilo bits per second
Li-Ion	Lithium-Ion
MO	Mobile Originated
MS	Mobile Station (GSM engine), also referred to as TE
MT	Mobile Terminated
PAP	Password Authentication Protocol
PBCCH	Packet Switched Broadcast Control Channel
PCB	Printed Circuit Board
PCS	Personal Communication System, also referred to as GSM 1900
RF	Radio Frequency
RMS	Root Mean Square (value)
RTC	Real Time Clock
Rx	Receive Direction
SIM	Subscriber Identification Module
SMS	Short Message Service
SPI	serial peripheral interface
TDMA	Time Division Multiple Access
TE	Terminal Equipment, also referred to as DTE
TX	Transmit Direction
UART	Universal Asynchronous Receiver & Transmitter
VSWR	Voltage Standing Wave Ratio
Vmax	Maximum Voltage Value
Vnorm	Normal Voltage Value
Vmin	Minimum Voltage Value
VIHmax	Maximum Input High Level Voltage Value

VIHmin	Minimum Input High Level Voltage Value
VILmax	Maximum Input Low Level Voltage Value
VILmin	Minimum Input Low Level Voltage Value
VImax	Absolute Maximum Input Voltage Value
VImin	Absolute Minimum Input Voltage Value
VOHmax	Maximum Output High Level Voltage Value
VOHmin	Minimum Output High Level Voltage Value
VOLmax	Maximum Output Low Level Voltage Value
VOLmin	Minimum Output Low Level Voltage Value
SM	SIM phonebook
NC	Not connect
EDGE	Enhanced data rates for GSM evolution
HSDPA	High Speed Downlink Packet Access
HSUPA	High Speed Uplink Packet Access
ZIF	Zero intermediate frequency
WCDMA	Wideband Code Division Multiple Access
VCTCXO	Voltage control temperature-compensated crystal oscillator
USIM	Universal subscriber identity module
UMTS	Universal mobile telecommunications system
UART	Universal asynchronous receiver transmitter

SIMCOM CONFIDENTIAL

F. Safety Caution

Table 53: Safety caution

Marks	Requirements
	When in a hospital or other health care facility, observe the restrictions about the use of mobiles. Switch the cellular terminal or mobile off, medical equipment may be sensitive to not operate normally for RF energy interference.
	Switch off the cellular terminal or mobile before boarding an aircraft. Make sure it is switched off. The operation of wireless appliances in an aircraft is forbidden to prevent interference with communication systems. Forget to think much of these

	instructions may lead to the flight safety or offend against local legal action, or both.
	Do not operate the cellular terminal or mobile in the presence of flammable gases or fumes. Switch off the cellular terminal when you are near petrol stations, fuel depots, chemical plants or where blasting operations are in progress. Operation of any electrical equipment in potentially explosive atmospheres can constitute a safety hazard.
	Your cellular terminal or mobile receives and transmits radio frequency energy while switched on. RF interference can occur if it is used close to TV sets, radios, computers or other electric equipment.
	Road safety comes first! Do not use a hand-held cellular terminal or mobile when driving a vehicle, unless it is securely mounted in a holder for hands free operation. Before making a call with a hand-held terminal or mobile, park the vehicle.
	GSM cellular terminals or mobiles operate over radio frequency signals and cellular networks and cannot be guaranteed to connect in all conditions, for example no mobile fee or a invalid SIM card. While you are in this condition and need emergent help, please remember using emergency calls. In order to make or receive calls, the cellular terminal or mobile must be switched on and in a service area with adequate cellular signal strength. Some networks do not allow for emergency call if certain network services or phone features are in use (e.g. lock functions, fixed dialing etc.). You may have to deactivate those features before you can make an emergency call. Also, some networks require that a valid SIM card be properly inserted in the cellular terminal or mobile.

SIMCOM CONF

Contact us:

Shanghai SIMCom Wireless Solutions Ltd.

Add: SIM Technology Building, No.633, Jinzhong Road, Changning District, Shanghai P.R. China 200335

Tel: +86 21 3235 3300

Fax: +86 21 3235 3301

URL: www.sim.com/wm

SIMCOM CONFIDENTIAL FILE