ELS62

Hardware Interface Description

1VV0301851 - Rev. 1
v01.100a
2023-9-27
Released
Confidential

Technical Documentation

Contents

Contents 2
Tables 5
Figures 6
1 Applicability Table 8
2 Introduction 9
2.1 Scope 9
2.2 Audience 9
2.3 Contact Information, Support 9
2.4 Conventions 9
2.5 Terms and Conditions 10
2.6 Disclaimer 10
2.7 Key Features at a Glance 11
2.8 ELS62 System Overview 16
2.9 Circuit Concept 17
3 Interface Characteristics 19
3.1 Application Interface 19
3.1.1 Pad Assignment 19
3.1.2 Signal Properties 24
3.1.2.1 Absolute Maximum Ratings 30
3.1.3 USB Interface 31
3.1.4 Serial Interface ASC0 32
3.1.5 Serial Interface ASC1 34
3.1.6 UICC/SIM/USIM Interface 35
3.1.6.1 Enhanced ESD Protection for SIM Interface 37
3.1.7 Digital Audio Interface (DAI) 38
3.1.7.1 Pulse Code Modulation Interface (PCM) 38
3.1.7.2 Inter IC Sound Interface (I^2S) 39
3.1.7.3 Solutions for the Digital Audio Interface 40
3.1.8 Analog Audio Interface 41
3.1.8.1 Microphone Inputs and Supply 41
3.1.8.2 Loudspeaker Output 43
3.1.8.3 Electrical Characteristics of the Voiceband Part 44
3.1.9 GPIO Interface 45
3.1.10 Control Signals 47
3.1.10.1 Status LED 47
3.1.10.2 Power Indication Circuit 47
3.1.10.3 Host Wakeup 48
3.1.10.4 Fast Shutdown 48
3.2 RF Antenna Interface 50
3.2.1 Antenna Interface Specifications 51
3.2.2 Antenna Installation 57
3.2.3 RF Line Routing Design 59
3.2.3.1 Line Arrangement Examples 59
3.2.3.2 Routing Example 63

3.3 Sample Application ... 65
3.3.1 Sample Level Conversion Circuit ... 67

4 Operating Characteristics ... 68

4.1 Operating Modes ... 68
4.2 Power Up/Power Down Scenarios ... 69
4.2.1 Turn on ELS62 ... 69
4.2.1.1 Connecting ELS62 BATT+ Lines ... 69
4.2.1.2 Switch on ELS62 Using ON Signal ... 70
4.2.1.3 Automatic Power On ... 71
4.2.2 Restart ELS62 ... 72
4.2.2.1 Restart ELS62 via AT+CFUN Command ... 72
4.2.2.2 Restart ELS62 Using EMERG_RST ... 72
4.2.3 Signal States after Startup ... 73
4.2.4 Turn off ELS62 ... 74
4.2.4.1 Switch off ELS62 Using AT Command ... 74
4.2.5 Automatic Shutdown ... 75
4.2.5.1 Thermal Shutdown ... 75
4.2.5.2 Undervoltage Shutdown ... 76
4.2.5.3 Overvoltage Shutdown ... 77
4.3 Power Saving ... 77
4.3.1 Power Saving while Attached to GSM Networks ... 78
4.3.2 Power Saving while Attached to LTE Networks ... 78
4.3.3 Wake-up via RTS0 ... 79
4.4 Power Supply ... 80
4.4.1 Power Supply Ratings ... 80
4.4.2 Minimizing Power Losses ... 85
4.4.3 Measuring the Supply Voltage (VBATT+) ... 86
4.4.4 Monitoring Power Supply by AT Command ... 86
4.5 Operating Temperatures ... 86
4.6 Electrostatic Discharge ... 87
4.7 Blocking against RF on Interface Lines ... 87
4.8 Reliability Characteristics ... 90

5 Mechanical Dimensions, Mounting and Packaging ... 91

5.1 Mechanical Dimensions of ELS62 ... 91
5.2 Mounting ELS62 onto the Application Platform ... 93
5.2.1 SMT PCB Assembly ... 93
5.2.1.1 Land Pattern and Stencil ... 93
5.2.1.2 Board Level Characterization ... 95
5.2.2 Moisture Sensitivity Level ... 95
5.2.3 Soldering Conditions and Temperature ... 95
5.2.3.1 Reflow Profile ... 95
5.2.3.2 Maximum Temperature and Duration ... 96
5.2.4 Durability and Mechanical Handling ... 97
5.2.4.1 Storage Conditions ... 97
5.2.4.2 Processing Life ... 98
5.2.4.3 Baking ... 98
5.2.4.4 Electrostatic Discharge ... 98

5.3 Packaging 98
5.3.1 Tape and Reel 98
5.3.1.1 Orientation 99
5.3.1.2 Barcode Label 100
5.3.2 Shipping Materials 101
5.3.2.1 Moisture Barrier Bag 101
5.3.2.2 Transportation Box 103
5.3.3 Trays 105

6 Regulatory and Type Approval Information 106

6.1 Directives and Standards 106
6.1.1 IEC 62368-1 Classification 109
6.2 SAR requirements specific to portable mobiles 112
6.3 Reference Equipment for Type Approval 113
6.4 Compliance with FCC Rules and Regulations for ELS62-W 114

7 Document Information 117

7.1 Revision History 117
7.2 Related Documents 120
7.3 Terms and Abbreviations 120
7.4 Safety Precaution Notes 124

8 Appendix 126

8.1 List of Parts and Accessories 126
8.2 Module Label Information 128

Tables

Table 1: Applicability table ... 8
Table 2: Key Features ... 11
Table 3: Pad assignments ... 20
Table 4: Signal properties ... 24
Table 5: Absolute maximum ratings ... 30
Table 6: Signals of the SIM interface (SMT application interface) ... 36
Table 7: Overview of DAI/PCM lines ... 38
Table 8: Overview of DAI/I²S lines ... 40
Table 9: Codec register settings ... 41
Table 10: Audio parameters adjustable by AT command ... 44
Table 11: GPIO lines and possible alternative assignment ... 45
Table 12: Host wakeup lines ... 48
Table 13: Return loss in the active band ... 50
Table 14: RF Antenna interface GSM/LTE (at normal temperature and voltage range) ... 51
Table 15: Overview of operating modes ... 68
Table 16: Signal states ... 73
Table 17: Temperature dependent behavior ... 76
Table 18: Voltage supply ratings ... 80
Table 19: Current consumption ratings ... 81
Table 20: Board temperature ... 86
Table 21: Electrostatic values ... 87
Table 22: EMI measures on the application interface ... 88
Table 23: Summary of reliability test conditions ... 90
Table 24: Reflow temperature ratings ... 96
Table 25: Storage conditions ... 97
Table 26: VP Box label information ... 104
Table 27: Directives ... 106
Table 28: Standards of North American type approval ... 106
Table 29: Standards of European type approval ... 107
Table 30: Standards (Statutory Instruments) for UK ... 107
Table 31: Requirements of quality ... 108
Table 32: Standards of the Ministry of Information Industry of the People's Republic of China ... 108
Table 33: Toxic or hazardous substances or elements with defined concentration limits ... 109
Table 34: IEC 62368-1 Classification ... 110
Table 35: Antenna gain limits for FCC (for ELS62-W variant only) ... 114
Table 36: List of parts and accessories ... 126
Table 37: Molex sales contacts (subject to change) ... 127
Table 38: ELS62 label information ... 128
Table 39: Date code table ... 128

Figures

Figure 1: ELS62 system overview 16
Figure 2: ELS62 block diagram 17
Figure 3: ELS62 RF section block diagram 18
Figure 4: ELS62 bottom view: Pad assignments 22
Figure 5: ELS62 top view: Pad assignments 23
Figure 6: USB circuit 31
Figure 7: Serial interface ASC0 32
Figure 8: ASC0 startup behavior 33
Figure 9: Serial interface ASC1 34
Figure 10: ASC1 startup behavior 35
Figure 11: External UICC/SIM/USIM card holder circuit 36
Figure 12: SIM interface - enhanced ESD protection 37
Figure 13: Long frame PCM timing, 8kHz 39
Figure 14: Short frame PCM timing, 16kHz 39
Figure 15: I²S timing, 8kHz sample rate 40
Figure 16: Block circuit connection for module's DAI interface to codec chip NAU8822A 40
Figure 17: Single ended microphone connection 41
Figure 18: Differential microphone connection 42
Figure 19: Line input 42
Figure 20: Differential loudspeaker connection 43
Figure 21: Line output connection 43
Figure 22: Audio programming model 44
Figure 23: GPIO startup behavior 46
Figure 24: Status signaling with LED driver 47
Figure 25: Power indication circuit 48
Figure 26: Fast shutdown timing 49
Figure 27: Antenna pads (bottom view) 58
Figure 28: Embedded Stripline with 65µm prepreg (1080) and 710µm core 59
Figure 29: Micro-Stripline on 1.0mm standard FR4 2-layer PCB - example 1 60
Figure 30: Micro-Stripline on 1.0mm Standard FR4 PCB - example 2 61
Figure 31: Micro-Stripline on 1.5mm Standard FR4 PCB - example 1 62
Figure 32: Micro-Stripline on 1.5mm Standard FR4 PCB - example 2 63
Figure 33: Routing to application's RF connector - top view 64
Figure 34: Routing detail 64
Figure 35: Schematic diagram of ELS62 sample application 66
Figure 36: Sample level conversion circuit 67
Figure 37: Sample circuit for applying power using an external µC 69
Figure 38: ON circuit options 70
Figure 39: ON timing 71
Figure 40: Automatic ON circuit 71

Figure 41: Emergency reset timing 72
Figure 42: Switch off behavior 75
Figure 43: Power saving and paging in GSM networks 78
Figure 44: Power saving and paging in LTE networks 79
Figure 45: Wake-up via RTS0 79
Figure 46: Power supply limits during transmit burst 85
Figure 47: Position of reference points BATT+ and GND 86
Figure 48: EMI circuits 88
Figure 49: ELS62 – top and bottom views 91
Figure 50: Dimensions of ELS62 (all dimensions in mm) 92
Figure 51: Land pattern (top view) 93
Figure 52: Recommended design for 110µm thick stencil (top view) 94
Figure 53: Recommended design for 150µm thick stencil (top view) 94
Figure 54: Reflow Profile 95
Figure 55: Carrier tape 99
Figure 56: Reel direction 99
Figure 57: Barcode label on tape reel 100
Figure 58: Barcode label on tape reel - layout 100
Figure 59: Moisture barrier bag (MBB) with imprint 101
Figure 60: Moisture Sensitivity Label 102
Figure 61: Humidity Indicator Card - HIC 103
Figure 62: Sample of VP box label 104
Figure 63: Tray dimensions 105
Figure 64: Reference equipment for Type Approval 113
Figure 65: ELS62 Label 128

1 Applicability Table

Table 1: **Applicability table**

Products
ELS62-W v01.100a
ELS62-E v01.100a
ELS62-I v01.100a
ELS62-BR v01.100a
ELS62-C v01.100a

2 Introduction

2.1 Scope

This document[1] describes the hardware of the Cinterion® ELS62 module. It helps you quickly retrieve interface specifications, electrical and mechanical details and information on the requirements to be considered for integrating further components.

Note: The Cinterion® ELS62 module variants differ mainly in the supported frequency bands. Wherever necessary, a note is made to differentiate between the product variants.

2.2 Audience

This document is intended for system integrators that are using the ELS62 modules in their products.

2.3 Contact Information, Support

For technical support and general questions, e-mail:

- TS-EMEA@telit.com
- TS-AMERICAS@telit.com
- TS-APAC@telit.com
- TS-SRD@telit.com
- TS-ONEEDGE@telit.com

Alternatively, use: https://www.telit.com/contact-us/

Product information and technical documents are accessible 24/7 on our website: https://www.telit.com

2.4 Conventions

Note: Provide advice and suggestions that may be useful when integrating the module.
Danger: This information MUST be followed, or catastrophic equipment failure or personal injury may occur.
ESD Risk: Notifies the user to take proper grounding precautions before handling the product.
Warning: Alerts the user on important steps about the module integration.

All dates are in ISO 8601 format, that is YYYY-MM-DD.

1. The document is effective only if listed in the appropriate Release Notes as part of the technical documentation delivered with your Telit Cinterion product.

2.5 Terms and Conditions

Refer to https://www.telit.com/hardware-terms-conditions/.

2.6 Disclaimer

THE MATERIAL IN THIS DOCUMENT IS FOR INFORMATIONAL PURPOSES ONLY. TELIT CINTERION RESERVES THE RIGHT TO MAKE CHANGES TO THE PRODUCTS DESCRIBED HEREIN. THE SPECIFICATIONS IN THIS DOCUMENT ARE SUBJECT TO CHANGE AT THE DISCRETION OF TELIT CINTERION WITHOUT PRIOR NOTICE. THIS DOCUMENT IS PROVIDED ON "AS IS" BASIS ONLY AND MAY CONTAIN DEFICIENCIES OR INADEQUACIES. TELIT CINTERION DOES NOT ASSUME ANY LIABILITY FOR INFORMATION PROVIDED IN THE DOCUMENT OR ARISING OUT OF THE APPLICATION OR USE OF ANY PRODUCT DESCRIBED HEREIN.

TELIT CINTERION GRANTS A NON-EXCLUSIVE RIGHT TO USE THE DOCUMENT. THE RECIPIENT SHALL NOT COPY, MODIFY, DISCLOSE, OR REPRODUCE THE DOCUMENT EXCEPT AS SPECIFICALLY AUTHORIZED BY TELIT CINTERION.

TELIT CINTERION AND THE TELIT CINTERION LOGO, ARE TRADEMARKS OF TELIT CINTERION AND ARE REGISTERED IN CERTAIN COUNTRIES. ALL OTHER REGISTERED TRADEMARKS OR TRADEMARKS MENTIONED IN THIS DOCUMENT ARE THE PROPERTY OF THEIR RESPECTIVE OWNERS AND ARE EXPRESSLY RESERVED BY TELIT CINTERION (AND ITS LICENSORS).

2.7 Key Features at a Glance

Table 2: **Key Features**

Feature	Implementation
General	
Frequency bands	ELS62-W GSM/GPRS/EDGE bands: 850 (BdV) / 900 (BdVIII) / 1800 (BdIII) / 1900 (BdII) LTE bands: 2100 (Bd1) / 1900 (Bd2) / 1800 (Bd3) / 2100 (Bd4) / 850 (Bd5) / 2600 (Bd7) / 900 (Bd8) / 800 (Bd20) / 700 (Bd28) / TDD2600 (Bd38) / TDD2300 (Bd40) / TDD2500 (Bd41)[1] / 2100 (Bd66) ELS62-E GSM/GPRS/EGPRS bands: 900 (BdVIII) / 1800 (BdIII) LTE bands: 2100 (Bd1) / 1800 (Bd3) / 2600 (Bd7) / 900 (Bd8) / 800 (Bd20) / 700 (Bd28) ELS62-I GSM/GPRS/EGPRS bands: 900 (BdVIII) / 1800 (BdIII) LTE bands: 2100 (Bd1) / 1800 (Bd3) / 850 (Bd5) / 900 (Bd8) / TDD2300 (Bd40) / TDD2500 (Bd41) ELS62-BR GSM/GPRS/EGPRS bands: 850 (BdV) / 900 (BdVIII) / 1800 (BdIII) / 1900 (BdII) LTE bands: 2100 (Bd1) / 1800 (Bd3) / 850 (Bd5) / 2600 (Bd7) / 900 (Bd8) / 700 (Bd28) ELS62-C GSM/GPRS/EGPRS bands: 900 (BdVIII) / 1800 (BdIII) LTE bands: 2100 (Bd1) / 1800 (Bd3) / 850 (Bd5) / 900 (Bd8) / TDD2000 (Bd34) / TDD2600 (Bd38) / TDD1900 (Bd39) / TDD2300 (Bd40) / TDD2500 (Bd41)
Output power (according to Release 99)	Class 4 for 850 (BdV) / 900 (BdVIII) GMSK Class 1 for 1800 (BdIII) / 1900 (BdII) GMSK Class E2 for 850 (BdV) / 900 (BdVIII) 8-PSK Class E2 for 1800 (BdIII) / 1900 (BdII) 8-PSK

Table 2: **Key Features**

Feature	Implementation
Output power (according to Release 99)	Class 3 for LTE 2100, LTE FDD Bd1 Class 3 for LTE 1900, LTE FDD Bd2 Class 3 for LTE 1800, LTE FDD Bd3 Class 3 for LTE 2100, LTE FDD Bd4 Class 3 for LTE 850, LTE FDD Bd5 Class 3 for LTE 2600, LTE FDD Bd7 Class 3 for LTE 900, LTE FDD Bd8 Class 3 for LTE 800, LTE FDD Bd20 Class 3 for LTE 700, LTE FDD Bd28 Class 3 for LTE 2000, LTE TDD Bd34 Class 3 for LTE 2600, LTE TDD Bd38 Class 3 for LTE 1900, LTE TDD Bd39 Class 3 for LTE 2300, LTE TDD Bd40 Class 3 for LTE 2500, LTE TDD Bd41 Class 3 for LTE 2100, LTE FDD Bd66
Power supply (see Section 3.1.2 and Section 4.4)	Normal operation: 3.2V to 4.5V Extended operation: 3.0V to 3.2V Typical value is 3.8V
Operating temperature (board temperature) (See Section 4.5)[2]	Normal operation: -20°C to +85°C Extended operation: -20°C to +90°C
Physical (See Section 5.1)	Dimensions: 27.6mm x 25.4mm x 2.25mm (Typical) Weight: approx. 3.3g
RoHS	All hardware components fully compliant with EU RoHS Directive
LTE features	
3GPP Release 13	UE Cat.1bis supported DL 10Mbps, UL 5Mbps
GSM/GPRS/EGPRS features	
Data transfer	GPRS: Multislot Class 12 PBCCH support Mobile Station Class B Coding Scheme 1–4 EGPRS: Multislot Class 12 PBCCH support Mobile Station Class B Downlink coding schemes - MCS 1–9 Uplink coding schemes - MCS 1–9
SMS	Point-to-point MT and MO Cell broadcast Text and PDU mode Storage: SIM card plus SMS locations in mobile equipment

Table 2: Key Features

Feature	Implementation
Software	
AT commands	Hayes 3GPP TS 27.007, TS 27.005, Telit Cinterion Cinterion® AT commands for compatibility
SIM Application Toolkit	SAT letter classes b, c, e; with BIP
Audio	Support for Voice over LTE (VoLTE), i.e. Voice Service via IMS (IP-based Multimedia Subsystem) and CSFB.
Firmware update	Generic update from host application over ASC0 or USB modem.
Interfaces	
Module interface	Surface mount device with solderable connection pads (SMT application interface). Land grid array (LGA) technology ensures high solder joint reliability and allows the use of an optional module mounting socket. For more information on how to integrate SMT modules, see also [5]. This application note comprises chapters on module mounting and application layout issues as well as on additional SMT application development equipment.
USB (see Section 3.1.3)	USB 2.0 High Speed (480Mbit/s) device interface, Full Speed (12Mbit/s) compliant.
2 serial interfaces (see Section 3.1.4 and Section 3.1.5)	ASC0 (shared with GPIO lines): 8-wire modem interface with status and control lines, unbalanced, asynchronous Auto baud rates: 1200bps to 230,400bps (excluding 2400bps) Adjustable baud rates: 300bps to 921,600bps Supports RTS0/CTS0 hardware flow control. Supports 0xON/0xOFF software flow control. ASC1 (shared with GPIO lines): 4-wire, unbalanced asynchronous interface Auto baud rates: 1200bps to 230,400bps (excluding 2400bps) Adjustable baud rates: 300bps to 921,600bps Supports RTS1/CTS1 hardware flow control
2 UICC interfaces (see Section 3.1.6)	2 UICC interfaces (switchable) Support SIM/USIM cards: 3V, 1.8V
Audio (see Section 3.1.7 and Section 3.1.8)	1 digital audio interface (DAI), shared with GPIO lines 1 analog audio interface (AAI)

Table 2: Key Features

Feature	Implementation
GPIO interface (see Section 3.1.9)	19 GPIO lines comprising: 4 GPIO lines shared with ASC0 interface 4 GPIO lines shared with ASC1 interface 5 GPIO lines shared with DAI interface 1 GPIO line shared with network status indication (LED) 1 GPIO line shared with SIM switch 4 GPIO lines not shared
Status (see Section 3.1.10.1)	Support status indication LED.
Fast shutdown (see Section 3.1.10.4)	Support fast shutdown interrupt signal.
Antenna tuner	Tuner0 and Tuner1 for antenna tuner control.
Antenna interface pads (see Section 3.2)	50Ω. GSM/LTE antenna.
Power on/off, Reset	
Power on/off	Switch on by hardware signal ON Switch off by AT command Switch off by hardware signal FST_SHDN instead of AT command Automatic switch-off in case of critical temperature or voltage conditions
Reset	Orderly shutdown and reset by AT command Emergency reset by hardware signal EMERG_RST
Evaluation kit (For ordering information see Section 8.1)	
Evaluation module	ELS62 module soldered onto a dedicated PCB that can be connected to an adapter in order to be mounted onto the DSB75 or DSB-Mini.
EVAL DSB Adapter	EVAL DSB Adapter for mounting the ELS62 evaluation module to the DSB75 or DSB-Mini. See also [9].
DSB75	DSB75 Development Support Board designed to test and type approve Telit Cinterion modules and provide a sample configuration for application engineering. A special adapter is required to connect the ELS62 evaluation module to the DSB75. See also [10].
DSB-Mini	DSB-mini Development Support Board designed to test Telit Cinterion modules. It is the cost optimized development board alternative to DSB75. A special adapter is required to connect the ELS62 evaluation module to the DSB-Mini. See also [11].

Table 2: **Key Features**

Feature	Implementation
LGA DevKit	LGA DevKit is designed as a generic development adapter for LGA modules. With the LGA DevKit, it is no longer necessary to connect the evaluation modules to an adapter for test and development purposes. LGA DevKit may operate stand-alone without the need of any further tools or devices, or it can be operated with a port extender, for instance DSB75 or DSB-Mini, as an adapter between the module and further external applications. See also [7] and [8].

1. Frequency range of Band 41 is 2535-2675MHz
2. The board temperature is corresponding to the measured chipset temperature.

2.8 ELS62 System Overview

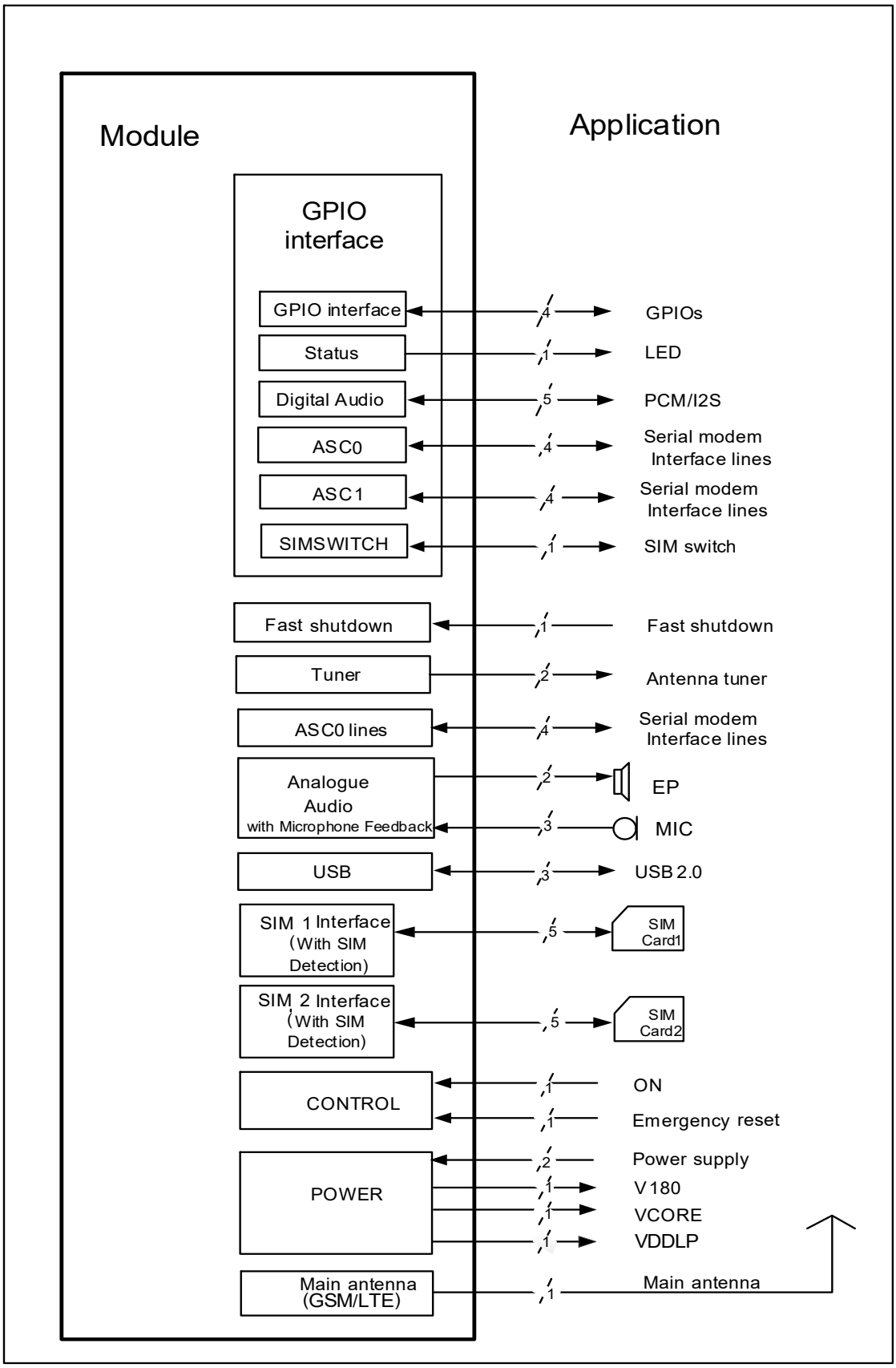

Figure 1: ELS62 system overview

2.9 Circuit Concept

Figure 2 and Figure 3 show block diagrams of the ELS62 module and illustrate the major functional components:

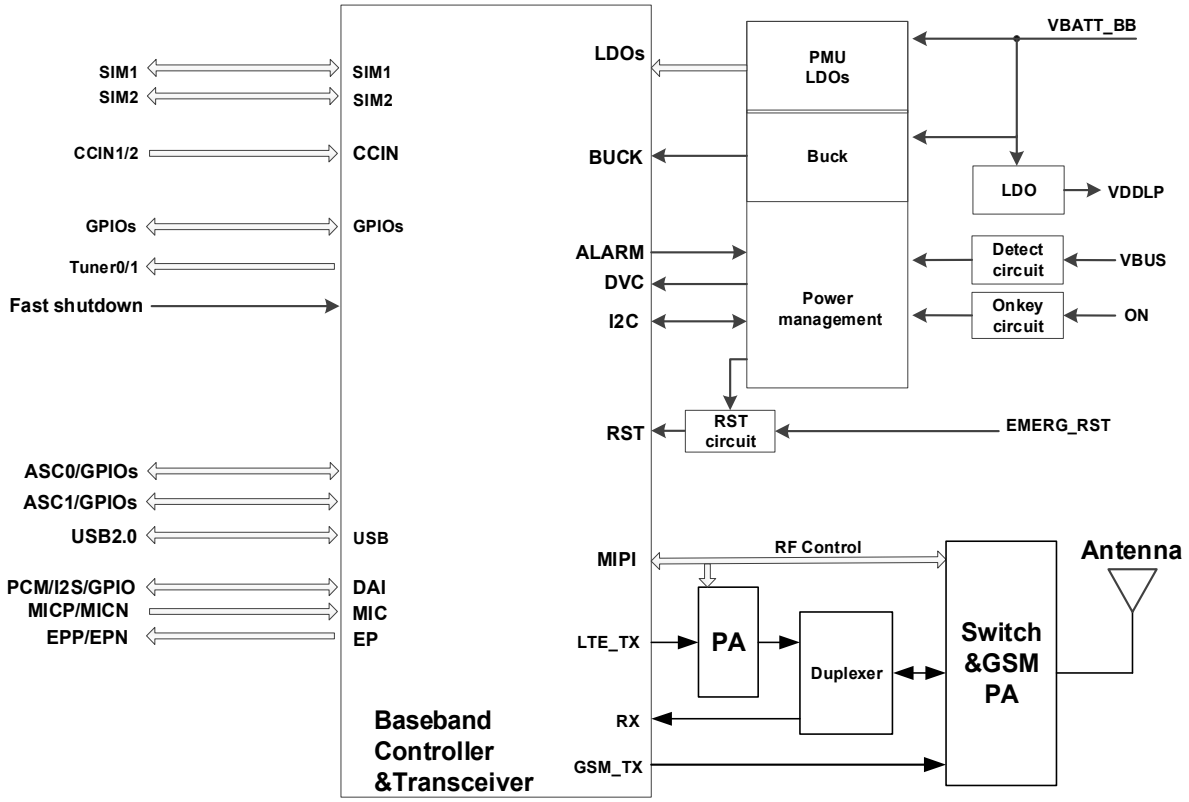

Figure 2: ELS62 block diagram

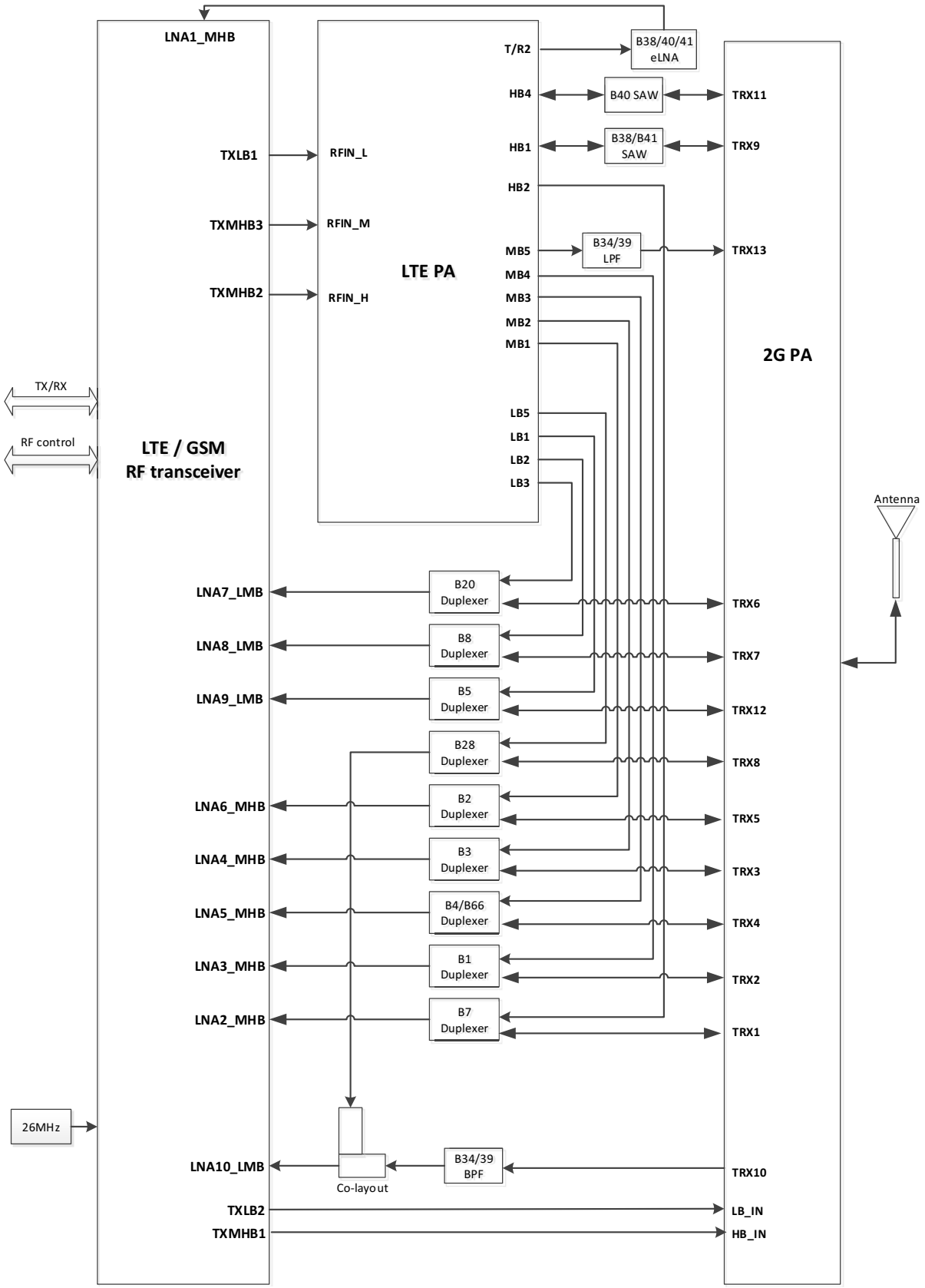

Figure 3: ELS62 RF section block diagram

3 Interface Characteristics

ELS62 is equipped with an SMT application interface that connects to the external application. The SMT application interface incorporates the various application interfaces as well as the RF antenna interface.

3.1 Application Interface

3.1.1 Pad Assignment

The SMT application interface on the ELS62 provides connecting pads to integrate the module into external applications. Figure 4 (bottom view) and Figure 5 (top view) show the connecting pads' numbering plan, the following Table 3 lists the pads' assignments.

Signal pads that are not used, i.e., marked as "rfu" (reserved for future use) or "nc" (not connected), need to be soldered, but should not have an electrical connection to the external application or GND. Also, pads marked as "rfu" are further qualified as "dnu" (do not use), indicating that they are not used at all.

Note: Telit Cinterion strongly recommends to provide test points for certain signal lines to and from the module while developing SMT applications – for debug, test and/or trace purposes during the manufacturing process. In this way it is possible to detect soldering (and other) problems. Please refer to [5] for more information on test points and how to implement them. The signal lines for which test points should be provided for are marked as "Test point recommended" in Table 4.

Table 3: **Pad assignments**

Pad no.	Signal name	Pad no.	Signal name	Pad no.	Signal name
201	EPN	24	GPIO22/FSC	235	USB_DN
202	EPP	25	GPIO21/DIN	236	nc
203	GND	26	GPIO23/BCLK	237	nc
204	$BATT+_{BB}$	27	rfu (dnu)	238	GND
205	GND	28	rfu (dnu)	239	GPIO5/LED
206	rfu (dnu)	29	GPIO17/TXD1	240	GPIO6
207	ON	30	GPIO16/RXD1	241	GPIO7
208	GND	31	GPIO18/RTS1	242	GPIO8/SIMSWITCH
209	V180	32	GPIO19/CTS1	53	$BATT+_{RF}$
210	RXD0	33	EMERG_RST	54	GND
211	CTS0	221	GPIO12	55	GND
212	TXD0	222	GPIO11	56	nc
213	GPIO24/RING0	223	GND	57	GND
214	RTS0	224	rfu (dnu)	58	GND
215	VDDLP	225	GND	59	ANT_MAIN
216	CCRST1	226	nc	60	GND
217	CCIN1	227	GND	61	GND
218	CCIO1	228	nc	62	GND
219	rfu (dnu)	229	FST_SHDN	63	GND
220	GPIO13/MCLK	230	GPIO3/DSR0	64	AGND
20	CCVCC1	231	GPIO2/DCD0	65	MICP
21	CCCLK1	232	GPIO1/DTR0	66	MICN
22	VCORE	233	VUSB	243	VMIC
23	GPIO20/DOUT	234	USB_DP	244	rfu (dnu)
Centrally located pads					
67	rfu (dnu)	83	GND	99	GND
68	rfu (dnu)	84	GND	100	GND
69	rfu (dnu)	85	GND	101	GND
70	rfu (dnu)	86	GND	102	GND
71	nc	87	nc	103	GND
72	nc	88	GND	104	Tuner0
73	nc	89	GND	105	Tuner1
74	rfu (dnu)	90	GND	106	CCIN2

Table 3: **Pad assignments**

Pad no.	Signal name	Pad no.	Signal name	Pad no.	Signal name
75	rfu (dnu)	91	nc	245	GND
76	rfu (dnu)	92	GND	246	CCVCC2
77	rfu (dnu)	93	GND	247	CCCLK2
78	rfu (dnu)	94	GND	248	CCIO2
79	nc	95	GND	249	CCRST2
80	rfu (dnu)	96	GND	250	GND
81	GND	97	GND	251	GND
82	GND	98	GND	252	GND

Signal pads that are not used should not be connected to an external application.

Please note that the reference voltages listed in Table 4 are the values measured directly on the ELS62 module. They do not apply to the accessories connected.

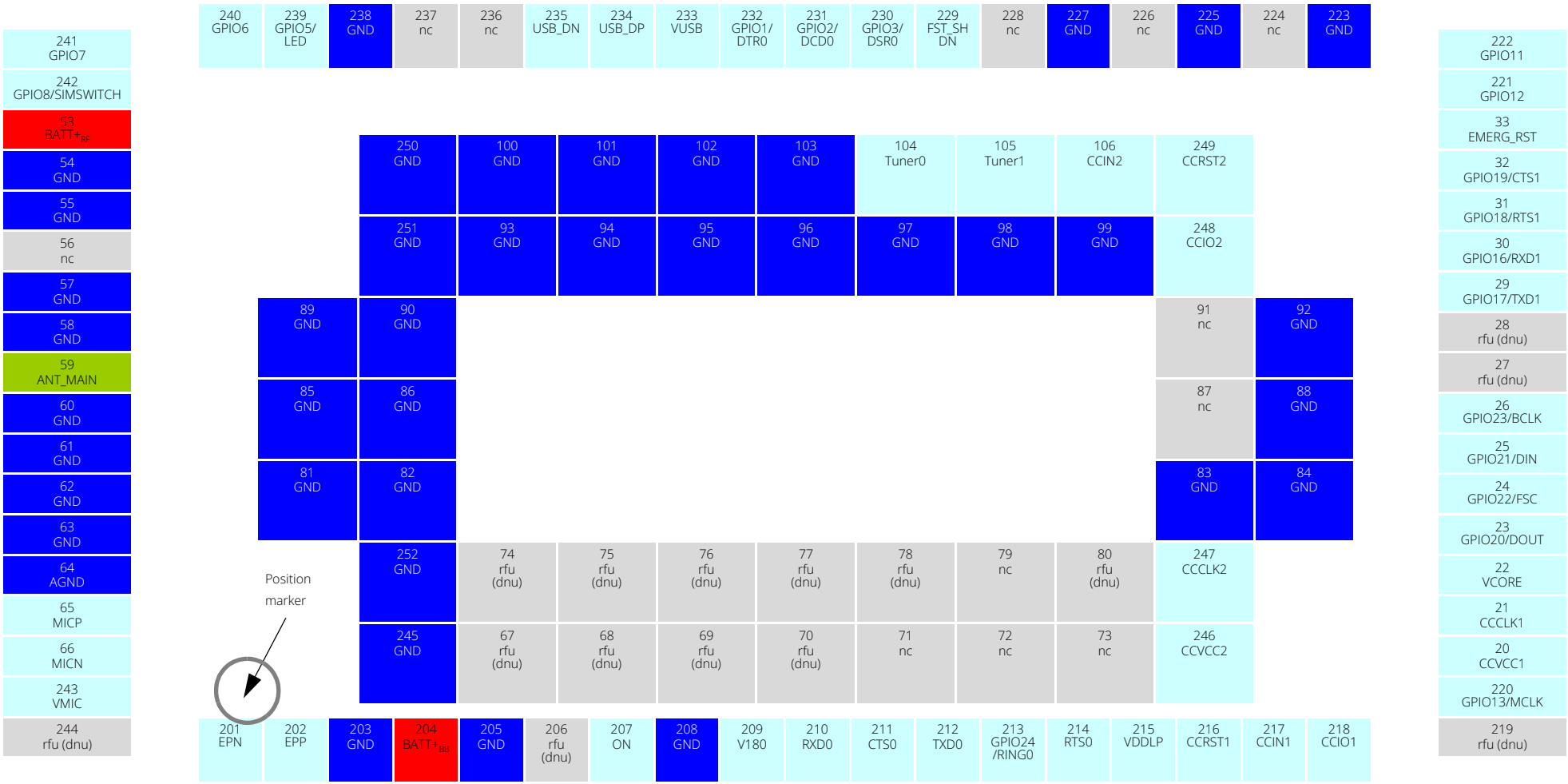

Figure 4: ELS62 bottom view: Pad assignments

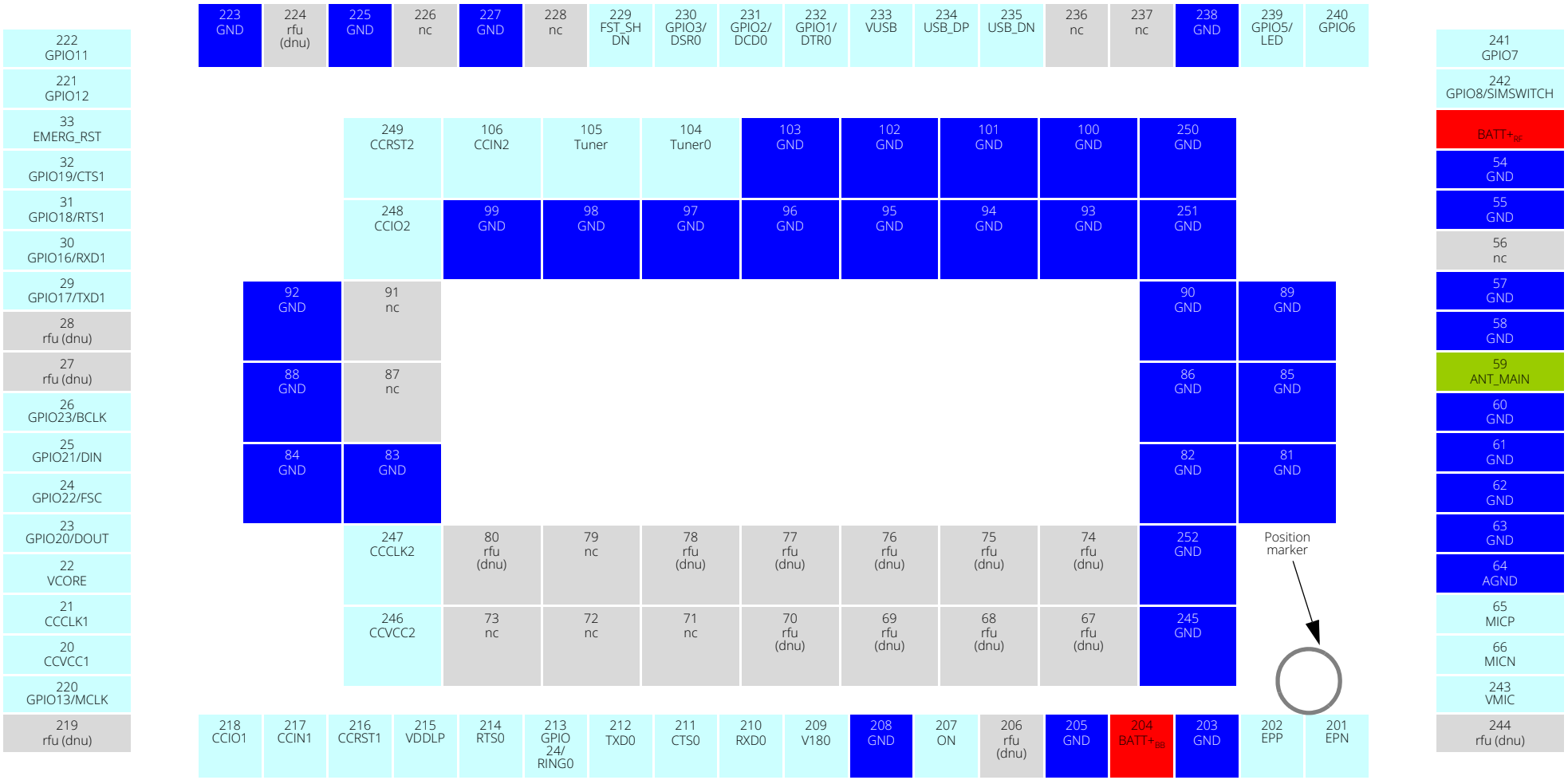

Figure 5: ELS62 top view: Pad assignments

3.1.2 Signal Properties

Table 4: **Signal properties**

Function	Signal name	IO	Signal form and level	Comment
Power supply	$BATT+_{BB}$ $BATT+_{RF}$	I	GSM and LTE $V_I$max = 4.5V $V_I$min = 3.0V during Tx burst on board GSM during Tx burst ___|-----|_____|-----|___ n Tx = n x 577µs peak current every 4.616ms	Lines of BATT+ and GND must be connected in parallel for supply purposes because higher peak currents may occur. Minimum voltage must not fall below 3.0 V including drop, ripple, spikes and not rise above 4.5V.
Power supply	GND		Ground	Application Ground
External supply voltage	V180	O	Normal operation: $V_O$norm = 1.80V ±3% $I_O$max = -10mA SLEEP mode Operation: V_OSleep = 1.80V ±5% $I_O$max = -10mA $C_L$max = 100nF	V180 should be used to supply level shifters at the interfaces or to supply external application circuits. VCORE and V180 may be used for the power indication circuit. Test point recommended.
	VCORE	O	$V_O$norm = 1.2V ±2.5% $I_O$max = -10mA SLEEP mode Operation: V_OSleep = 0.90V...1.2V ±4% $I_O$max = -10mA $C_L$max = 100nF	
	VDDLP	O	$V_O$norm=1.8V ±5% $I_O$max = -20mA $V_I$max =1.9V $V_I$min = 1.0V in power down mode	It is used for automatic power on circuit (see Section 4.2.1.3). It cannot power RTC when the module is power off. If unused keep line open. Test point recommended.

Table 4: Signal properties

Function	Signal name	IO	Signal form and level	Comment
Ignition	ON[1]	I	V_{IH}max = 5V tolerant V_{IH}min = 1.3V V_{IL}max = 0.5V High level pulse width >15ms ON ___|------	This signal switches the module on, and is rising edge sensitive triggered. Test point recommended.
Emergency reset	EMERG_RST	I	R_I ≈ 10kΩ, $C_{internal}$ ≈ 0.1µF V_{OH}max = V180 max V_{IH}min = 1.35V V_{IL}max = 0.3V at ~100µA -----|___|----- low impulse width > 10ms	This line must be driven low by an open drain or open collector driver connected to GND. If unused keep line open. Test point recommended.
Fast shutdown	FST_SHDN[1]	I	V_{IL}max = 0.35V V_{IH}min = 1.30V V_{IH}max = 1.85V On Chip pull up resistor to 1.8V Rpumin = 55k Rputyp = 79k Rpumax = 121k -----|___|----- low impulse width > 1.5ms	This line must be driven low by an open drain or open collector driver connected to GND. If unused keep line open. Test point recommended
USB	VUSB	I	$V_I$min = 3.5V $V_I$max = 5.15V Active and suspend current: I_{max} < 100µA	All electrical characteristics according to USB Implementers' Forum, USB 2.0 Specification. If unused keep lines open. Test point recommended.
	USB_DN USB_DP	I/O	Full and high speed signal characteristics according USB 2.0 Specification.	

Table 4: Signal properties

Function	Signal name	IO	Signal form and level	Comment
Serial interface ASC0	RXD0	O	V_{OL}max = 0.25V at I = 1mA V_{OH}min = 1.55V at I = -1mA V_{OH}max = 1.85V	If unused keep lines open. Note that some ASC0 lines are originally available as GPIO lines. If configured as ASC0 lines, the GPIO lines are assigned as follows: GPIO1 --> DTR0 GPIO2 --> DCD0 GPIO3 --> DSR0 GPIO24 --> RING0 Test point recommended.
	CTS0	O		
	DSR0	O		
	DCD0	O		
	RING0	O		
	TXD0	I	V_{IL}max = 0.35V V_{IH}min = 1.30V V_{IH}max = 1.85V	
	RTS0	I		
	DTR0	I		
Serial interface ASC1	RXD1	O	V_{OL}max = 0.25V at I = 1mA V_{OH}min = 1.55V at I = -1mA V_{OH}max = 1.85V V_{IL}max = 0.35V V_{IH}min = 1.30V V_{IH}max = 1.85V	If unused keep line open. Note that the ASC1 interface lines are originally available as GPIO lines. If configured as ASC1 lines, the GPIO lines are assigned as follows: GPIO16 --> RXD1 GPIO17 --> TXD1 GPIO18 --> RTS1 GPIO19 --> CTS1 Test point recommended.
	TXD1	I		
	RTS1	I		
	CTS1	O		
SIM card detection	CCIN1 CCIN2	I	V_{IH}min = 1.30V V_{IH}max= 1.85V V_{IL}max = 0.35V	CCIN = High, SIM card inserted. If unused keep line open.

Table 4: **Signal properties**

Function	Signal name	IO	Signal form and level	Comment
3V SIM card interface	CCRST1 CCRST2	O	V_{OL}max = 0.45V at I = 1mA V_{OH}min = 2.35V at I = -1mA V_{OH}max = 3.10V	Maximum cable length or copper track to SIM card holder should not exceed 100mm.
	CCIO1 CCIO2	I/ O	V_{IL}max = 0.75V V_{IH}min = 2.05V V_{IH}max = 3.10V V_{OL}max = 0.45V at I = 1mA V_{OH}min = 2.35V at I = -1mA V_{OH}max = 3.10V	
	CCCLK1 CCCLK2	O	V_{OL}max = 0.45V at I = 1mA V_{OH}min = 2.35V at I = -1mA V_{OH}max = 3.10V	
	CCVCC1 CCVCC2	O	$V_O$min= 2.85V $V_O$typ = 3.0V $V_O$max = 3.15V $I_O$max = -30mA	
1.8V SIM card interface	CCRST1 CCRST2	O	V_{OL}max = 0.35V V_{OH}min = 1.25V V_{OH}max = 1.85V	Maximum cable length or copper track to SIM card holder should not exceed 100mm.
	CCIO1 CCIO2	I/ O	V_{IL}max = 0.25V V_{IH}min = 1.50V V_{IH}max = 1.85V	
	CCCLK1 CCCLK2	O	V_{IL}max = 0.35 V_{IH}min = 1.25V V_{IH}max = 1.85V V_{OL}max = 0.25V at I = 1mA V_{OH}min = 1.50V at I = -1mA V_{OH}max = 1.85V	
	CCVCC1 CCVCC2	O	$V_O$min = 1.7V $V_O$typ = 1.8V $V_O$max = 1.9V $I_O$max = -30mA	

Table 4: **Signal properties**

Function	Signal name	IO	Signal form and level	Comment
GPIO interface	GPIO1 - GPIO3, GPIO5 - GPIO8, GPIO11 - GPIO13, GPIO16 - GPIO24	I/O	V_{OL}max = 0.25V V_{OH}min = 1.55V V_{OH}max = 1.85V V_{IL}max = 0.35V V_{IH}min = 1.30V V_{IH}max = 1.85V Imax = ±5mA	If unused keep line open. Please note that most GPIO lines can be configured by AT command for alternative functions: GPIO1 - GPIO3: ASC0 control lines DTR0, DCD0, and DSR0 GPIO5: Status LED line GPIO8: SIM Switch GPIO13: MCLK GPIO16 - GPIO19: ASC1 control lines RXD1, TXD1, RTS1, and CTS1 GPIO20 - GPIO23: DAI control lines (excluding MCLK) GPIO24: ASC0 control line RING0
Status LED	LED	O	V_{OL}max = 0.25V at I = 1mA V_{OH}min = 1.55V at I = -1mA V_{OH}max = 1.85V	If unused keep line open. Note that the LED line is originally available as GPIO line. If configured as LED line, the GPIO line is assigned as follows: GPIO5 --> LED

Table 4: **Signal properties**

Function	Signal name	IO	Signal form and level	Comment
Digital audio interface (DAI)	BCLK	O	V_{OL}max = 0.25V at I=1mA V_{OH}min = 1.55V at I=-1mA V_{OH}max = 1.85V	If unused keep line open. Note that the DAI interface lines are originally available as GPIO lines. If configured as DAI lines, the GPIO lines are assigned as follows: GPIO22 --> FSC GPIO23 --> BCLK GPIO20 --> DOUT GPIO21 --> DIN GPIO13 --> MCLK (Master clock out for external codecs)
	FSC	O		
	DOUT	O		
	DIN	I	V_{IL}max = 0.35V V_{IH}min = 1.30V V_{IH}max = 1.85V	
	MCLK	O	V_{OL}max = 0.25V at I=1mA V_{OH}min = 1.55V at I=-1mA V_{OH}max = 1.85V Fre=12.288MHz	
Analogue audio interface	VMIC	O	$V_O$typ = 1.8V ±5% $I_o$max = -2mA	Microphone supply for customer feeding circuits. If unused keep pin open.
	EPN EPP	O	Differential, max.37mW at 32 load C_{LOAD}<=400pF to AGND at each pin	Balanced output for earpiece or balanced output for line out. If unused keep pin open.
	MICP MICN	I	Rimin = 5K Rimax = 10K $V_I$max= 1.4 Vpp	Balanced differential microphone with external feeding circuit (using VMIC and AGND) or balanced differential line input. Use coupling capacitors. If unused keep pins open.
	AGND		Analog ground	GND level for external audio circuits.

Table 4: Signal properties

Function	Signal name	IO	Signal form and level	Comment
Antenna Tuner	Tuner0, Tuner1	O	V_{OL}max = 0.25V V_{OH}min = 1.55V V_{OH}max = 1.85V	If unused keep line open.

1. Telit Cinterion strongly recommends to provide test points for certain signal lines to and from the module while developing SMT application (for debug, test and/or trace purposes during the manufacturing process). In this way it is possible to detect soldering (and other) problems. The signal lines for which test points should be provided for are marked as "Test point recommended" in the above table.

3.1.2.1 Absolute Maximum Ratings

The absolute maximum ratings stated in Table 5 are stress ratings under any conditions. Stresses beyond any of these limits will cause permanent damage to ELS62.

Table 5: Absolute maximum ratings[1]

Parameter	Min	Max	Unit
Supply voltage $BATT+_{BB}$, $BATT+_{RF}$	-0.3	+5.5	V
Voltage at all signal lines in Power Down mode	-0.3	+0.3	V
Voltage at digital lines 1.8V in normal operation	-0.2	V180 + 0.2	V
Current at digital lines in normal operation	-	+2	mA
Voltage at SIM interface, CCVCC 1.8V in normal operation	-0.3	+2	V
Voltage at SIM interface, CCVCC 3V in normal operation	-0.3	+3.3	V
Current at SIM interface in 1.8V and 3V operation	-	+50	mA
V180 in normal operation	+1.7	+1.9	V
Current at V180 in normal operation	-	+50	mA
VCORE in normal operation	+0.8	+1.32	V
Current at VCORE in normal operation	-	+50	mA
VDDLP in normal operation	-0.15	+2	V
Current at VDDLP in normal operation	-	+50	mA

1. Positive noted current means current sourcing from ELS62. Negative noted current means current sourcing towards ELS62.

3.1.3 USB Interface

ELS62 supports a USB 2.0 High Speed (480Mbit/s) device interface that is Full Speed (12Mbit/s) compliant. The USB interface is primarily intended for use as command and data interface and for downloading firmware.

The external application is responsible for supplying the VUSB line. This line is used for cable detection only. The USB part (driver and transceiver) is supplied by means of BATT+. This is because ELS62 is designed as a self-powered device compliant with the "Universal Serial Bus Specification Revision 2.0"[2].

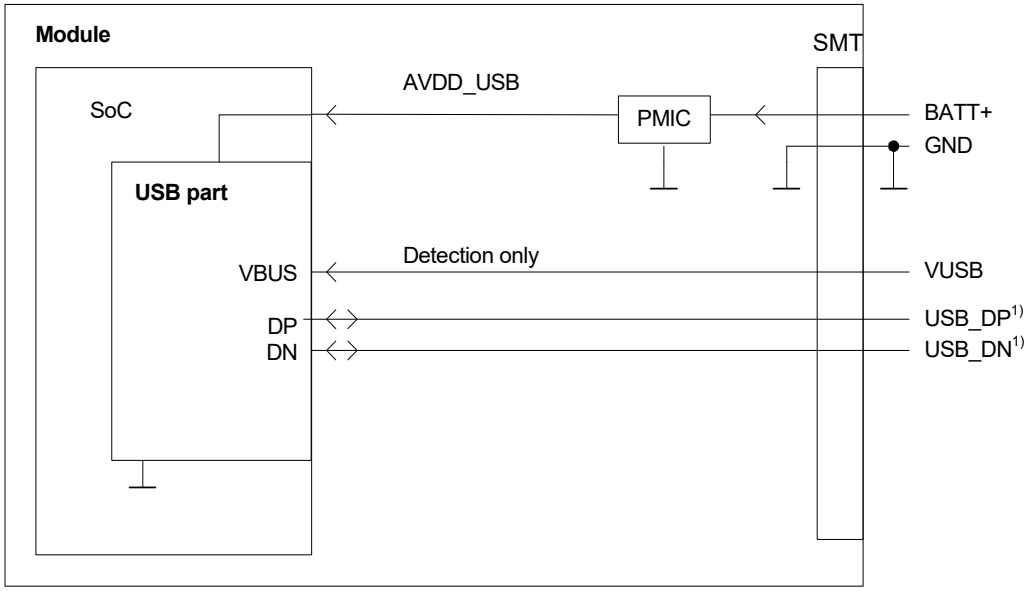

1) If the USB interface is operated in High Speed mode (480Mbit/s), it is recommended to take special care routing the data lines USB_DP and USB_DN. Application layout should in this case implement a differential impedance of 90 Ohms for proper signal integrity.

Figure 6: USB circuit

To properly connect the module's USB interface to the external application, a USB 2.0 compatible connector and cable or hardware design is required. For more information on the USB related signals see Table 4. Furthermore, the USB modem driver distributed with ELS62 needs to be installed.

2. The specification is ready for download on http://www.usb.org/developers/docs/

3.1.4 Serial Interface ASC0

ELS62 offers an 8-wire unbalanced, asynchronous modem interface ASC0 conforming to ITU-T V.24 protocol DCE signaling. The electrical characteristics do not comply with ITU-T V.28. The significant levels are 0V (for low data bit or active state) and 1.8V (for high data bit or inactive state). For electrical characteristics please refer to Table 4. For an illustration of the interface line's startup behavior see Figure 7.

ELS62 is designed for use as a DCE. Based on the conventions for DCE-DTE connections it communicates with the customer application (DTE) using the following signals:

- Port TXD @ application sends data to the module's TXD0 signal line
- Port RXD @ application receives data from the module's RXD0 signal line

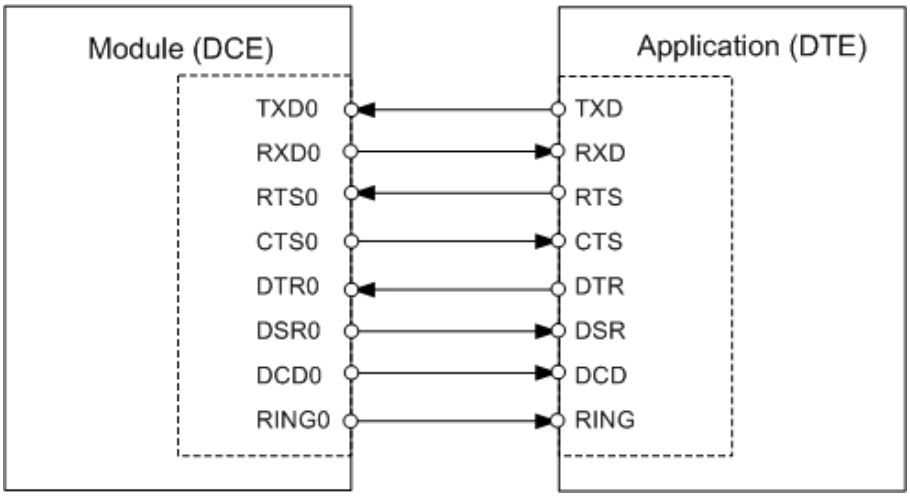

Figure 7: Serial interface ASC0

Features:

- Includes the data lines TXD0 and RXD0, the status lines RTS0 and CTS0 and, in addition, the modem control lines DTR0, DSR0, DCD0 and RING0.
- The RING0 signal serves to indicate incoming calls and other types of URCs (Unsolicited Result Code). It can also be used to send pulses to the host application, for example to wake up the application from power saving state.
- Configured for 8 data bits, no parity and 1 stop bit.
- ASC0 can be operated at fixed bit rates from 300bps up to 921,600bps.
- Autobauding supports bit rates from 1,200bps up to 230,400bps (excluding 2,400bps).
- Supports RTS0/CTS0 hardware flow control. The hardware hand shake line RTS0 has an internal pull down resistor causing a low level signal, if the line is not used and open. Although hardware flow control is recommended, this allows communication by using only RXD and TXD lines.
- Wake up from SLEEP mode by RTS0 activation (high to low transition; see Section 4.3.3).

Note 1: The ASC0 modem control lines DTR0, DCD0, DSR0 and RING0 are originally available as GPIO lines. If configured as ASC0 lines, these GPIO lines are assigned as follows:

GPIO1 --> DTR0, GPIO2 --> DCD0, GPIO3 --> DSR0 and GPIO24 --> RING0.

Note 2: It is recommended to select UART cables supported high bit rate.

The following figures shows the startup behavior of the asynchronous serial interface ASC0.

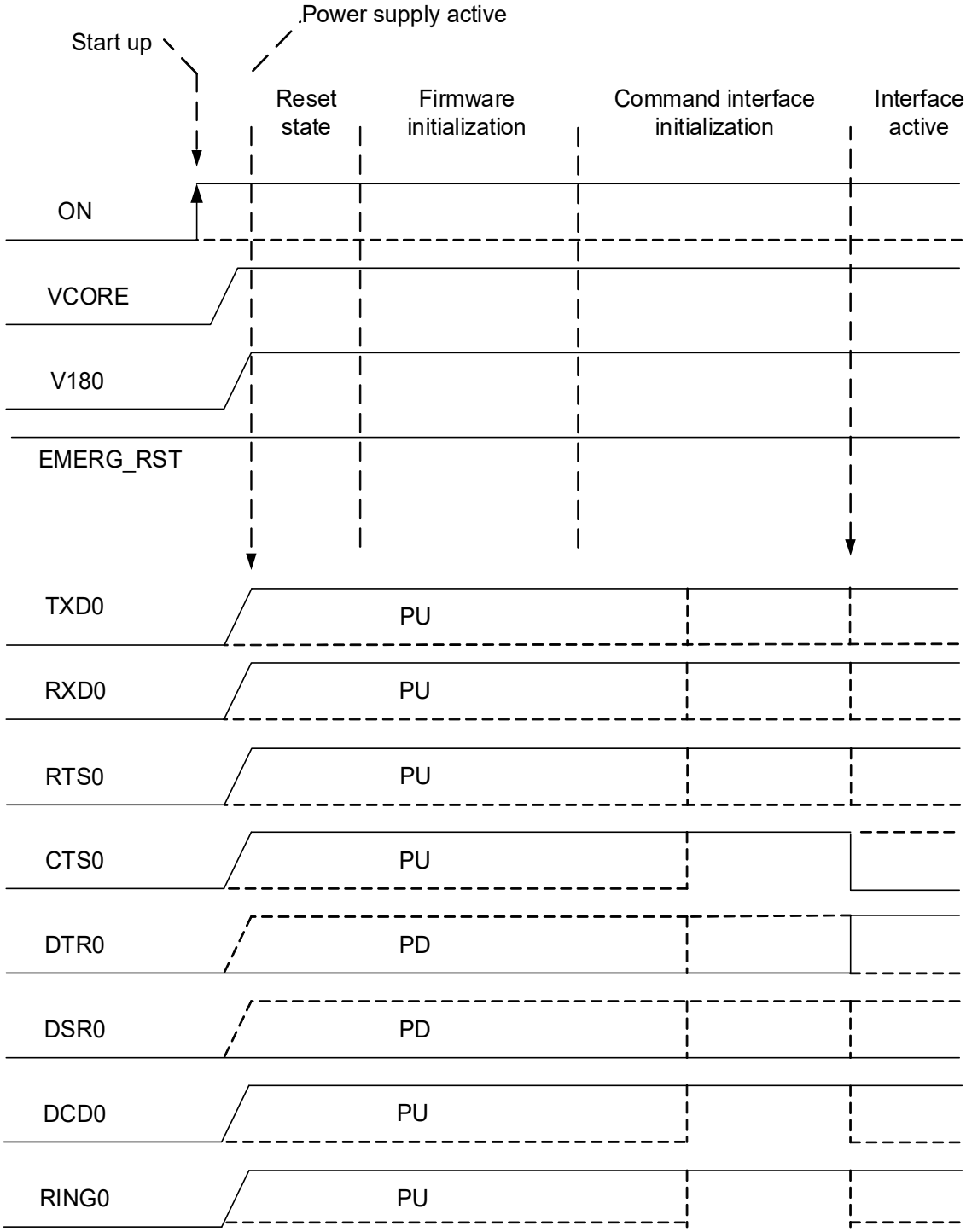

Figure 8: ASC0 startup behavior

3.1.5 Serial Interface ASC1

Four ELS62 GPIO lines can be configured as ASC1 interface signals to provide a 4-wire unbalanced, asynchronous interface ASC1 conforming to ITU-T V.24 protocol DCE signaling. The electrical characteristics do not comply with ITU-T V.28. The significant levels are 0V (for low data bit or active state) and 1.8V (for high data bit or inactive state). For electrical characteristics please refer to Table 4. For an illustration of the interface line's startup behavior see Figure 10.

The ASC1 interface lines are originally available as GPIO lines. If configured as ASC1 lines, the GPIO lines are assigned as follows: GPIO16 --> RXD1, GPIO17 --> TXD1, GPIO18 --> RTS1 and GPIO19 --> CTS1. Configuration is done by AT command (see [1]: AT^SCFG). The configuration is non-volatile and becomes active after a module restart.

ELS62 is designed for use as a DCE. Based on the conventions for DCE-DTE connections it communicates with the customer application (DTE) using the following signals:

- Port TXD @ application sends data to module's TXD1 signal line
- Port RXD @ application receives data from the module's RXD1 signal line

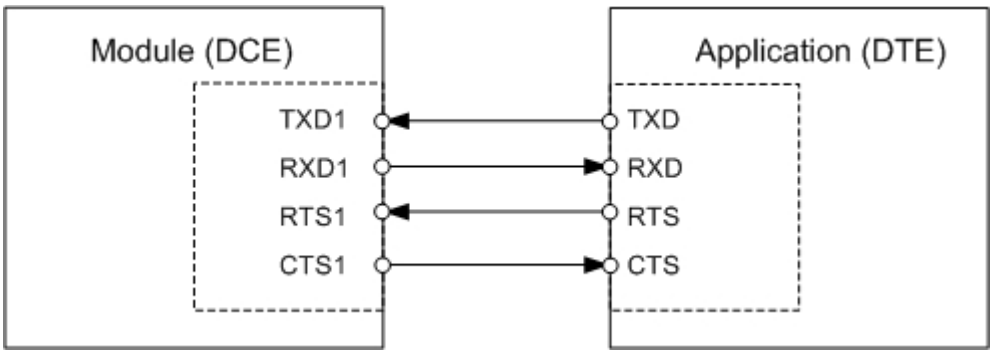

Figure 9: Serial interface ASC1

Features:

- Includes only the data lines TXD1 and RXD1 plus RTS1 and CTS1 for hardware handshake.
- On ASC1 no RING line is available.
- Configured for 8 data bits, no parity and 1 or 2 stop bits.
- ASC1 can be operated at fixed bit rates from 300bps to 921,600 bps.
- Autobauding supports bit rates from 1,200bps up to 230,400bps (excluding 2,400bps).
- Supports RTS1/CTS1 hardware flow. The hardware hand shake line RTS1 has an internal pull down resistor causing a low level signal, if the line is not used and open. Although hardware flow control is recommended, this allows communication by using only RXD and TXD lines.

Note: It is recommended to select UART cables supported high bit rate.

The following figures shows the startup behavior of the asynchronous serial interface ASC1.

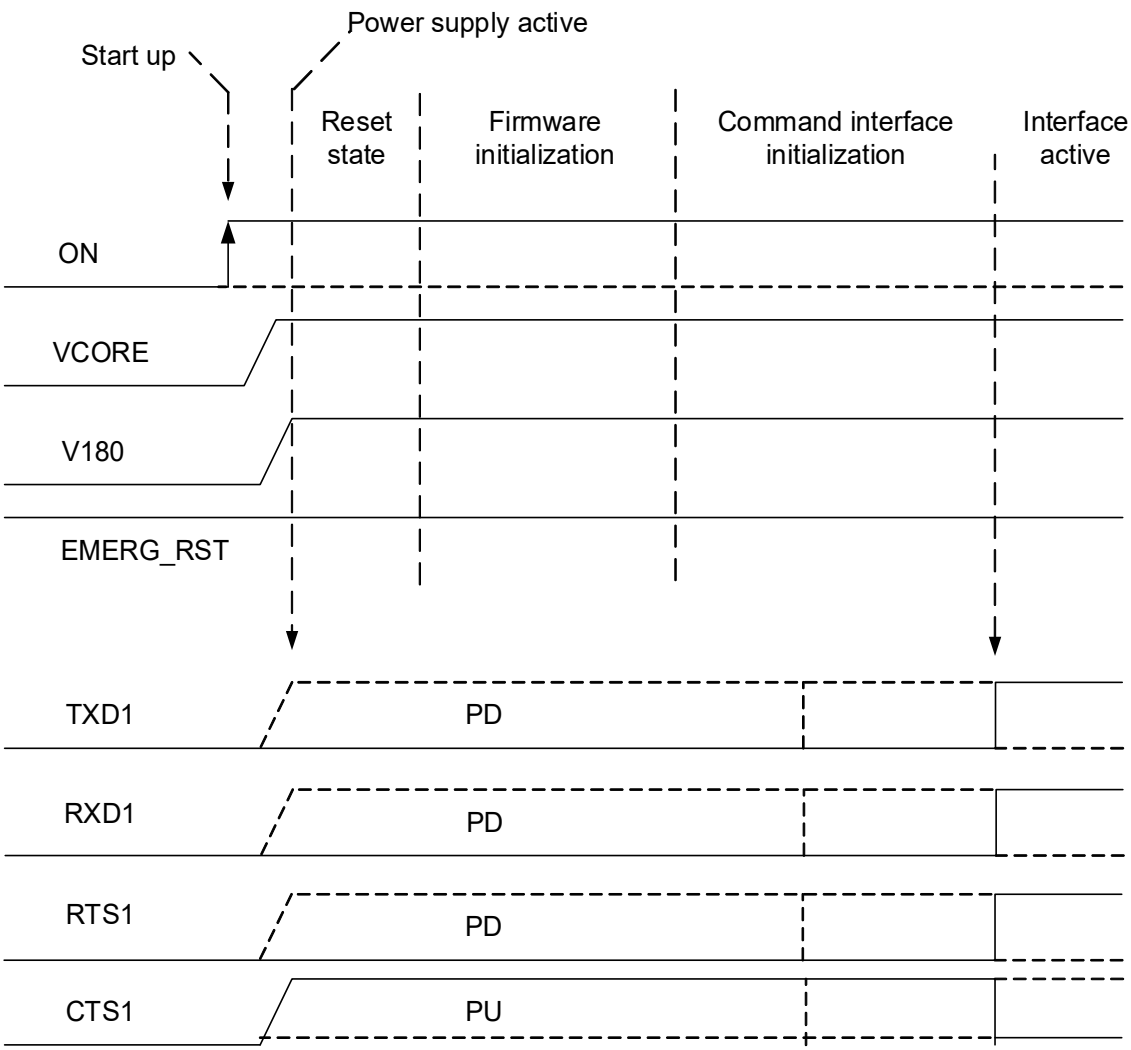

Figure 10: **ASC1 startup behavior**

3.1.6 UICC/SIM/USIM Interface

ELS62 has two UICC/SIM/USIM interfaces compatible with the 3GPP 31.102 and ETSI 102 221. These two interfaces are wired to the host interface in order to be connected to an external SIM card holder. Five pads on the SMT application interface are reserved for each of the two SIM interfaces.

The UICC/SIM/USIM interfaces support 3V and 1.8V SIM cards. Please refer to Table 4 for electrical specifications of the UICC/SIM/USIM interface lines depending on whether a 3V or 1.8V SIM card is used.

The CCINx signal serves to detect whether a tray (with SIM card) is present in the card holder. To take advantage of this feature, an appropriate SIM card detect switch is required on the card holder. For example, this is true for the model supplied by Molex, which has been tested to operate with ELS62 and is part of the Telit Cinterion reference equipment submitted for type approval. See Section 8.1 for Molex ordering numbers.

Table 6: **Signals of the SIM interface (SMT application interface)**

Signal	Description
GND	Separate ground connection for SIM card to improve EMC.
CCCLK1 CCCLK2	Chipcard clock lines for 1st and 2nd SIM interfaces.
CCVCC1 CCVCC2	SIM supply voltage lines for 1st and 2nd SIM interfaces.
CCIO1 CCIO2	Serial data line for 1st and 2nd SIM interfaces, input and output.
CCRST1 CCRST2	Chipcard reset lines for 1st and 2nd SIM interfaces.
CCIN1 CCIN2	Input on the baseband processor for detecting a SIM card tray in the holder. If the SIM is removed during operation, the SIM interface is shut down immediately to prevent destruction of the SIM. The CCINx signal is by default low and will change to high level if a SIM card is inserted. The CCINx signal is mandatory for applications that allow the user to remove the SIM card during operation. The CCINx signal is solely intended for use with a SIM card. It must not be used for any other purposes. Failure to comply with this requirement may invalidate the type approval of ELS62.

Note: No guarantee can be given, nor any liability accepted, if loss of data is encountered after removing the SIM card during operation. Also, no guarantee can be given for properly initializing any SIM card that the user inserts after having removed the SIM card during operation. In this case, the application must restart ELS62.

The figure below shows a circuit to connect an external SIM card holder.

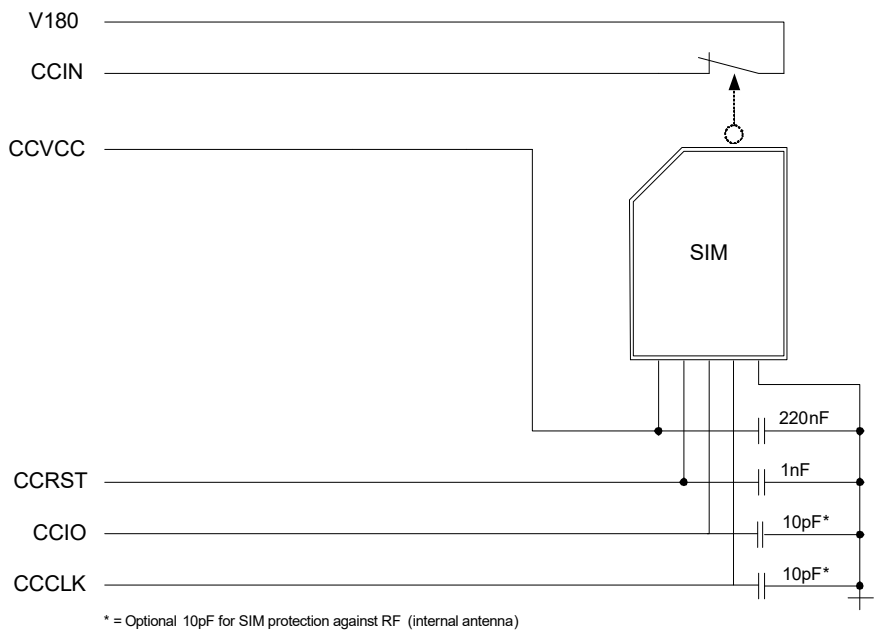

Figure 11: **External UICC/SIM/USIM card holder circuit**

The total cable length between the SMT application interface pads on ELS62 and the pads of the external SIM card holder must not exceed 100mm in order to meet the specifications of 3GPP TS 51.010-1 and to satisfy the requirements of EMC compliance.

To avoid possible cross-talk from the CCCLKx signal to the CCIOx signal, be careful that both lines are not placed next to each other. The recommended approach is to ensure that a GND line separates the CCCLKx and CCIOx lines.

An example for an optimized ESD protection for the SIM interface is shown in Section 3.1.6.1.

3.1.6.1 Enhanced ESD Protection for SIM Interface

To optimize ESD protection for the SIM interfaces, it is possible to add ESD diodes to the SIM interface lines as shown in the example given in Figure 12.[3]

The example was designed to meet ESD protection according ETSI EN 301 489-1/52: Contact discharge: ± 4kV, air discharge: ± 8kV.

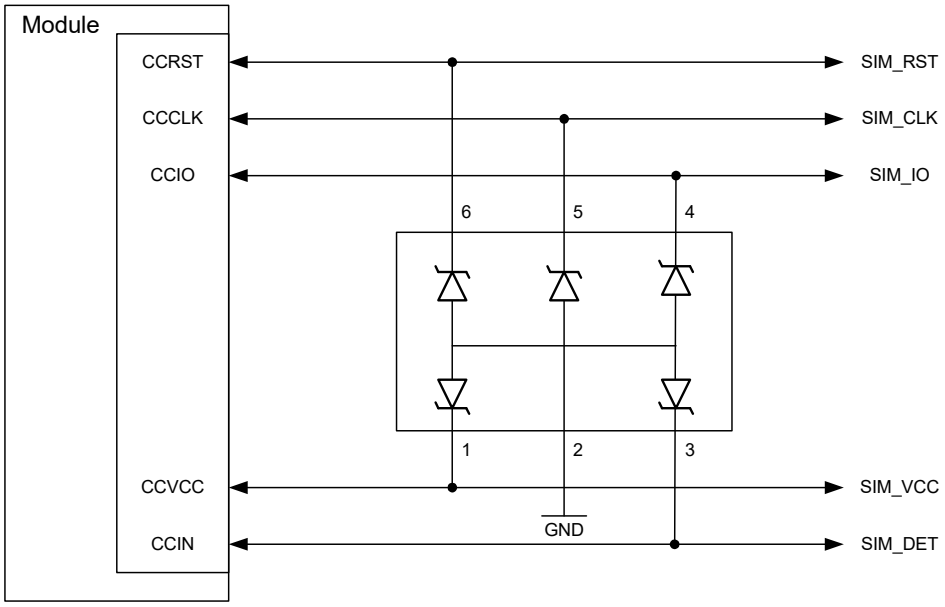

Figure 12: SIM interface - enhanced ESD protection

3. Note that the protection diode shall have low internal capacitance less than 5pF for IO and CLK.

3.1.7 Digital Audio Interface (DAI)

ELS62 supports a digital audio interface that can be employed either as pulse code modulation interface (see Section 3.1.7.1) or as inter IC sound interface (see Section 3.1.7.2).

3.1.7.1 Pulse Code Modulation Interface (PCM)

Four ELS62 GPIO lines can be configured as pule code modulation interface (PCM). The PCM functionality allows for the use of an external codec like the NAU8822A (see Section 3.1.7.3).

The PCM interface supports the following features:

- Master mode
- Long frame and short frame
- 16kHz/8kHz sample rate
- 512,1024 and 4096kHz bit clock at 16kHz sample rate
- 256kHz, 512kHz and 2048kHz bit clock at 8kHz sample rate

The four GPIO lines can be configured as DAI/PCM interface signals as follows: GPIO20 --> DOUT, GPIO21--> DIN, GPIO22 --> FSC and GPIO23 --> BCLK. The configuration is done by AT command (see [1]). It is non-volatile and becomes active after a module restart. Table 7 describes the available DAI/PCM lines at the digital audio interface. For electrical details see Section 3.1.2.

Table 7: Overview of DAI/PCM lines

Signal name	Input/Output	Description
DOUT	O	PCM data from ELS62 to external codec.
DIN	I	PCM data from external codec to ELS62.
FSC	O	Frame synchronization signal to external codec: Long frame (8kHz/16kHz)
BCLK	O	Bit clock to external codec.
MCLK	O	Optional master clock out to supply external codec. Depending on external codec.

Figure 13 and Figure 14 shows the PCM timing for the master mode available with ELS62.

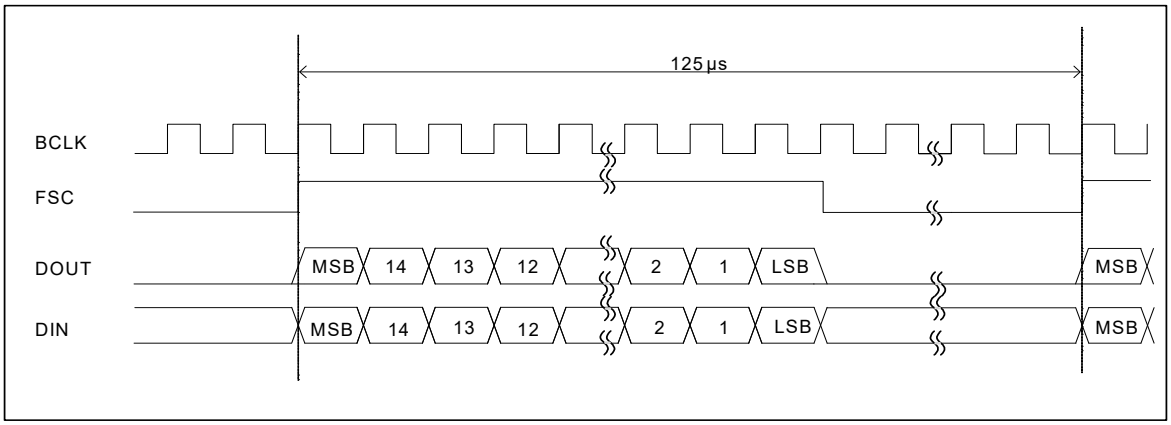

Figure 13: Long frame PCM timing, 8kHz

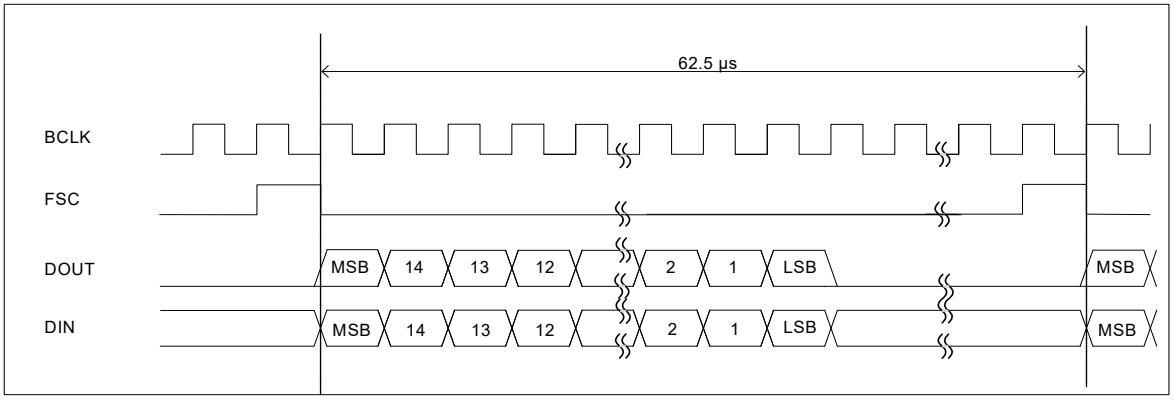

Figure 14: Short frame PCM timing, 16kHz

3.1.7.2 Inter IC Sound Interface (I^2S)

The Inter IC Sound interface (I^2S) is enabled using the AT command AT^SAIC (see [1]). An activation is possible only out of call and out of tone presentation. The I^2S properties and capabilities comply with the requirements laid out in the Phillips I^2S Bus Specifications, revised June 5, 1996.

The I^2S interface has the following characteristics:

- Clock Modes: Master with permanent clock option
- Sampling Rate: 8kHz (narrow band), 16kHz (wide band)
- Bit clock: 256kHz (sample rate: 8kHz), 512kHz (sample rate:16kHz)

The digital audio interface pads available for the PCM interface are also available for the I^2S interface. In I^2S mode they have the same electrical characteristics (for more information on the DOUT, DIN, FSC, and BCLK pads please refer to Section 3.1.2 and Section 3.1.7.1).

The table below lists the available pads at the module's digital audio interface.

Table 8: Overview of DAI/I²S lines

Signal name	Input/Output	Description
DOUT	O	I²S data from module to external codec.
DIN	I	I²S data from external codec to module.
FSC	O	Frame synchronization signal to external codec: Word alignment (WS)
BCLK	O	Bit clock to external codec: 256kHz/512kHz
MCLK	O	Optional master clock out to supply external codecs.

The following figure shows the I²S timing for the master mode available with the module.

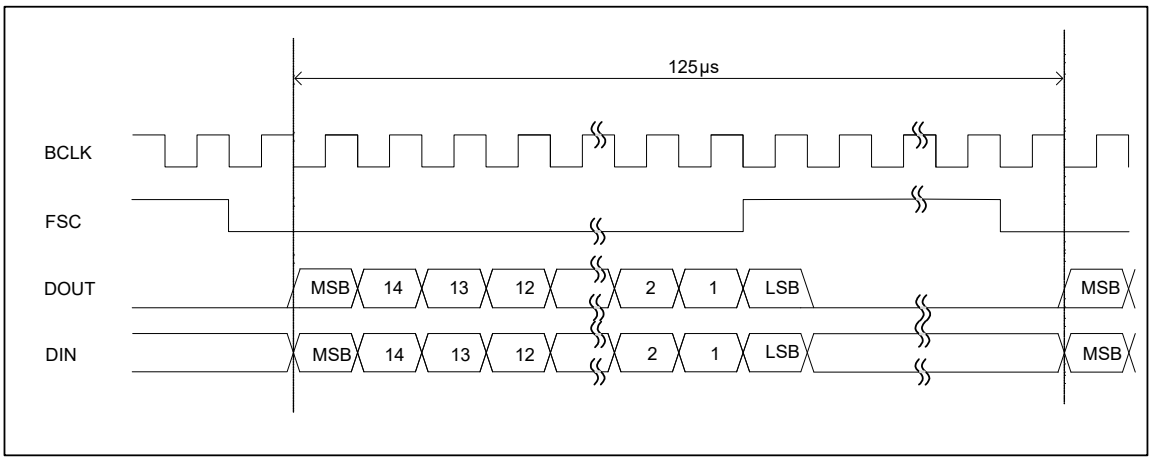

Figure 15: I²S timing, 8kHz sample rate

3.1.7.3 Solutions for the Digital Audio Interface

There is an example of using the digital audio interface of the module below.

The sample is Nuvoton codec NAU8822A which can be replaced with a DSP. Thus the slave mode codec chip runs synchronously to the network.

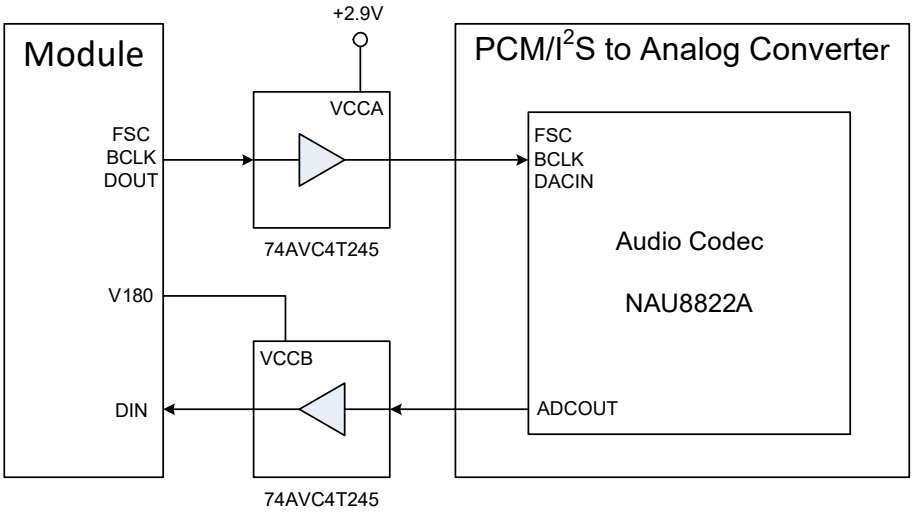

Figure 16: Block circuit connection for module's DAI interface to codec chip NAU8822A

The Nuvoton Codec NAU8822A is controlled via I²C interface. The module is set to master for the framesync and the clock.

If module works in master PCM mode, this can be done via the following AT command:

AT^SAIC=1,1,1,3,0,0,1,0,0

Correspondingly, the related codec register settings are presented below:

Table 9: Codec register settings

Register	Setting
Audio interface	NAUregister[4]=0x010
Clock Control	NAUregister[6]=0x004
Audio Sample Rate Control	NAUregister[7]=0x006

3.1.8 Analog Audio Interface

ELS62 has an analog audio interface with a balanced analog microphone input and a balanced analog earpiece output. A supply voltage and an analog ground connection are provided at dedicated pads.

3.1.8.1 Microphone Inputs and Supply

A regulated power supply for electric microphones is available at VMIC. The voltage at VMIC is rated at 1.8V max.2mA and is available while audio is active (e.g. during a call).

The following figures show possible microphone and line connections.

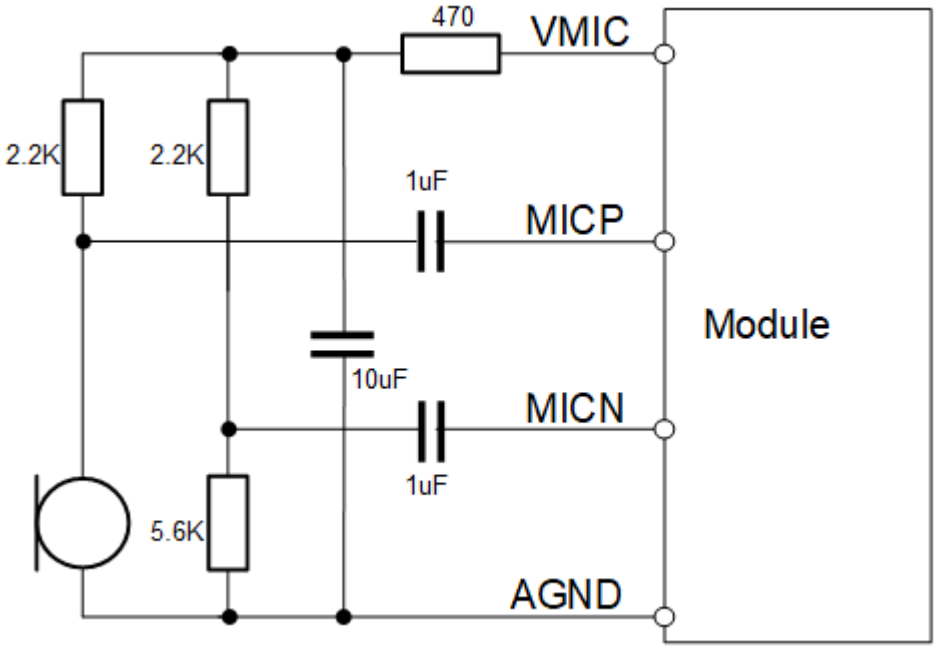

Figure 17: Single ended microphone connection

The above configuration is suitable for short connections between microphone and the module. A typical electric microphone has a metal case connected to its ground pad. Since this is routed directly to AGND, electro static discharges applied to the microphone will be

easily led away.

It is recommended to use an additional RC-filter for VMIC (for example 470 Ohm and 10µF as shown in Figure 17) if a high microphone gain is necessary.

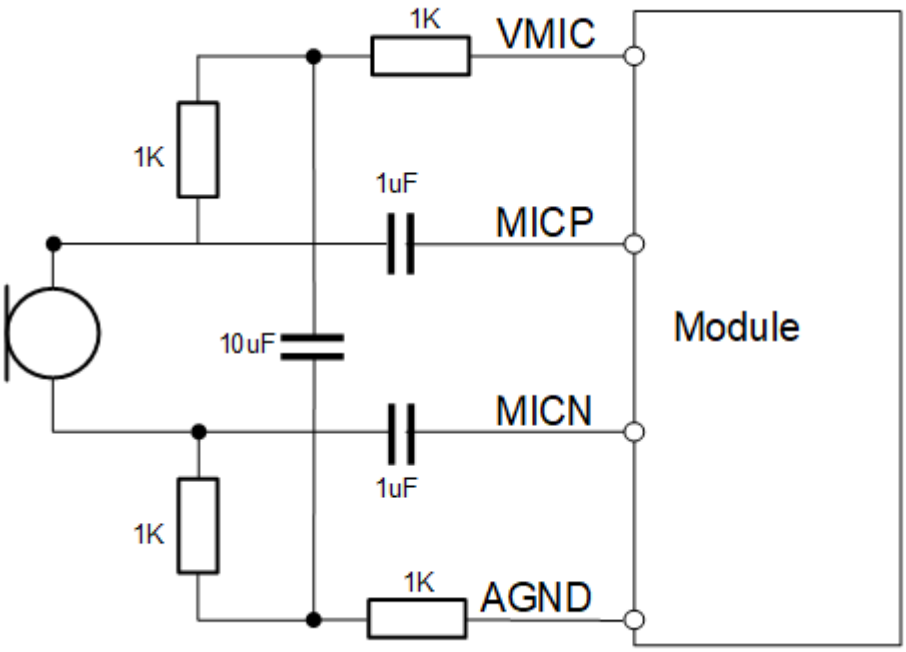

Figure 18: **Differential microphone connection**

If the microphone lines are long, use the above configuration. It is recommended to use an additional RC-filter for VMIC (for example 1kOhm, 10µF and 1kOhm as shown in Figure 18) if a high microphone gain is necessary.

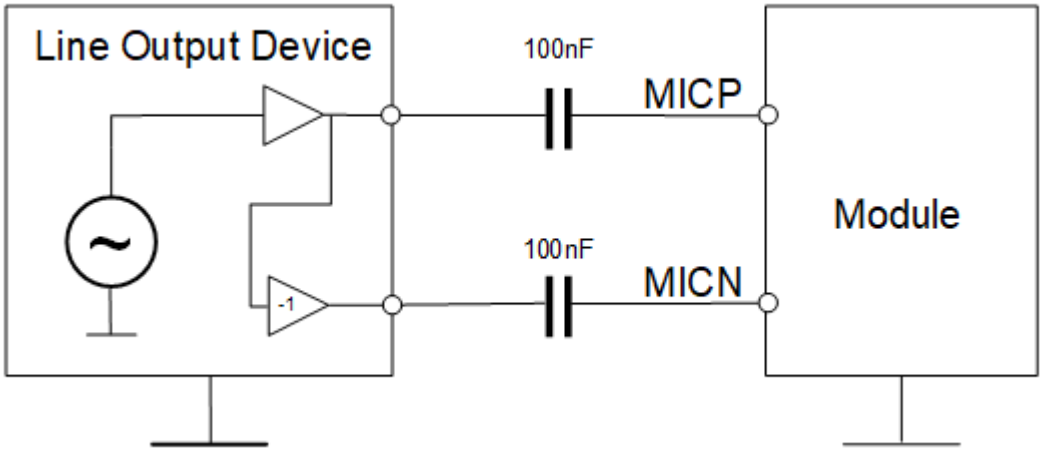

Figure 19: **Line input**

Using the line input configuration the output level of the ground related balanced source should be as high as possible to achieve the best SNR.

3.1.8.2 Loudspeaker Output

ELS62 provides a differential loudspeaker output EPP/EPN. If the output is used as line output, the application should provide a capacitor decoupled differential input to eliminate GSM humming. A single ended connection to a speaker or a line input is strongly not recommended.

The following figures show the typical output configurations.

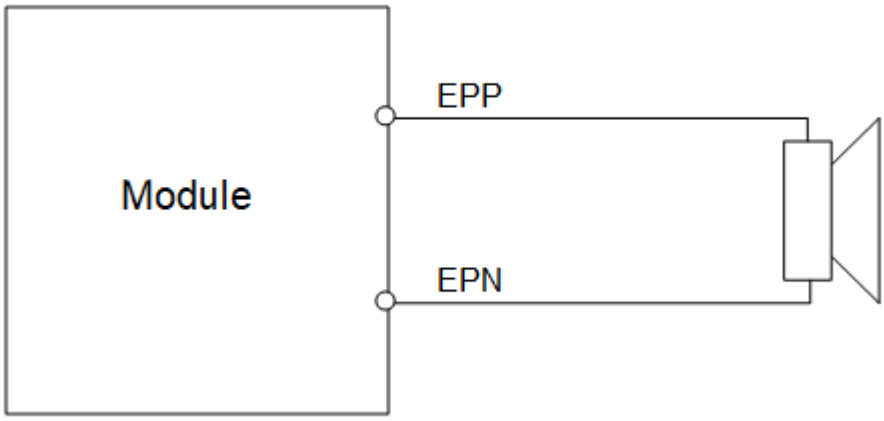

Figure 20: **Differential loudspeaker connection**

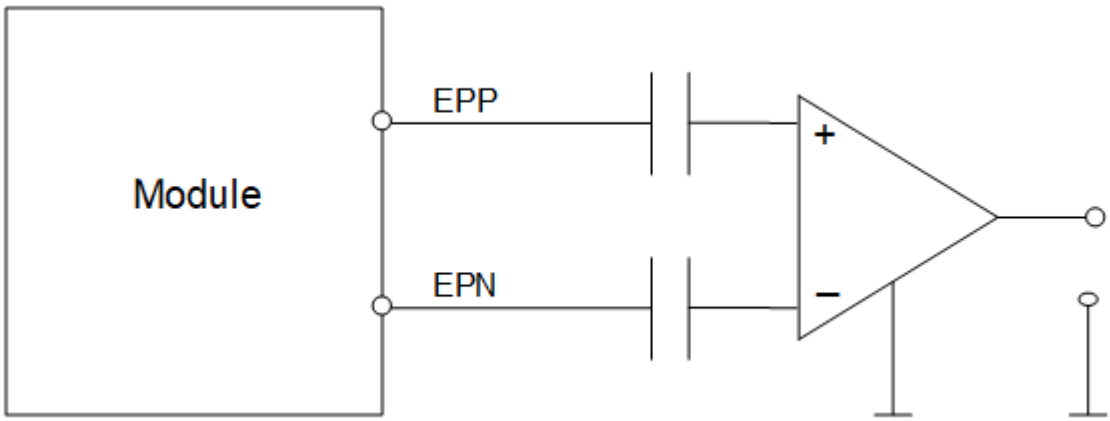

Figure 21: **Line output connection**

3.1.8.3 Electrical Characteristics of the Voiceband Part

Setting Audio Parameters by AT Commands

The input and output volume of audio modes for ELS62 can be adjusted according to the AT command parameter listed in the table below. Each audio mode is assigned a separate set of parameters.

Table 10: Audio parameters adjustable by AT command

Parameter	Influence to	Range	Gain range	Calculation
AT^SNFI				
inVolStep	Digital TX Gain	0...48	-36...+12dB	1dB steps
inpgaStep	Codec Tx Gain	0...4	0...+24dB	6dB steps
AT^SNFO				
outVolStep	Digital RX Gain	0...11	-36...0dB	

Audio Programming Model

The audio programming model shows how the signal path can be influenced by varying AT command parameters. For more information on the AT commands and parameters see [1].

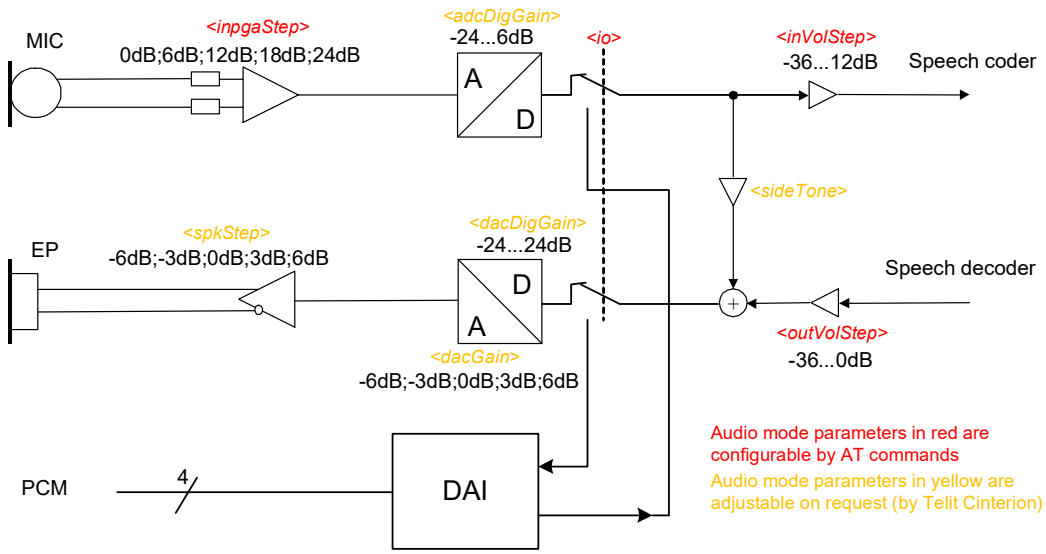

Figure 22: Audio programming model

Characteristics of Audio Modes

The electrical characteristics of the voiceband part depend on the current audio mode set with AT command. All values are noted for default gains, e.g. the default parameters are left unchanged.

Note: With regard to acoustic shock, the cellular application must be designed to avoid sending false AT commands that might increase amplification, e.g. for a highly sensitive ear-piece. A protection circuit should be implemented in the cellular application.

3.1.9 GPIO Interface

ELS62 offers a GPIO interface with 19 GPIO lines. The GPIO lines are shared with other interfaces or functions: Status LED (see Section 3.1.10.1), ASC0 (see Section 3.1.4), ASC1 (see Section 3.1.5), DAI interface (see Section 3.1.7), and SIM Switch.

The following table shows the configuration variants for the GPIO pads. All variants are mutually exclusive, i.e. a pad configured for instance as Status LED is locked for alternative usage.

Table 11: GPIO lines and possible alternative assignment

GPIO	Status LED	SIM SWITCH	ASC0	ASC1	DAI
GPIO1			DTR0		
GPIO2			DCD0		
GPIO3			DSR0		
GPIO5	LED				
GPIO6					
GPIO7					
GPIO8		SIMSWITCH			
GPIO11					
GPIO12					
GPIO13					MCLK
GPIO16				RXD1	
GPIO17				TXD1	
GPIO18				RTS1	
GPIO19				CTS1	
GPIO20					DOUT
GPIO21					DIN
GPIO22					FSC
GPIO23					BCLK
GPIO24			RING0		

After startup, the above mentioned alternative GPIO line assignments can be configured using AT commands (see [1]). The configuration is non-volatile and available after module restart.

The following figure shows the startup behavior of the GPIO interface.

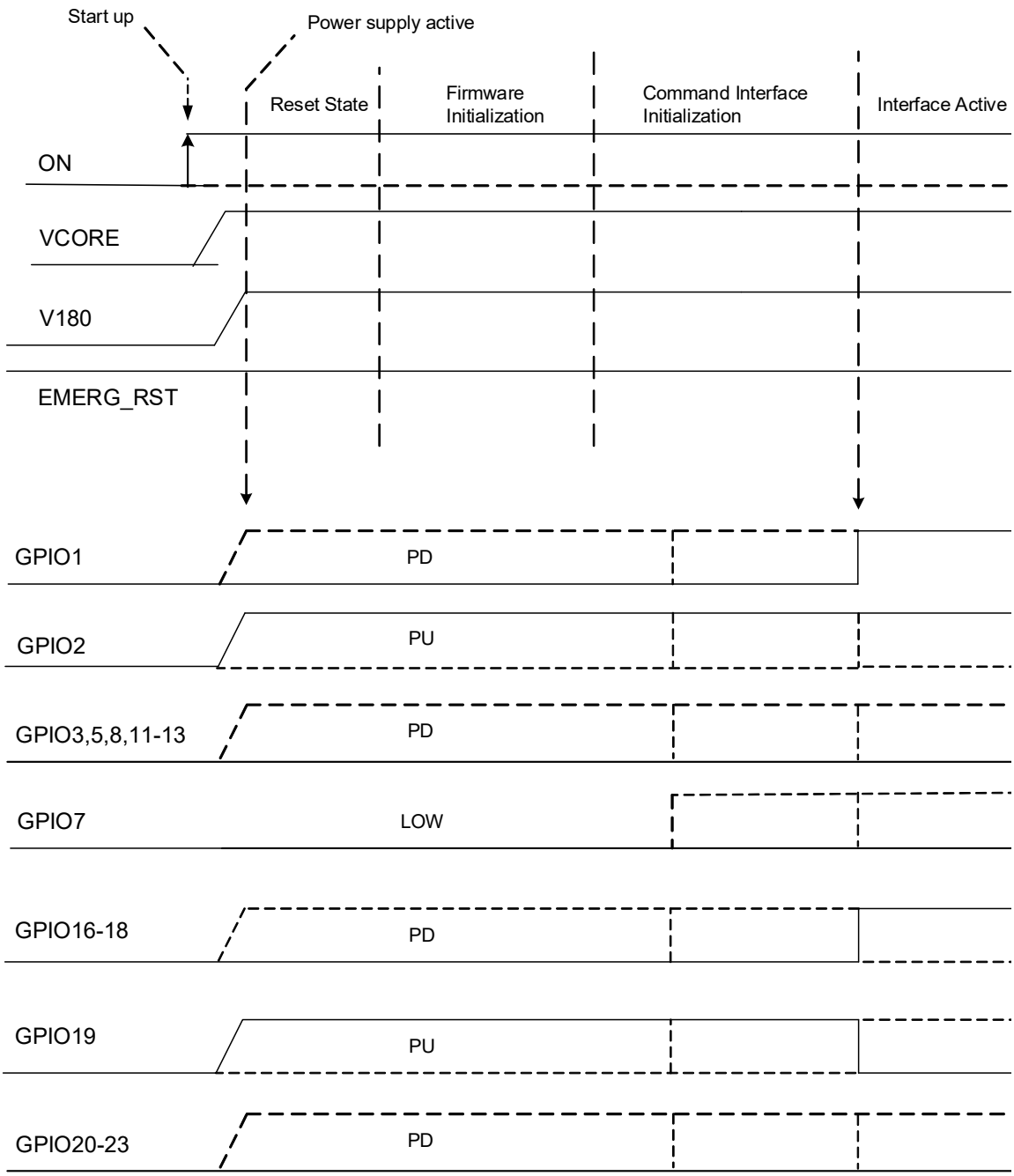

Figure 23: **GPIO startup behavior**

3.1.10 Control Signals

3.1.10.1 Status LED

The GPIO5 interface line can be configured to drive a status LED that indicates different operating modes of the module (for GPIOs see Section 3.1.9). GPIO and LED functionality are mutually exclusive.

To take advantage of this function, connect an LED to the GPIO5/LED line as shown in Figure 24.

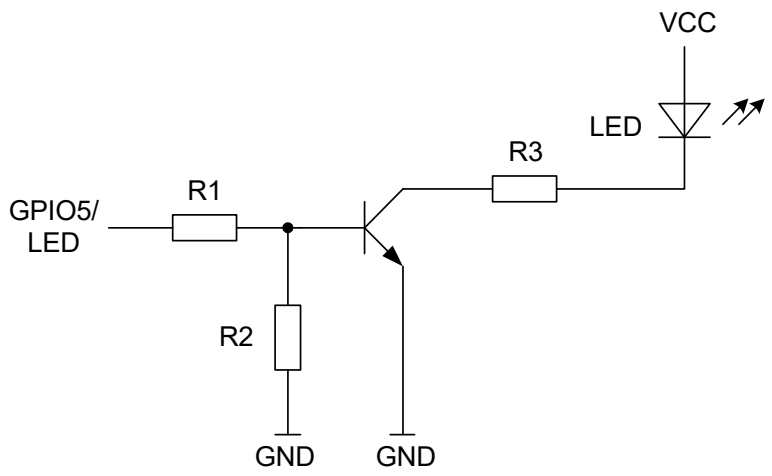

Figure 24: **Status signaling with LED driver**

3.1.10.2 Power Indication Circuit

In Power Down mode the maximum voltage at any digital or analog interface line must not exceed +0.3V (see also Section 3.1.2.1). Exceeding this limit for any length of time might cause permanent damage to the module.

It is therefore recommended to implement a power indication signal that reports the module's power state and shows whether it is active or in Power Down mode. While the module is in Power Down mode all signals with a high level from an external application need to be set to low state or high impedance state. The sample power indication circuit illustrated in Figure 25 denotes the module's active state with a low signal and the module's Power Down mode with a high signal or high impedance state.

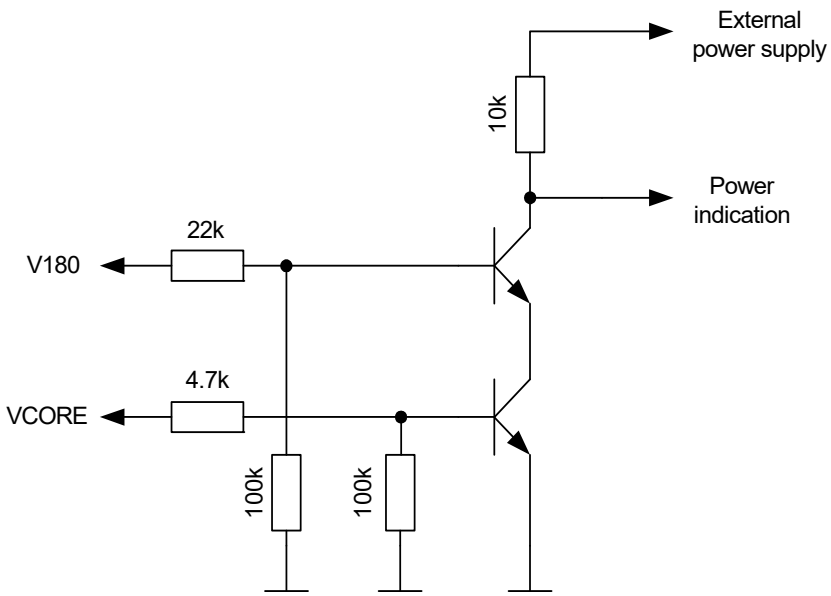

Figure 25: **Power indication circuit**

3.1.10.3 Host Wakeup

If no call, data or message transfer is in progress, the host may shut down its own USB interface to save power. If a call or other request (URC's, messages) arrives, the host can be notified of these events and be woken up again by a state transition of the ASC0 interface's RING0 line. This functionality should only be used with legacy USB applications not supporting the recommended USB suspend and resume mechanism as described in [6]. For more information on how to configure the RING0 line by AT^SCFG command see [1].

Possible RING0 line states are listed in Table 12.

Table 12: Host wakeup lines

Signal	I/O	Description
RING0	O	Inactive to active low transition: 0 = The host shall wake up 1 = No wake up request

3.1.10.4 Fast Shutdown

The FST_SHDN line triggers the module's fast shutdown procedure. The fast shutdown procedure ensures data integrity during shutdown, but will no longer deregister gracefully from the network thus saving the time normally required for network deregistration.

The FST_SHDN line is an active low control signal and must be applied via an open drain or open collector circuit (see Table 4 for electrical characteristics). It is recommended to verify the behavior of the external application especially during the boot and initialization phase against back powering and unintentional fast shutdown.

It is recommended to keep the FST_SHDN line low until the module has shut down. A low level of the V180 signal indicates that the module has entered the Power Down mode. No shutdown URCs will be issued with a fast shutdown. Thus, it is recommended to monitor the V180 line by the external application. Other reference voltage lines may still show a high level.

Once V180 is low, the external application can cut the module's power supply.

In order not to trigger a restart loop of the module, the ON line shall be released by the external application, and not be actively driven continuously.

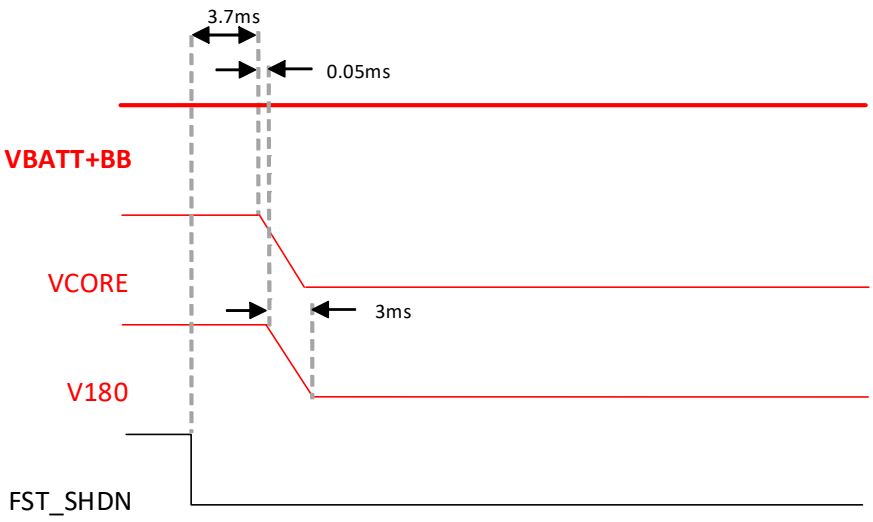

Figure 26: **Fast shutdown timing**

The timing of Figure 26 is typical value, and the final result is subject to the actual test result.

Please note that the normal software controlled shutdown using AT^SMSO will allow option for a fast shutdown, i.e., without network deregistration. For details see [1].

Sample Capacity Calculation

The following formula is a guideline for a capacitor required in a fast shutdown circuit to buffer enough energy to complete the fast shutdown process.

Depending on the application design and use cases, the factors may vary.

This sample capacity calculation is based on the following assumptions:

- Single power supply for both $BATT+_{BB}$ and $BATT+_{RF}$
- Power supply voltage range 3.0V - 4.5V
- A capacitor is placed on the power supply line to buffer energy for fast shutdown process.

  Note: Do not place the capacitor on the FST_SHDN line of module.

Capacitor energy:

$E_{[J]} = 0.5*C * (V_{max}^2 - V_{min}^2) * \text{Aging factor}$

Example:

Aging factor e.g. = 0.7

$E_{[J]}$= 0.5 * 1133uF * ((4.5V)^2 - (3.0V)^2) * 0.7 =0.00446J

Note: V_{max} can be limited by the module supply and/or capacitor voltage. Same applies for the V_{min} which is mostly limited by VBATT min.

Module energy usage:

V_{avg} = (V_{max} + V_{min})/ 2

A_{avg} = See typical values in Table 16.

$E_{[W]}$ = V_{avg} * A_{avg} * Efficiency

Example:

Power Circuit Efficiency factor, e.g. = 0.8

$E_{[W]}$ = ((4.5V + 3.0V) / 2) * 0.2A * 0.8 = 0.6375W (assuming the Cat NB1/2 worst case)

Discharge time:

$T_{[s]}$ = $E_{[J]}$ / $E_{[W]}$

Example:

$T_{[s]}$ = 0.00446J / 0.6375W = 0.07s

3.2 RF Antenna Interface

The ELS62 GSM/LTE antenna interface comprises a GSM/LTE antenna. The RF interface has an impedance of 50Ω.

The external antenna must be matched properly to achieve best performance regarding radiated power, modulation accuracy and harmonic suppression. Antenna matching networks are not included on the ELS62 module and should be placed in the host application if the antenna does not have an impedance of 50Ω.

Regarding the return loss ELS62 provides the following values in the active band:

Table 13: Return loss in the active band

State of module	Return loss of module	Recommended return loss of application
Receive	≥ 8dB	≥ 12dB
Transmit	Not applicable	≥ 12dB
Idle	≤ 5dB	Not applicable

3.2.1 Antenna Interface Specifications.

Table 14: **RF Antenna interface GSM/LTE (at normal temperature and voltage range)**

Parameter	Conditions	Min.	Typi-cal	Max.	Unit
LTE connectivity	Band 1, 2, 3, 4, 5, 7, 8, 20, 28, 34, 38, 39, 40, 41, 66				
Receiver Input Sensitivity @ ARP (channel. bandwidth 5MHz) Typical @25°C 3.8V	LTE 2100 Band 1	-96.8	-101.5		dBm
	LTE 1900 Band 2	-94.8	-101.0		dBm
	LTE 1800 Band 3	-93.8	-100.5		dBm
	LTE 2100 Band 4	-96.8	-101.5		dBm
	LTE 850 Band 5	-94.8	-102.0		dBm
	LTE 2600 Band 7	-94.8	-100.5		dBm
	LTE 900 Band 8	-93.8	-102.5		dBm
	LTE 800 Band 20	-93.8	-102.5		dBm
	LTE 700 Band 28	-95.3	-102.0		dBm
	LTE 2000 Band 34	-96.8	-100.0		dBm
	LTE 2600 Band 38		-101.0		dBm
	LTE 1900 Band 39	-96.8	-100.0		dBm
	LTE 2300 Band 40	-96.8	-100.5		dBm
	LTE 2500 Band 41	-94.8	-101.0		dBm
	LTE 2100 Band 66	-96.3	-101.5		dBm
LTE Maximum TX power Typical @25°C 3.8V 5MHz 1RB_Low	LTE 2100 Band 1	+20.3	+23.0	+25.7	dBm
	LTE 1900 Band 2	+20.3	+23.0	+25.7	dBm
	LTE 1800 Band 3	+20.3	+23.0	+25.7	dBm
	LTE 2100 Band 4	+20.3	+23.0	+25.7	dBm
	LTE 850 Band 5	+20.3	+23.0	+25.7	dBm
	LTE 2600 Band 7	+18.8	+23.0	+25.7	dBm
	LTE 900 Band 8	+20.3	+23.0	+25.7	dBm
	LTE 800 Band 20	+20.3	+23.0	+25.7	dBm
	LTE 700 Band 28	+19.8	+22.5	+25.7	dBm
	LTE 2000 Band 34	+20.3	+23.0	+25.7	dBm
	LTE 2600 Band 38	+20.3	+23.0	+25.7	dBm
	LTE 1900 Band 39	+20.3	+23.0	+25.7	dBm
	LTE 2300 Band 40	+20.3	+23.0	+25.7	dBm
	LTE 2500 Band 41	+20.3	+23.0	+25.7	dBm

Table 14: **RF Antenna interface GSM/LTE (at normal temperature and voltage range)**

Parameter		Conditions	Min.	Typi-cal	Max.	Unit
		LTE 2100 Band 66	+20.3	+23.0	+25.7	dBm
GPRS coding schemes		Class 12, CS1 to CS4				
EGPRS		Class 12, MCS1 to MCS9				
GSM Frequency range Uplink (MS to BTS)		GSM 850	824		849	MHz
		E-GSM 900	880		915	MHz
		DCS 1800	1710		1785	MHz
		PCS 1900	1850		1910	MHz
GSM Frequency range Downlink (BTS to MS)		GSM 850	869		894	MHz
		E-GSM 900	925		960	MHz
		DCS 1800	1805		1880	MHz
		PCS 1900	1930		1990	MHz
Static Receiver input Sensitivity @ ARP Typical @25°C 3.8V		GSM 850	-102	-110.5		dBm
		E-GSM 900	-102	-111.0		dBm
		DCS 1800	-102	-109.0		dBm
		PCS 1900	-102	-109.5		dBm
RF Power @ ARP with 50Ω Load	GSM	GSM 850	30.5	32.7	35.5	dBm
		E-GSM 900	30.5	32.7	35.5	dBm
		DCS 1800	27.5	29.7	32.5	dBm
		PCS 1900	27.5	29.7	32.5	dBm
RF Power @ ARP with 50Ω Load, (ROPR = 0, i.e. no reduction) Typical @25°C 3.8V	GPRS, 1 TX	GSM 850		32.7		dBm
		E-GSM 900		32.7		dBm
		DCS 1800		29.7		dBm
		PCS 1900		29.7		dBm
	EDGE, 1 TX	GSM 850		26.5		dBm
		E-GSM 900		26.5		dBm
		DCS 1800		25.5		dBm
		PCS 1900		25.5		dBm
	GPRS, 2 TX	GSM 850		32.7		dBm
		E-GSM 900		32.7		dBm
		DCS 1800		29.7		dBm
		PCS 1900		29.7		dBm

Table 14: **RF Antenna interface GSM/LTE (at normal temperature and voltage range)**

Parameter		Conditions	Min.	Typi-cal	Max.	Unit
	EDGE, 2 TX	GSM 850		26.5		dBm
		E-GSM 900		26.5		dBm
		DCS 1800		25.5		dBm
		PCS 1900		25.5		dBm
	GPRS, 3 TX	GSM 850		32.7		dBm
		E-GSM 900		32.7		dBm
		DCS 1800		29.7		dBm
		PCS 1900		29.7		dBm
	EDGE, 3 TX	GSM 850		26.5		dBm
		E-GSM 900		26.5		dBm
		DCS 1800		25.5		dBm
		PCS 1900		25.5		dBm
	GPRS, 4 TX	GSM 850		32.2		dBm
		E-GSM 900		32.2		dBm
		DCS 1800		29.7		dBm
		PCS 1900		29.7		dBm
	EDGE, 4 TX	GSM 850		26.5		dBm
		E-GSM 900		26.5		dBm
		DCS 1800		25.5		dBm
		PCS 1900		25.5		dBm
RF Power @ ARP with 50Ω Load, (ROPR = 1) Typical @25°C 3.8V	GPRS, 1 TX	GSM 850		32.7		dBm
		E-GSM 900		32.7		dBm
		DCS 1800		29.7		dBm
		PCS 1900		29.7		dBm
	EDGE, 1 TX	GSM 850		26.5		dBm
		E-GSM 900		26.5		dBm
		DCS 1800		25.5		dBm
		PCS 1900		25.5		dBm
	GPRS, 2 TX	GSM 850		32.7		dBm
		E-GSM 900		32.7		dBm
		DCS 1800		29.7		dBm
		PCS 1900		29.7		dBm

Table 14: **RF Antenna interface GSM/LTE (at normal temperature and voltage range)**

Parameter		Conditions	Min.	Typi-cal	Max.	Unit
	EDGE, 2 TX	GSM 850		26.5		dBm
		E-GSM 900		26.5		dBm
		DCS 1800		25.5		dBm
		PCS 1900		25.5		dBm
	GPRS, 3 TX	GSM 850		32.7		dBm
		E-GSM 900		32.7		dBm
		DCS 1800		29.7		dBm
		PCS 1900		29.7		dBm
	EDGE, 3 TX	GSM 850		26.5		dBm
		E-GSM 900		26.5		dBm
		DCS 1800		25.5		dBm
		PCS 1900		25.5		dBm
	GPRS, 4 TX	GSM 850		30.7		dBm
		E-GSM 900		30.7		dBm
		DCS 1800		29.7		dBm
		PCS 1900		29.7		dBm
	EDGE, 4 TX	GSM 850		26.5		dBm
		E-GSM 900		26.5		dBm
		DCS 1800		25.5		dBm
		PCS 1900		25.5		dBm
RF Power @ ARP with 50Ω Load, (ROPR = 2) Typical @25°C 3.8V	GPRS, 1 TX	GSM 850		32.7		dBm
		E-GSM 900		32.7		dBm
		DCS 1800		29.7		dBm
		PCS 1900		29.7		dBm
	EDGE, 1 TX	GSM 850		26.5		dBm
		E-GSM 900		26.5		dBm
		DCS 1800		25.5		dBm
		PCS 1900		25.5		dBm
	GPRS, 2 TX	GSM 850		32.7		dBm
		E-GSM 900		32.7		dBm
		DCS 1800		29.7		dBm
		PCS 1900		29.7		dBm

Table 14: **RF Antenna interface GSM/LTE (at normal temperature and voltage range)**

Parameter		Conditions	Min.	Typi-cal	Max.	Unit
	EDGE, 2 TX	GSM 850		26.5		dBm
		E-GSM 900		26.5		dBm
		DCS 1800		25.5		dBm
		PCS 1900		25.5		dBm
	GPRS, 3 TX	GSM 850		30.7		dBm
		E-GSM 900		30.7		dBm
		DCS 1800		27.7		dBm
		PCS 1900		27.7		dBm
	EDGE, 3 TX	GSM 850		26.5		dBm
		E-GSM 900		26.5		dBm
		DCS 1800		25.5		dBm
		PCS 1900		25.5		dBm
	GPRS, 4 TX	GSM 850		28.7		dBm
		E-GSM 900		28.7		dBm
		DCS 1800		25.2		dBm
		PCS 1900		25.2		dBm
	EDGE, 4 TX	GSM 850		26.5		dBm
		E-GSM 900		26.5		dBm
		DCS 1800		25.5		dBm
		PCS 1900		25.5		dBm
RF Power @ ARP with 50Ω Load, (ROPR = 3) Typical @25°C 3.8V	GPRS, 1 TX	GSM 850		32.7		dBm
		E-GSM 900		32.7		dBm
		DCS 1800		29.7		dBm
		PCS 1900		29.7		dBm
	EDGE, 1 TX	GSM 850		26.5		dBm
		E-GSM 900		26.5		dBm
		DCS 1800		25.5		dBm
		PCS 1900		25.5		dBm
	GPRS, 2 TX	GSM 850		30.7		dBm
		E-GSM 900		30.7		dBm
		DCS 1800		27.7		dBm
		PCS 1900		27.7		dBm

Table 14: **RF Antenna interface GSM/LTE (at normal temperature and voltage range)**

Parameter		Conditions	Min.	Typi-cal	Max.	Unit
	EDGE, 2 TX	GSM 850		26.5		dBm
		E-GSM 900		26.5		dBm
		DCS 1800		25.5		dBm
		PCS 1900		25.5		dBm
	GPRS, 3 TX	GSM 850		28.7		dBm
		E-GSM 900		28.7		dBm
		DCS 1800		25.7		dBm
		PCS 1900		25.7		dBm
	EDGE, 3 TX	GSM 850		26.5		dBm
		E-GSM 900		26.5		dBm
		DCS 1800		25.5		dBm
		PCS 1900		25.5		dBm
	GPRS, 4 TX	GSM 850		26.7		dBm
		E-GSM 900		26.7		dBm
		DCS 1800		23.7		dBm
		PCS 1900		23.7		dBm
	EDGE, 4 TX	GSM 850		26.5		dBm
		E-GSM 900		26.5		dBm
		DCS 1800		25.5		dBm
		PCS 1900		25.5		dBm
RF Power @ ARP with 50Ω Load, (ROPR = 4, i.e. maxi-mum reduction) Typical @25°C 3.8V	GPRS, 1 TX	GSM 850		32.7		dBm
		E-GSM 900		32.7		dBm
		DCS 1800		29.7		dBm
		PCS 1900		29.7		dBm
	EDGE, 1 TX	GSM 850		26.5		dBm
		E-GSM 900		26.5		dBm
		DCS 1800		25.5		dBm
		PCS 1900		25.5		dBm
	GPRS, 2 TX	GSM 850		30.7		dBm
		E-GSM 900		30.7		dBm
		DCS 1800		27.7		dBm
		PCS 1900		27.7		dBm

Table 14: **RF Antenna interface GSM/LTE (at normal temperature and voltage range)**

Parameter		Conditions	Min.	Typi-cal	Max.	Unit
	EDGE, 2 TX	GSM 850		24.5		dBm
		E-GSM 900		24.5		dBm
		DCS 1800		23.5		dBm
		PCS 1900		23.5		dBm
	GPRS, 3 TX	GSM 850		28.7		dBm
		E-GSM 900		28.7		dBm
		DCS 1800		25.7		dBm
		PCS 1900		25.7		dBm
	EDGE, 3 TX	GSM 850		22.5		dBm
		E-GSM 900		22.5		dBm
		DCS 1800		21.5		dBm
		PCS 1900		21.5		dBm
	GPRS, 4 TX	GSM 850		26.7		dBm
		E-GSM 900		26.7		dBm
		DCS 1800		23.7		dBm
		PCS 1900		23.7		dBm
	EDGE, 4 TX	GSM 850		20.5		dBm
		E-GSM 900		20.5		dBm
		DCS 1800		19.5		dBm
		PCS 1900		19.5		dBm

3.2.2 Antenna Installation

The antenna is connected by soldering the antenna pad (ANT_MAIN) and its neighboring ground pads (GND) directly to the application's PCB. The antenna pads are the antenna reference points (ARP) for ELS62. All RF data specified throughout this document is related to the ARP.

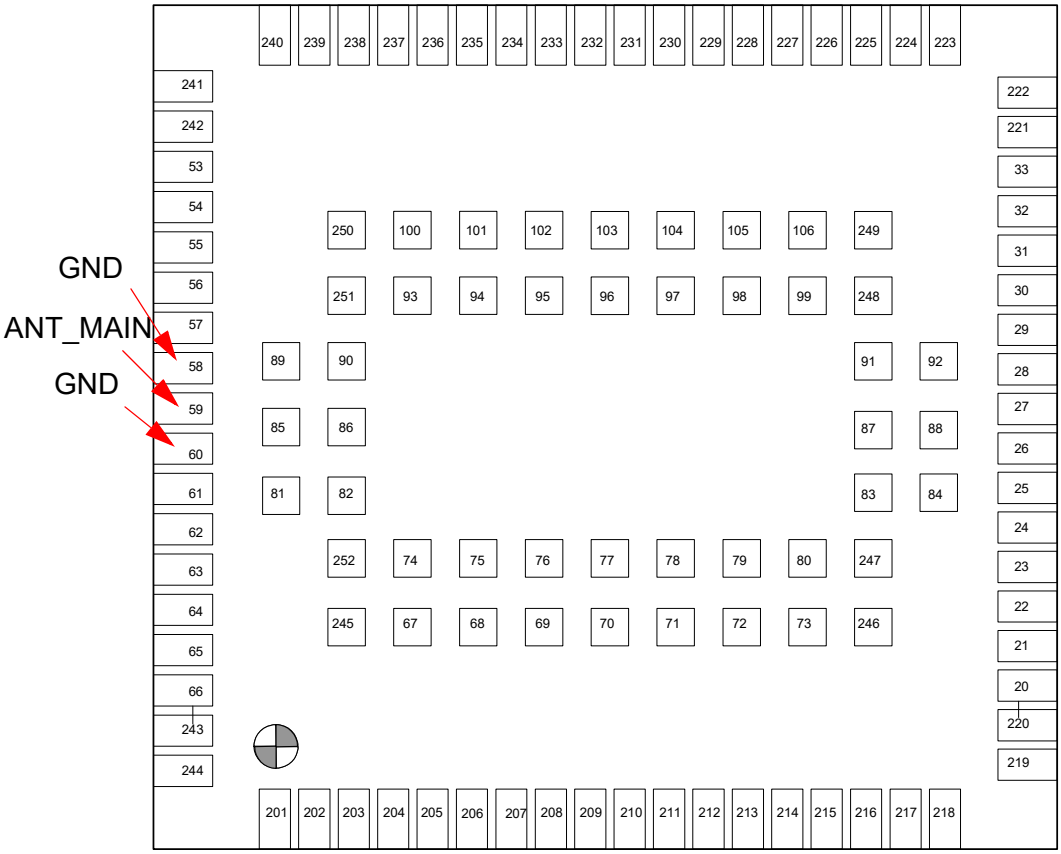

Figure 27: Antenna pads (bottom view)

The distance between the antenna pad and its neighboring GND pads has been optimized for best possible impedance. To prevent mismatch, special attention should be paid to these pads on the application's PCB.

The wiring of the antenna connection, starting from the antenna pad to the application's antenna should result in a 50Ω line impedance. Line width and distance to the GND plane needs to be optimized with regard to the PCB's layer stack. Some examples are given in Section 3.2.3.

To prevent receiver desensitization, due to interference generated by fast transients such as high speed clocks on the external application PCB, it is recommended to realize the antenna connection line using embedded Stripline rather than Micro-Stripline technology. Please see Section 3.2.3.1 for examples of how to design the antenna connection in order to achieve the required 50Ω line impedance.

For type approval purposes, the use of a 50Ω coaxial antenna connector (U.FL-R-SMT) might be necessary. In this case the U.FL-R-SMT connector should be placed as close as possible to ELS62's antenna pad.

3.2.3 RF Line Routing Design

3.2.3.1 Line Arrangement Examples

Several dedicated tools are available to calculate line arrangements for specific applications and PCB materials - for example from http://www.polarinstruments.com/ (commercial software) or from https://www.awr.com/awr-software/options/tx-line or https://saturnpcb.com/saturn-pcb-toolkit/ (free software).

Embedded Stripline

This figure below shows a line arrangement example for embedded stripline with 65µm FR4 prepreg (type: 1080) and 710µm FR4 core (4-layer PCB).

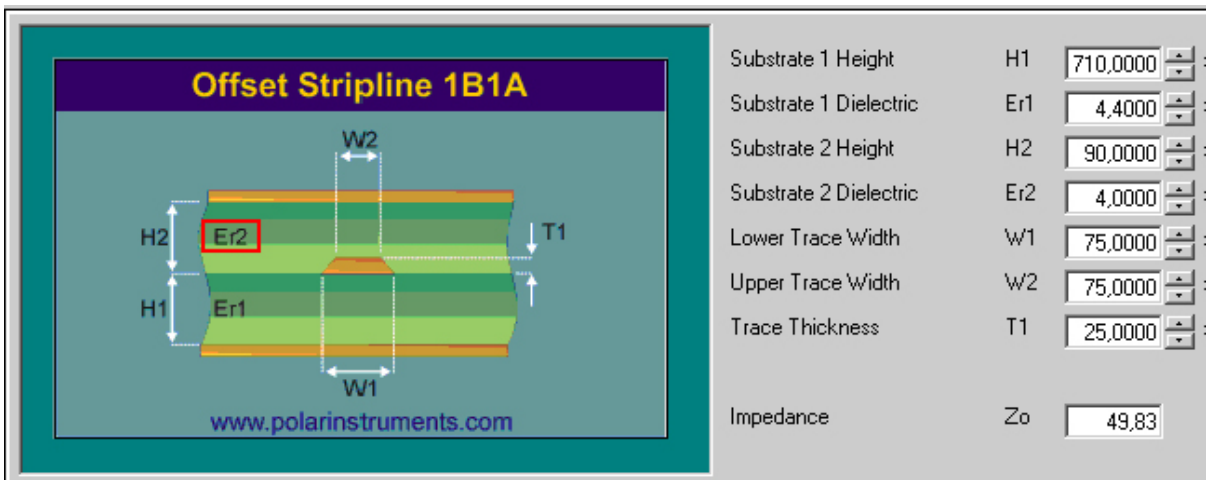

Figure 28: **Embedded Stripline with 65µm prepreg (1080) and 710µm core**

Micro-Stripline

This section gives two line arrangement examples for micro-stripline.

- Micro-Stripline on 1.0mm Standard FR4 2-Layer PCB

  The following two figures show examples with different values for D1 (ground strip separation).

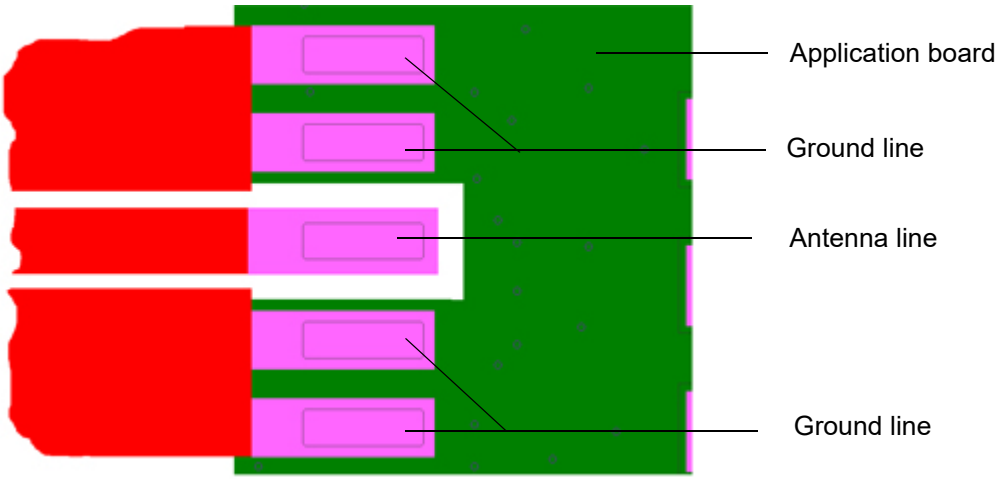

Figure 29: **Micro-Stripline on 1.0mm standard FR4 2-layer PCB - example 1**

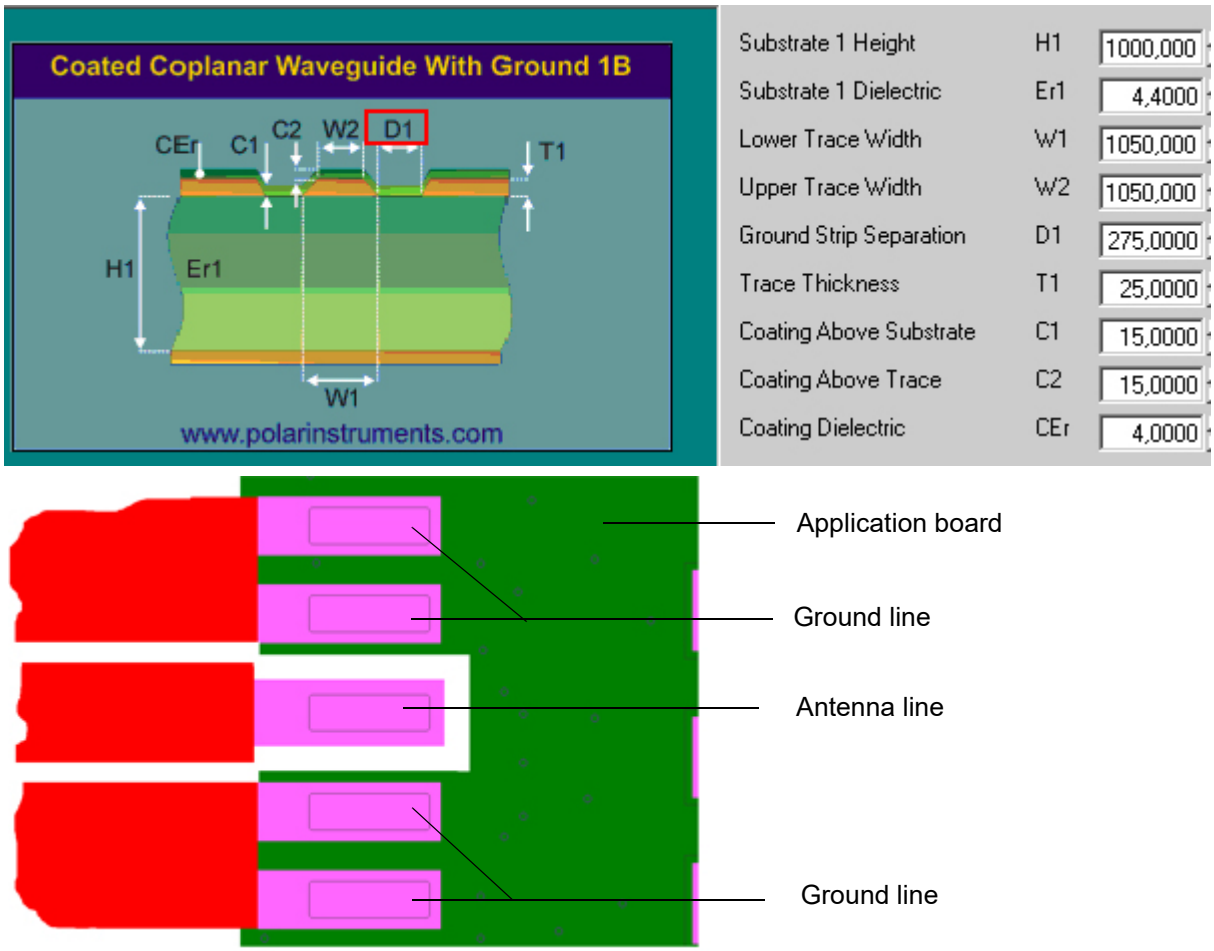

Figure 30: Micro-Stripline on 1.0mm Standard FR4 PCB - example 2

- Micro-Stripline on 1.5mm Standard FR4 2-Layer PCB

  The following two figures show examples with different values for D1 (ground strip separation).

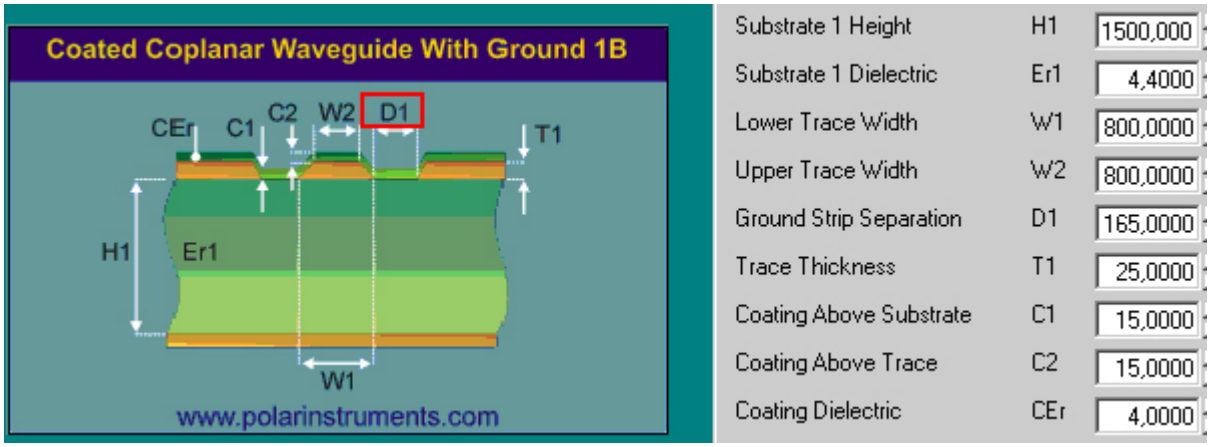

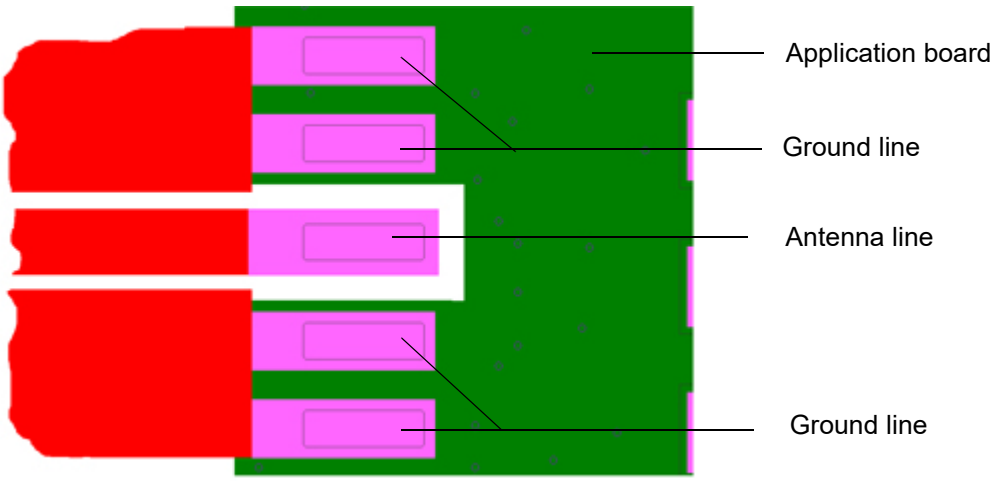

Figure 31: **Micro-Stripline on 1.5mm Standard FR4 PCB - example 1**

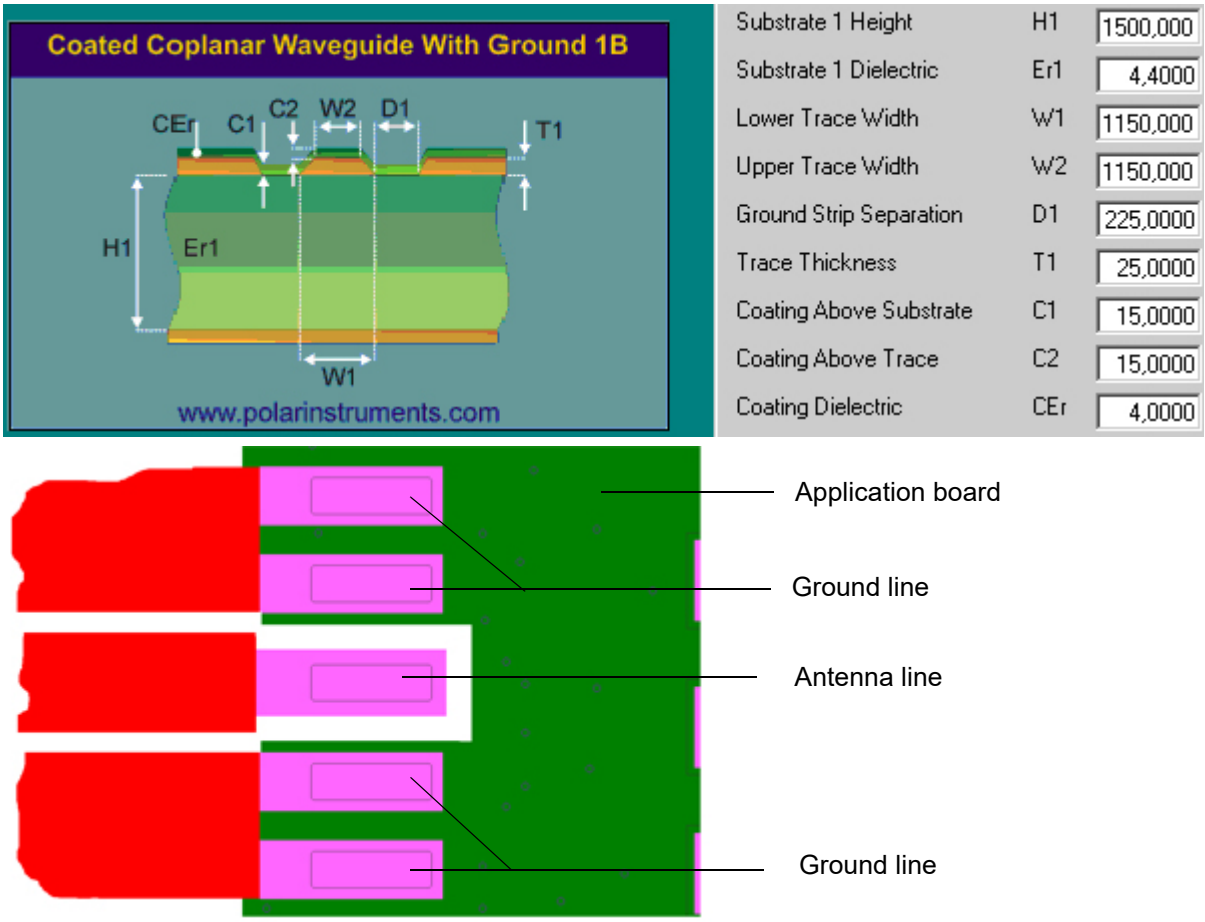

Figure 32: **Micro-Stripline on 1.5mm Standard FR4 PCB - example 2**

3.2.3.2 Routing Example

Interface to RF Connector

Figure 33 and Figure 34 show a sample connection of the module's antenna pad at the bottom layer of the module PCB with an application PCB's coaxial antenna connector. Line impedance depends on line width, but also on other PCB characteristics such as dielectric, height and layer gap. The sample line width of 0.26mm and the spaces of 0.2mm are only recommended for an application with a PCB layer stack resembling the one of the ELS62 evaluation board, and with layer 5 cut clear (Bottom layer reference to Layer 4). For different layer stacks the line width will have to follow line routing rules, avoiding 90 degree corners and using the shortest distance to the PCB's coaxial antenna connector.

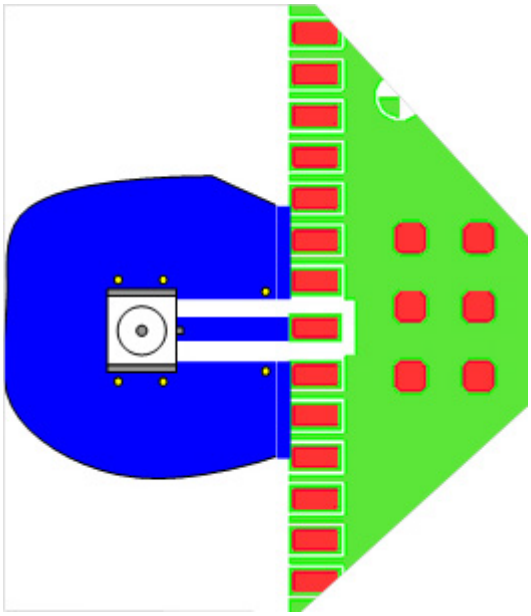

Figure 33: Routing to application's RF connector - top view

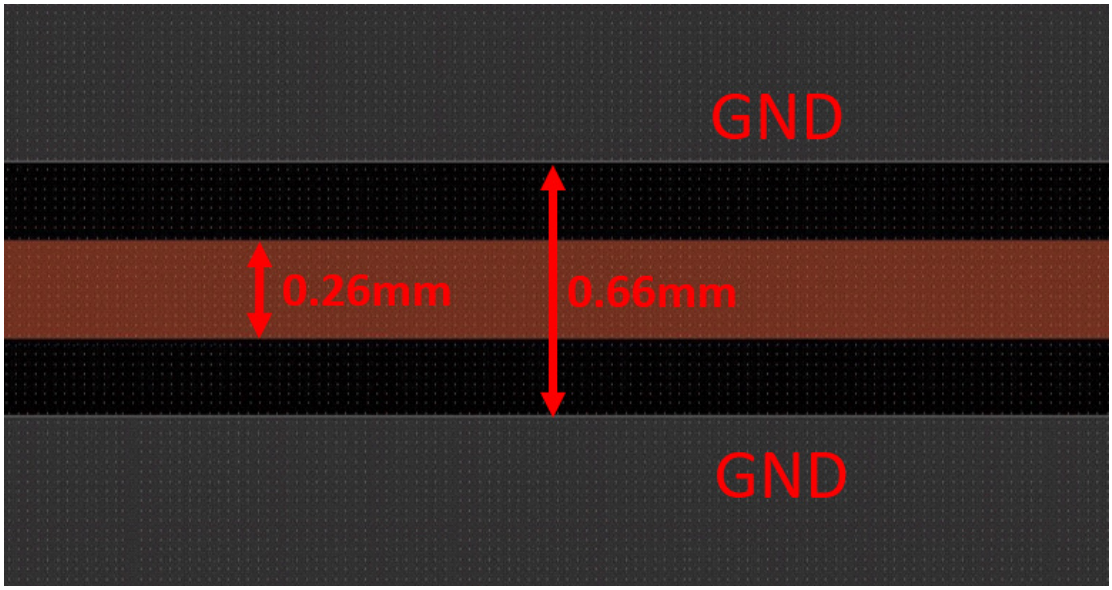

Figure 34: Routing detail

3.3 Sample Application

Figure 35 shows a typical example of how to integrate an ELS62 module with an application. Usage of the various host interfaces depends on the desired features of the application.

Because of the very low power consumption design, current flowing from any other source into the module circuit must be avoided, for example reverse current from high state external control lines. Therefore, the controlling application must be designed to prevent reverse current flow. Otherwise there is the risk of undefined states of the module during startup and shutdown or even of damaging the module.

Because of the high RF field density inside the module, it cannot be guaranteed that no self interference will occur, depending on frequency and the applications grounding concept. The potential interferers may be minimized by placing small capacitors (47pF) at suspected lines (e.g. RXD0, VDDLP, and ON).

While developing SMT applications it is strongly recommended to provide test points for certain signals, i.e., lines to and from the module - for debug and/or test purposes. The SMT application should allow for an easy access to these signals. For details on how to implement test points see [5].

The EMC measures are best practice recommendations. In fact, an adequate EMC strategy for an individual application is very much determined by the overall layout and, especially, the position of components.

Depending on the micro controller used by an external application ELS62's digital input and output lines may require level conversion. Section 3.3.1 shows a possible sample level conversion circuit.

Note: ELS62 is not intended for use with cables longer than 3m.

Disclaimer

No warranty, either stated or implied, is provided on the sample schematic diagram shown in Figure 35 and the information detailed in this section. As functionality and compliance with national regulations depend to a great amount on the used electronic components and the individual application layout manufacturers are required to ensure adequate design and operating safeguards for their products using ELS62 modules.

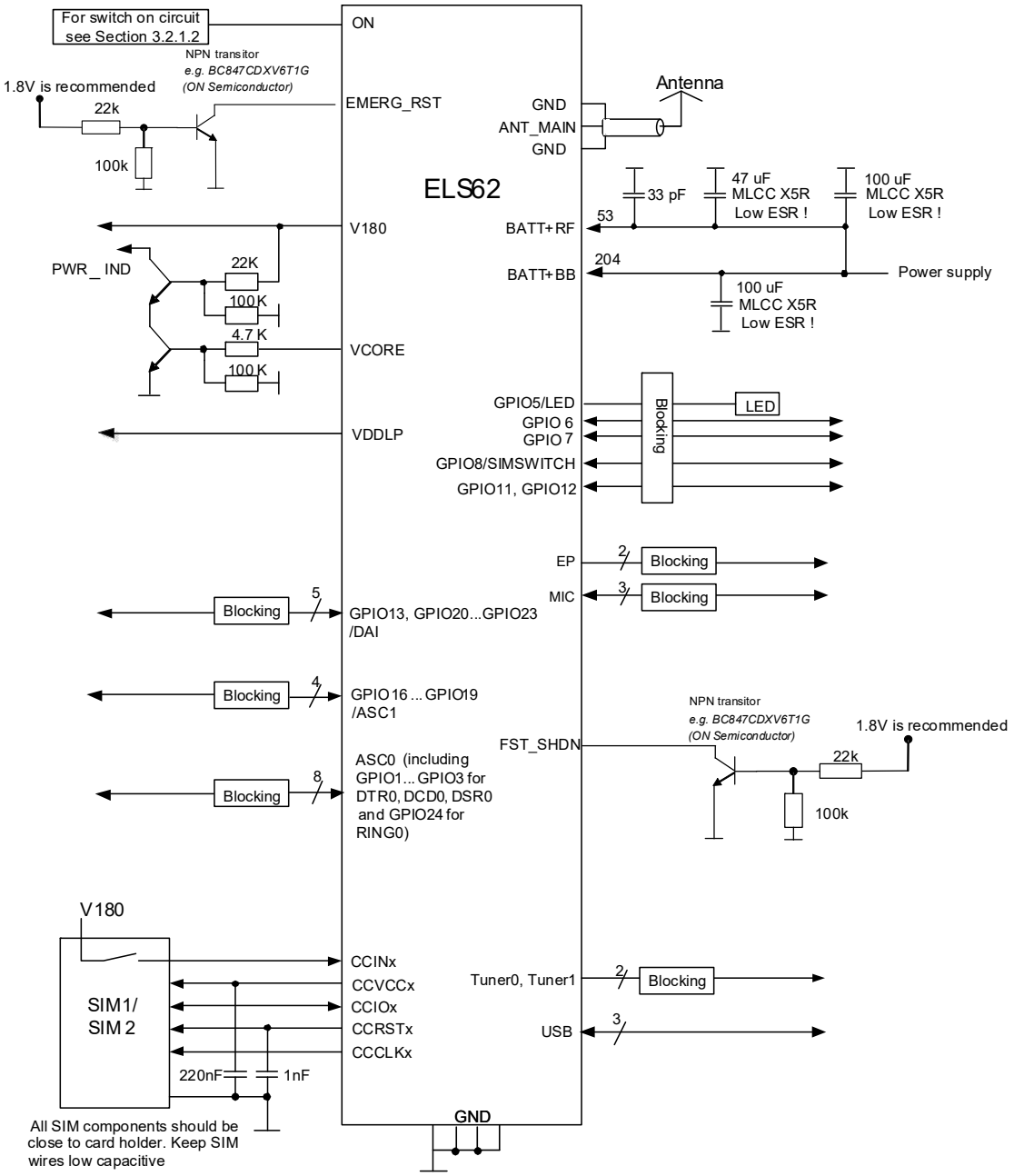

Figure 35: Schematic diagram of ELS62 sample application

3.3.1 Sample Level Conversion Circuit

Depending on the micro controller used by an external application ELS62's digital input and output lines (i.e., ASC0, ASC1 and GPIO lines) may require level conversion. The following Figure 36 shows a sample circuit with recommended level shifters for an external application's micro controller (with VLOGIC between 3.0V...3.6V). The level shifters can be used for digital input and output lines with V_{OH}max=1.85V or V_{IH}max =1.85V.

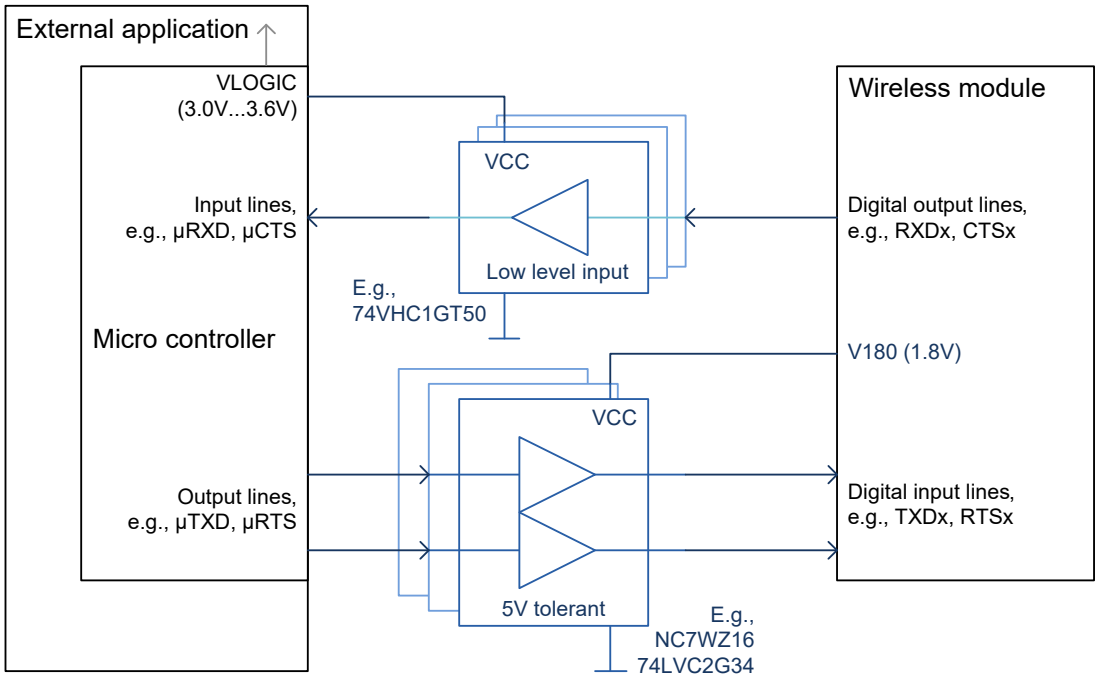

Figure 36: Sample level conversion circuit

4 Operating Characteristics

4.1 Operating Modes

The table below briefly summarizes the various operating modes referred to throughout the document.

Table 15: Overview of operating modes

Mode	Function	
Normal operation	GSM / GPRS / LTE SLEEP	Power saving set automatically when no call is in progress and the USB connection is suspended by host or not present and no active communication via ASC0.
	GSM / GPRS / LTE IDLE	Power saving disabled or an USB connection not suspended, but no call in progress.
	GSM TALK / GSM DATA	Connection between two subscribers is in progress. Power consumption depends on the GSM network coverage and several connection settings (e.g. DTX off/on, FR/EFR/HR, hopping sequences and antenna connection). The following applies when power is to be measured in TALK_GSM mode: DTX off, FR and no frequency hopping.
	GPRS DATA	GPRS data transfer in progress. Power consumption depends on network settings (e.g. power control level), uplink or downlink data rates, and GPRS configuration (e.g. used multislot settings).
	EGPRS DATA	EGPRS data transfer in progress. Power consumption depends on network settings (e.g. power control level), uplink or downlink data rates, and EGPRS configuration (e.g. used multislot settings).
	LTE DATA	LTE data transfer in progress. Power consumption depends on network settings (e.g. TPC Pattern) and data transfer rate.
Power Down	Normal shutdown after sending the power down command. Only a voltage regulator is active for powering the RTC. Software is not active. Interfaces are not accessible. Operating voltage remains applied.	
Airplane mode	Airplane mode shuts down the radio part of the module, causes the module to log off from the network and disables all AT commands whose execution requires a radio connection. Airplane mode can be controlled by AT command (see [1]).	
Alarm mode	Restricted operation launched by RTC alert function when the module is in Power Down mode. In Alarm mode, the module remains deregistered from the network. Limited number of AT commands is accessible.	

4.2 Power Up/Power Down Scenarios

In general, make sure not to turn on ELS62 while it is beyond the safety limits of voltage and temperature stated in Section 3.1.2.1. ELS62 immediately switches off after having started and detected these inappropriate conditions. In extreme cases this can cause permanent damage to the module.

4.2.1 Turn on ELS62

ELS62 can be turned on as described in the following sections:

- Connecting the operating voltage BATT+ (see Section 4.2.1.1).
- Hardware driven switch on by ON line: Starts Normal mode (see Section 4.2.1.2).

After startup or restart, the module will send the URC ^SYSSTART that notifies the host application that the first AT command can be sent to the module (see also [1]).

4.2.1.1 Connecting ELS62 BATT+ Lines

Figure 37 shows sample external application circuits that allow to connect (and also to temporarily disconnect) the module's BATT+ lines from the external application's power supply.

Figure 37 illustrates the application of power employing an externally controlled microcontroller. The voltage supervisory circuit ensures that the power is disconnected and applied again depending on given thresholds.

The transistor T2 mentioned in Figure 37 should have an R_{DS_ON} value ≤ 50mΩ in order to minimize voltage drops.

Such circuits could be useful to maximize power savings for battery driven applications or to completely switch off and restart the module after a firmware update.

After connecting the BATT+ lines the module can then be (re-)started as described in Section 4.2.1.2 and Section 4.2.2.

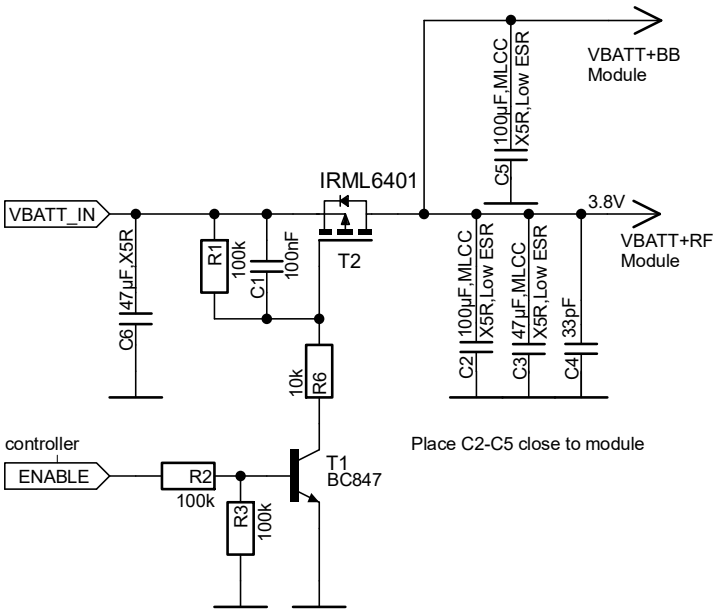

Figure 37: Sample circuit for applying power using an external µC

4.2.1.2 Switch on ELS62 Using ON Signal

After the operating voltage BATT+ is applied, ELS62 can be switched on by means of the ON signal.

The ON signal is an edge triggered signal and allows the input voltage level up to 5V. The module starts into normal mode on detecting the rising edge of the ON signal. The rising edge of ON signal must be applied at least 100 milliseconds later than BATT+. See Figure 39.

The following Figure 38 shows recommendations for possible switch-on circuits.

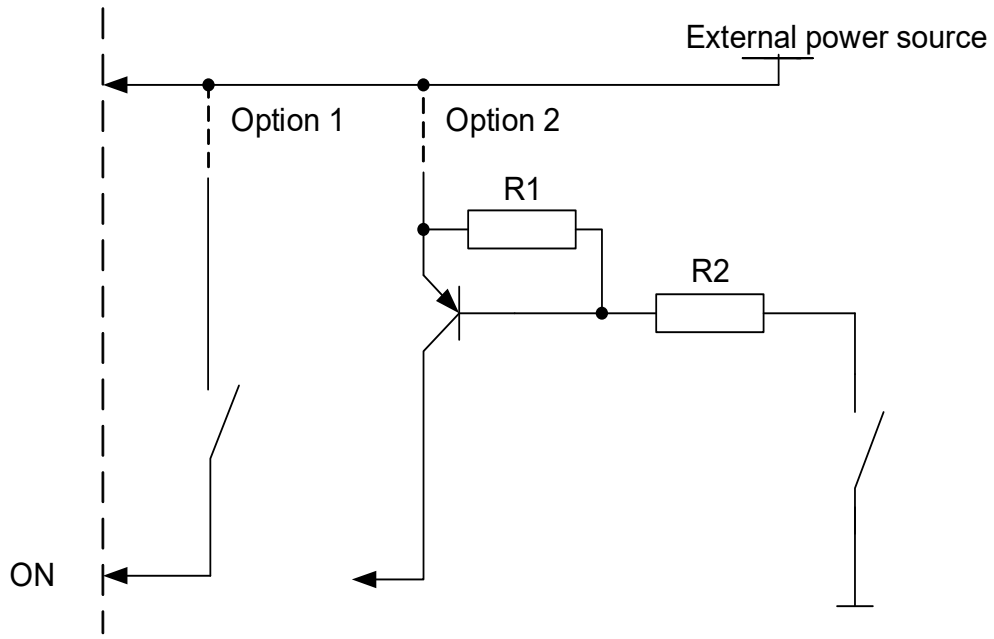

Figure 38: ON circuit options

The recommended external power source is 1.3~4.5V, with Option 2 the typical resistor values are: R1 = 150k and R2 = 3k. But the resistor values depend on the current gain from the employed PNP resistor.

Please note that the ON signal is an edge triggered signal. This implies that a micro-second high pulse on the signal line suffices to almost immediately switch on the module, as shown in Figure 39. After module startup the ON signal should always be set to low to prevent possible back powering at this pad.[4]

4. Please take due discretion when designing the filtering circuit, especially ESD, which may cause unintended switch on.

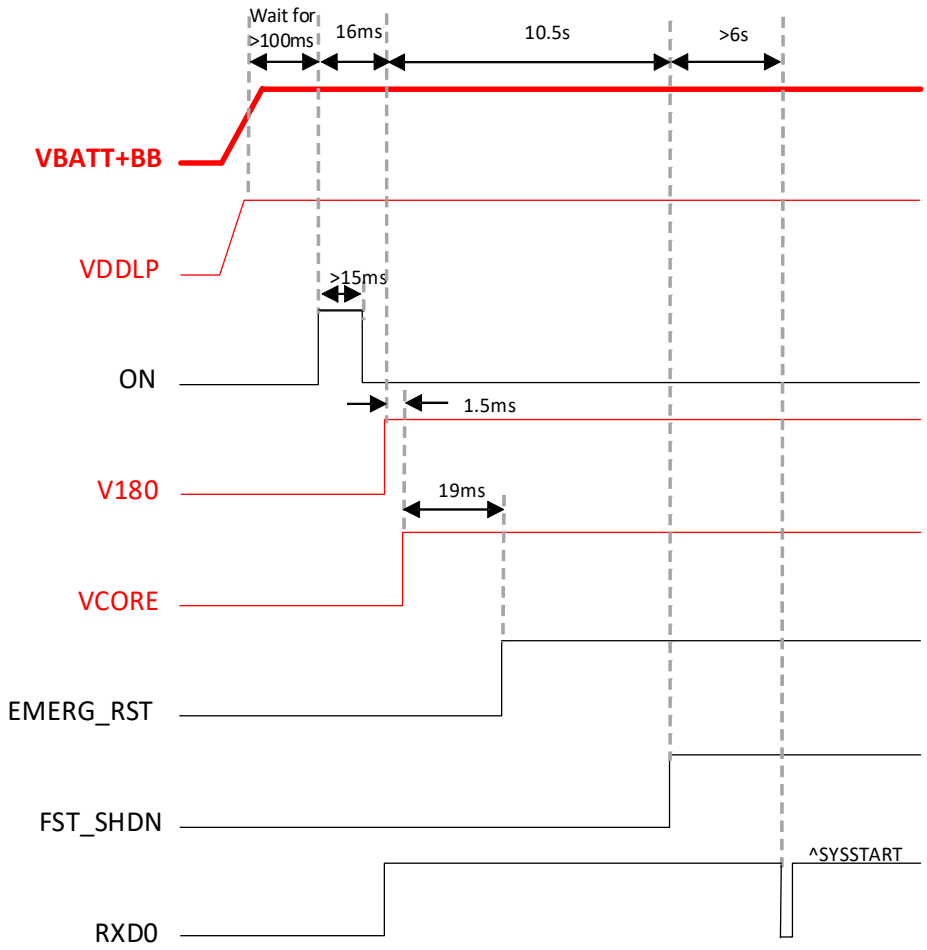

Figure 39: ON timing

4.2.1.3 Automatic Power On

When an automatic power on function is required for an external module application, it is recommended to add a circuit as shown in Figure 40.

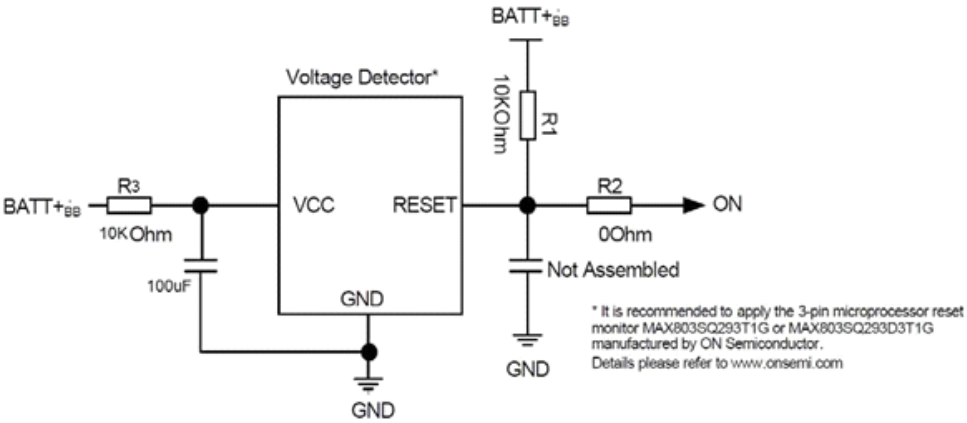

Figure 40: Automatic ON circuit

4.2.2 Restart ELS62

After startup, ELS62 can be restarted as described in the following sections:

- Software controlled reset by AT+CFUN command: Starts Normal mode (see Section 4.2.2.1).
- Hardware controlled reset by EMERG_RST line: Starts Normal mode (see Section 4.2.2.2).

4.2.2.1 Restart ELS62 via AT+CFUN Command

To reset and restart the ELS62 module, in Normal Mode, use the command AT+CFUN=1,1. See [1] for details.

4.2.2.2 Restart ELS62 Using EMERG_RST

The EMERG_RST signal is internally connected to the baseband processor. A low level for more than 10ms sets the processor, and all the other signal pads, to their respective reset state. If the EMERG_RST signal is pulled to GND, the module state remains unchanged and will not to startup. The reset state is described in Section 4.2.3 as well as in the figures showing the startup behavior of an interface.

After releasing the EMERG_RST line, i.e., with a change of the signal level from low to high, the module restarts. The other signals continue from their reset state as if the module was switched on by the ON signal.

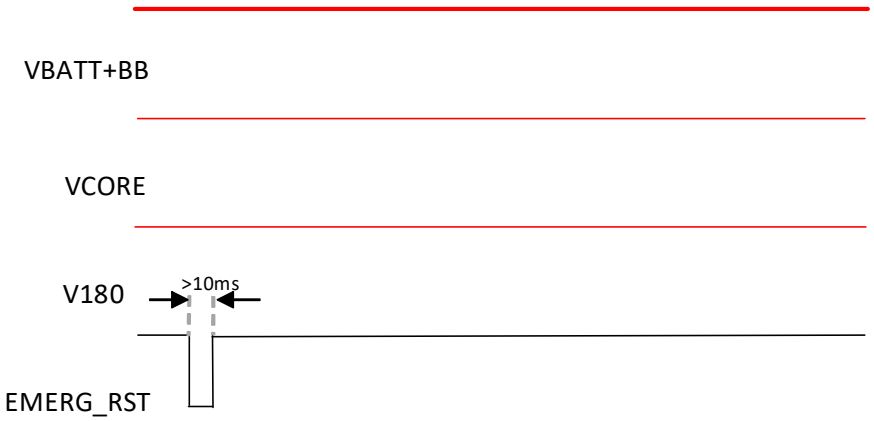

Figure 41: Emergency reset timing

It is recommended to control this EMERG_RST line with an open collector transistor or an open drain field-effect transistor.

Warning: Use the EMERG_RST line only when, due to serious problems, the software is not responding for more than 5 seconds. Pulling the EMERG_RST line causes the loss of all information stored in the volatile memory, and the information in non-volatile may not stored in a consistent way. Furthermore, the module may get damaged permanently under some unlikely circumstances. Therefore, this procedure is intended only for use in case of emergency, e.g. if ELS62 does not respond, if reset or shutdown via AT command fails.

4.2.3 Signal States after Startup

Table 16 lists the states each interface signal passes through during reset phase and the first firmware initialization. For further firmware startup initializations the values may differ because of different GPIO line configurations.

The reset state is reached with the falling edge of the EMERG_RST signal and keep it low.

The firmware initialization begins after a normal startup (see Section 4.2.1.2) or a change of the EMERG_RST signal level from low to high (see Section 4.2.2.2). The firmware initialization is completed as soon as the ASC0 interface lines CTS0 and DSR0 as well as the ASC1 interface line CTS1 have turned low (see Section 3.1.4 and Section 3.1.5). Now, the module is ready to receive and transmit data.

Table 16: Signal states

Signal name	Reset state	First startup configuration
RXD0	PU	O/H
TXD0	PU	PU
RTS0	PU	PU
CTS0	PU	O/L
GPIO5/LED	PD	O/L
GPIO3/DSR0	PD	O/L
GPIO2/DCD0	PU	O/H
GPIO1/DTR0	PD	PU
GPIO24/RING0	PU	O/H
GPIO16/RXD1	PD	O/H
GPIO17/TXD1	PD	PU
GPIO18/RTS1	PD	PU
GPIO19/CTS1	PU	O/L
GPIO6	PD	PD
GPIO7	O/L	PD
GPIO8/SIMSWITCH	PD	PD
GPIO11-12	PD	PD
GPIO13/MCLK	PD	PD
GPIO20/DOUT	PD	O/L
GPIO22/FSC	PD	PD
GPIO21/DIN	PD	PD
GPIO23/BCLK	PD	PD
FST_SHDN	PD	I/PU

Abbreviations used in above Table 16:

L = Low level H = High level L/H = Low or High level T = Tristate	I = Input O = Output OD = Open Drain PD = Pull down PU = Pull up

4.2.4 Turn off ELS62

To switch the module off the following procedures may be used:

- *Software controlled shutdown procedure*: Software controlled by sending an AT command over the serial application interface. See Section 4.2.4.1.
- *Hardware controlled shutdown procedure*: Hardware controlled by setting the FST_SHDN line to low. See Section 3.1.10.4
- *Automatic shutdown (software controlled)*: See Section 4.2.5

  Takes effect if ELS62 board temperature or voltage levels exceed a critical limit.

4.2.4.1 Switch off ELS62 Using AT Command

The best and safest approach to powering down ELS62 is to issue the appropriate AT command. This procedure lets ELS62 log off from the network and allows the software to enter into a secure state and safe data before disconnecting the power supply. The mode is referred to as Power Down mode. In this mode, only the RTC stays active. After sending the switch off command AT^SMSO, be sure not to enter any further AT commands until the module was restarted.

Warning: Be sure not to disconnect the operating voltage V_{BATT+} before V180 pad has gone low. Otherwise you run the risk of losing data, or in some rare cases even to render the module inoperable.

To monitor the V180 line, it is recommended to implement a power indication circuit as described in Section 3.1.10.2.

While ELS62 is in Power Down mode the application interface is switched off and must not be fed from any other voltage source. **Therefore, your application must be designed to avoid any current flow into any digital pads of the application interface.**

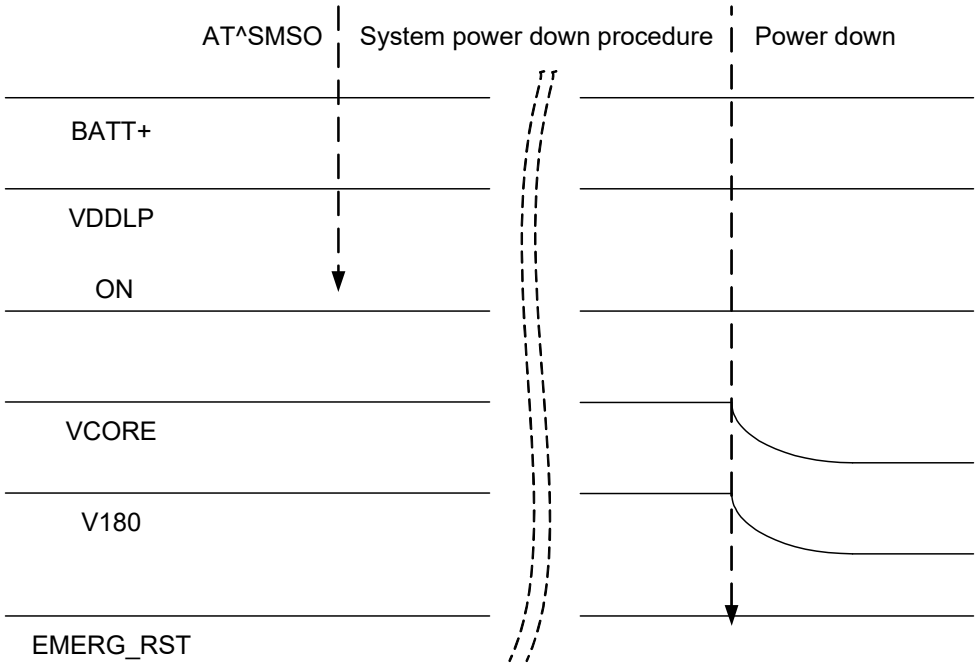

Figure 42: **Switch off behavior**

4.2.5 Automatic Shutdown

Automatic shutdown takes effect if the following event occurs:

- ELS62 board is exceeding the critical limits of overtemperature or undertemperature (see Section 4.2.5.1)
- Undervoltage or overvoltage is detected (see Section 4.2.5.2 and Section 4.2.5.3)

The automatic shutdown procedure is equivalent to the power-down initiated with an AT command, i.e. ELS62 logs off from the network and the software enters a secure state avoiding loss of data.

4.2.5.1 Thermal Shutdown

Each time the board temperature goes out of range (-20°C to +85°C) or back to normal, ELS62 instantly displays an alert (if enabled).

- URCs indicating the level "1" or "-1" allow the user to take appropriate precautions, such as protecting the module from exposure to extreme conditions. The presentation of the URCs depends on the settings selected with the AT^SCTM write command (for details see [1]):
  - AT^SCTM=1: Presentation of URCs is always enabled.
  - AT^SCTM=0 (default): Presentation of URCs is enabled during the 2 minute guard period after start-up of ELS62. After expiry of the 2 minute guard period, the presentation of URCs will be disabled, i.e. no URCs with alert levels "1" or "-1" will be generated.
- URCs indicating the level "2" or "-2" are instantly followed by an orderly shutdown. The presentation of these URCs is always enabled, i.e. they will be output even though the factory setting AT^SCTM=0 is never changed.

The maximum temperature ratings are stated in Section 4.5. Refer to Table 17 for the associated URCs.

Table 17: Temperature dependent behavior

Sending temperature alert (2min after ELS62 start-up, otherwise only if URC presentation enabled)	
^SCTM_B: 1	Board close to overtemperature limit.
^SCTM_B: -1	Board close to undertemperature limit.
^SCTM_B: 0	Board back to non-critical temperature range.
Automatic shutdown (URC appears no matter whether or not presentation was enabled)	
^SCTM_B: 2	Alert: Board equal or beyond overtemperature limit. ELS62 switches off.
^SCTM_B: -2	Alert: Board equal or below undertemperature limit. ELS62 switches off.

4.2.5.2 Undervoltage Shutdown

The undervoltage shutdown threshold is the specified minimum supply voltage V_{BATT+} given in Table 4. When the average supply voltage measured by ELS62 approaches the undervoltage shutdown threshold (i.e., 0.05V offset) the module will send the following URC:

```
^SBC: Undervoltage Warning
```

When the voltage drops to <3.2V, the undervoltage warning is sent only once - until the next time the module is close to the undervoltage shutdown threshold.

If the voltage continues to drop to ≤3.0V, the module will send the following URC:

```
^SBC: Undervoltage Shutdown
```

This alert is sent only once before the module shuts down cleanly without sending any further messages.

This type of URC does not need to be activated by the user. It will be output automatically when fault conditions occur.

Note: For battery powered applications it is strongly recommended to implement a BATT+ connecting circuit as described in Section 4.2.1.1 in order to not only be able save power, but also to restart the module after an undervoltage shutdown where the battery is deeply discharged. Also note that the undervoltage threshold is calculated for max. 200mV voltage drops during transmit burst. Power supply sources for external applications should be designed to tolerate 200mV voltage drops without crossing the lower limit of 3.0V. For external applications operating at the limit of the allowed tolerance the default undervoltage threshold may be adapted by subtracting an offset. For details see [1]: `AT^SCFG= "ME-Shutdown/sVsup/threshold".`

The typical undervoltage lockout voltage is 2.9V, specified within the normal temperature range. If the module is supplied by <2.9V, the module will have an undervoltage lockout which results in an ungraceful shutdown. This is not recommended! Telit Cinterion recommends that customers shall implement fast shutdown.

4.2.5.3 Overvoltage Shutdown

The overvoltage shutdown threshold is the specified maximum supply voltage V_{BATT+} given in Table 4. When the average supply voltage measured by ELS62 approaches the overvoltage shutdown threshold (i.e., 0.05V offset) the module will send the following URC:

```
^SBC: Overvoltage Warning
```

When the voltage rises to >4.5V, the overvoltage warning is sent only once - until the next time the module is close to the overvoltage shutdown threshold.

If the voltage continues to rise to ≥4.7V, the module will send the following URC:

```
^SBC: Overvoltage Shutdown
```

This alert is sent only once before the module shuts down cleanly without sending any further messages.

This type of URC does not need to be activated by the user. It will be output automatically when fault conditions occur.

Keep in mind that several ELS62 components are directly linked to BATT+ and, therefore, the supply voltage remains applied at major parts of ELS62. Especially the power amplifier linked to $BATT+_{RF}$ is very sensitive to high voltage and might even be destroyed.

4.3 Power Saving

ELS62 can be configured in two ways to control power consumption:

- Using the AT command AT^SPOW it is possible to specify a so-called power saving mode for the module (<mode> = 2; for details on the command see [1]). The module's UART interfaces (ASC0 and ASC1) are then deactivated and will only periodically be activated to be able to listen to network paging messages as described in Section 4.3.1, Section and Section 4.3.2. See Section 4.3.3 for a description on how to immediately wake up ELS62 again using RTS0.

  Please note that the AT^SPOW setting has no effect on the USB interface. As long as the USB connection is active, the module will not change into its SLEEP state to reduce its functionality to a minimum and thus minimizing its current consumption. To enable switching into SLEEP mode, the USB connection must therefore either not be present at all or the USB host must bring its USB interface into Suspend state. Also, VUSB should always be kept enabled for this functionality. See "Universal Serial Bus Specification Revision 2.0"[5] for a description of the Suspend state.

- Using the AT command AT^SCFG="Radio/OutputPowerReduction" it is possible for the module in GPRS and EGPRS multislot scenarios to reduce its output power according to 3GPP 45.005 section. By default a maximum power reduction is enabled. For details on the command see [1].

5. The specification is ready for download on http://www.usb.org/developers/docs/

4.3.1 Power Saving while Attached to GSM Networks

The power saving possibilities while attached to a GSM network depend on the paging timing cycle of the base station. The duration of a power saving interval can be calculated using the following formula:

```
t = 4.615 ms (TDMA frame duration) * 51 (number of frames) * DRX
value.
```

DRX (Discontinuous Reception) is a value from 2 to 9, resulting in paging intervals between 0.47 and 2.12 seconds. The DRX value of the base station is assigned by the GSM network operator.

In the pauses between listening to paging messages, the module resumes power saving, as shown in Figure 43.

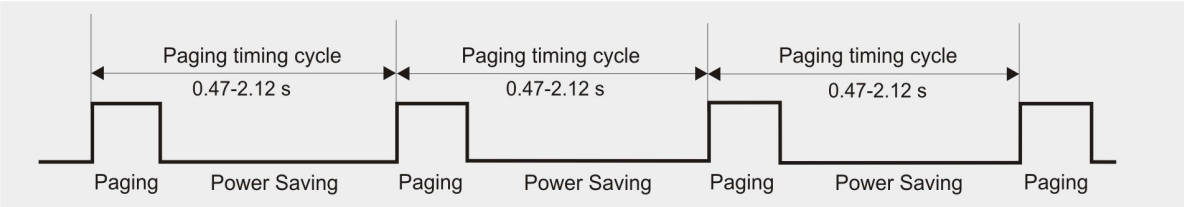

Figure 43: Power saving and paging in GSM networks

The varying pauses explain the different potential for power saving. The longer the pause the less power is consumed.

Generally, power saving depends on the module's application scenario and may differ from the above mentioned normal operation. The power saving interval may be shorter than 0.47 seconds or longer than 2.12 seconds.

4.3.2 Power Saving while Attached to LTE Networks

The power saving possibilities while attached to an LTE network depend on the paging timing cycle of the base station.

During normal LTE operation, i.e., the module is connected to an LTE network, the duration of a power saving period varies. It may be calculated using the following formula:

```
t = DRX Cycle Value * 10 ms
```

DRX cycle value in LTE networks is any of the four values: 32, 64, 128 and 256, thus resulting in power saving intervals between 0.32 and 2.56 seconds. The DRX cycle value of the base station is assigned by the LTE network operator.

In the pauses between listening to paging messages, the module resumes power saving, as shown in Figure 44.

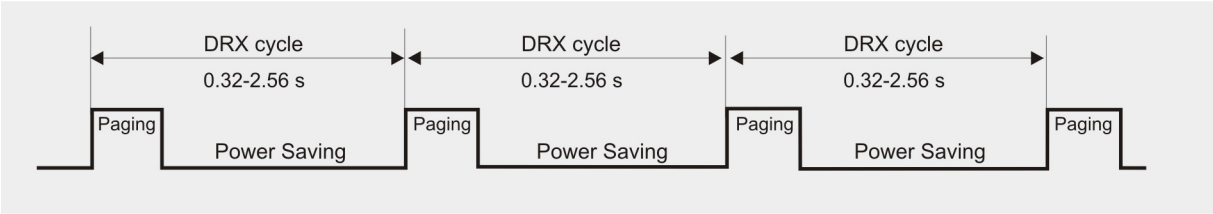

Figure 44: Power saving and paging in LTE networks

The varying pauses explain the different potential for power saving. The longer the pause the less power is consumed.

Generally, power saving depends on the module's application scenario and may differ from the above mentioned normal operation. The power saving interval may be shorter than 0.32 seconds or longer than 2.56 seconds.

4.3.3 Wake-up via RTS0

RTS0 can be used to wake up ELS62 from SLEEP mode configured with AT^SPOW. Assertion of RTS0 (i.e., toggle from inactive high to active low) serves as wake up event, thus allowing an external application to almost immediately terminate power saving. After RTS0 assertion, the CTS0 line signals module wake up, i.e., readiness of the AT command interface. It is therefore recommended to enable RTS/CTS flow control (default setting).

Figure 45 shows the described RTS0 wake up mechanism.

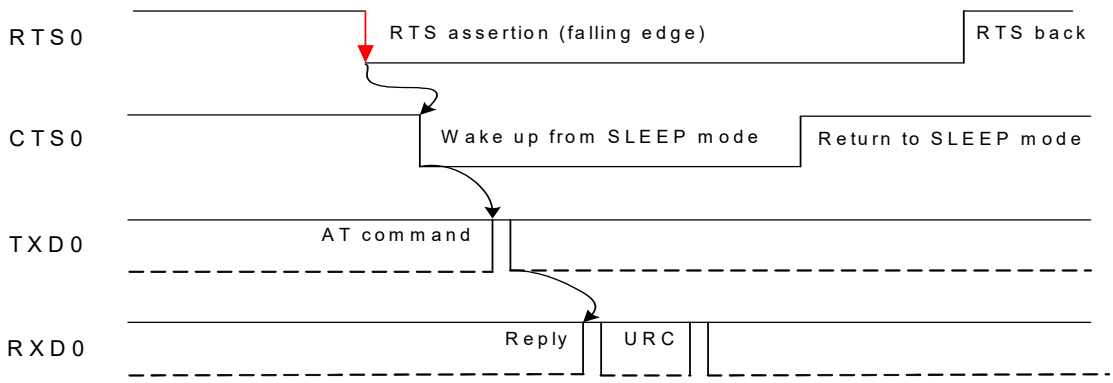

Figure 45: Wake-up via RTS0

4.4 Power Supply

ELS62 needs to be connected to a power supply at the SMT application interface - 2 lines BATT+, and GND. There are two separate voltage domains for BATT+:

- $BATT+_{BB}$ with a line mainly for the baseband power supply.
- $BATT+_{RF}$ with a line for the GSM/LTE power amplifier supply.

Please note that throughout the document, BATT+ refers to both voltage domains and power supply lines - $BATT+_{BB}$ and $BATT+_{RF}$.

The power supply of ELS62 has to be a single voltage source at $BATT+_{BB}$ and $BATT+_{RF}$. It must be able to provide the peak current during the uplink transmission.

All the key functions for supplying power to the device are handled by the power management section of the analog controller. This IC provides the following features:

- Stabilizes the supply voltages for the baseband using low drop linear voltage regulators and a DC-DC step down switching regulator.
- Switches the module's power voltages for the power-up and -down procedures.
- SIM switch to provide SIM power supply.

4.4.1 Power Supply Ratings

Table 18 and Table 19 assemble various voltage supply and current consumption ratings of the module.

Table 18: Voltage supply ratings

	Description	Conditions	Min	Typ	Max	Unit
BATT+	Supply voltage[1]	Directly measured at Module. Voltage must stay within the min/max values, including voltage drop, ripple, spikes.	3.0	3.8	4.5	V
	Maximum allowed voltage drop during transmit burst	Normal condition, power control level for Pout max			400	mV
	Voltage ripple	Normal condition, power control level for Pout max @ f <= 250 kHz @ f > 250 kHz			 120 90	 mV_{pp} mV_{pp}

1. Normal operation range is 3.2V to 4.5V, extended operation range is 3.0V to 3.2V. Within the extended voltage range, the specified electrical characteristics may be increased or decreased.

Table 19: **Current consumption ratings**[1]

	Description	Conditions		Typical rating	Unit
I_{BATT+}[2] (i.e., sum of $BATT+_{BB}$ and $BATT+_{RF}$)	OFF State supply current	Power Down		29.034	µA
	GSM SLEEP State supply current	SLEEP[3] @ DRX=9 (UART deactivated)	USB disconnected	1.736	mA
			USB suspended	1.737	mA
		SLEEP @ DRX=5 (UART deactivated)	USB disconnected	1.836	mA
			USB suspended	1.845	mA
		SLEEP @ DRX=2 (UART deactivated)	USB disconnected	2.192	mA
			USB suspended	2.198	mA
	GSM IDLE State supply current	IDLE[4] @ DRX=2 (UART activated, but no communication)	USB disconnected	17.060	mA
			USB active	25.301	mA
	Average GSM850 supply current[5]	GPRS Data transfer GSM850; PCL=5; 1Tx/4Rx	ROPR=4 (max. reduction)	248	mA
			ROPR=0 (no reduction)	247	mA
		GPRS Data transfer GSM850; PCL=5; 2Tx/3Rx	ROPR=4 (max. reduction)	373	mA
			ROPR=0 (no reduction)	438	mA
		GPRS Data transfer GSM850; PCL=5; 4Tx/1Rx	ROPR=4 (max. reduction)	467	mA
			ROPR=0 (no reduction)	790	mA
		EDGE Data transfer GSM850; PCL=5; 1Tx/4Rx	ROPR=4 (max. reduction)	158	mA
			ROPR=0 (no reduction)	158	mA
		EDGE Data transfer GSM850; PCL=5; 2Tx/3Rx	ROPR=4 (max. reduction)	232	mA
			ROPR=0 (no reduction)	262	mA
		EDGE Data transfer GSM850; PCL=5; 4Tx/1Rx	ROPR=4 (max. reduction)	316	mA
			ROPR=0 (no reduction)	460	mA

Table 19: **Current consumption ratings**[1]

	Description	Conditions		Typical rating	Unit
I_{BATT+}[2] (i.e., sum of $BATT+_{BB}$ and $BATT+_{RF}$)	Average GSM900 supply current[5]	GPRS Data transfer GSM900; PCL=5; 1Tx/4Rx	ROPR=4 (max. reduction)	242	mA
			ROPR=0 (no reduction)	243	mA
		GPRS Data transfer GSM900; PCL=5; 2Tx/3Rx	ROPR=4 (max. reduction)	365	mA
			ROPR=0 (no reduction)	429	mA
		GPRS Data transfer GSM900; PCL=5; 4Tx/1Rx	ROPR=4 (max. reduction)	460	mA
			ROPR=0 (no reduction)	780	mA
		EDGE Data transfer GSM900 PCL=5; 1Tx/4Rx	ROPR=4 (max. reduction)	151	mA
			ROPR=0 (no reduction)	153	mA
		EDGE Data transfer GSM900; PCL=5; 2Tx/3Rx	ROPR=4 (max. reduction)	225	mA
			ROPR=0 (no reduction)	251	mA
		EDGE Data transfer GSM900; PCL=5; 4Tx/1Rx	ROPR=4 (max. reduction)	314	mA
			ROPR=0 (no reduction)	440	mA
	Average GSM1800 supply current[5]	GPRS Data transfer GSM1800; PCL=0; 1Tx/4Rx	ROPR=4 (max. reduction)	152	mA
			ROPR=0 (no reduction)	152	mA
		GPRS Data transfer GSM1800; PCL=0; 2Tx/3Rx	ROPR=4 (max. reduction)	224	mA
			ROPR=0 (no reduction)	256	mA
		GPRS Data transfer GSM1800; PCL=0; 4Tx/1Rx	ROPR=4 (max. reduction)	289	mA
			ROPR=0 (no reduction)	455	mA
		EDGE Data transfer GSM1800 PCL=0; 1Tx/4Rx	ROPR=4 (max. reduction)	125	mA
			ROPR=0 (no reduction)	125	mA

Table 19: **Current consumption ratings**[1]

	Description	Conditions		Typical rating	Unit
		EDGE Data transfer GSM1800; PCL=0; 2Tx/3Rx	ROPR=4 (max. reduction)	194	mA
			ROPR=0 (no reduction)	203	mA
		EDGE Data transfer GSM1800; PCL=0; 4Tx/1Rx	ROPR=4 (max. reduction)	292	mA
			ROPR=0 (no reduction)	355	mA
	Average GSM1900 supply current[5]	GPRS Data transfer GSM1900; PCL=0; 1Tx/4Rx	ROPR=4 (max. reduction)	155	mA
			ROPR=0 (no reduction)	153	mA
		GPRS Data transfer GSM1900; PCL=0; 2Tx/3Rx	ROPR=4 (max. reduction)	224	mA
			ROPR=0 (no reduction)	260	mA
		GPRS Data transfer GSM1900; PCL=0; 4Tx/1Rx	ROPR=4 (max. reduction)	286	mA
			ROPR=0 (no reduction)	465	mA
		EDGE Data transfer GSM1900 PCL=0; 1Tx/4Rx	ROPR=4 (max. reduction)	130	mA
			ROPR=0 (no reduction)	129	mA
		EDGE Data transfer GSM1900; PCL=0; 2Tx/3Rx	ROPR=4 (max. reduction)	191	mA
			ROPR=0 (no reduction)	211	mA
		EDGE Data transfer GSM1900; PCL=0; 4Tx/1Rx	ROPR=4 (max. reduction)	297	mA
			ROPR=0 (no reduction)	370	mA
	Peak current Data transfer during GSM transmit burst[5]	GPRS Data transfer GSM850; PCL=5; 1Tx/1Rx @ 50Ω		2.51	A
		GPRS Data transfer GSM900; PCL=5; 1Tx/1Rx @ 50Ω		2.41	A
		GPRS Data transfer GSM1800; PCL=0; 1Tx/1Rx @ 50Ω		1.31	A
		GPRS Data transfer GSM1900; PCL=0; 1Tx/1Rx @ 50Ω		1.33	A

Table 19: **Current consumption ratings**[1]

	Description	Conditions		Typical rating	Unit
		GPRS Data transfer GSM850; PCL=5; 1Tx/1Rx @total mismatch		2.90	A
		GPRS Data transfer GSM900; PCL=5; 1Tx/1Rx @total mismatch		3.10	A
		GPRS Data transfer GSM1800; PCL=0; 1Tx/1Rx @total mismatch		1.55	A
		GPRS Data transfer GSM1900; PCL=0; 1Tx/1Rx @total mismatch		1.60	A
I_{BATT+} (i.e., sum of $BATT+_{BB}$ and $BATT+_{RF}$)	OFF State supply current	POWER DOWN		28.999	uA
	Average LTE supply current Data transfer @ maximum Pout	SLEEP @ "Paging Occasions" = 256 (UART deactivated)	USB disconnected	1.484	mA
			USB suspended	1.489	mA
		SLEEP @ "Paging Occasions" = 128 (UART deactivated)	USB disconnected	1.516	mA
			USB suspended	1.581	mA
		SLEEP @ "Paging Occasions" = 64 (UART deactivated)	USB disconnected	1.694	mA
			USB suspended	1.757	mA
		SLEEP @ "Paging Occasions" = 32 (UART deactivated)	USB disconnected	2.057	mA
			USB suspended	2.095	mA
		IDLE[4]	USB disconnected	16.565	mA
		IDLE[4]	USB active	24.821	mA
		LTE Data transfer Band 1 @max power[6]		632	mA
		LTE Data transfer Band 2 @max power[6]		595	mA
		LTE Data transfer Band 3 @max power[6]		623	mA
		LTE Data transfer Band 4 @max power[6]		602	mA
		LTE Data transfer Band 5 @max power[6]		549	mA
		LTE Data transfer Band 7 @max power[6]		738	mA
		LTE Data transfer Band 8 @max power[6]		601	mA
		LTE Data transfer Band 20 @max power[6]		557	mA
		LTE Data transfer Band 28 @max power[6]		571	mA
		LTE Data transfer Band 34 @max power[6]		300	mA
		LTE Data transfer Band 38 @max power[6]		286	mA
		LTE Data transfer Band 39 @max power[6]		271	mA
		LTE Data transfer Band 40 @max power[6]		286	mA

Table 19: **Current consumption ratings**[1]

	Description	Conditions	Typical rating	Unit
		LTE Data transfer Band 41 @max power[6]	284	mA
		LTE Data transfer Band 66 @max power[6]	605	mA

1. **Note:** Current consumption ratings are based on measurements done in a laboratory test environment and deviations may occur from the given typical rating. Under real life conditions however, with e.g., varying network quality, location changes, or changing supply currents, the deviation from these typical ratings may be even bigger, and will have to be taken into account for actual power supply solutions. For more details on power supply design see [5].
2. With an impedance of Z_{LOAD}=50Ω at the antenna pad.Measured at 25°C and 3.8V.
3. Measurements start 6 minutes after switching ON the module;
Averaging times: SLEEP mode - 3 minutes, transfer modes - 1.5 minutes
Communication tester settings: No neighbor cells, no cell re-selection etc., RMC (reference measurement channel). Note that SLEEP mode is enabled via AT Command AT^SPOW=2,1000,3
4. The power save mode is disabled via AT command AT^SPOW=1,0,0
5. Communication tester setting: Channel: Middle Channel
6. Communication tester settings:
   Channel Bandwidth: 5MHz
   Channel: Middle Channel
   Number of Resource Blocks: 25 (DL), 1 (UL), RB position: Low
   Modulation: QPSK

4.4.2 Minimizing Power Losses

When designing the power supply for your application please pay specific attention to power losses. Ensure that the input voltage V_{BATT+} never drops below 3.0V on the ELS62 board, not even in a GSM transmit burst where current consumption can rise (for peak values see the power supply ratings listed in Section 4.4.1).

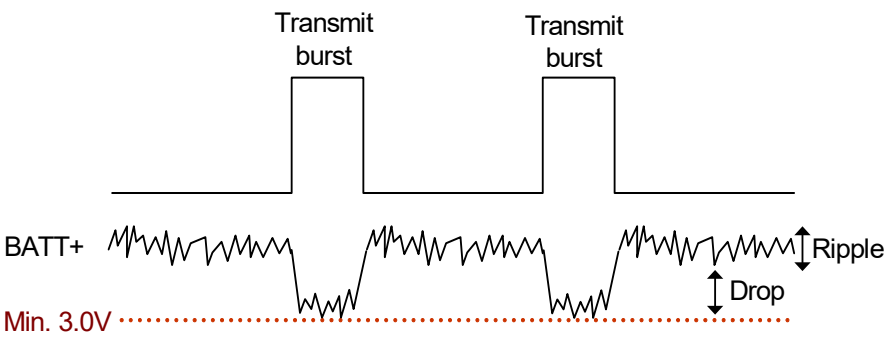

Figure 46: **Power supply limits during transmit burst**

4.4.3 Measuring the Supply Voltage (V_{BATT+})

To measure the supply voltage V_{BATT+} it is possible to define two reference points GND and BATT+. GND should be the module's shielding, while BATT+ should be a test pad on the external application the module is mounted on. The external BATT+ reference point has to be connected to and positioned close to the SMT application interface's BATT+ pads 53 ($BATT+_{RF}$) or 204 ($BATT+_{BB}$) as shown in Figure 47.

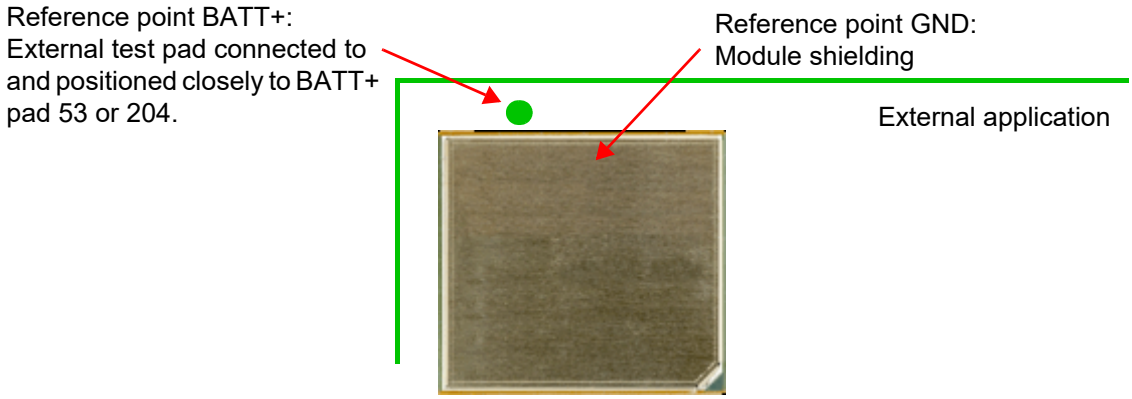

Figure 47: Position of reference points BATT+ and GND

4.4.4 Monitoring Power Supply by AT Command

To monitor the supply voltage you can also use the AT^SBV command which returns the value related to the reference points BATT+ and GND.

The module continuously measures the voltage at intervals depending on the operating mode of the RF interface. The duration of measuring ranges from 0.5 seconds in TALK/DATA mode to 50 seconds when ELS62 is in IDLE mode or Limited Service (deregistered). The displayed voltage (in mV) is averaged over the last measuring period before the AT^SBV command was executed.

If the measured voltage drops below or rises above the voltage shutdown thresholds, the module will send an "^SBC" URC and shut down (for details see Section 4.2.5).

4.5 Operating Temperatures

Please note that the module's lifetime, i.e., the MTTF (mean time to failure) may be reduced, if operated outside the extended temperature range.

Table 20: Board temperature

Parameter	Min	Typ	Max	Unit
Normal operation	-20	+25	+85	°C
Extended operation[1]	-20		+90	°C
Automatic shutdown[2] Temperature measured on ELS62 board	<-20		>+90	°C

1. Extended operation allows normal mode speech calls or data transmission for limited time until automatic thermal shutdown takes effect. Within the extended temperature range (outside the normal operating temperature range) the specified electrical characteristics may be increase or decreased.
2. The board temperature is corresponding to the measured chipset temperature.

See also Section 4.2.5 for information about the board temperature measurement, automatic thermal shutdown and alert messages.

Note: Within the specified operating temperature ranges the board temperature may vary to a great extent depending on operating mode, used frequency band, radio output power and current supply voltage.

For more information regarding the module's thermal behavior please refer to [1].

4.6 Electrostatic Discharge

The module is not protected against Electrostatic Discharge (ESD) in general. Consequently, it is subject to ESD handling precautions that typically apply to ESD sensitive components. Proper ESD handling and packaging procedures must be applied throughout the processing, handling and operation of any application that incorporates an ELS62 module.

An example for an enhanced ESD protection for the SIM interface is given in Section 2.1.6.1.

ELS62 has been tested according to group standard ETSI EN 301 489-1 (see Table 28) and test standard EN 61000-4-2. Electrostatic values can be gathered from the following table.

Table 21: Electrostatic values

Specification/Requirements	Contact discharge	Air discharge
ANSI/ESDA/JEDEC JS-001-2017 (Human Body Model)		
All LGA pads	±1.0kV (HBM)	n.a
JS-002-2018 (Charged Device Model)		
All LGA pads	±250V (CDM)	n.a
ETSI EN 301 489-1/7		
BATT+	±4kV	±8kV
Antenna pads	±4kV	±8kV

Note: The values may vary with the individual application design. For example, it matters whether or not the application platform is grounded over external devices like a computer or other equipment, such as the Telit Cinterion reference application described in Chapter 6.

4.7 Blocking against RF on Interface Lines

There are no general blocking measures at LGA pads on ELS62-W to the external application. In the EMERG_RST, and SIM interface lines are serial resistors, or capacitors to GND, implemented to reduce the EMI and ESD problems. All other signal lines have no EMI measures on the Module.

Exceptions:Supply voltages BATT+BB, BATT+RF, V180, VDDLP, CCVCC1 and CCVCC2 are decoupled with capacitors to GND.

The analogue audio lines are blocked with capacitors against EMI.

The main power supply from an external application has to be a single voltage source and has to be expanded to two sub paths (star structure). Each voltage domain must be decoupled by application with low ESR capacitors (>100µF MLCC X5R@ BATT+BB; >(100+47)µF MLCC X5R@ BATT+RF) as close as possible to LGA pads.

It could be possible to use EMI measures in the application with the module on some signal lines. The EMI measures are described below.

There are five combinations with electronic devices between module and application.

The maximum value of the serial resistor should be lower than 1k Ohm in the signal line. The maximum value of the capacitor should be lower than 50pF at the signal line. Please observe the electrical specification of the module interface and the application interface. Pay attention not to exceed the maximum input voltages and prevent voltage overshoots, which might occur if using inductive EMC measures.

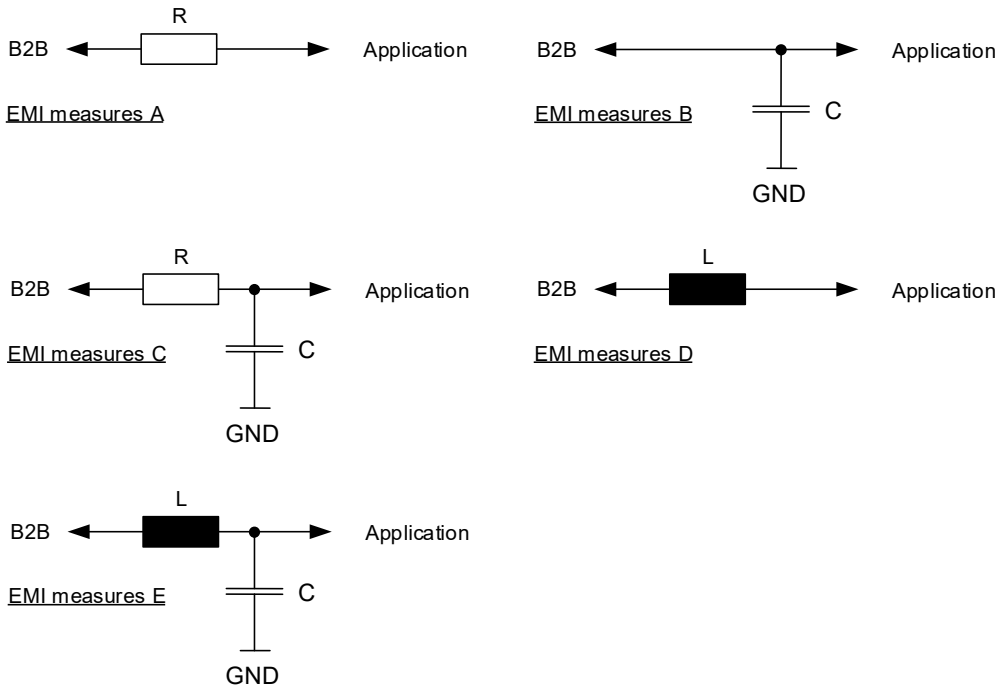

Figure 48: EMI circuits

The following table lists, for each signal line at the module's SMT application interface, the EMI measures that may be implemented.

Table 22: EMI measures on the application interface

Signal name	EMI measures					Remark
	A	B	C	D	E	
CCINx	x			x		
CCRSTx		x				The external capacitor should be not higher than 30pF. The value of the capacitor depends on the external application.
CCIOx		x				
CCCLKx		x				

Table 22: **EMI measures on the application interface**

Signal name	EMI measures					Remark
	A	B	C	D	E	
USB_DP						It is not allowed to use any external ESD or EMI components on the signal lines of this interface.
USB_DN						
RXD0	x	x	x	x	x	
TXD0	x	x	x	x	x	
CTS0	x	x	x	x	x	
RTS0	x	x	x	x	x	
GPIO1/DTR0	x	x	x	x	x	
GPIO2/DCD0	x	x	x	x	x	
GPIO3/DSR0	x	x	x	x	x	
FST_SHDN	x	x	x	x	x	
GPIO5/LED	x	x	x	x	x	
GPIO6	x	x	x	x	x	
GPIO7	x	x	x	x	x	
GPIO8/SIMSWITCH	x	x	x	x	x	
GPIO11-GPIO12	x	x	x	x	x	
GPIO13/MCLK						
GPIO16/RXD1	x	x	x	x	x	
GPIO17/TXD1	x	x	x	x	x	
GPIO18/RTS1	x	x	x	x	x	
GPIO19/CTS1	x	x	x	x	x	
GPIO20/DOUT	x	x	x	x	x	
GPIO21//DIN	x	x	x	x	x	
GPIO22/FSC	x	x	x	x	x	
GPIO23/BCLK	x	x	x	x	x	
GPIO24/RING0	x	x	x	x	x	
V180		x		x	x	
VDDLP		x		x	x	
$BATT+_{RF}$		x	x			Measures required if $BATT+_{RF}$ is close to internal RF antenna - e.g., 39pF blocking capacitor to ground
$BATT+_{BB}$		x	x			

4.8 Reliability Characteristics

The test conditions stated below are an extract of the complete test specifications.

Table 23: Summary of reliability test conditions

Type of test	Conditions	Standard
Vibration	Frequency range: 10-20Hz; acceleration: 5g Frequency range: 20-500Hz; acceleration: 15g Duration: 2h per axis; 3 axes	DIN IEC 60068-2-6[1]
Shock half-sinus	Acceleration: 500g Shock duration: 1ms 1 shock per axis 6 positions (± x, y and z)	DIN IEC 60068-2-27
Dry heat	Temperature: +70 ±2°C Test duration: 16h Humidity in the test chamber: < 50%	EN 60068-2-2 Bb ETS 300 019-2-7
Temperature change (shock)	Low temperature: -40°C ±2°C High temperature: +85°C ±2°C Changeover time: < 30s (dual chamber system) Test duration: 1h Number of repetitions: 100	DIN IEC 60068-2-14 Na ETS 300 019-2-7
Damp heat cyclic	High temperature: +55°C ±2°C Low temperature: +25°C ±2°C Humidity: 93% ±3% Number of repetitions: 6 Test duration: 12h + 12h	DIN IEC 60068-2-30 Db ETS 300 019-2-5
Cold (constant exposure)	Temperature: -40 ±2°C Test duration: 16h	DIN IEC 60068-2-1

1. For reliability tests in the frequency range 20-500Hz the Standard's acceleration reference value was increased to 15g.

5 Mechanical Dimensions, Mounting and Packaging

5.1 Mechanical Dimensions of ELS62

Figure 49 shows the top and bottom view of ELS62 and provides an overview of the board's mechanical dimensions. For further details see Figure 50.

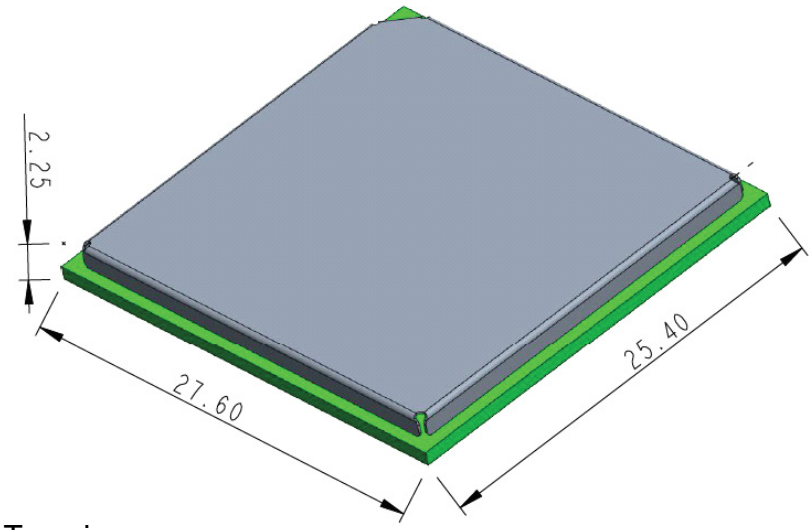

Top view

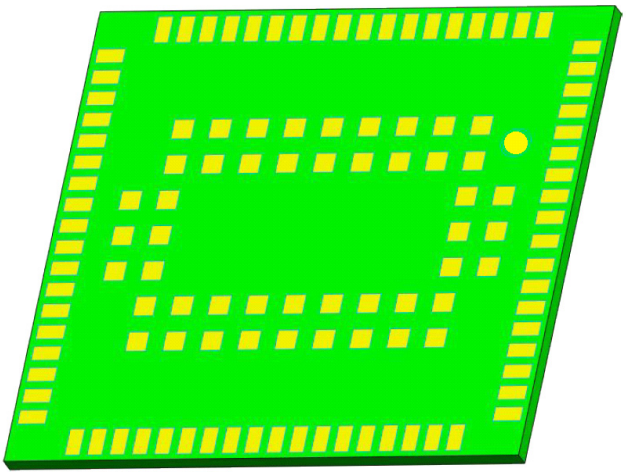

Bottom view

Figure 49: ELS62 – top and bottom views

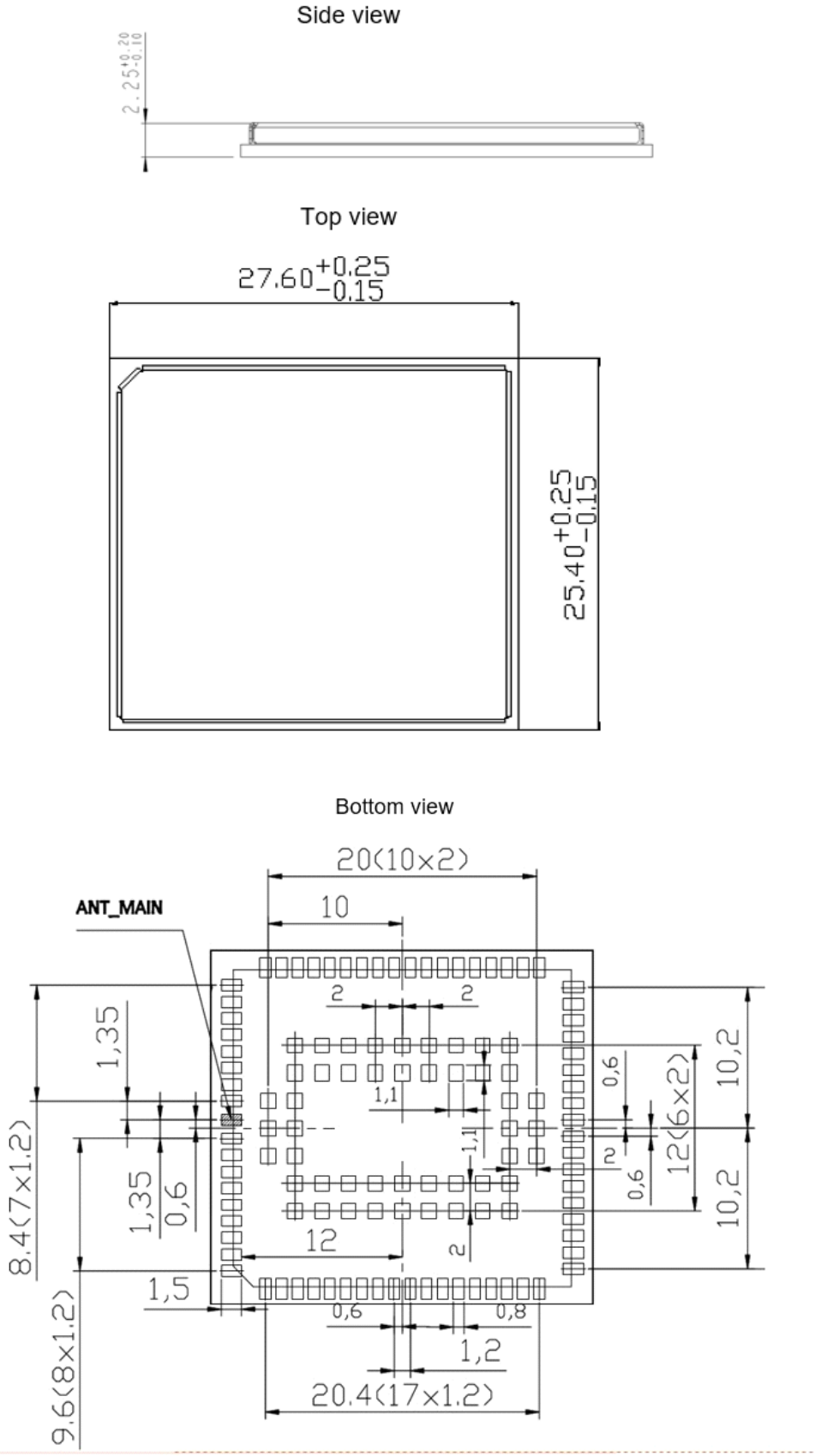

Figure 50: Dimensions of ELS62 (all dimensions in mm)

5.2 Mounting ELS62 onto the Application Platform

This section describes how to mount ELS62 onto the PCBs, including land pattern and stencil design, board-level characterization, soldering conditions, durability and mechanical handling. For more information on issues related to SMT module integration see also [5].

Note: To avoid short circuits between signal tracks on an external application's PCB and various markings at the bottom side of the module, it is recommended not to route the signal tracks on the top layer of an external PCB directly under the module, or at least to ensure that signal track routes are sufficiently covered with solder resist.

5.2.1 SMT PCB Assembly

5.2.1.1 Land Pattern and Stencil

The land pattern and stencil design as shown below is based on Telit Cinterion characterizations for lead-free solder paste on a four-layer test PCB and a respectively 110 µm and 150 µm thick stencil.

The land pattern given in Figure 51 reflects the module's pad layout, including signal pads and ground pads (for pad assignment see Section 3.1.1).

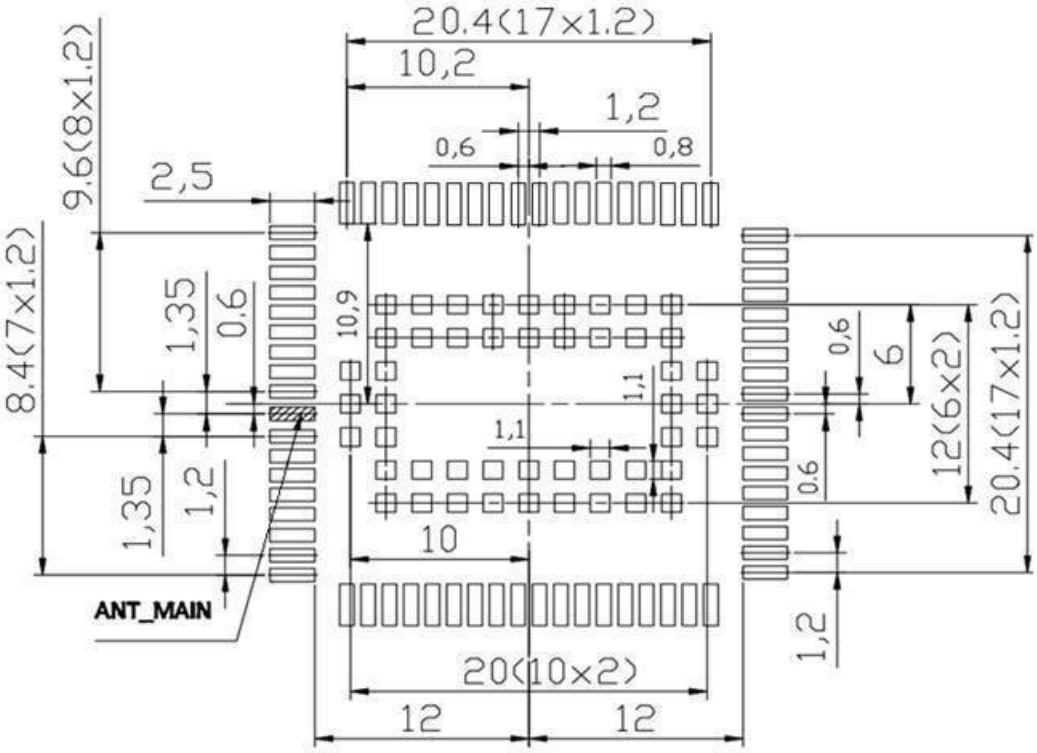

Figure 51: Land pattern (top view)

The stencil design illustrated in Figure 52 and Figure 53 is recommended by Telit Cinterion.

The central ground pads are primarily intended for stabilizing purposes, and may show some more voids than the application interface pads at the module's rim. This is acceptable, since they are electrically irrelevant.

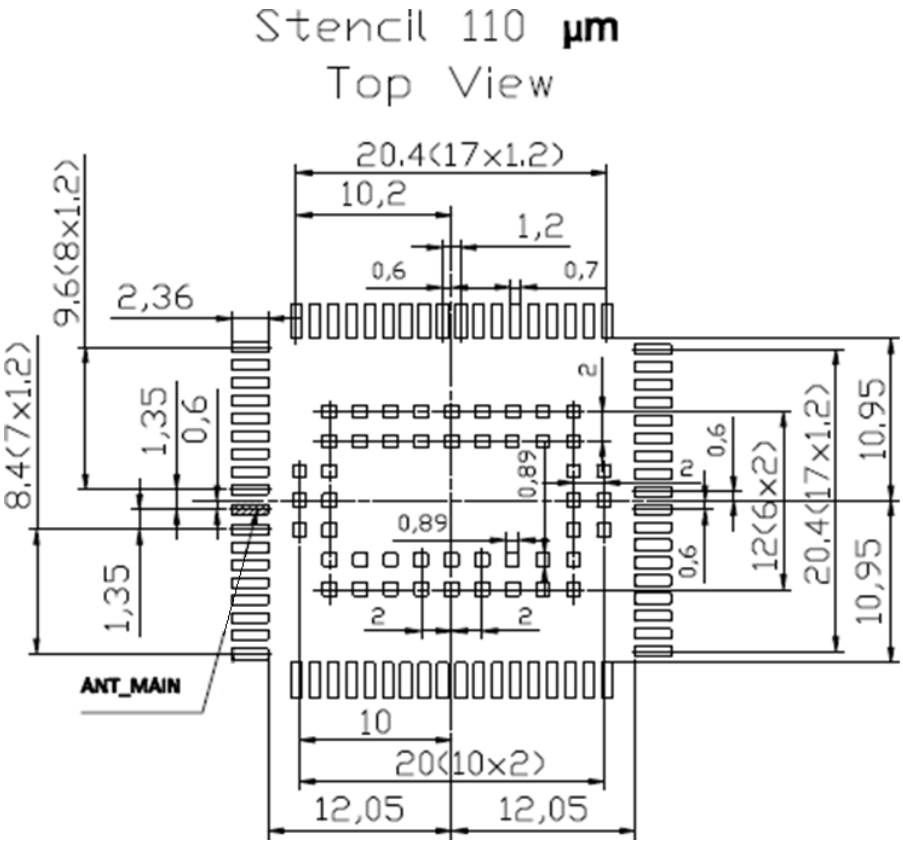

Figure 52: **Recommended design for 110µm thick stencil (top view)**

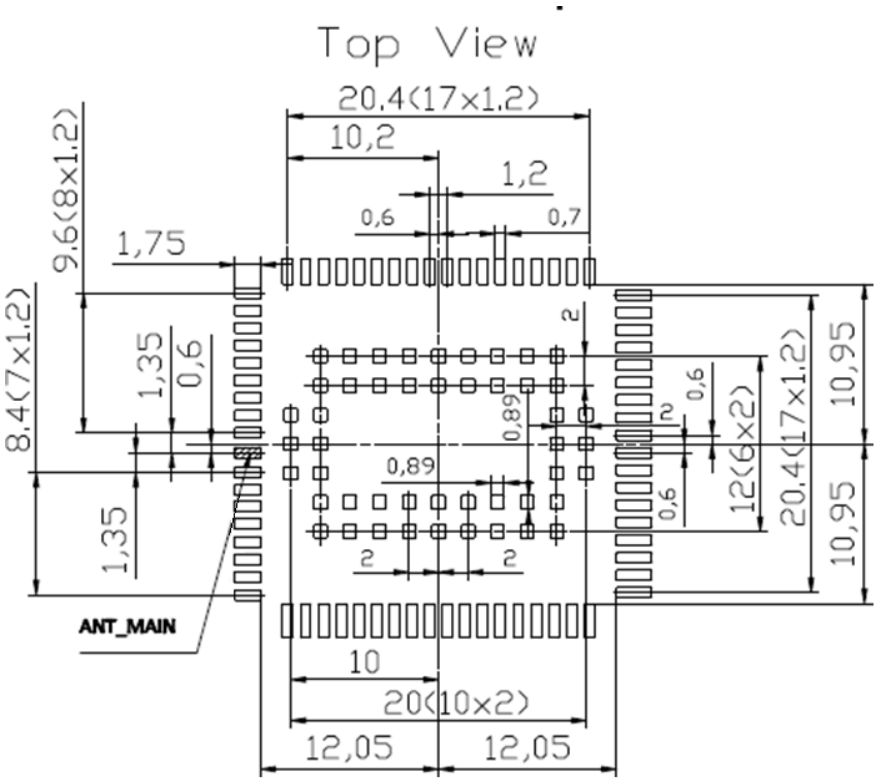

Figure 53: **Recommended design for 150µm thick stencil (top view)**

5.2.1.2 Board Level Characterization

Board level characterization issues should also be taken into account if devising an SMT process.

Characterization tests should attempt to optimize the SMT process with regard to board level reliability. This can be done by performing the following physical tests on sample boards: Peel test, bend test, tensile pull test, drop shock test and temperature cycling. Sample surface mount checks are described in [5].

It is recommended to characterize land patterns before an actual PCB production, taking individual processes, materials, equipment, stencil design, and reflow profile into account. For land and stencil pattern design recommendations see also Section 5.2.1.1. Optimizing the solder stencil pattern design and print process is necessary to ensure print uniformity, to decrease solder voids, and to increase board level reliability.

Generally, solder paste manufacturer recommendations for screen printing process parameters and reflow profile conditions should be followed. Maximum ratings are described in Section 5.2.3.

5.2.2 Moisture Sensitivity Level

ELS62 comprises components that are susceptible to damage induced by absorbed moisture.

The Telit Cinterion ELS62 module complies with the latest revision of the IPC/JEDEC J-STD-020 Standard for moisture sensitive surface mount devices and is classified as MSL 4.

For additional moisture sensitivity level (MSL) related information see Section 5.2.4 and Section 5.3.2.

5.2.3 Soldering Conditions and Temperature

5.2.3.1 Reflow Profile

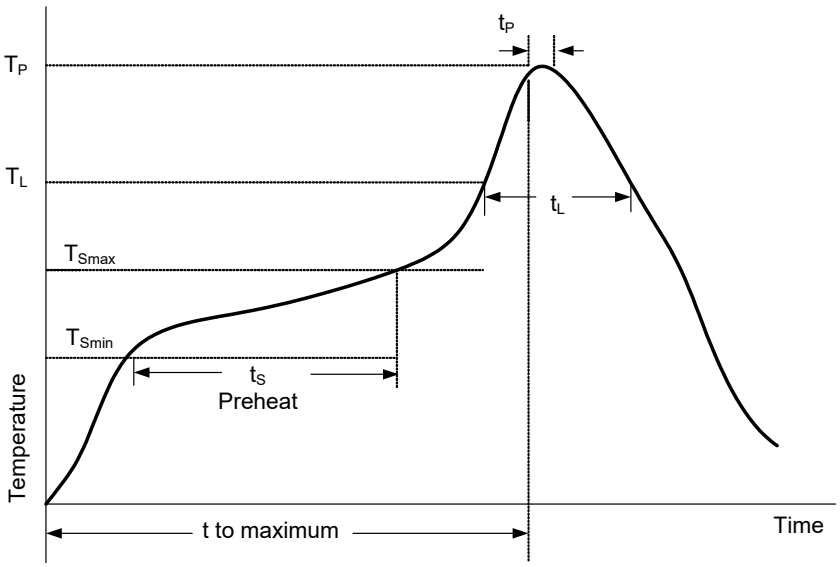

Figure 54: Reflow Profile

Table 24: **Reflow temperature ratings**[1]

Profile Feature	Pb-Free Assembly
Preheat & Soak Temperature Minimum (T_{Smin}) Temperature Maximum (T_{Smax}) Time (t_{Smin} to t_{Smax}) (t_S)	 150°C 200°C 60-120 seconds
Average ramp-up rate (T_L to T_P)	3K/second max. [2]
Liquidous temperature (T_L) Time at liquidous (t_L)	217°C 50-90 seconds
Peak package body temperature (T_P)	245°C +0/-5°C
Time (t_P) within 5 °C of the peak package body temperature (T_P)	30 seconds max.
Limited ramp-down rate (Tp - 200°C) Average ramp-down rate from 200°C	1.5-2.5K/second max. [2, 3] 3K/second max. [2]
Time 25°C to maximum temperature	8 minutes max.

1. Please note that the reflow profile features and ratings listed above are based on the joint industry standard IPC/JEDEC J-STD-020E, and are as such meant as a general guideline. For more information on reflow profiles and their optimization please refer to [5].
2. Temperatures measured on shielding at each corner.See also [5]

During critical ramp-down phase (Tp - 200°C) temperature differences between sensors 1,2,3,4 should be as low as possible..

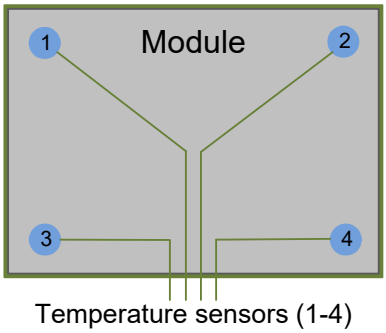

3. Lowest ramp-down rate achievable is also dependent on reflow oven type and settings used. Use the lowest possible ramp down rate from Tp - 200°C. See also [5]

5.2.3.2 Maximum Temperature and Duration

The following limits are recommended for the SMT board-level soldering process to attach the module:

- A maximum module temperature of 245°C. This specifies the temperature as measured at the module's top side.
- A maximum duration of 30 seconds at this temperature.

Please note that while the solder paste manufacturers' recommendations for best temperature and duration for solder reflow should generally be followed, the limits listed above must not be exceeded.

Warning: ELS62 is specified for one soldering cycle only. Once ELS62 is removed from the application, the module will very likely be destroyed and cannot be soldered onto another application.

5.2.4 Durability and Mechanical Handling

5.2.4.1 Storage Conditions

ELS62 modules, as delivered in tape and reel carriers, must be stored in sealed, moisture barrier anti-static bags. The conditions stated below are only valid for modules in their original packed state in weather protected, non-temperature-controlled storage locations. Normal storage time under these conditions is 12 months maximum.

Table 25: Storage conditions

Type	Condition	Unit	Reference
Air temperature: Low High	-25 +40	°C	IPC/JEDEC J-STD-033D
Humidity relative: Low High	10 90 at 40°C	%	IPC/JEDEC J-STD-033D
Air pressure: Low High	70 106	kPa	IEC TR 60271-3-1: 1K4 IEC TR 60271-3-1: 1K4
Movement of surrounding air	1.0	m/s	IEC TR 60271-3-1: 1K4
Water: rain, dripping, icing and frosting	Not allowed	---	---
Radiation: Solar Heat	1120 600	W/m²	ETS 300 019-2-1: T1.2, IEC 60068-2-2 Bb ETS 300 019-2-1: T1.2, IEC 60068-2-2 Bb
Chemically active substances	Not recommended		IEC TR 60271-3-1: 1C1L
Mechanically active substances	Not recommended		IEC TR 60271-3-1: 1S1
Vibration sinusoidal: Displacement Acceleration Frequency range	 1.5 5 2-9 9-200	 mm m/s² Hz	IEC TR 60271-3-1: 1M2
Shocks: Shock spectrum Duration Acceleration	 semi-sinusoidal 1 50	 ms m/s²	IEC 60068-2-27 Ea

5.2.4.2 Processing Life

ELS62 must be soldered to an application within 72 hours after opening the moisture barrier bag (MBB) it was stored in.

As specified in the IPC/JEDEC J-STD-033 Standard, the manufacturing site processing the modules should have ambient temperatures below 30°C and a relative humidity below 60%.

5.2.4.3 Baking

Baking conditions are specified on the moisture sensitivity label attached to each MBB (see Figure 60 for details):

- It is *not necessary* to bake ELS62, if the conditions specified in Section 5.2.4.1 and Section 5.2.4.2 were not exceeded.
- It is *necessary* to bake ELS62, if any condition specified in Section 5.2.4.1 and Section 5.2.4.2 was exceeded.

If baking is necessary, the modules must be put into trays that can be baked to at least 125°C. Devices should not be baked in tape and reel carriers at any temperature.

5.2.4.4 Electrostatic Discharge

Electrostatic discharge (ESD) may lead to irreversable damage for the module. It is therefore advisable to develop measures and methods to counter ESD and to use these to control the electrostatic environment at manufacturing sites.

Please refer to Section 4.6 for further information on electrostatic discharge.

5.3 Packaging

5.3.1 Tape and Reel

The single-feed tape carrier for ELS62 is illustrated in Figure 55. The figure also shows the proper part orientation. The tape width is 44mm and the ELS62 modules are placed on the tape with a 32-mm pitch. The reels are 330mm in diameter with a core diameter of 100mm. Each reel contains 500 modules.

5.3.1.1 Orientation

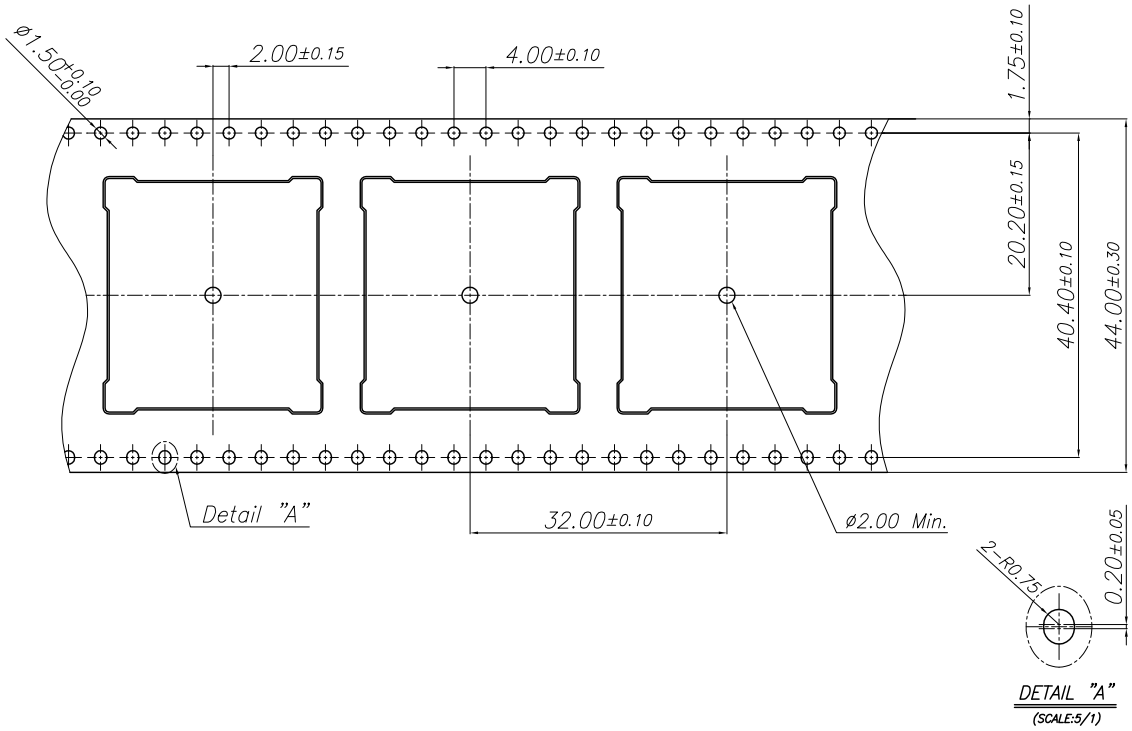

Figure 55: Carrier tape

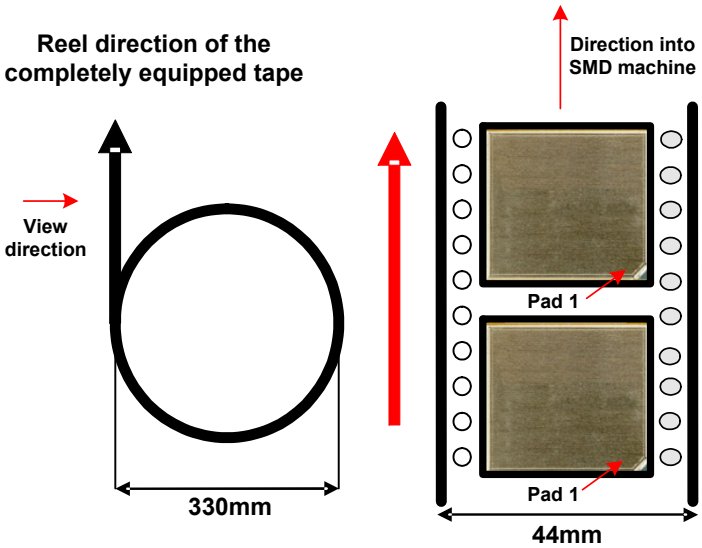

Figure 56: Reel direction

5.3.1.2 Barcode Label

A barcode label provides detailed information on the tape and its contents. It is attached to the reel.

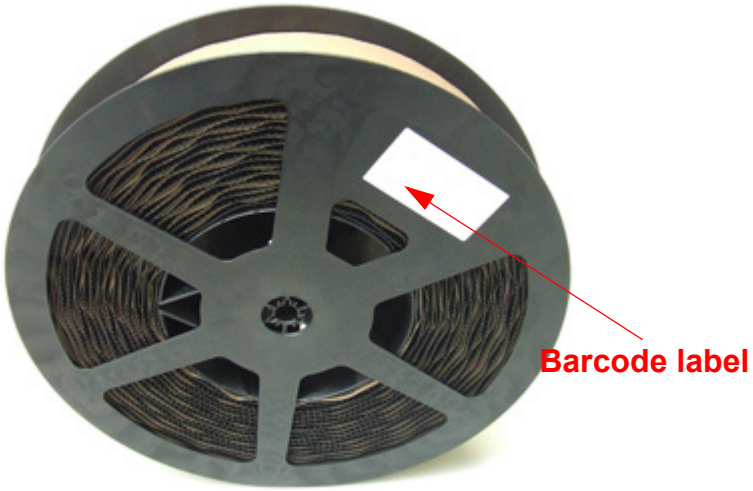

Figure 57: Barcode label on tape reel

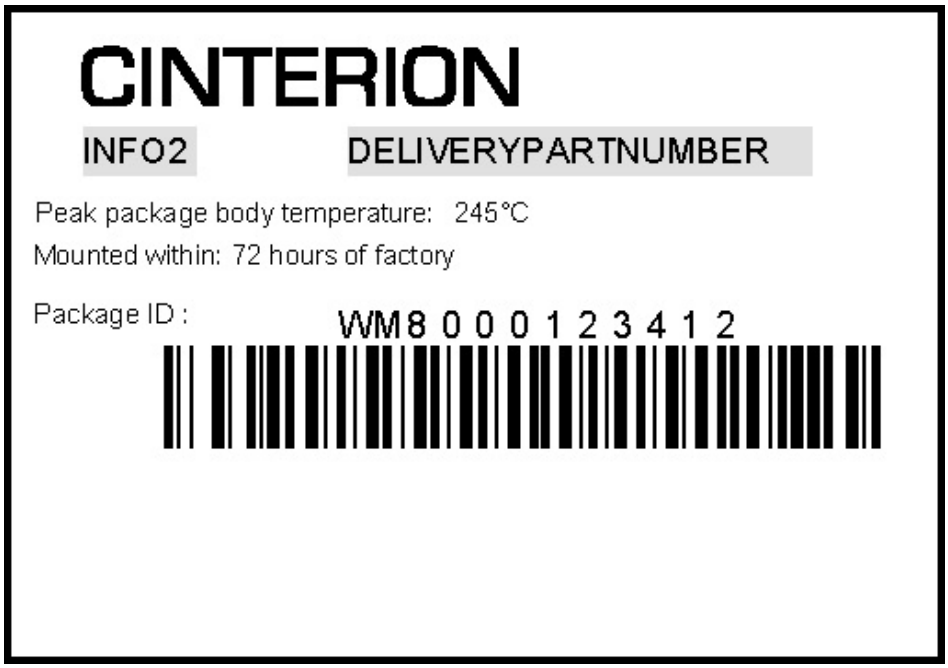

Figure 58: Barcode label on tape reel - layout

5.3.2 Shipping Materials

ELS62 is distributed in tape and reel carriers. The tape and reel carriers used to distribute ELS62 are packed as described below, including the following required shipping materials:

- Moisture barrier bag, including desiccant and humidity indicator card
- Transportation box

5.3.2.1 Moisture Barrier Bag

The tape reels are stored inside a moisture barrier bag (MBB), together with a humidity indicator card and desiccant pouches - see Figure 59. The bag is ESD protected and delimits moisture transmission. It is vacuum-sealed and should be handled carefully to avoid puncturing or tearing. The bag protects the ELS62 modules from moisture exposure. It should not be opened until the devices are ready to be soldered onto the application.

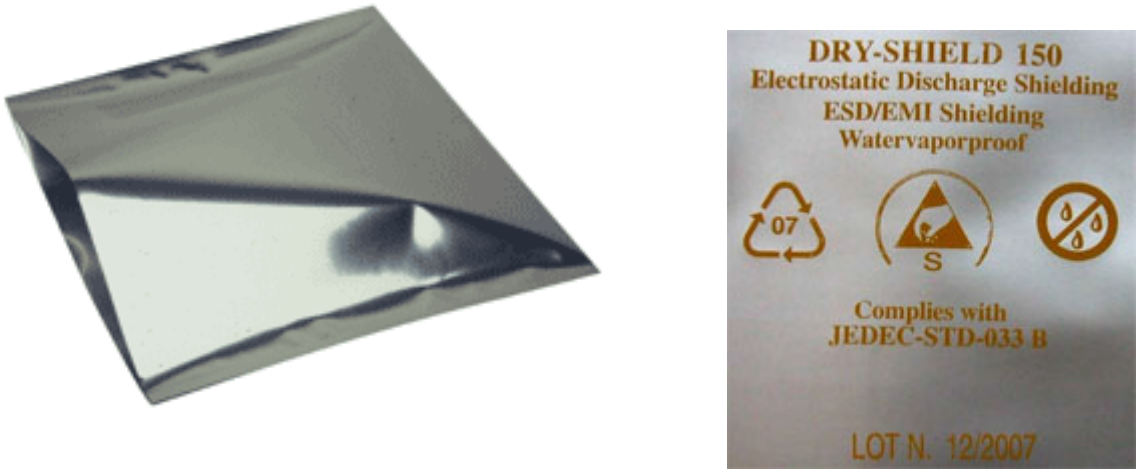

Figure 59: **Moisture barrier bag (MBB) with imprint**

The label shown in Figure 60 summarizes requirements regarding moisture sensitivity, including shelf life and baking requirements. It is attached to the outside of the moisture barrier bag.

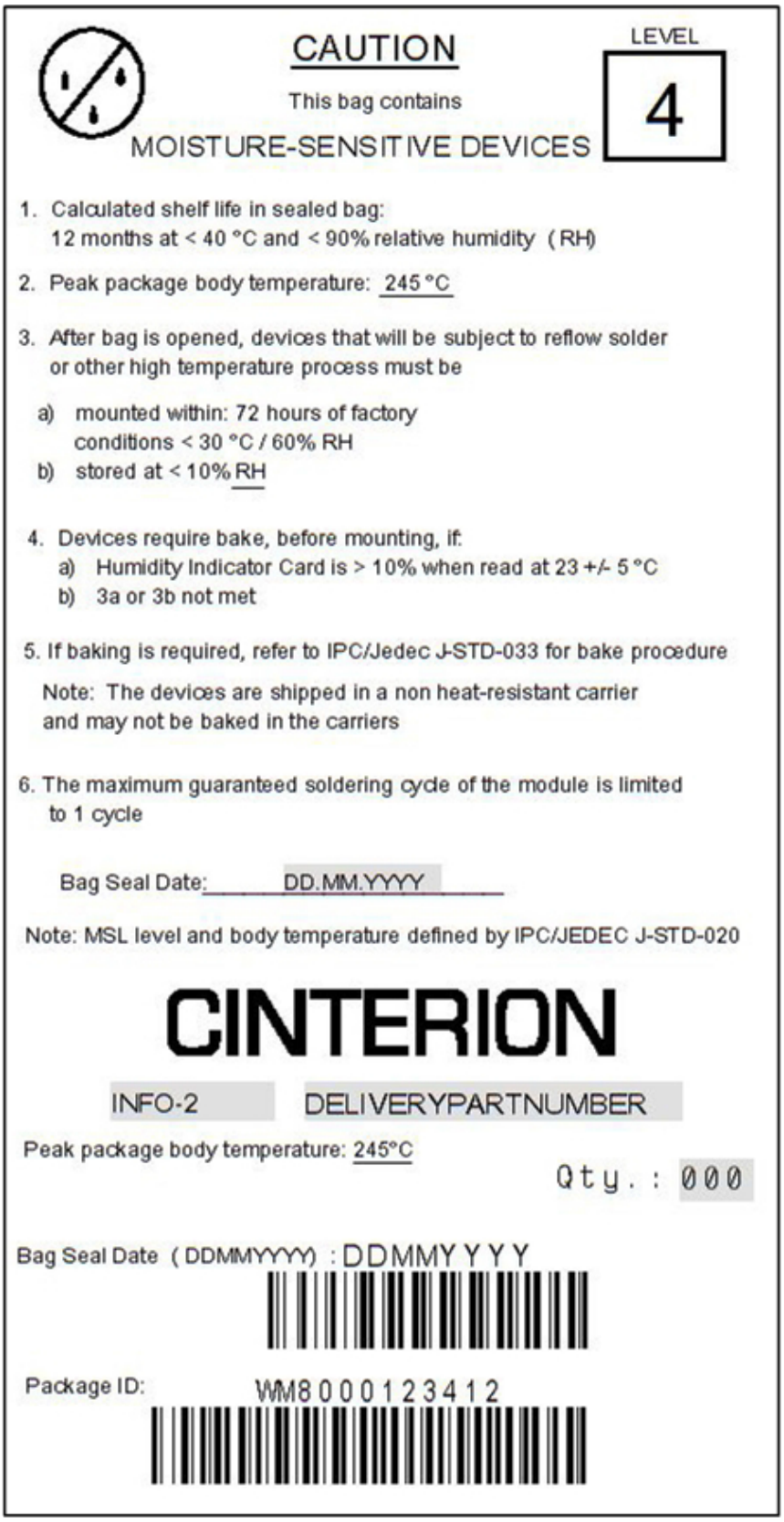

Figure 60: **Moisture Sensitivity Label**

MBBs contain one or more desiccant pouches to absorb moisture that may be in the bag. The humidity indicator card described below should be used to determine whether the enclosed components have absorbed an excessive amount of moisture.

The desiccant pouches should not be baked or reused once removed from the MBB.

The humidity indicator card is a moisture indicator and is included in the MBB to show the approximate relative humidity level within the bag. Sample humidity cards are shown in Figure 61. If the components have been exposed to moisture above the recommended limits, the units will have to be rebaked.

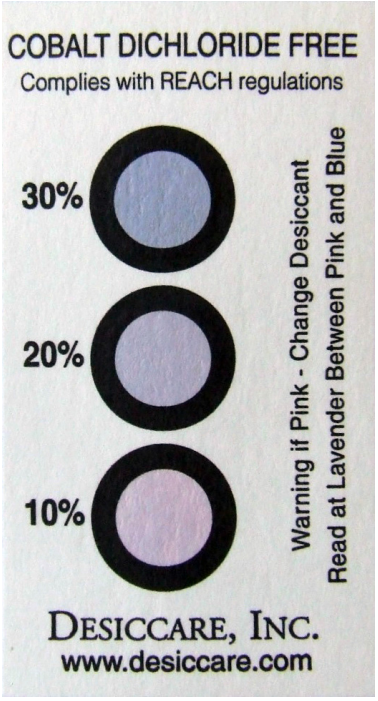

Figure 61: Humidity Indicator Card - HIC

A baking is required if the humidity indicator inside the bag indicates 10% RH or more.

5.3.2.2 Transportation Box

Tape and reel carriers are distributed in a box, marked with a barcode label for identification purposes. A box contains two reels with 500 modules each.

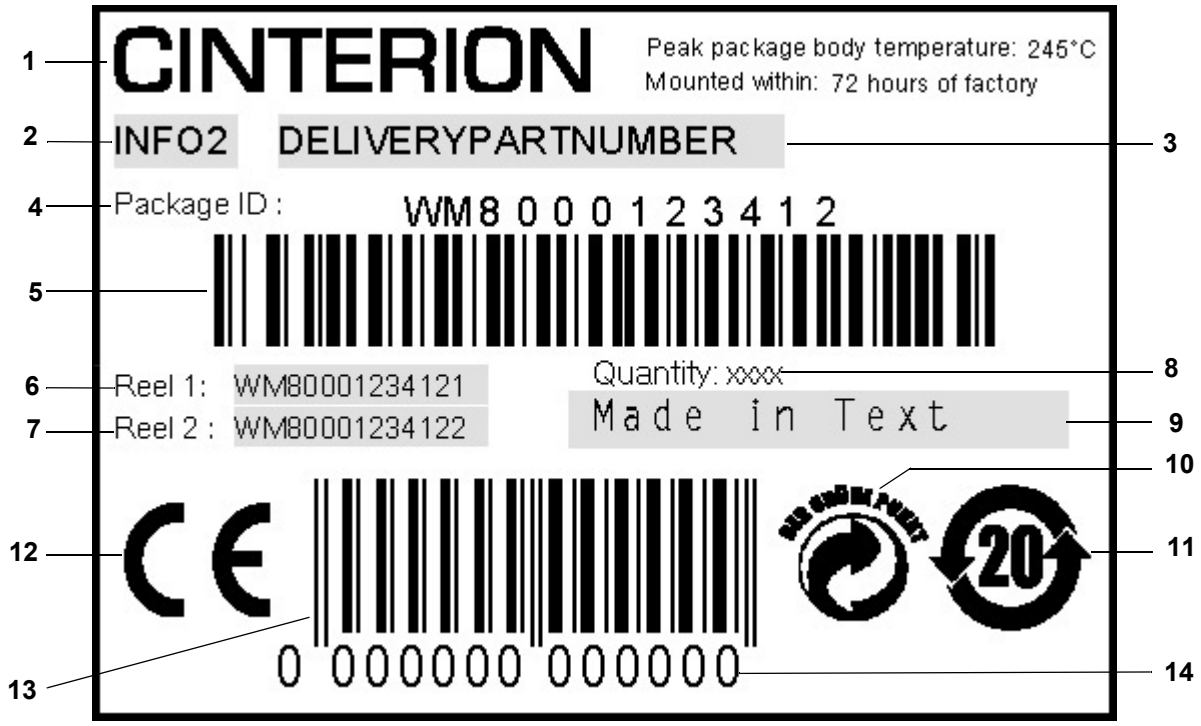

Figure 62: **Sample of VP box label**

Table 26: **VP Box label information**

No.	Information
1	Cinterion logo
2	Product name
3	Product ordering number
4	Package ID number of VP box (format may vary depending on the product)
5	Package ID barcode (Code 128)
6	Package ID Reel 1 (format may vary depending on the product)
7	Package ID Reel 2 (format may vary depending on the product)
8	Quantity of the modules inside the VP box (max. 1000 pcs)
9	Country of production
10	Der Grüne Punkt (Green Dot) symbol
11	Chinese RoHS symbol (see Table 31)
12	CE logo (CE mark on VP box label is present only for modules with CE imprinted on the shielding)
13	European Article Number (EAN-13) barcode
14	European Article Number, consists of 13 digits (EAN-13)

5.3.3 Trays

If small module quantities are required, e.g., for test and evaluation purposes, ELS62 may be distributed in trays (for dimensions see Figure 63). The small quantity trays are an alternative to the single-feed tape carriers normally used. However, the trays are not designed for machine processing. They contain modules to be (hand) soldered onto an external application (for information on hand soldering see [5]).

Trays are packed and shipped in the same way as tape carriers, including a moisture barrier bag with desiccant and humidity indicator card as well as a transportation box (see also Section 5.3.2).

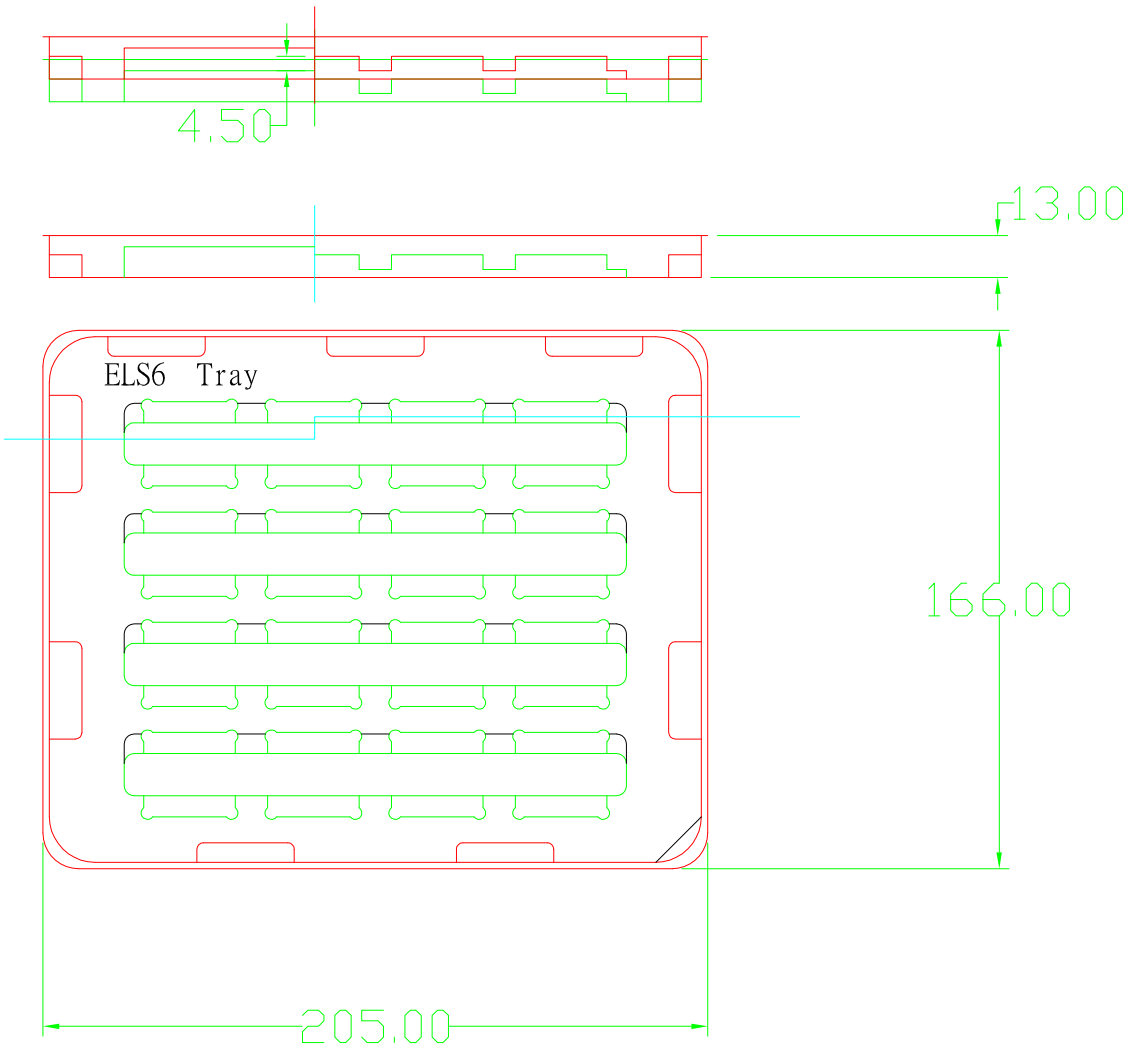

Figure 63: Tray dimensions

6 Regulatory and Type Approval Information

6.1 Directives and Standards

ELS62 is designed to comply with the directives and standards listed below.

It is the responsibility of the application manufacturer to ensure compliance of the final product with all provisions of the applicable directives and standards as well as with the technical specifications provided in the "ELS62 Hardware Interface Description".[6]

Table 27: Directives

2014/53/EU	Directive of the European Parliament and of the council of 16 April 2014 on the harmonization of the laws of the Member States relating to the making available on the market of radio equipment and repealing Directive 1999/05/EC. The product is labeled with the CE conformity mark.
2011/65/EU (RoHS 2) (EU) 2015/863	Directive 2011/65/EU of the European Parliament and of the council of 8 June 2011 on the restriction of the use of certain hazardous substance in electrical and electronic equipment. Commission Delegated Directive (EU) 2015/863 of 31 March 2015 amending Annex II to Directive 2011/65/EU of the European Parliament and of the Council as regards the list of restricted substances.
1907/2006/EC (REACH)	Regulation (EC) No 1907/2006 of the European Parliament and of the Council of 18 December 2006 concerning the Registration, Evaluation, Authorization and Restriction of Chemicals (REACH), establishing an European Chemicals Agency, amending Directive 1999/45/EC and repealing Council Regulation (EEC) No 793/93 and Commission Regulation (EC) No 1488/94 as well as Council Directive 76/769/EEC and Commission Directive 91/155/EEC, 93/67/EC and 2000/21/EC. Cinterion® module comply with the REACH regulation that specifies a content of less than 0.1% per substance mentioned in the SVHC candidate list (Release 16.06.2014)

Table 28: Standards of North American type approval

CFR Title 47	Code of Federal Regulations, Part 2, Part 22, Part 24, Part 27; US Equipment Authorization FCC
OET Bulletin 65 (Edition 97-01)	Evaluating Compliance with FCC Guidelines for Human Exposure to Radio frequency Electromagnetic Fields

6. Manufacturers of applications which can be used in the US shall ensure that their applications have a PTCRB approval. For this purpose they can refer to the PTCRB approval of the respective module.

Table 29: Standards of European type approval

3GPP TS 51.010-1	Digital cellular telecommunications system (Release 7); Mobile Station (MS) conformance specification;
GCF-CC V3.84	Global Certification Forum - Certification Criteria
ETSI EN 301 511 V12.5.1	Global System for Mobile communications (GSM); Mobile Stations (MS) equipment; Harmonized Standard covering the essential requirements of article 3.2 of Directive 2014/53/EU
ETSI EN 301 908-1 V13.1.1	IMT cellular networks; Harmonized Standard covering the essential requirements of article 3.2 of the Directive 2014/53/EU; Part 1: Introduction and common requirements
ETSI EN 301 908-13 V13.1.1	IMT cellular networks; Harmonized Standard covering the essential requirements of article 3.2 of the Directive 2014/53/EU; Part 13: evolved Universal Terrestrial Radio Access (E-UTRA) User Equipment (UE).
ETSI EN 301 489-1 V2.2.3	Electromagnetic Compatibility (EMC) standard for radio equipment and services; Part 1: Common technical requirements; Harmonized Standard covering the essential requirements of article 3.1(b) of Directive 2014/53/EU and the essential requirements of article 6 of Directive 2014/30/EU
ETSI EN 301 489-52 V1.2.1(2021-11)	ElectroMagnetic Compatibility (EMC) standard for radio equipment and ser- vices; Part 19: Specific conditions for Receive Only Mobile Earth Stations (ROMES) operating in the 1,5 GHz band providing data communications and GNSS receivers operating in the RNSS band (ROGNSS) providing positioning, navigation, and timing data; Harmonised Standard covering the essential requirements of article 3.1(b) of Directive 2014/53/EU
IEC 62368-1	Audio/video, information and communication technology equipment - Part 1: Safety requirements (for details see Section 6.1.1)

Table 30: Standards (Statutory Instruments) for UK

S.I. 2019/696 Part 3 Regulation 32 Schedule 29	The Product Safety and Metrology etc. (Amendment etc.) (EU Exit) Regulations 2019, Amendment of the Radio Equipment Regulations 2017 and related amendments. The product is labeled with the UK conformity mark
S.I. 2012/3032	Restriction of the Use of Certain Hazardous Substances in Electrical and Electronic Equipment Regulations 2012
S.I. 2016 No. 1101 Chapter 1, clause 6-1 a	Electrical Equipment (Safety) Regulations 2016
S.I. 2016 No. 1091 Chapter 1, clause 6-1 b	The Electromagnetic Compatibility Regulations 2016

Table 30: Standards (Statutory Instruments) for UK

S.I. 2017 No. 1206 Chapter 1, clause 6-2	The Radio Equipment Regulations 2017

Table 31: Requirements of quality

IEC 60068	Environmental testing
EN 62311:2020	Assessment of electronic and electrical equipment related to human expo- sure restrictions for electromagnetic fields (0 Hz - 300 GHz)

Table 32: Standards of the Ministry of Information Industry of the People's Republic of China

GB/T 26572-2011	"Requirements for Concentration Limits for Certain Hazardous Substances in Electronic Information Products".
SJ/T 11364-2014	"Marking for Control of Pollution Caused by Electronic Information Products" (2014-07). This product per the symbol shown here does not contain hazardous substances and is a green and environmentally friendly product, which can be recycled after being discarded. Please see Table 33 for an overview of toxic or hazardous substances or elements that might be contained in product parts in concentrations above the limits defined by SJ/T 11363-2014.

Table 33: **Toxic or hazardous substances or elements with defined concentration limits**

部件名称 Name of the part	有毒有害物质或元素 Hazardous substances					
	铅 (Pb)	汞 (Hg)	镉 (Cd)	六价铬 (Cr(VI))	多溴联苯 (PBB)	多溴二苯醚 (PBDE)
银色金属外壳 (Silvery Metal Shell)	○	○	○	○	○	○
绿色印刷电路板 (Green PCB)	○	○	○	○	○	○
黑色芯片 (Black Chip IC Body)	○	○	○	○	○	○

○: 表示该有害物质在该部件所有均质材料中的含量均在 GB/T26572 规定的限量要求以下。
Indicates that this toxic or hazardous substance contained in all of the homogeneous materials for this part is below the limit requirement in GB/T26572.

×: 表示该有害物质至少在该部件的某一均质材料中的含量超出 GB/T26572规定的限量要求。
Indicates that this toxic or hazardous substance contained in at least on of the homogeneous materials used for this part *might exceed* the limit requirement in GB/T26572.

6.1.1 IEC 62368-1 Classification

With respect to the safety requirements for audio/video, information and communication technology equipment defined by the hazard based product safety standard for ICT and AV equipment - i.e., IEC-62368-1 - Cinterion® modules are classified as shown below:

Standalone operation of the modules is not possible. Modules will always be incorporated in an external application (Customer Product).

Customer understands and is responsible that the product incorporating the Cinterion® module must be designed to be compliant with IEC-62368-1 to ensure protection against hazards and injuries. When operating the Cinterion® module the external application (Customer Product) must provide safeguards not to exceed the power limits given by classification to Power Source Class 1 (15 Watts) under normal operating conditions, abnormal conditions, or in the presence of a single fault. When using a battery power supply the external application must provide safeguards not to exceed the limits defined by PS-1, as well. The external application (Customer Product) must take measures to limit the power, the voltage or the current, respectively, if required, and must provide safeguards to protect ordinary persons against pain or injury caused by the voltage/current.

In case of a usage of the Cinterion® module not in accordance with the specifications or in single fault condition the external application (Customer Product) must be capable to with-

stand levels according to ES-1 / PS-1 also on all ports that are initially intended for signalling or audio, e.g., USB, RS-232, GPIOs, earphone and microphone interfaces.

In addition, the external application (Customer Product) must be designed in a way to distribute thermal energy generated by the intended operation of the Cinterion® module. In case of high temperature operation, the external application must provide safeguards to protect ordinary persons against pain or injury caused by the heat.

Table 34: IEC 62368-1 Classification

Source of Energy	Class	Limits
Electrical energy source	ES-1	The Cinterion® modules contain no electrical energy source - especially no battery. The electrical components and circuits have to be externally power supplied: DC either smaller 60 V Or less than 2 mA AC up to 1kHz smaller 30 V-rms or 42.4 V peak AC above 100kHz smaller 70 V rms
Power Source (potential ignition source causing fire)	PS-1	Power source provided by the external application must not exceed 15W, even under worst case and any single fault condition defined by IEC-62368-1: Section 6.2.2.3.
Hazardous Substances, Chemical reaction	-	Under regular conditions, the Cinterion® modules does not contain any chemically reactive substances, and no chemical energy source, especially no battery. Module is compliant with RoHS and REACH. In very rare cases however - under abnormal conditions 9i.e. wrong supply voltage, burned module) or in the presence of single electrical component faults (i.e. shortcut) - health hazardous substances might be released if the worst comes to the worst.
Kinetic / mechanical energy source	MS-1	The Cinterion® modules have no sharp edges and corners, no moving parts, no loosing, exploding or imploding parts. The mass is well below 1kg.

Table 34: **IEC 62368-1 Classification**

Source of Energy	Class	Limits
Thermal energy source	TS-2	Under normal operating conditions, abnormal operating conditions or single fault conditions the temperature does not exceed +100°C on the metal surface (shielding)
Thermal energy source Note: Valid only for Cinterion® modules with dimensions larger than 50mm and operating board temperatures higher than +80°C.	TS-3	Special safeguards required.
Radiated energy source	RS-1	The Cinterion® module does not contain a radiant energy source, any lasers, lamps, LEDs, X-Ray emitting components or acoustic couplers.

6.2 SAR requirements specific to portable mobiles

Mobile phones, PDAs or other portable transmitters and receivers incorporating a GSM module must be in accordance with the guidelines for human exposure to radio frequency energy. This requires the Specific Absorption Rate (SAR) of portable ELS62 based applications to be evaluated and approved for compliance with national and/or international regulations.

Since the SAR value varies significantly with the individual product design manufacturers are advised to submit their product for approval if designed for portable use. For European-markets the relevant directives are mentioned below. It is the responsibility of the manufacturer of the final product to verify whether or not further standards, recommendations or directives are in force outside these areas.

Products intended for sale on European markets

EN 50360	Product standard to demonstrate the compliance of mobile phones with the basic restrictions related to human exposure to electromagnetic fields (300MHz - 3GHz)
EN 62311:2008	Assessment of electronic and electrical equipment related to human expo-sure restrictions for electromagnetic fields (0 Hz - 300 GHz)

Please note that SAR requirements are specific only for portable devices and not for mobile devices as defined below:

- Portable device:

  A portable device is defined as a transmitting device designed to be used so that the radiating structure(s) of the device is/are within 20 centimeters of the body of the user.

- Mobile device:

  A mobile device is defined as a transmitting device designed to be used in other than fixed locations and to generally be used in such a way that a separation distance of at least 20 centimeters is normally maintained between the transmitter's radiating structure(s) and the body of the user or nearby persons. In this context, the term "fixed location" means that the device is physically secured at one location and is not able to be easily moved to another location.

6.3 Reference Equipment for Type Approval

The Telit Cinterion reference setup submitted to type approve ELS62 (including a special approval adapter for the DSB75) is shown in the following figure[7]:

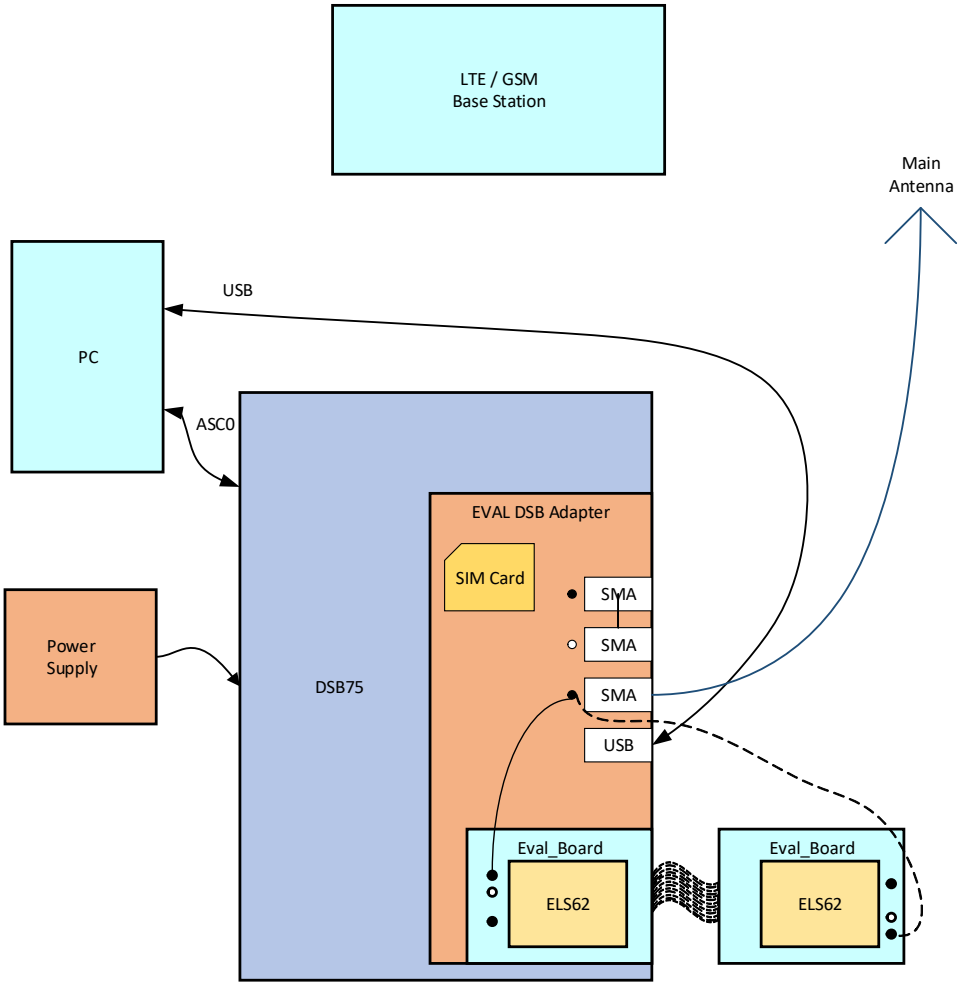

Figure 64: Reference equipment for Type Approval

7. For RF performance tests a mini-SMT/U.FL to SMA adapter with attached 6dB coaxial attenuator is chosen to connect the evaluation module directly to the GSM test equipment instead of employing the SMA antenna connectors on the ELS62-DSB75 adapter as shown in Figure 64. The following products are recommended:
Hirose SMA-Jack/U.FL-Plug conversion adapter HRMJ-U.FLP(40)
(for details see http://www.hirose-connectors.com/ or http://www.farnell.com/
Aeroflex Weinschel Fixed Coaxial Attenuator Model 3T/4T
(for details see http://www.aeroflex.com/ams/weinschel/pdfiles/wmod3&4T.pdf)

6.4 Compliance with FCC Rules and Regulations for ELS62-W

The Equipment Authorization Certification for the Telit Cinterion reference application described in Section 6.3 will be registered under the following identifiers:

FCC Identifier: QIPELS62-W

Granted to Telit Cinterion Deutschland GmbH

Manufacturers of mobile or fixed devices incorporating ELS62-W modules are authorized to use the FCC Grants of the ELS62 modules for their own final products according to the conditions referenced in these documents. In this case, an FCC label of the module shall be visible from the outside, or the host device shall bear a second label stating "Contains FCC ID: QIPELS62-W".

The integration is limited to fixed or mobile categorized host devices, where a separation distance between the antenna and any person of min. 20cm can be assured during normal operating conditions.

For mobile and fixed operation configuration the antenna gain, including cable loss, must not exceed the limits listed in the following Table 35 for FCC.

Table 35: Antenna gain limits for FCC (for ELS62-W variant only)

Operation band	FCC limit	Unit
Maximum gain in GSM850	9.10	dBi
Maximum gain in PCS1900	10.7	dBi
Maximum gain in LTE Band 2	8.01	dBi
Maximum gain in LTE Band 4	5	dBi
Maximum gain in LTE Band 5	9.41	dBi
Maximum gain in LTE Band 7	8.01	dBi
Maximum gain in LTE Band 38	8.01	dBi
Maximum gain in LTE Band 40	0	dBi
Maximum gain in LTE Band 41	8.01	dBi
Maximum gain in LTE Band 66	5	dBi

Warning: Manufacturers of portable applications incorporating ELS62 modules are required to have their final product certified and apply for their own FCC Grant related to the specific portable mobile. This is mandatory to meet the SAR requirements for portable mobiles (see Table 35 for detail).

Changes or modifications not expressly approved by the party responsible for compliance could void the user's authority to operate the equipment.

Note: This equipment has been tested and found to comply with the limits for a Class B digital device, pursuant to part 15 of the FCC Rules. These limits are designed to provide reasonable protection against harmful interference in a residential installation. This equip-

ment generates, uses and can radiate radio frequency energy and, if not installed and used in accordance with the instructions, may cause harmful interference to radio communications. However, there is no guarantee that interference will not occur in a particular installation. If this equipment does cause harmful interference to radio or television reception, which can be determined by turning the equipment off and on, the user is encouraged to try to correct the interference by one or more of the following measures:

- Reorient or relocate the receiving antenna.
- Increase the separation between the equipment and receiver.
- Connect the equipment into an outlet on a circuit different from that to which the receiver is connected.
- Consult the dealer or an experienced radio/TV technician for help.

FCC Part 15.19 Warning Statement

THIS DEVICE COMPLIES WITH PART 15 OF THE FCC RULES. OPERATION IS SUBJECT TO THE FOLLOWING TWO CONDITIONS: (1) THIS DEVICE MAY NOT CAUSE HARMFUL INTERFERENCE, AND (2) THIS DEVICE MUST ACCEPT ANY INTERFERENCE RECEIVED, INCLUDING INTERFERENCE THAT MAY CAUSE UNDESIRED OPERATION.

FCC Part RF Exposure compliance statement

THIS MODULE COMPLIES WITH FCC RADIATION EXPOSURE LIMITS SET FORTH FOR AN UNCONTROLLED ENVIRONMENT. THIS EQUIPMENT SHOULD BE INSTALLED AND OPERATED WITH A MINIMUM DISTANCE OF 20CMBETWEEN THE RADIATOR AND YOUR BODY. THIS TRANSMITTER MUST NOT BE CO-LOCATED OR OPERATING INCONJUNCTION WITH ANY OTHER ANTENNA OR TRANSMITTER.

FCC KDB 996369 Statement

A separate approval is required for all other operating configurations, including portable configurations with respect to §2.1093 and different antenna configurations.

Labelling requirements share be complied on end user device. Labelling rules for special device, please refer to §2.925 and §15.19(a)(5) and relevant KDB publications. For E-label, please refer to §2.935. FCC regulatory Compliance statement mentioned in this manual shall be properly included in host product manual per FCC Rules. The host product manufacturer shall be aware not to provide information to the end user how to install or remove this module in your host product manual.

In order to comply with FCC certification, host manufacture should contact us, the original module manufacturer, to get support for test mode configuration/testing requirements.

Disclaimer on additional testing, Part 15 Subpart B compliance of Host Product

This modular transmitter is only FCC authorized for the specific rule parts listed on our grant, host product manufacturer is responsible for compliance to any other FCC rules that apply to the host not covered by the modular transmitter grant of certification. Host manufacturer in any case shall ensure host product which is installed and operating with module is in compliant with Part 15B requirements. Please note that For a Class B or Class A digital device or peripheral, the instructions furnished the end-user product shall include

statement set out in §15.105 Information to the user or such similar statement and place it in a prominent location of host product manual.

7 Document Information

7.1 Revision History

Preceding document: "Cinterion® ELS62 Hardware Interface Description" v01.100a, Rev. 0

New document: "Cinterion® ELS62 Hardware Interface Description" v01.100a, Rev. 1

Chapter	What is new
6.4	Updated antenna gain values in Table 35; Added FCC KDB 996369 Statement.

Preceding document: "Cinterion® ELS62 Hardware Interface Description" Version 01.100a

New document: "Cinterion® ELS62 Hardware Interface Description" Version 01.100a, Rev. 0

Chapter	What is new
6	Added Table 28 and 6.4.
8.1, 8.2	Updated the label information.
--	Overall layout updates.

Preceding document: "Cinterion® ELS62 Hardware Interface Description" Version 01.100

New document: "Cinterion® ELS62 Hardware Interface Description" Version 01.100a

Chapter	What is new
2.8	Updated Figure 1.
2.9	Updated Figure 2.
3.1.6	Updated description for 2 UICC interfaces.
3.1.8.3	Updated Figure 22.
3.1.10.4	Added description of assumptions for a sample capacity calculation.
3.3	Updated Figure 35.
4.2.5.2	Added description of typical undervoltage lockout voltage.
4.4.1	Added values of voltage ripple.
4.5	Updated Table 20 for extended operation and automatic shutdown temperatures.
8.1	Updated Table 36 for ordering information.
--	Overall layout updates.

Preceding document: "Cinterion® ELS62 Hardware Interface Description" Version 01.000

New document: "Cinterion® ELS62 Hardware Interface Description" Version 01.100

Chapter	What is new
--	Removed Pulse Counter (hardware prepared) throughout the document.

3.1.2	Updated Table 4 for Emergency reset and Fast shutdown signal properties.
3.3	Updated Figure 35 for Sample Application.
4.2.3	Updated GPIO6 first start up configuration, FST_SHDN reset state, and FST_SHDN first start up configuration in Table 16.
4.4.1	Updated values in Table 19.

Preceding document: "Cinterion® ELS62 Hardware Interface Description" Version 00.804

New document: "Cinterion® ELS62 Hardware Interface Description" Version 01.000

Chapter	What is new
-	Removed GPIO4.
3.1.10.4	Revised complete section on fast shutdown.
3.2.1	Updated Table 14.
4.2.1.2	Revised Figure 38 for ON startup timing.
4.2.2.2	Revised Figure 41 for EMERG_RST timing.
4.4.1	Updated Table 19.
4.6	Updated Table 21 Electrostatic value.
5.2.3.1	Revised reflow profile.
6	Updated Approval Chapter.
8.2	Added the label information.

Preceding document: "Cinterion® ELS62 Hardware Interface Description" Version 00.026

New document: "Cinterion® ELS62 Hardware Interface Description" Version 00.804

Chapter	What is new
2.7	Updated key features.
2.9	Updated Figure 2.
3.1.1	Updated pad assignment table and figure style.
3.1.2	Updated values in Table 4.
3.1.7.2	Added I^2S interface.
3.1.7.3	Added Table 9.
3.1.8	Added Figure 18 and Figure 19.
3.1.8.3	Added this chapter.
4.2.5.2	Replaced TBD to 0.05V offset.
4.2.5.3	Replaced TBD to 0.05V offset.
4.3	Removed TBD for this chapter.
4.4.2	Added Minimizing Power Losses.
4.7	Updated figure and table in this chapter.

4.8	Updated the Vibration test value.
5.3.1.2	Added Figure 58.
5.3.2.2	Added Figure 62 and Figure 63.

Preceding document: "Cinterion® ELS62 Hardware Interface Description" Version 00.001c

New document: "Cinterion® ELS62 Hardware Interface Description" Version 00.026

Chapter	What is new
2.7	Updated key features.
3.1.1	Corrected issues in Pad assignment.
3.1.2	Updated values in Table 5.

Preceding document: "Cinterion® ELS62 Hardware Interface Description" Version 00.001c

New document: "Cinterion® ELS62 Hardware Interface Description" Version 00.001b

Chapter	What is new
3.1.1	Corrected issues in Pad assignment.

Preceding document: "Cinterion® ELS62 Hardware Interface Description" Version 00.001a

New document: "Cinterion® ELS62 Hardware Interface Description" Version 00.001b

Chapter	What is new
2.7	Updated the EGPRS and module weight and added LGA Devkit
3.1.1	Updated Pad assignment.
3.1.2	Updated values in Table 5.
3.1.8	Updated Analog Audio Interface.
2.1.10	Updated Pulse Counter.
4.2.3	Added Table 16.

Preceding document: "Cinterion® ELS62 Hardware Interface Description" Version 00.001

New document: "Cinterion® ELS62 Hardware Interface Description" Version 00.001a

Chapter	What is new
2.7	Updated the normal power range.
3.1.2	Updated the Vimax to 4.5V and Vimin to 3.0V in Table 5.

New document: "Cinterion® ELS62 Hardware Interface Description" Version 00.001

Chapter	What is new
--	Initial document setup.

7.2 Related Documents

[1] ELS62 AT Command Set
[2] ELS62 Release Note
[3] Universal Serial Bus Specification Revision 2.0, April 27, 2000
[4] Application Note 40: Thermal Solutions
[5] Application Note 48: SMT Module Integration
[6] Differences between Selected Cinterion® Modules, Hardware Migration Guide
[7] Cinterion® LGA DevKit User Guide
[8] Cinterion® LGA DevKit online help
[9] Getting Started with Cinterion® ELS62
[10] DSB75 Development Support Board Hardware Interface Description
[11] DSB-Mini User Guide

7.3 Terms and Abbreviations

Abbreviation	Description
ADC	Analog-to-digital converter
AGC	Automatic Gain Control
ANSI	American National Standards Institute
ARFCN	Absolute Radio Frequency Channel Number
ARP	Antenna Reference Point
ASC0/ASC1	Asynchronous Controller. Abbreviations used for first and second serial interface of ELS62
B	Thermistor Constant
BER	Bit Error Rate
BIP	Bearer Independent Protocol
BTS	Base Transceiver Station
CB or CBM	Cell Broadcast Message
CE	Conformité Européene (European Conformity)
CHAP	Challenge Handshake Authentication Protocol
CPU	Central Processing Unit
CS	Coding Scheme
CSD	Circuit Switched Data
CTS	Clear to Send
DAC	Digital-to-Analog Converter
dBm0	Digital level, 3.14dBm0 corresponds to full scale, see ITU G.711, A-law
DCE	Data Communication Equipment (typically modems, e.g. Telit Cinterion module)

Abbreviation	Description
DCS 1800	Digital Cellular System, also referred to as PCN
DRX	Discontinuous Reception
DSB	Development Support Box
DSP	Digital Signal Processor
DSR	Data Set Ready
DTR	Data Terminal Ready
DTX	Discontinuous Transmission
EFR	Enhanced Full Rate
EGSM	Enhanced GSM
EIRP	Equivalent Isotropic Radiated Power
EMC	Electromagnetic Compatibility
ERP	Effective Radiated Power
ESD	Electrostatic Discharge
ETS	European Telecommunication Standard
ETSI	European Telecommunication Standards Institute
FCC	Federal Communications Commission (U.S.)
FDMA	Frequency Division Multiple Access
FR	Full Rate
GMSK	Gaussian Minimum Shift Keying
GPIO	General Purpose Input/Output
GPRS	General Packet Radio Service
GSM	Global Standard for Mobile Communications
HiZ	High Impedance
HR	Half Rate
I/O	Input/Output
IC	Integrated Circuit
IMEI	International Mobile Equipment Identity
ISO	International Standards Organization
ITU	International Telecommunications Union
kbps	kbits per second
LED	Light Emitting Diode
Li-Ion/Li+	Lithium-Ion
Li battery	Rechargeable Lithium Ion or Lithium Polymer battery

Abbreviation	Description
LPM	Link Power Management
Mbps	Mbits per second
MMI	Man Machine Interface
MO	Mobile Originated
MS	Mobile Station (GSM module), also referred to as TE
MSISDN	Mobile Station International ISDN number
MT	Mobile Terminated
NTC	Negative Temperature Coefficient
OEM	Original Equipment Manufacturer
PA	Power Amplifier
PAP	Password Authentication Protocol
PBCCH	Packet Switched Broadcast Control Channel
PCB	Printed Circuit Board
PCL	Power Control Level
PCM	Pulse Code Modulation
PCN	Personal Communications Network, also referred to as DCS 1800
PCS	Personal Communication System, also referred to as GSM 1900
PDU	Protocol Data Unit
PLL	Phase Locked Loop
PPP	Point-to-point protocol
PSK	Phase Shift Keying
PSU	Power Supply Unit
PWM	Pulse Width Modulation
R&TTE	Radio and Telecommunication Terminal Equipment
RAM	Random Access Memory
RF	Radio Frequency
RLS	Radio Link Stability
RMS	Root Mean Square (value)
RoHS	Restriction of the use of certain hazardous substances in electrical and electronic equipment.
ROM	Read-only Memory
RTC	Real Time Clock
RTS	Request to Send
Rx	Receive Direction

Abbreviation	Description
SAR	Specific Absorption Rate
SAW	Surface Accoustic Wave
SELV	Safety Extra Low Voltage
SIM	Subscriber Identification Module
SMD	Surface Mount Device
SMS	Short Message Service
SMT	Surface Mount Technology
SPI	Serial Peripheral Interface
SRAM	Static Random Access Memory
TA	Terminal adapter (e.g. GSM module)
TDMA	Time Division Multiple Access
TE	Terminal Equipment, also referred to as DTE
TLS	Transport Layer Security
Tx	Transmit Direction
UART	Universal asynchronous receiver-transmitter
URC	Unsolicited Result Code
USSD	Unstructured Supplementary Service Data
VSWR	Voltage Standing Wave Ratio

7.4 Safety Precaution Notes

The following safety precautions must be observed during all phases of the operation, usage, service or repair of any cellular terminal or mobile incorporating ELS62. Manufacturers of the cellular terminal are advised to convey the following safety information to users and operating personnel and to incorporate these guidelines into all manuals supplied with the product. Failure to comply with these precautions violates safety standards of design, manufacture and intended use of the product. Telit Cinterion assumes no liability for customer's failure to comply with these precautions.

	When in a hospital or other health care facility, observe the restrictions on the use of mobiles. Switch the cellular terminal or mobile off, if instructed to do so by the guidelines posted in sensitive areas. Medical equipment may be sensitive to RF energy. The operation of cardiac pacemakers, other implanted medical equipment and hearing aids can be affected by interference from cellular terminals or mobiles placed close to the device. If in doubt about potential danger, contact the physician or the manufacturer of the device to verify that the equipment is properly shielded. Pacemaker patients are advised to keep their hand-held mobile away from the pacemaker, while it is on.
	Switch off the cellular terminal or mobile before boarding an aircraft. Make sure it cannot be switched on inadvertently. The operation of wireless appliances in an aircraft is forbidden to prevent interference with communications systems. Failure to observe these instructions may lead to the suspension or denial of cellular services to the offender, legal action, or both.
	Do not operate the cellular terminal or mobile in the presence of flammable gases or fumes. Switch off the cellular terminal when you are near petrol stations, fuel depots, chemical plants or where blasting operations are in progress. Operation of any electrical equipment in potentially explosive atmospheres can constitute a safety hazard.
	Your cellular terminal or mobile receives and transmits radio frequency energy while switched on. Remember that interference can occur if it is used close to TV sets, radios, computers or inadequately shielded equipment. Follow any special regulations and always switch off the cellular terminal or mobile wherever forbidden, or when you suspect that it may cause interference or danger.
	Road safety comes first! Do not use a hand-held cellular terminal or mobile when driving a vehicle, unless it is securely mounted in a holder for speakerphone operation. Before making a call with a hand-held terminal or mobile, park the vehicle. Speakerphones must be installed by qualified personnel. Faulty installation or operation can constitute a safety hazard.

SOS	IMPORTANT! Cellular terminals or mobiles operate using radio signals and cellular networks. Because of this, connection cannot be guaranteed at all times under all conditions. Therefore, you should never rely solely upon any wireless device for essential communications, for example emergency calls. Remember, in order to make or receive calls, the cellular terminal or mobile must be switched on and in a service area with adequate cellular signal strength. Some networks do not allow for emergency calls if certain network services or phone features are in use (e.g. lock functions, fixed dialing etc.). You may need to deactivate those features before you can make an emergency call. Some networks require that a valid SIM card be properly inserted in the cellular terminal or mobile.

8 Appendix

8.1 List of Parts and Accessories

Table 36: List of parts and accessories

Description	Supplier	Ordering information
ELS62-W	Telit Cinterion	Standard module Telit Cinterion IMEI: Packaging unit (ordering) number: L30960-N7300-A110 Module label number: S30960-S7300-A110.[1]
ELS62-E	Telit Cinterion	Standard module Telit Cinterion IMEI: Packaging unit (ordering) number: L30960-N7310-A110 Module label number: S30960-S7310-A110.
ELS62-I	Telit Cinterion	Standard module Telit Cinterion IMEI: Packaging unit (ordering) number: L30960-N7320-A110 Module label number: S30960-S7320-A110.
ELS62-BR	Telit Cinterion	Standard module Telit Cinterion IMEI: Packaging unit (ordering) number: L30960-N7330-A110 Module label number: S30960-S7330-A110.
ELS62-C	Telit Cinterion	Standard module Telit Cinterion IMEI: Packaging unit (ordering) number: L30960-N7340-A110 Module label number: S30960-S7340-A110.
ELS62-W Evaluation Module	Telit Cinterion	Ordering number: L30960-N7301-A110
ELS62-E Evaluation Module	Telit Cinterion	Ordering number: L30960-N7311-A110
ELS62-I Evaluation Module	Telit Cinterion	Ordering number: L30960-N7321-A110
ELS62-BR Evaluation Module	Telit Cinterion	Ordering number: L30960-N7331-A110
ELS62-C Evaluation Module	Telit Cinterion	Ordering number: L30960-N7341-A110
EVAL DSB Adapter	Telit Cinterion	Ordering number: L30960-N0100-A100
DSB75 Development Support Board	Telit Cinterion	Ordering number: L36880-N8811-A100

Table 36: List of parts and accessories

Description	Supplier	Ordering information
DSB Mini	Telit Cinterion	Ordering number: L30960-N0030-A100
LGA DevKit	Telit Cinterion	LGA DevKit consists of Cinterion® LGA DevKit SM Base PCB: Ordering number: L30960-N0111-A100 Cinterion® LGA DevKit Socket SML: Ordering number: L30960-N0110-A100

1. Note: At the discretion of Telit Cinterion, module label information can either be laser engraved on the module's shielding or be printed on a label adhered to the module's shielding.

Table 37: Molex sales contacts (subject to change)

Description	Supplier	Ordering information
Molex For further information please click: http://www.molex.com	Molex Deutschland GmbH Otto-Hahn-Str. 1b 69190 Walldorf Germany Phone: +49-6227-3091-0 Fax: +49-6227-3091-8100 Email: mxger-many@molex.com	American Headquarters Lisle, Illinois 60532 U.S.A. Phone: +1-800-78MOLEX Fax: +1-630-969-1352
Molex China Distributors Beijing, Room 1311, Tower B, COFCO Plaza No. 8, Jian Guo Men Nei Street, 100005 Beijing P.R. China Phone: +86-10-6526-9628 Fax: +86-10-6526-9730	Molex Singapore Pte. Ltd. 110, International Road Jurong Town, Singapore 629174 Phone: +65-6-268-6868 Fax: +65-6-265-6044	Molex Japan Co. Ltd. 1-5-4 Fukami-Higashi, Yamato-City, Kanagawa, 242-8585 Japan Phone: +81-46-265-2325 Fax: +81-46-265-2365

8.2 Module Label Information

The label engraved on the top of ELS62 comprises the following information.

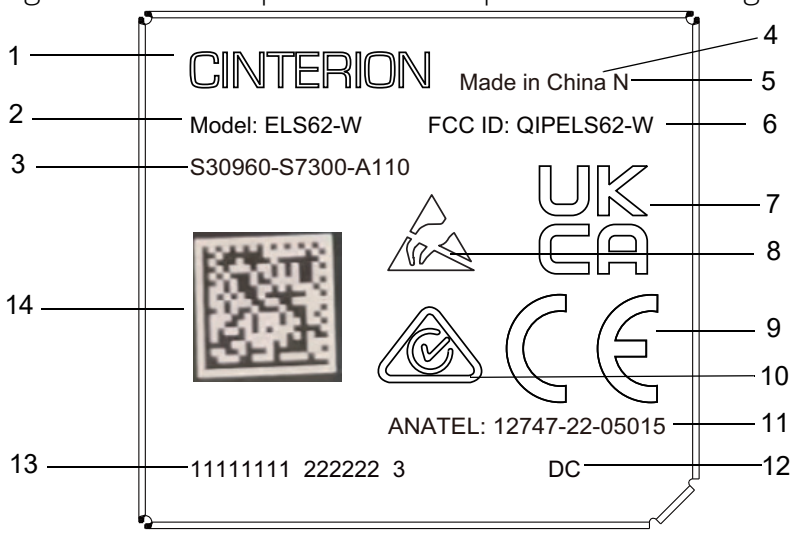

Figure 65: ELS62 Label

Table 38: ELS62 label information

No.	Description
1	Cinterion logo
2	Product name/variant (e.g.,"ELS62-W")
3	Product order code
4	Manufacturing country (e.g., "Made in China")
5	Factory Code
6	FC identifier
7	United Kingdom Conformity Assessed (UKCA) mark
8	Electrostatic discharge (ESD) warning symbol
9	CE conformity mark
10	The Regulatory Compliance Marking (RCM) for Australia
11	ANATEL identifier
12	2-digital data code of product production (for decoding see Table below)
13	Product IMEI
14	Manufacturer 2D barcode

Table 39: Date code table

Date Code												
Code	L	M	N	P	R	S	T	U	V	W	X	A
Year	2019	2020	2021	2022	2023	2024	2025	2026	2027	2028	2029	2030
Code	1	2	3	4	5	6	7	8	9	O	N	D
Month	Jan.	Feb.	Mar.	Apr.	May	June	July	Aug.	Sept.	Oct.	Nov.	Dec.

© Telit 2023 All rights reserved.