SIEMENS
mobile

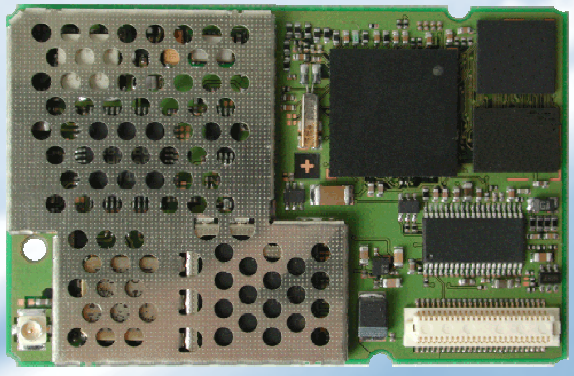

MC46
Siemens Cellular Engine

Version: 03.05
DocID: MC46_HD_V03.05

Hardware Interface Description

Document Name:	**MC46 Hardware Interface Description**
Version:	**03.05**
Date:	**November 13, 2003**
DocId:	**MC46_HD_V03.05**
Status:	**Confidential / Released**

General Notes
Product is deemed accepted by recipient and is provided without interface to recipient's products. The documentation and/or product are provided for testing, evaluation, integration and information purposes. The documentation and/or product are provided on an "as is" basis only and may contain deficiencies or inadequacies. The documentation and/or product are provided without warranty of any kind, express or implied. To the maximum extent permitted by applicable law, Siemens further disclaims all warranties, including without limitation any implied warranties of merchantability, completeness, fitness for a particular purpose and non-infringement of third-party rights. The entire risk arising out of the use or performance of the product and documentation remains with recipient. This product is not intended for use in life support appliances, devices or systems where a malfunction of the product can reasonably be expected to result in personal injury. Applications incorporating the described product must be designed to be in accordance with the technical specifications provided in these guidelines. Failure to comply with any of the required procedures can result in malfunctions or serious discrepancies in results. Furthermore, all safety instructions regarding the use of mobile technical systems, including GSM products, which also apply to cellular phones must be followed. Siemens or its suppliers shall, regardless of any legal theory upon which the claim is based, not be liable for any consequential, incidental, direct, indirect, punitive or other damages whatsoever (including, without limitation, damages for loss of business profits, business interruption, loss of business information or data, or other pecuniary loss) arising out the use of or inability to use the documentation and/or product, even if Siemens has been advised of the possibility of such damages. The foregoing limitations of liability shall not apply in case of mandatory liability, e.g. under the German Product Liability Act, in case of intent, gross negligence, injury of life, body or health, or breach of a condition which goes to the root of the contract. However, claims for damages arising from a breach of a condition, which goes to the root of the contract, shall be limited to the foreseeable damage, which is intrinsic to the contract, unless caused by intent or gross negligence or based on liability for injury of life, body or health. The above provision does not imply a change on the burden of proof to the detriment of the recipient. Subject to change without notice at any time. The interpretation of this general note shall be governed and construed according to German law without reference to any other substantive law.

Copyright
Transmittal, reproduction, dissemination and/or editing of this document as well as utilization of its contents and communication thereof to others without express authorization are prohibited. Offenders will be held liable for payment of damages. All rights created by patent grant or registration of a utility model or design patent are reserved.

Copyright © Siemens AG 2003

Contents

0 Document History 7

1 Introduction 8
1.1 Related documents 8
1.2 Terms and abbreviations 9
1.3 Type approval 12
1.4 Safety precautions 14

2 Product concept 16
2.1 MC46 key features at a glance 17
2.2 Circuit concept 20

3 Application Interface 21
3.1 Operating modes 22
3.2 Power supply 24
3.2.1 Power supply pins on the board-to-board connector 24
3.2.2 Minimizing power losses 25
3.2.3 Monitoring power supply 25
3.3 Power up / down scenarios 26
3.3.1 Turn on MC46 26
3.3.1.1 Turn on MC46 using the ignition line /IGT (Power on) 27
3.3.1.2 Timing of the ignition process 28
3.3.1.3 Turn on MC46 using the POWER signal 29
3.3.1.4 Turn on MC46 using the RTC (Alarm mode) 29
3.3.2 Turn off MC46 30
3.3.2.1 Turn off MC46 using AT command 30
3.3.2.2 Maximum number of turn-on / turn-off cycles 31
3.3.2.3 Emergency shutdown using /EMERGOFF pin 31
3.3.3 Automatic shutdown 32
3.3.3.1 Temperature dependent shutdown 32
3.3.3.2 Temperature control during emergency call 33
3.3.3.3 Undervoltage shutdown if battery NTC is present 33
3.3.3.4 Undervoltage shutdown if no battery NTC is present 34
3.3.3.5 Overvoltage shutdown 34
3.4 Automatic GPRS Multislot Class change 35
3.5 Charging control 36
3.5.1 Battery pack characteristics 37
3.5.1.1 Recommended battery pack 38
3.5.2 Implemented charging technique 39
3.5.3 Operating modes during charging 40
3.5.4 Charger requirements 41
3.6 Power saving 42
3.6.1 No power saving (AT+CFUN=1) 42
3.6.2 NON-CYCLIC SLEEP mode (AT+CFUN=0) 42
3.6.3 CYCLIC SLEEP mode (AT+CFUN=5, 6, 7 and 8) 43
3.6.4 Timing of the /CTS signal in CYCLIC SLEEP modes 43
3.6.5 Wake up MC46 from SLEEP mode 45
3.7 Summary of state transitions (except SLEEP mode) 46
3.8 RTC backup 47
3.9 Serial interfaces 48

3.9.1 Features supported on first and second serial interface 49
3.10 Audio interfaces 51
3.10.1 Microphone circuit 52
3.10.2 Speech processing 53
3.10.3 DAI timing 53
3.11 SIM interface 55
3.11.1 Requirements for using the CCIN pin 56
3.11.2 Design considerations for SIM card holder 57
3.12 Control signals 58
3.12.1 Inputs 58
3.12.2 Outputs 59
3.12.2.1 Synchronization signal 59
3.12.2.2 Using the SYNC pin to control a status LED 60
3.12.2.3 Behavior of the /RING0 line (ASC0 interface only) 61

4 Antenna interface 63
4.1 Antenna installation 63
4.1.1 Antenna pad 65
4.1.1.1 Suitable cable types 65
4.1.2 Hirose antenna connector 66

5 Electrical, reliability and radio characteristics 70
5.1 Absolute maximum ratings 70
5.2 Operating temperatures 70
5.3 Electrical specifications of the application interface 71
5.4 Power supply ratings 76
5.4.1 Current consumption during transmit burst 77
5.5 Electrical characteristics of the voiceband part 78
5.5.1 Setting audio parameters by AT commands 78
5.5.2 Audio programming model 79
5.5.3 Characteristics of audio modes 80
5.5.4 Voiceband receive path 82
5.5.5 Voiceband transmit path 83
5.6 Air interface 84
5.7 Electrostatic discharge 86
5.8 Reliability characteristics 87

6 Mechanics 88
6.1 Mechanical dimensions of MC46 88
6.2 Mounting MC46 onto the application platform 91
6.3 Board-to-board connector 92
6.3.1 Mechanical dimensions of the Hirose DF12 connector 93
6.3.2 Adapter cabling 93
6.4 Heat sinks and thermally conductive tapes 94
6.4.1 Test conditions and results 94

7 Reference Approval 96
7.1 Reference Equipment for Type Approval 96
7.2 Compliance with FCC Rules and Regulations 97

8 List of parts and accessories 98

Figures

Figure 1: MC46 block diagram 20
Figure 2: Power supply limits during transmit burst 25
Figure 3: Power-on by ignition signal....27
Figure 4: Timing of power-on process if VDDLP is not used 28
Figure 5: Timing of power-on process if VDDLP is fed from external source....28
Figure 6: Deactivating GSM engine by /EMERGOFF signal....31
Figure 7: Schematic of approved charging transistor, trickle charging and ESD protection..36
Figure 8: Battery pack circuit diagram 37
Figure 9: Charging process 39
Figure 10: Timing of /CTS signal (example for a 2.12 s paging cycle)....44
Figure 11: Beginning of power saving if CFUN=5 or 7....44
Figure 12: RTC supply from capacitor 47
Figure 13: RTC supply from rechargeable battery....47
Figure 14: RTC supply from non-chargeable battery....47
Figure 15: Serial interfaces 48
Figure 16: Audio block diagram....51
Figure 17: Schematic of microphone inputs 52
Figure 18: DAI timing on transmit path 54
Figure 19: DAI timing on receive path 54
Figure 20: SIM card holder of DSB45 Support Box 57
Figure 21: Pin numbers of Molex SIM card holder on DSB45 Support Box 57
Figure 22: SYNC signal during transmit burst 59
Figure 23: LED Circuit (Example)....60
Figure 24: Incoming voice call 61
Figure 25: Incoming data call 61
Figure 26: URC transmission 61
Figure 27: U.FL-R-SMT connector 63
Figure 28: Antenna pad and GND pad 63
Figure 29: Never use antenna connector and antenna pad at the same time....64
Figure 30: Restricted area around antenna pad 64
Figure 31: Mechanical dimensions of U.FL-R-SMT connector....66
Figure 32: U.FL-R-SMT connector with U.FL-LP-040 plug 67
Figure 33: U.FL-R-SMT connector with U.FL-LP-066 plug 67
Figure 34: Specifications of U.FL-LP-(V)-040(01) plug....68
Figure 35: Pin assignment (top view on MC46) 71
Figure 36: Peak current during transmit burst in mA vs. antenna impedance....77
Figure 37: AT audio programming model 79
Figure 38: MC46 – top view....88
Figure 39: Mechanical dimensions of MC46....89
Figure 40: MC46 bottom view....90
Figure 41: Hirose DF12C receptacle on MC46....92
Figure 42: Header Hirose DF12 series 92
Figure 43: Mechanical dimensions of Hirose DF12 connector....93
Figure 44: Reference equipment for approval 96

Tables

Table 1: MC46 key features 17
Table 2: Coding schemes and maximum net data rates over air interface 19
Table 3: Overview of operating modes 22
Table 4: Power supply pins of board-to-board connector 24
Table 5: AT commands available in Alarm mode 29
Table 6: Temperature dependent behavior 33
Table 7: Bill of material for external charging circuit 36
Table 8: Specifications of XWODA battery pack 38
Table 9: Comparison Charge-only and Charge mode 40
Table 10: AT commands available in Charge-only mode....41
Table 11: Wake-up events in NON-CYCLIC and CYCLIC SLEEP modes....45
Table 12: State transitions of MC46 (except SLEEP mode) 46
Table 13: DCE-DTE wiring of 1st serial interface 49
Table 14: DCE-DTE wiring of 2nd serial interface 50
Table 15: Signals of the SIM interface (board-to-board connector) 55
Table 16 : Pin assignment of Molex SIM card holder on DSB45 Support Box 57
Table 17: Input control signals of the MC46 module....58
Table 18: MC46 synchronization signal (if SYNC pin is set to mode 0 via AT^SSYNC)....59
Table 19: Coding of the status LED....60
Table 20: MC46 ring signal....62
Table 21: Return loss 63
Table 22: Product specifications of U.FL-R-SMT connector 66
Table 23: Material and finish of U.FL-R-SMT connector and recommended plugs....67
Table 24: Ordering information for Hirose U.FL Series....69
Table 25: Absolute maximum ratings 70
Table 26: Operating temperatures....70
Table 27: Electrical description of application interface 72
Table 28: Power supply ratings 76
Table 29: Audio parameters adjustable by AT command 78
Table 30: Voiceband characteristics (typical) 80
Table 31: Voiceband receive path 82
Table 32: Voiceband transmit path....83
Table 33: Air Interface....84
Table 34: Local oscillator and intermediate frequencies used by MC46 85
Table 35: Measured electrostatic values 86
Table 36: Summary of reliability test conditions....87
Table 37: Ordering information DF12 series....92
Table 38: Electrical and mechanical characteristics of the Hirose DF12C connector....92
Table 39: Tested heat sinks and thermally conductive tapes and test results 95
Table 40: List of parts and accessories 98
Table 41: Molex sales contacts (subject to change) 99
Table 42: Hirose sales contacts (subject to change) 99

0 Document History

Preceding document: "MC46 Hardware Interface Description" Version **02.8xb**
New document: "MC46 Hardware Interface Description" Version **03.05**

Chapter	Page	What is new
1.3, 7.2	12, 97	MC46 now fully type approved and labeled with CE mark
3.1, 3.3.1.4, 3.5.3	22, 29; 40	Removed remark regarding charging during Alarm mode
3.3.1.4	29	Power saving feature is not available in Alarm mode.
3.3.3.5	34	Modified description of overvoltage conditions.
3.4	35	Modified description of GPRS Multislot Class change.
3.6	42	No power saving during Alarm mode.
3.6.2	42	After receiving AT+CFUN=0 the module waits 2s before entering the power saving mode.
3.11.1	56	Corrected description (added ISO/IEC 7816-3)
5.1	70	Specified max. supply voltage BATT+. Deleted peak supply current. Modified explanation of absolute maximum ratings.
5.5.3	80	Corrected parameter compressor (receive): OFF
6.1	90	GND planes marked
6.2	91	Description of grounding modified.

Preceding document: "MC46 Hardware Interface Description" Version **02.8xa**
New document: "MC46 Hardware Interface Description" Version **V02.8xb**

Chapter	Page	What is new
7.2	97	Added chapter related to FCC certification.
3.4	35	More detailed description of GPRS Multislot Class change.

Preceding document: "MC46 Hardware Interface Description" Version **02.8x**
New document: "MC46 Hardware Interface Description" Version **02.8xa**

Chapter	Page	What is new
3.3.2.1	30	To keep /EMERGOFF pin and output pins of the serial interfaces from floating when in high impedance state use additional resistors.
3.3.2.3	31	Added example when /EMERGOFF might be needed.
3.12.2.2	60	LED mode of the SYNC pin recommended for testing and evaluating product design.
3.12.2.3	61	Recommendations for utilizing /RING0 line added.
4.1.1	65	More detailed information on how to connect the antenna ground pad.
5.4.1	77	More detailed description of current consumption during transmit burst. Added Smith chart.
5.3	71ff	Table 27 - /EMERGOFF pin and output pins of serial interface: To keep output pins from floating when in high impedance state use additional resistors.
5.6	84f	Table 34: Channel numbers of GSM 850 MHz frequency band corrected.

1 Introduction

This document describes the hardware interface of the Siemens MC46 module that connects to the cellular device application and the air interface. As MC46 is intended to integrate with a wide range of application platforms, all functional components are described in great detail.

So this guide covers all information you need to design and set up cellular applications incorporating the MC46 module. It helps you quickly retrieve interface specifications, electrical and mechanical details and, last but not least, information on the requirements to be considered for integrating further components.

1.1 Related documents

[1] MC45 / MC46 AT Command Set, Version 03.05
[2] MC46 Release Notes, Version 03.05
[3] GPRS Startup User's Guide
[4] Remote-SAT User's Guide
[5] DSB45 Support Box - Evaluation Kit for Siemens Cellular Engines
[6] Application Note 23: Installing MC45 / MC46 on DSB45
[7] Application Note 16: Upgrading MC45 / MC46 Firmware
[8] Application Note 14: Audio and Battery Parameter Download
[9] Application Note 02: Audio Interface Design
[10] Multiplexer User's Guide
[11] Multiplex Driver Developer’s Guide for Windows 2000 and Windows XP
[12] Multiplex Driver Installation Guide for Windows 2000 and Windows XP
[13] Application Note 22: Using TTY / CTM equipment
[14] Application Note 24: Application Developer’s Guide

Prior to using the MC46 engines or upgrading to a new firmware release, be sure to carefully read the latest product information.

To visit the Siemens Website you can use the following link:
http://www.siemens.com/wm

1.2 Terms and abbreviations

Abbreviation	Description
ADC	Analog-to-Digital Converter
AFC	Automatic Frequency Control
AGC	Automatic Gain Control
ANSI	American National Standards Institute
ARFCN	Absolute Radio Frequency Channel Number
ARP	Antenna Reference Point
ASC0 / ASC1	Asynchronous Controller. Abbreviations used for first and second serial interface of MC46
ASIC	Application Specific Integrated Circuit
B	Thermistor Constant
B2B	Board-to-board connector
BER	Bit Error Rate
BTS	Base Transceiver Station
CB or CBM	Cell Broadcast Message
CE	Conformité Européene (European Conformity)
CHAP	Challenge Handshake Authentication Protocol
CPU	Central Processing Unit
CS	Coding Scheme
CSD	Circuit Switched Data
CTS	Clear to Send
DAC	Digital-to-Analog Converter
DAI	Digital Audio Interface
dBm0	Digital level, 3.14dBm0 corresponds to full scale, see ITU G.711, A-law
DCE	Data Communication Equipment (typically modems, e.g. Siemens GSM engine)
DCS 1800	Digital Cellular System, also referred to as PCN
DRX	Discontinuous Reception
DSB	Development Support Box
DSP	Digital Signal Processor
DSR	Data Set Ready
DTE	Data Terminal Equipment (typically computer, terminal, printer or, for example, GSM application)
DTR	Data Terminal Ready
DTX	Discontinuous Transmission
EFR	Enhanced Full Rate
EGSM	Enhanced GSM
EMC	Electromagnetic Compatibility

Abbreviation	Description
ESD	Electrostatic Discharge
ETS	European Telecommunication Standard
FCC	Federal Communications Commission (U.S.)
FDMA	Frequency Division Multiple Access
FR	Full Rate
GMSK	Gaussian Minimum Shift Keying
GPRS	General Packet Radio Service
GSM	Global Standard for Mobile Communications
HiZ	High Impedance
HR	Half Rate
I/O	Input/Output
IC	Integrated Circuit
IMEI	International Mobile Equipment Identity
ISO	International Standards Organization
ITU	International Telecommunications Union
kbps	kbits per second
LED	Light Emitting Diode
Li-Ion	Lithium-Ion
Mbps	Mbits per second
MMI	Man Machine Interface
MO	Mobile Originated
MS	Mobile Station (GSM engine), also referred to as TE
MSISDN	Mobile Station International ISDN number
MT	Mobile Terminated
NTC	Negative Temperature Coefficient
OEM	Original Equipment Manufacturer
PA	Power Amplifier
PAP	Password Authentication Protocol
PBCCH	Packet Switched Broadcast Control Channel
PCB	Printed Circuit Board
PCL	Power Control Level
PCM	Pulse Code Modulation
PCN	Personal Communications Network, also referred to as DCS 1800
PCS	Personal Communication System, also referred to as GSM 1900
PDU	Protocol Data Unit
PLL	Phase Locked Loop
PPP	Point-to-point protocol

Abbreviation	Description
PSU	Power Supply Unit
R&TTE	Radio and Telecommunication Terminal Equipment
RAM	Random Access Memory
RF	Radio Frequency
RMS	Root Mean Square (value)
ROM	Read-only Memory
RTC	Real Time Clock
Rx	Receive Direction
SAR	Specific Absorption Rate
SELV	Safety Extra Low Voltage
SIM	Subscriber Identification Module
SMS	Short Message Service
SRAM	Static Random Access Memory
TA	Terminal adapter (e.g. GSM engine)
TDMA	Time Division Multiple Access
TE	Terminal Equipment, also referred to as DTE
Tx	Transmit Direction
UART	Universal asynchronous receiver-transmitter
URC	Unsolicited Result Code
USSD	Unstructured Supplementary Service Data
VSWR	Voltage Standing Wave Ratio
Phonebook abbreviations	
FD	SIM fixdialing phonebook
LD	SIM last dialing phonebook (list of numbers most recently dialed)
MC	Mobile Equipment list of unanswered MT calls (missed calls)
ME	Mobile Equipment phonebook
ON	Own numbers (MSISDNs) stored on SIM or ME
RC	Mobile Equipment list of received calls
SM	SIM phonebook

1.3 Type approval

MC46 has been approved to comply with the directives and standards listed below and is labeled with the CE conformity mark.

European directives

99/05/EC	"Directive of the European Parliament and of the council of 9 March 1999 on radio equipment and telecommunications terminal equipment and the mutual recognition of their conformity", in short referred to as R&TTE Directive 1999/5/EC
89/336/EC	Directive on electromagnetic compatibility
73/23/EC	Directive on electrical equipment designed for use within certain voltage limits (Low Voltage Directive)

Standards of North American Type Approval

CFR Title 47	"Code of Federal Regulations, Part 2 and Part 24 (Telecommunications, PCS)" US Equipment Authorization FCC
UL 60 950	"Product Safety Certification" (Safety requirements) c UL us
NAPRD.03	"Overview of PCS Type certification review board Mobile Equipment Type Certification and IMEI control" PCS Type Certification Review board (PTCRB)

Standards of European Type Approval

3GPP TS 51.010-1	"Digital cellular telecommunications system (Phase 2); Mobile Station (MS) conformance specification".
ETSI EN 301 511	"V7.0.1 (2000-12) Candidate Harmonized European Standard (Telecommunications series) Global System for Mobile communications (GSM); Harmonized standard for mobile stations in the GSM 900 and DCS 1800 bands covering essential requirements under article 3.2 of the R&TTE directive (1999/5/EC) (GSM 13.11 version 7.0.1 Release 1998)"
GCF-CC	"Global Certification Forum - Certification Criteria"
ETSI EN 301 489-1	"V1.1.1 (2000-09) Candidate Harmonized European Standard (Telecommunications series) Electro Magnetic Compatibility and Radio spectrum Matters (ERM); Electro Magnetic Compatibility (EMC) standard for radio equipment and services; Part 1: Common Technical Requirements"
ETSI EN 301 489-7	"V1.1.1 (2000-09) Candidate Harmonized European Standard (Telecommunications series) Electro Magnetic Compatibility and Radio spectrum Matters (ERM); Electro Magnetic Compatibility

	(EMC) standard for radio equipment and services; Part 7: Specific conditions for mobile and portable radio and ancillary equipment of digital cellular radio telecommunications systems (GSM and DCS)”
EN 60 950	Safety of information technology equipment (2000)

Requirements of quality

IEC 60068	Environmental testing
DIN EN 60529	IP codes

Compliance with international rules and regulations

Manufacturers of mobile or fixed devices incorporating MC46 modules are advised to have their completed product tested and approved for compliance with all applicable national and international regulations. As a tri-band GSM/GPRS engine designed for use on any GSM network in the world, MC46 is required to pass all approvals relevant to operation on the European and North American markets. For the North American market this includes the Rules and Regulations of the Federal Communications Commission (FCC) and PTCRB, for the European market the R&TTE Directives and GCF Certification Criteria must be fully satisfied.

The FCC Equipment Authorization granted to the MC46 Siemens reference application is valid *only* for the equipment described in Chapter 7.

SAR requirements specific to handheld mobiles

Mobile phones, PDAs or other handheld transmitters and receivers incorporating a GSM module must be in accordance with the guidelines for human exposure to radio frequency energy. This requires the Specific Absorption Rate (SAR) of handheld MC46 based applications to be evaluated and approved for compliance with national and/or international regulations.

Since the SAR value varies significantly with the individual product design manufacturers are advised to submit their product for approval. For European and US markets the relevant directives are mentioned below. It is the responsibility of the manufacturer of the final product to verify whether or not further standards, recommendations of directives are in force outside these areas.

Products intended for sale on US markets

ES 59005/ANSI C95.1	Considerations for evaluation of human exposure to Electromagnetic Fields (EMFs) from Mobile Telecommunication Equipment (MTE) in the frequency range 30MHz-6GHz

Products intended for sale on European markets

EN 50360	Product standard to demonstrate the compliance of mobile phones with the basic restrictions related to human exposure to electromagnetic fields (300 MHz - 3 GHz)

1.4 Safety precautions

The following safety precautions must be observed during all phases of the operation, usage, service or repair of any cellular terminal or mobile incorporating MC46. Manufacturers of the cellular terminal are advised to convey the following safety information to users and operating personnel and to incorporate these guidelines into all manuals supplied with the product. Failure to comply with these precautions violates safety standards of design, manufacture and intended use of the product. Siemens AG assumes no liability for customer failure to comply with these precautions.

When in a hospital or other health care facility, observe the restrictions on the use of mobiles. Switch the cellular terminal or mobile off, if instructed to do so by the guidelines posted in sensitive areas. Medical equipment may be sensitive to RF energy.

The operation of cardiac pacemakers, other implanted medical equipment and hearing aids can be affected by interference from cellular terminals or mobiles placed close to the device. If in doubt about potential danger, contact the physician or the manufacturer of the device to verify that the equipment is properly shielded. Pacemaker patients are advised to keep their hand-held mobile away from the pacemaker, while it is on.

Switch off the cellular terminal or mobile before boarding an aircraft. Make sure it cannot be switched on inadvertently. The operation of wireless appliances in an aircraft is forbidden to prevent interference with communications systems. Failure to observe these instructions may lead to the suspension or denial of cellular services to the offender, legal action, or both.

Do not operate the cellular terminal or mobile in the presence of flammable gases or fumes. Switch off the cellular terminal when you are near petrol stations, fuel depots, chemical plants or where blasting operations are in progress. Operation of any electrical equipment in potentially explosive atmospheres can constitute a safety hazard.

Your cellular terminal or mobile receives and transmits radio frequency energy while switched on. Remember that interference can occur if it is used close to TV sets, radios, computers or inadequately shielded equipment. Follow any special regulations and always switch off the cellular terminal or mobile wherever forbidden, or when you suspect that it may cause interference or danger.

Road safety comes first! Do not use a hand-held cellular terminal or mobile when driving a vehicle, unless it is securely mounted in a holder for handsfree operation. Before making a call with a hand-held terminal or mobile, park the vehicle.

Handsfree devices must be installed by qualified personnel. Faulty installation or operation can constitute a safety hazard.

SOS

IMPORTANT!
Cellular terminals or mobiles operate using radio signals and cellular networks cannot be guaranteed to connect in all conditions. Therefore, you should never rely solely upon any wireless device for essential communications, for example emergency calls.

Remember, in order to make or receive calls, the cellular terminal or mobile must be switched on and in a service area with adequate cellular signal strength.

Some networks do not allow for emergency calls if certain network services or phone features are in use (e.g. lock functions, fixed dialing etc.). You may need to deactivate those features before you can make an emergency call.

Some networks require that a valid SIM card be properly inserted in the cellular terminal or mobile.

2 Product concept

Designed for use on any GSM network in the world, Siemens MC46 is a tri-band GSM/GPRS engine that works on the three frequencies GSM 850 MHz, GSM 1800 MHz and GSM 1900 MHz. MC46 features GPRS multislot class 10 and supports the GPRS coding schemes CS-1, CS-2, CS-3 and CS-4.

To save space on the application platform, MC46 comes as an extremely slim and compact module. This makes it ideally suited for a broad range of mobile computing devices, such as laptops, notebooks, multimedia appliances, and particularly offers easy integration with PDAs, pocket organizers or miniature mobile phones.

The tiny MC46 module incorporates all you need to create high-performance GSM/GPRS solutions: baseband processor, power supply ASIC, complete radio frequency circuit including a power amplifier and antenna interface. The power amplifier is directly fed from the supply voltage BATT+. The MC46 software is residing in a flash memory device. An additional SRAM enables MC46 to meet the demanding requirements of GPRS connectivity.

The physical interface to the cellular application is made through a board-to-board connector. It consists of 50 pins, required for controlling the unit, transferring data and audio signals and providing power supply lines.

MC46 comprises two serial interfaces (ASC0 and ASC1) giving you maximum flexibility for easy integration with the Man-Machine Interface (MMI).

An extremely versatile audio concept offers various audio interfaces, each available on the board-to-board connector: a digital audio interface (DAI) and two analog audio interfaces. This allows you to connect up to three audio devices in any combination, all at the same time. Using AT commands you can easily switch back and forth and select different audio modes.

The external dual-band or triple-band antenna can be connected optionally to a connector on the top side or to a pad on the bottom side.

The power saving technique minimizes current consumption to as low as 3mA. In SLEEP mode, MC46 is able to wake up on demand and to resume power saving automatically if no activity is required.

For battery powered applications, MC46 features a charging control which can be used to charge a Li-Ion battery. The charging circuit must be implemented outside the module on the application platform.

2.1 MC46 key features at a glance

Table 1: MC46 key features

Feature	Implementation
Power supply	Single supply voltage 3.2V – 4.5V
Power saving	Minimizes power consumption in SLEEP mode to 3mA
Charging	Supports charging control for Li-Ion battery
Frequency bands	• Tri-band GSM 850, GSM 1800, GSM 1900 • Compliant to GSM Phase 2/2+
GSM class	Small MS
Transmit power	• Class 4 (2W) at GSM 850 • Class 1 (1W) at GSM 1800 and GSM 1900
GPRS connectivity	• GPRS multi-slot class 10 • GPRS mobile station class B
SIM interface	• Supported SIM card: 3V • External SIM card reader has to be connected via interface connector (note that card reader is not part of MC46)
External antenna	Connected via 50Ω antenna connector or antenna pad
Audio interfaces	Two analog audio interfaces, one digital audio interface (DAI)
Audio features	Speech codec modes: • Half Rate (ETS 06.20) • Full Rate (ETS 06.10) • Enhanced Full Rate (ETS 06.50 / 06.60 / 06.80) • Adaptive Multi Rate (AMR) Handsfree operation • Echo cancellation • Noise reduction
Two serial interfaces: ASC0, ASC1	• 2.65V level, bi-directional bus for AT commands and data • ASC0 – full-featured 8-wire serial interface. Supports RTS0/CTS0 hardware handshake and software XON/XOFF flow control. Multiplex ability according to GSM 07.10 Multiplexer Protocol. • ASC1 - 4-wire serial interface. Supports RTS1/CTS1 hardware handshake and software XON/XOFF flow control. • Baud rate: 300bps ... 230kbps on ASC0 and ASC1 • Autobauding (on ASC0 only) detects 1200, 2400, 4800, 9600, 19200, 38400, 57600, 115200, 230400 bps
DATA *GPRS:*	• GPRS data downlink transfer: max. 85.6 kbps (see Table 2) • GPRS data uplink transfer: max. 42.8 kbps (see Table 2) • Coding scheme: CS-1, CS-2, CS-3 and CS-4 • MC46 supports the two protocols PAP (Password Authentication Protocol) and CHAP (Challenge Handshake Authentication Protocol) commonly used for PPP connections. • Support of Packet Switched Broadcast Control Channel (PBCCH) allows

Feature	Implementation
	you to benefit from enhanced GPRS performance when offered by the network operators.
CSD:	• CSD transmission rates: 2.4, 4.8, 9.6, 14.4 kbps, non-transparent, V.110
WAP:	• WAP compliant
SMS	• MT, MO, CB, Text and PDU mode • SMS storage: SIM card plus 25 SMS locations in the mobile equipment • Transmission of SMS alternatively over CSD or GPRS. Preferred mode can be user-defined.
FAX	Group 3: Class 1, Class 2
USSD	Unstructured Supplementary Services Data (USSD) support
Phonebook management	Supported phonebook types: SM, FD, LD, MC, RC, ON, ME
SIM Application Toolkit	Supports SAT class 3, GSM 11.14 Release 98
Ringing tones	Offers a choice of 7 different ringing tones / melodies, easily selectable with AT command
Real time clock	Implemented
Timer function	Programmable via AT command
Support of TTY/CTM	To benefit from TTY communication via GSM, CTM equipment can be connected to one of the three audio interfaces.
Temperature range Temperature control and auto switch-off	• Normal operation: -20°C to +55°C • Restricted operation: -25°C to -20°C and +55°C to +70°C • Constant temperature control prevents damage to MC46 when the specified temperature is exceeded. When an emergency call is in progress the automatic temperature shutdown functionality is deactivated.
Physical characteristics	Size: 53 ±0.15 x 34 ±0.15 x 3.5±0.3 mm Weight: 10g
Firmware upgrade	Firmware upgradable over serial interface and SIM interface
Evaluation kit	The DSB45 Support Box is an evaluation kit designed to test and type approve Siemens cellular engines and provide a sample configuration for application engineering. See Chapter 8 for ordering information.

Table 2: Coding schemes and maximum net data rates over air interface

Coding scheme	1 Timeslot	2 Timeslots	4 Timeslots
CS-1:	9.05 kbps	18.1 kbps	36.2 kbps
CS-2:	13.4 kbps	26.8 kbps	53.6 kbps
CS-3:	15.6 kbps	31.2 kbps	62.4 kbps
CS-4:	21.4 kbps	42.8 kbps	85.6 kbps

Please note that the values stated above are maximum ratings which, in practice, are influenced by a great variety of factors, primarily, for example, traffic variations and network coverage.

2.2 Circuit concept

Figure 1 shows a block diagram of the MC46 module and illustrates the major functional components:

GSM / GPRS baseband block:
- Baseband controller operating at 26MHz
- Power supply ASIC
- Flash
- SRAM
- Application interface (board-to-board connector)

GSM RF block:
- RF transceiver
- RF power amplifier
- RF frontend (antenna connector)

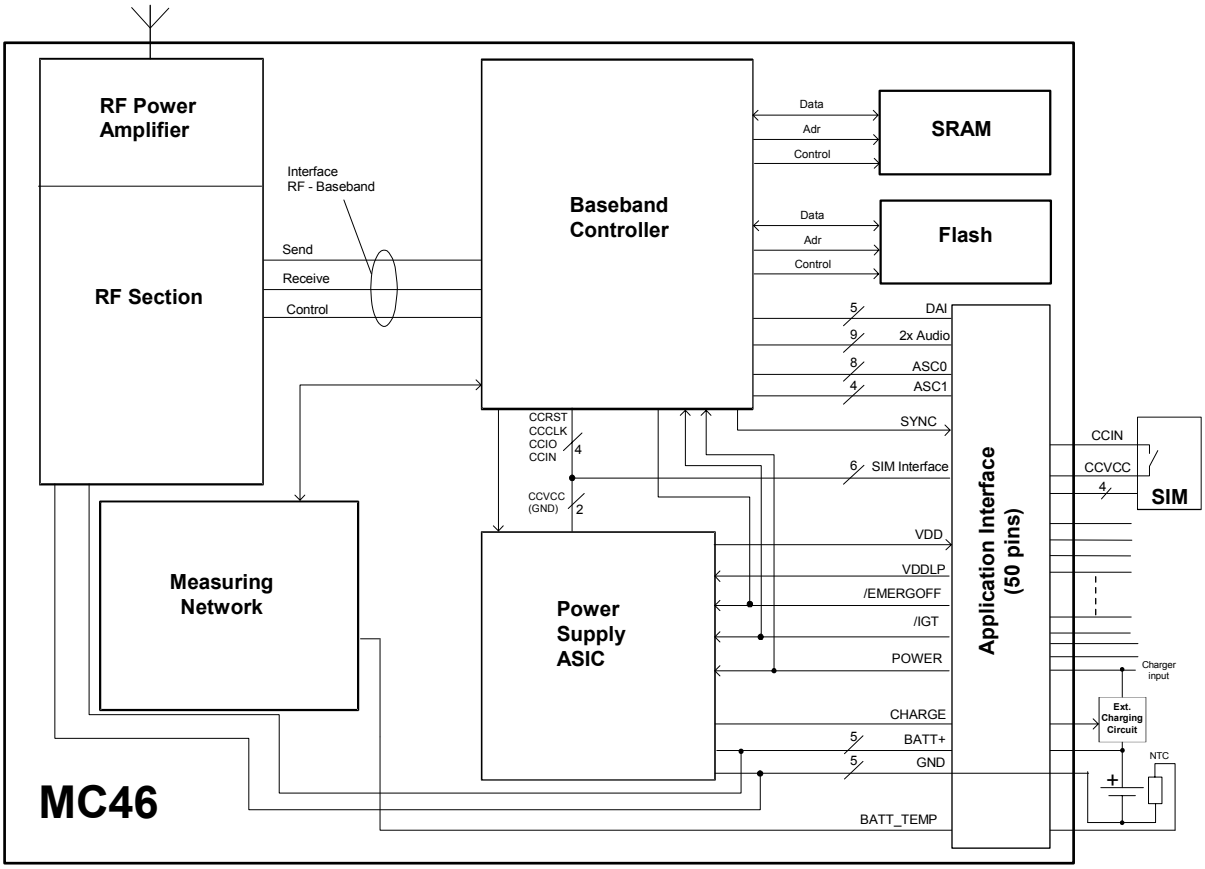

Figure 1: MC46 block diagram

3 Application Interface

MC46 is equipped with a 50-pin 0.5mm pitch board-to-board connector that connects to the cellular application platform. The host interface incorporates several sub-interfaces described in the following chapters:

- Power supply and charging control (see Chapters 3.2 and 3.3)
- Dual serial interface (see Chapter 3.9)
- Two analog audio interfaces and a digital audio interface (see Chapter 3.10)
- SIM interface (see Chapter 3.11)

Electrical and mechanical characteristics of the board-to-board connector are specified in Chapter 6.3. Ordering information for mating connectors and cables are included.

3.1 Operating modes

The table below briefly summarizes the various operating modes referred to in the following chapters.

Table 3: Overview of operating modes

Mode	Function	
Normal operation	GSM / GPRS SLEEP	Various powersave modes set with AT+CFUN command. Software is active to minimum extent. If the module was registered to the GSM network in IDLE mode, it is registered and paging with the BTS in SLEEP mode, too. Power saving can be chosen at different levels: The NON-CYCLIC SLEEP mode (AT+CFUN=0) disables the AT interface. The CYCLIC SLEEP modes AT+CFUN=5, 6, 7 and 8 alternatingly activate and deactivate the AT interfaces to allow permanent access to all AT commands.
	GSM IDLE	Software is active. Once registered to the GSM network, paging with BTS is carried out. The module is ready to send and receive.
	GSM TALK	Connection between two subscribers is in progress. Power consumption depends on network coverage individual settings, such as DTX off/on, FR/EFR/HR, hopping sequences, antenna.
	GPRS IDLE	Module is ready for GPRS data transfer, but no data is currently sent or received. Power consumption depends on network settings and GPRS configuration (e.g. multislot settings).
	GPRS DATA	GPRS data transfer in progress. Power consumption depends on network settings (e.g. power control level), uplink / downlink data rates and GPRS configuration (e.g. used multislot settings).
POWER DOWN	Normal shutdown after sending the AT^SMSO command. The Power Supply ASIC (PSU-ASIC) disconnects the supply voltage from the baseband part of the circuit. Only a voltage regulator in the PSU-ASIC is active for powering the RTC. Software is not active. The serial interfaces are not accessible. Operating voltage (connected to BATT+) remains applied.	
Alarm mode	Restricted operation launched by RTC alert function while the module is in POWER DOWN mode. Module will not be registered to GSM network. Limited number of AT commands is accessible.	

Mode	Function
Charge-only mode	Limited operation for battery powered applications. Enables charging while module is detached from GSM network. Limited number of AT commands is accessible. There are several ways to launch Charge-only mode: • From POWER DOWN mode: Connect charger to the charger input pin of the external charging circuit and the module's POWER pin when MC46 was powered down by AT^SMSO. • From Normal mode: Connect charger to the charger input pin of the external charging circuit and the module's POWER pin, then enter AT^SMSO.
Charge mode during normal operation	Normal operation (SLEEP, IDLE, TALK, GPRS IDLE, GPRS DATA) and charging running in parallel. Charge mode changes to Charge-only mode when the module is powered down before charging has been completed.

See Table 11 and Table 12 for the various options of waking up MC46 and proceeding from one mode to another.

3.2 Power supply

The power supply of MC46 has to be a single voltage source of V_{BATT+}= 3.2V...4.5V. It must be able to provide sufficient current in a transmit burst which typically rises to 2A. Beyond that, the power supply must be able to account for increased current consumption if the module is exposed to inappropriate conditions, for example antenna mismatch. For further details see Chapters 3.2.2 and 5.4.1.

All the key functions for supplying power to the device are handled by an ASIC power supply. The ASIC provides the following features:

- Stabilizes the supply voltages for the GSM baseband using low drop linear voltage regulators.
- Controls the module's power up and power down procedures.
  A watchdog logic implemented in the baseband processor periodically sends signals to the ASIC, allowing it to maintain the supply voltage for all digital MC46 components. Whenever the watchdog pulses fail to arrive constantly, the module is turned off.
- Delivers, across the VDD pin, a regulated voltage of 2.9V. The output voltage VDD may be used to supply, for example, an external LED or a level shifter. However, the external circuitry must not cause any spikes or glitches on voltage VDD. This voltage is not available in POWER DOWN mode. Therefore, the VDD pin can be used to indicate whether or not MC46 is in POWER DOWN mode.
- Provides power to the SIM interface.

The RF power amplifier is driven directly from BATT+.

3.2.1 Power supply pins on the board-to-board connector

Five BATT+ pins of the board-to-board connector are dedicated to connect the supply voltage, five GND pins are recommended for grounding. The values stated below must be measured directly at the reference points on the MC46 board (TP BATT+ and TP GND illustrated in Figure 40).

The POWER and CHARGE pins serve as control signals for charging a Li-Ion battery. VDDLP can be used to back up the RTC.

Table 4: Power supply pins of board-to-board connector

Signal name	I/O	Description	Parameter
BATT+	I/O	Positive operating voltage Reference points are the test points	3.2 V...4.5 V, $I_{typ} \leq 2$ A during transmit burst The minimum operating voltage must not fall below 3.2 V, not even in case of voltage drop.
GND	-	Ground	0 V
POWER	I	This line signalizes to the processor that the charger is connected.	
CHARGE	O	Control signal for external charging transistor	
VDDLP	I/O	Can be used to back up the RTC when V_{BATT+} is not applied. See Chapter 3.8	$U_{OUT,max} < V_{BATT+}$ U_{IN} = 2.0 V...5.5 V R_i = 1kΩ $I_{in,max}$ = 30µA

3.2.2 Minimizing power losses

When designing the power supply for your application please pay specific attention to power losses. Ensure that the input voltage V_{BATT+} never drops below 3.2 V on the MC46 board, not even in a transmit burst where current consumption can rise to typical peaks of 2A. It should be noted that MC46 switches off when exceeding these limits. Any voltage drops that may occur in a transmit burst should not exceed 400mV. For further details see Chapter 5.4.

The best approach to reducing voltage drops is to use a board-to-board connection as recommended, and a low impedance power source. The resistance of the power supply lines on the host board and of a battery pack should also be considered.

Note: If the application design requires an adapter cable between both board-to-board connectors, use a flex cable as short as possible in order to minimize power losses.

Example: If the length of the flex cable reaches the maximum length of 200mm, this connection may cause, for example, a resistance of 50mΩ in the BATT+ line and 50mΩ in the GND line. As a result, a 2A transmit burst would add up to a total voltage drop of 200mV. Plus, if a battery pack is involved, further losses may occur due to the resistance across the battery lines and the internal resistance of the battery.

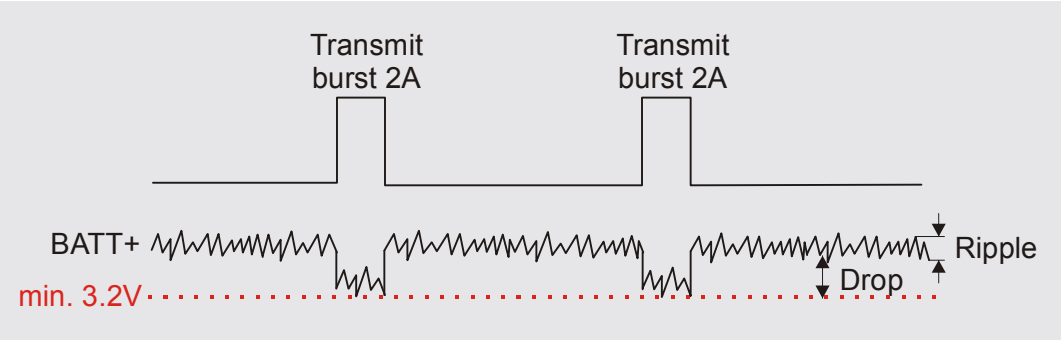

Figure 2: Power supply limits during transmit burst

The input voltage V_{BATT+} must be measured directly at the test points on the MC46 board (TP BATT+ and TP GND illustrated in Figure 40).

3.2.3 Monitoring power supply

To help you monitor the supply voltage you can use the AT^SBV command which returns the voltage measured at TP BATT+ and GND.

The voltage is continuously measured at intervals depending on the operating mode on the RF interface. The duration of measuring ranges from 0.5s in TALK/DATA mode to 50s when MC46 is deregistered. The displayed voltage (in mV) is averaged over the last measuring period before the AT^SBV command was executed.

For details please refer to [1].

3.3 Power up / down scenarios

In general, be sure not to turn on MC46 while it is out of the operating range of voltage and temperature stated in Chapters 5.2 and 5.3. MC46 would immediately switch off after having started and detected these inappropriate conditions.

3.3.1 Turn on MC46

MC46 can be activated in a variety of ways, which are described in the following chapters:

- via ignition line /IGT: starts normal operating state (see Chapters 3.3.1.1 and 3.3.1.2)
- via POWER line: starts charging algorithm (see Chapters 3.5.3 and 3.3.1.3)
- via RTC interrupt: starts Alarm mode (see Chapter 3.3.1.4)

3.3.1.1 Turn on MC46 using the ignition line /IGT (Power on)

To switch on MC46 the /IGT (Ignition) signal needs to be driven to ground level for at least 100ms and not earlier than 10ms after the last falling edge of VDD. This can be accomplished using an open drain/collector driver in order to avoid current flowing into this pin.

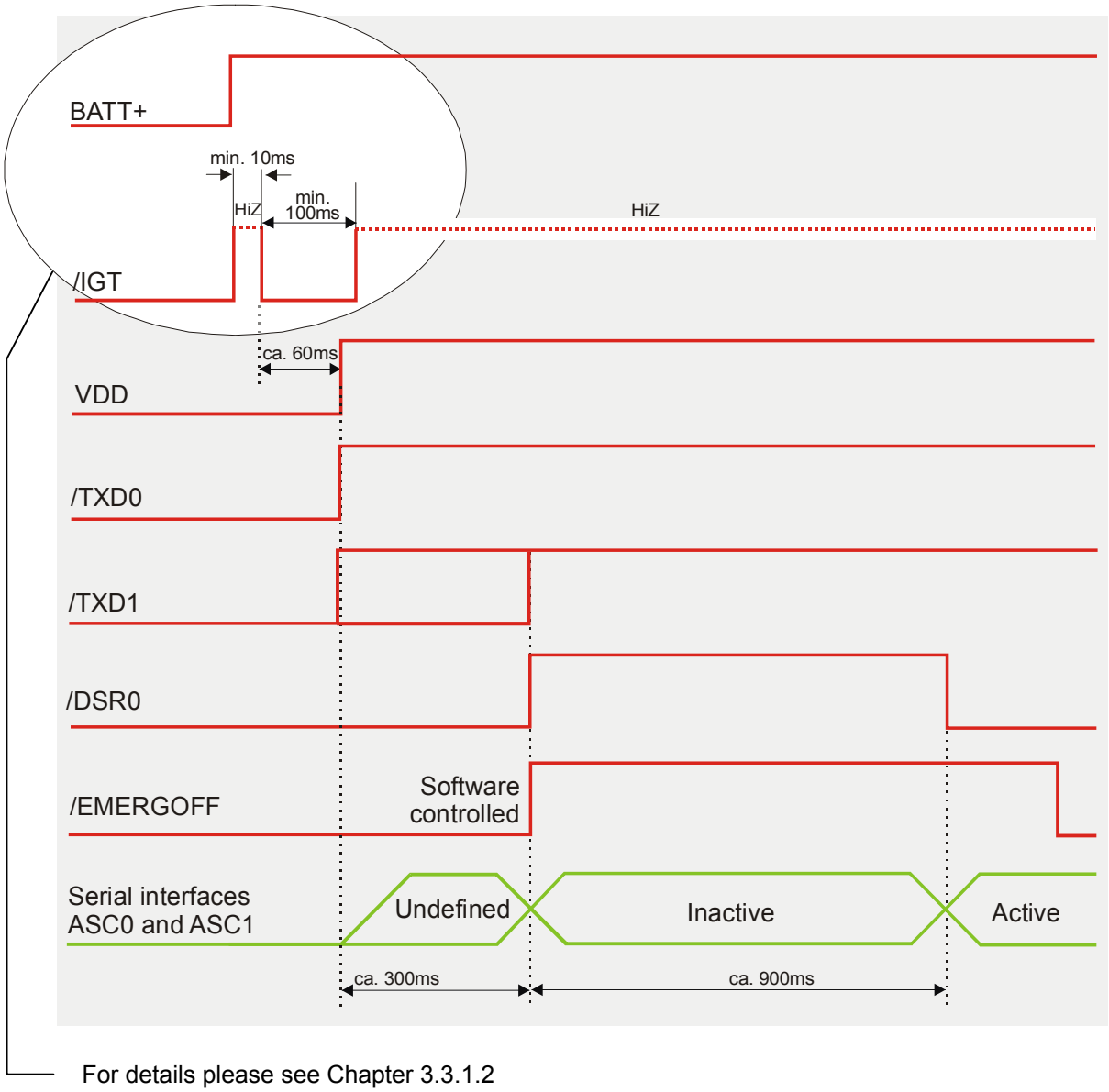

Figure 3: Power-on by ignition signal

If configured to a fix baud rate, MC46 will send the result code ^SYSSTART to indicate that it is ready to operate. This result code does not appear when autobauding is active. See Chapter AT+IPR in [1].

In a battery operated MC46 application, the duration of the /IGT signal must be 1s minimum when the charger is connected and you may want to go from charging to Normal mode.

3.3.1.2 Timing of the ignition process

When designing your application platform take into account that powering up MC46 requires the following steps.

- The ignition line cannot be operated until V_{BATT+} passes the level of 3.0V.
- The ignition line shall not be operated earlier than 10ms after the last falling edge of VDD.
- 10ms after V_{BATT+} has reached 3.0V the ignition line can be switched low. The duration of the falling edge must not exceed 1ms.
- Another 100ms are required to power up the module.
- Ensure that V_{BATT+} does not fall below 3.0V while the ignition line is driven. Otherwise the module cannot be activated.
- If the VDDLP line is fed from an external power supply as explained in Chapter 3.8, the /IGT line is HiZ before the rising edge of BATT+.

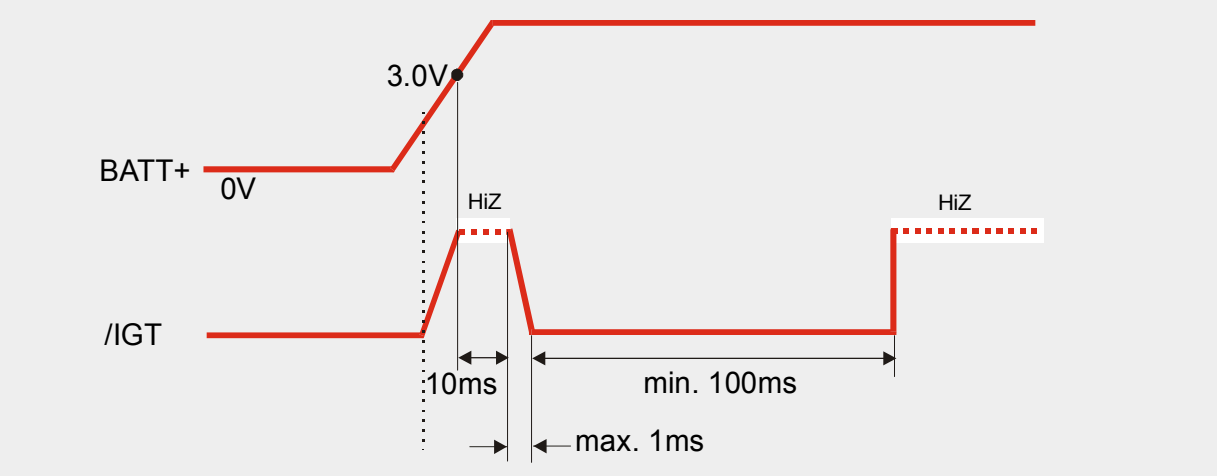

Figure 4: Timing of power-on process if VDDLP is not used

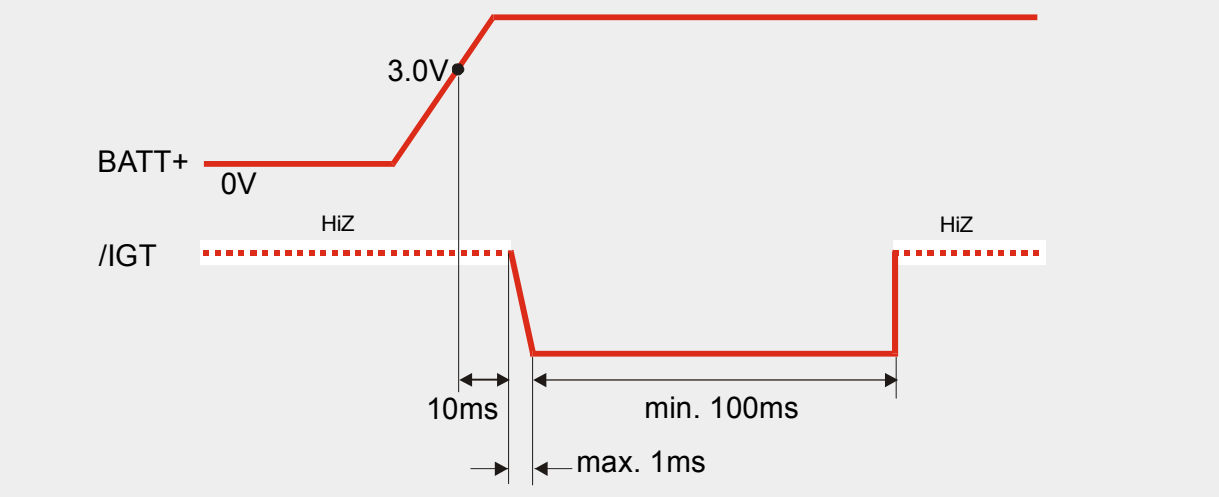

Figure 5: Timing of power-on process if VDDLP is fed from external source

3.3.1.3 Turn on MC46 using the POWER signal

As detailed in Chapter 3.5.3, the charging adapter can be connected regardless of the module's operating mode (except for Alarm mode).

If the charger is connected to the charger input of the external charging circuit and the module's POWER pin while MC46 is off, processor controlled fast charging starts (see Chapter 3.5.2). MC46 enters a restricted mode, referred to as Charge-only mode where only the charging algorithm will be launched.

During the Charge-only mode MC46 is neither logged on to the GSM network nor are the serial interfaces fully accessible. To switch to normal operation and log on to the GSM network, the /IGT line needs to be activated.

3.3.1.4 Turn on MC46 using the RTC (Alarm mode)

Another power-on approach is to use the RTC, which is constantly supplied with power from a separate voltage regulator in the power supply ASIC. The RTC provides an alert function which allows to wake up MC46 while power is off. To prevent the engine from unintentionally logging into the GSM network, this procedure only enables restricted operation, referred to as Alarm mode. It must not be confused with a wake-up or alarm call that can be activated by using the same AT command, but without switching off power.

Use the *AT+CALA* command to set the alarm time. The RTC retains the alarm time if MC46 was powered down by AT^SMSO. Once the alarm is timed out and executed, MC46 enters into the Alarm mode. This is indicated by an Unsolicited Result Code (URC) which reads:

^SYSSTART ALARM MODE

Note that this URC is the only indication of the Alarm mode and will not appear when autobauding was activated (due to the missing synchronization between DTE and DCE upon start-up). Therefore, it is recommended to select a fixed baud rate before using the Alarm mode. In Alarm mode only a limited number of AT commands is available. For further instructions refer to the AT Command Set.

Table 5: AT commands available in Alarm mode

AT command	Use
AT+CALA	Set alarm time
AT+CCLK	Set date and time of RTC
AT^SBC	In Alarm mode, you can only query the present current consumption and check whether or not a charger is connected. The battery capacity is returned as 0, regardless of the actual voltage (since the values measured directly on the cell are not delivered to the module).
AT^SCTM	Query temperature range, enable/disable URCs to report critical temperature ranges
AT^SMSO	Power down GSM engine

For the GSM engine to change from the Alarm mode to full operation (normal operating mode) it is necessary to drive the ignition line to ground. This must be implemented in your host application as described in Chapter 3.3.1.1.

If your host application uses the SYNC pin to control a status LED as described in Chapter 3.12.2.2, please note that the LED is off while the GSM engine is in Alarm mode.

3.3.2 Turn off MC46

To switch the module off the following procedures may be used:

- *Normal shutdown procedure*: Software controlled by sending the AT^SMSO command over the serial application interface. See Chapter 3.3.2.1.

- *Emergency shutdown*: Hardware driven by switching the /EMERGOFF line of the board-to-board-connector to ground = immediate shutdown of supply voltages, only applicable if the software controlled procedure fails! See Chapter 3.3.2.3.

- *Automatic shutdown*: See Chapter 3.3.3
  a) Takes effect if undervoltage is detected.
  b) Takes effect if MC46 board temperature exceeds critical limit.

3.3.2.1 Turn off MC46 using AT command

The best and safest approach to powering down MC46 is to issue the *AT^SMSO* command. This procedure lets MC46 log off from the network and allows the software to enter into a secure state and safe data before disconnecting the power supply. The mode is referred to as POWER DOWN mode. In this mode, only the RTC stays active.

Before switching off the device sends the following response:

^SMSO: MS OFF

OK
^SHUTDOWN

After sending AT^SMSO do not enter any other AT commands. There are two ways to verify when the module turns off:

- Wait for the URC “^SHUTDOWN”. It indicates that all important data have been stored to the Flash and that the complete system turns off in less than 1 second.
- Also, you can monitor the VDD pin. The low state of VDD definitely indicates that the module is switched off.

Be sure not to disconnect the operating voltage V_{BATT+} before the URC “^SHUTDOWN” has been issued or the VDD signal has gone low. Otherwise you run the risk of losing data.

While MC46 is in POWER DOWN mode the application interface is switched off and must not be fed from any other source. Therefore, your application must be designed to avoid any current flow into any digital pins of the application interface.

Note: In POWER DOWN mode, the /EMERGOFF pin, the output pins of the ASC0 interface /RXD0, /CTS0, /DCD0, /DSR0, /RING0 and the output pins of the ASC1 interface /RXD1 and /CTS1 are switched to high impedance state.
If this causes the associated input pins of your application to float, you are advised to integrate an additional resistor (100 kΩ – 1 MΩ) at each line. In the case of the /EMERGOFF pin use a pull-down resistor tied to GND. In the case of the serial interface pins you can either connect pull-up resistors to the VDD line, or pull-down resistors to GND.

3.3.2.2 Maximum number of turn-on / turn-off cycles

Each time the module is shut down, data will be written from volatile memory to flash memory. The guaranteed maximum number of write cycles is limited to 100.000.

3.3.2.3 Emergency shutdown using /EMERGOFF pin

Caution: *Use the /EMERGOFF pin only when, due to serious problems, the software is not responding for more than 5 seconds. Pulling the /EMERGOFF pin causes the loss of all information stored in the volatile memory since power is cut off immediately. Therefore, this procedure is intended only for use in case of emergency, e.g. if the host controller experienced a watchdog reset and afterwards MC46 fails to shut down properly or fails to respond.*

The /EMERGOFF signal is available on the board-to-board connector. To control the /EMERGOFF line it is recommended to use an open drain / collector driver. To turn the GSM engine off, the /EMERGOFF line has to be driven to ground for ≥ 3.2s.

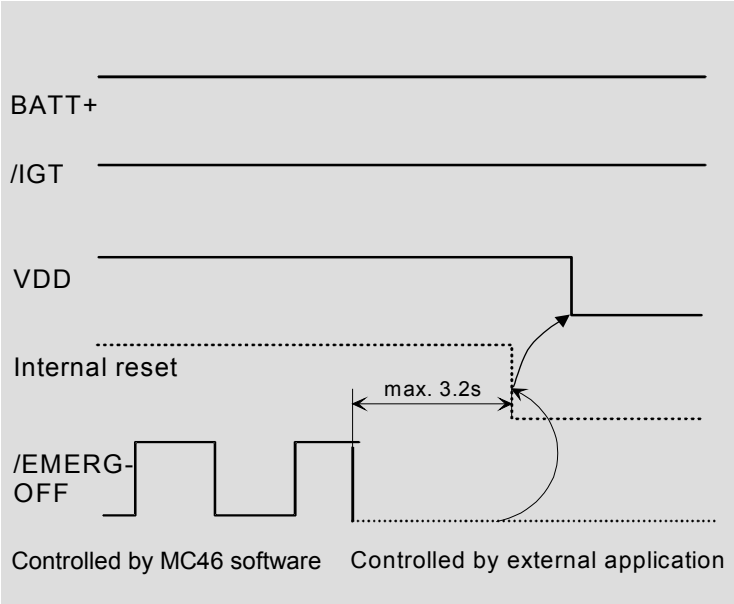

Figure 6: Deactivating GSM engine by /EMERGOFF signal

How does it work:

- Voltage V_{batt+} is permanently applied to the module.
- The module is active while the internal reset signal is kept at high level.
  During operation of MC46 the baseband controller generates watchdog pulses at regular intervals.
  Once the EMERGOFF pin is grounded these watchdog pulses are cut off from the power supply ASIC. The power supply ASIC shuts down the internal supply voltages of MC46 after max. 3.2s and the module turns off. Consequently, the output voltage at VDD is switched off.

3.3.3 Automatic shutdown

Automatic shutdown takes effect if

- the MC46 board is exceeding the critical limits of overtemperature or undertemperature
- the battery is exceeding the critical limits of overtemperature or undertemperature
- undervoltage is detected

The automatic shutdown procedure is equivalent to the power-down initiated with the AT^SMSO command, i.e. MC46 logs off from the network and the software enters a secure state avoiding loss of data. NOTE: This is not true for overvoltage conditions, and if an unrecoverable hardware or software error occurs, see below for details

Alert messages transmitted before the device switches off are implemented as Unsolicited Result Codes (URCs). The presentation of these URCs can be enabled or disabled with the two AT commands AT^SBC and AT^SCTM. The URC presentation mode varies with the condition, please see Chapters 3.3.3.1 to 3.3.3.4 for details. For further instructions on AT commands refer to [1].

3.3.3.1 Temperature dependent shutdown

The board temperature is constantly monitored by an internal NTC resistor located on the PCB. The NTC that detects the battery temperature must be part of the battery pack circuit as described in Chapter 3.5. The values detected by either NTC resistor are measured directly on the board or the battery and therefore, are not fully identical with the ambient temperature.

Each time the board or battery temperature goes out of range or back to normal, MC46 instantly displays an alert (if enabled).

- URCs indicating the level "1" or "-1" allow the user to take appropriate precautions, such as protecting the module from exposure to extreme conditions. The presentation of the URCs depends on the settings selected with the AT^SCTM write command:
  AT^SCTM=1: Presentation of URCs is always enabled.
  AT^SCTM=0 (default): Presentation of URCs is enabled for 15 seconds time after start-up of MC46. After 15 seconds operation, the presentation will be disabled, i.e. no alert messages can be generated.
- URCs indicating the level "2" or "-2" are instantly followed by an orderly shutdown. The presentation of these URCs is always enabled, i.e. they will be output even though the factory setting AT^SCTM=0 was never changed.

The maximum temperature ratings are stated in Table 26. Refer to Table 6 for the associated URCs. All statements are based on test conditions according to IEC 60068-2-2 (still air).

Table 6: Temperature dependent behavior

Sending temperature alert (15 s after start-up, otherwise only if URC presentation enabled)	
^SCTM_A: 1	Caution: T_{amb} of battery close to overtemperature limit.
^SCTM_B: 1	Caution: T_{amb} of board close to overtemperature limit.
^SCTM_A: -1	Caution: T_{amb} of battery close to undertemperature limit.
^SCTM_B: -1	Caution: T_{amb} of board close to undertemperature limit.
^SCTM_A: 0	Battery back to uncritical temperature range.
^SCTM_B: 0	Board back to uncritical temperature range.
Automatic shutdown (URC appears no matter whether or not presentation was enabled)	
^SCTM_A: 2	Alert: T_{amb} of battery equal or beyond overtemperature limit. MC46 switches off.
^SCTM_B: 2	Alert: T_{amb} of board equal or beyond overtemperature limit. MC46 switches off.
^SCTM_A: -2	Alert: T_{amb} of battery equal or below undertemperature limit. MC46 switches off.
^SCTM_B: -2	Alert: T_{amb} of board equal or below undertemperature limit. MC46 switches off.

3.3.3.2 Temperature control during emergency call

If the temperature limit is exceeded while an emergency call is in progress the engine continues to measure the temperature, but deactivates the shutdown functionality. If the temperature is still out of range when the call ends, the module switches off immediately (without another alert message).

3.3.3.3 Undervoltage shutdown if battery NTC is present

In applications where the module's charging technique is used and an NTC is connected to the BATT_TEMP terminal, the software constantly monitors the applied voltage. If the measured battery voltage is no more sufficient to set up a call the following URC will be presented:

^SBC: Undervoltage.

The message will be reported, for example, when you attempt to make a call while the voltage is close to the critical limit and further power loss is caused during the transmit burst. To remind you that the battery needs to be charged soon, the URC appears several times before the module switches off.

To enable or disable the URC use the AT^SBC command. The URC will be enabled when you enter the write command and specify the power consumption of your GSM application. Step by step instructions are provided in [1].

3.3.3.4 Undervoltage shutdown if no battery NTC is present

The undervoltage protection is also effective in applications, where no NTC connects to the BATT_TEMP terminal. Thus, you can take advantage of this feature even though the application handles the charging process or MC46 is fed by a fixed supply voltage. All you need to do is executing the write command AT^SBC=<current> which automatically enables the presentation of URCs. You do not need to specify <current>.

Whenever the supply voltage falls below the specified value (see Table 28) the URC
^SBC: Undervoltage
appears several times before the module switches off.

3.3.3.5 Overvoltage shutdown

For overvoltage conditions, no software controlled shutdown is implemented. If the supply voltage exceeds the maximum value specified in Table 28, loss of data and even unrecoverable hardware damage can occur.

Keep in mind that several MC46 components are directly linked to BATT+ and, therefore, the supply voltage remains applied at major parts of MC46. Especially the power amplifier is very sensitive to high voltage and might even be destroyed.

3.4 Automatic GPRS Multislot Class change

Temperature control is also effective for operation in GPRS Multislot Class 10. If the board temperature increases to the limit specified for restricted operation[1)] while data are transmitted over GPRS, the module automatically reverts from GPRS Multislot Class 10 (2 Tx) to Class 8 (1Tx). This reduces the power consumption and, consequently, causes the board's temperature to decrease. Once the temperature drops to a value of 5 degrees below the limit of restricted operation, MC46 returns to the higher Multislot Class. If the temperature stays at the critical level or even continues to rise, MC46 will not switch back to the higher class.

After a transition from Multislot Class 10 to Multislot Class 8 a possible switchback to Multislot Class 10 is blocked for one minute.

Please note that there is not one single cause of switching over to a lower GPRS Multislot Class. Rather it is the result of an interaction of several factors, such as the board temperature that depends largely on the ambient temperature, the operating mode and the transmit power. Furthermore, take into account that there is a delay until the network proceeds to a lower or, accordingly, higher Multislot Class. The delay time is network dependent. In extreme cases, if it takes too much time for the network and the temperature cannot drop due to this delay, the module may even switch off as described in Chapter 3.3.3.1.

[1)] See Table 26 for temperature limits known as restricted operation.

3.5 Charging control

MC46 integrates a charging management for Li-Ion batteries. You can skip this chapter if charging is not your concern, or if you are not using the implemented charging algorithm.

MC46 has no on-board charging circuit. To benefit from the implemented charging management you are required to install a charging circuit within your application. In this case, MC46 needs to be powered from a Li-Ion battery pack, e.g. as specified in Table 8.

The module only delivers, via its POWER line and CHARGE line, the control signals needed to start and stop the charging process. The charging circuit should include a transistor and should be designed as illustrated in Figure 7. A list of parts recommended for the external circuit is given in Table 7.

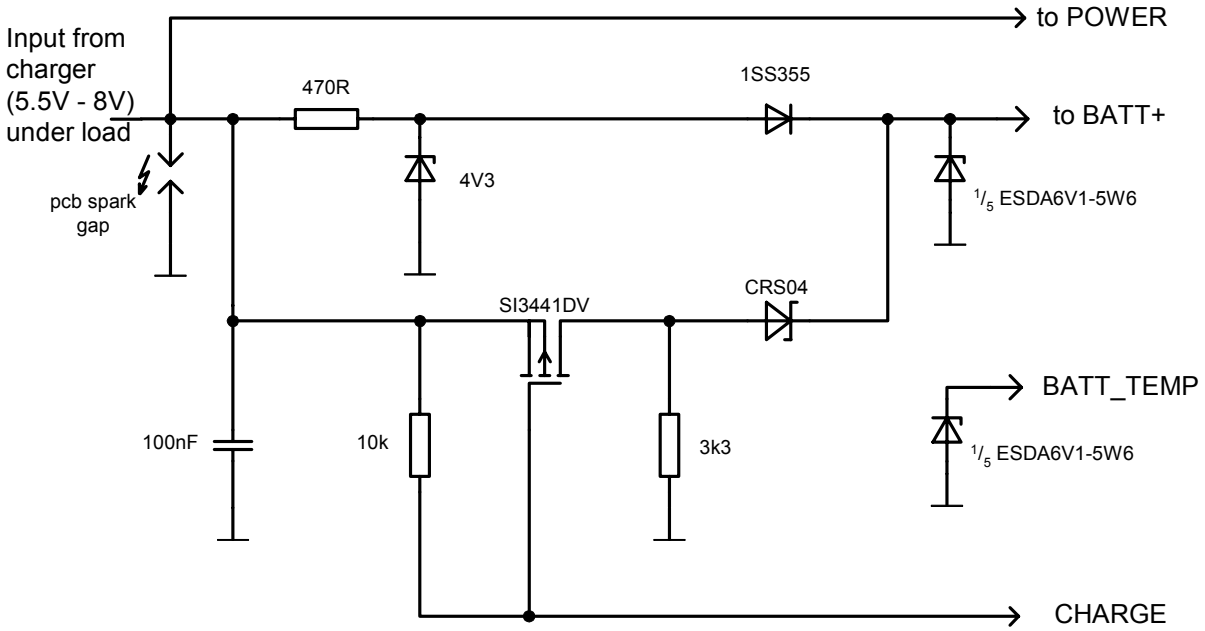

Figure 7: Schematic of approved charging transistor, trickle charging and ESD protection

Table 7: Bill of material for external charging circuit

Part	Description	First supplier	Second supplier
SI3441DV	p-chan 2.5V (G-S) MOSFET (TSOP-6)	VISHAY: SI3441DV-T1	NEC: UPA1911TE-T1
1SS355	100mA Si-diode (UMD2)	ROHM: 1SS355TE-18	Toshiba: 1SS352TPH3
CRS04	1A Schottky diode	Toshiba: CRS04	-
4V3	250mW; 200mA; 4.3V Z-Diode (SOD323)	Philips: PDZ4.3B	ROHM: UDZS4.3B UDZ4.3B
ESDA6V1-5W6	ESD protection TRANSIL™ array	STM: ESDA6V1-5W6	-
470R, 3k3, 10k	Resistor, e.g. 0805 or 0603	-	-
100nF	Ceramic capacitor 50V	-	-
PCB spark gap	0.2mm spark gap on PCB	-	-

3.5.1 Battery pack characteristics

The charging algorithm has been optimized for a Li-Ion battery pack that meets the characteristics listed below. It is recommended that the battery pack you want to integrate into your MC46 application is compliant with these specifications. This ensures reliable operation, proper charging and, particularly, allows you to monitor the battery capacity using the AT^SBC command (see [1] for details). Failure to comply with these specifications might cause AT^SBC to deliver incorrect battery capacity values. A battery pack especially designed to operate with MC46 modules is specified in Chapter 3.5.1.1.

- Li-Ion battery pack specified for a maximum charging voltage of 4.2 V and a capacity of 800 mAh. Battery packs with a capacity down to 600 mAh or more than 800 mAh are allowed, too.
- Since charging and discharging largely depend on the battery temperature, the battery pack should include an NTC resistor. If the NTC is not inside the battery it must be in thermal contact with the battery. The NTC resistor must be connected between BATT_TEMP and GND. Required NTC characteristics are: *10 kΩ ±5% @ 25°C, $B_{25/85}$ = 3435K ±3%* (alternatively acceptable: *10 kΩ ±2% @ 25°C, $B_{25/50}$ = 3370K ±3%)*. Please note that the NTC is indispensable for proper charging, i.e. the charging process will not start if no NTC is present.
- Ensure that the pack incorporates a protection circuit capable of detecting overvoltage (protection against overcharging), undervoltage (protection against deep discharging) and overcurrent. The circuit must be insensitive to pulsed current.
- On the MC46 module, a built-in measuring circuit constantly monitors the supply voltage. In the event of undervoltage, it causes MC46 to power down. Undervoltage thresholds are specific to the battery pack and must be evaluated for the intended model. When you evaluate undervoltage thresholds, consider both the current consumption of MC46 and of the application circuit.
- The internal resistance of the battery and the protection should be as low as possible. It is recommended not to exceed 150mΩ, even in extreme conditions at low temperature. The battery cell must be insensitive to rupture, fire and gassing under extreme conditions of temperature and charging (voltage, current).
- The battery pack must be protected from reverse pole connection. For example, the casing should be designed to prevent the user from mounting the battery in reverse orientation.
- The battery pack must be approved to satisfy the requirements of CE conformity.

Figure 8 shows the circuit diagram of a typical battery pack design that includes the protection elements described above.

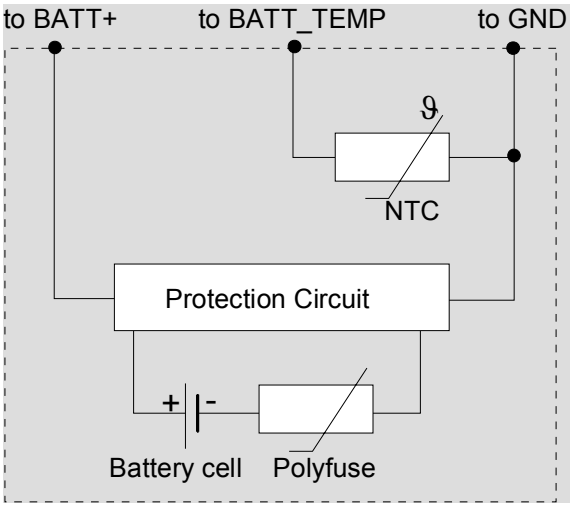

Figure 8: Battery pack circuit diagram

3.5.1.1 Recommended battery pack

The following battery pack has been especially designed for use with MC46 modules.

Table 8: Specifications of XWODA battery pack

Product name, type	XWODA, Li-Ion, 3.6V, 800mAh
Vendor To place orders or obtain more information please contact:	Shenzhen Xwoda Electronic Co., Ltd Building C, Tongfukang Industrial Zone Shiyan Town, Bao'an District Shenzen P.R. China Contact: Waichard Tsui Phone: +86-755-27623789 ext. 370 Fax: +86-755-27623078 Email: waichard@xwoda.com.cn
Nominal voltage	3.6V
Capacity	800mAh
NTC	10kΩ ± 5% @ 25°C, B (25/85)=3435K ± 3%
Overcharge detection voltage	4.325 ± 0.025V
Overcharge release voltage	4.075 ± 0.025V
Overdischarge detection voltage	2.5 ± 0.05V
Overdischarge release voltage	2.9 ± 0.5V
Overcurrent detection	3 ± 0.5A
Nominal working current	<5µA
Current of low voltage detection	0.5µA
Overcurrent detection delay time	8~16ms
Short detection delay time	50µs
Overdischarge detection delay time	31~125ms
Overcharge detection delay time	1s
Internal resistance	<130mΩ

3.5.2 Implemented charging technique

If the external charging circuit follows the recommendation of Figure 7, the charging process consists of trickle charging and processor controlled fast charging. For this solution, the fast charging current provided by the charger or any other external source must be limited to 500mA.

Trickle charging

- Trickle charging starts when the charger is connected to the charger input of the external charging circuit and the module's POWER pin. The charging current depends on the voltage difference between the charger input of the external charging circuit and BATT+ of the module.
- Trickle charging stops when the battery voltage reaches 3.6V.

Fast charging

- After trickle charging has raised the battery voltage to 3.2V within 60 minutes ±10% from connecting the charger, the power ASIC turns on and wakes up the baseband processor. Now, processor controlled fast charging begins.
  If the battery voltage was already above 3.2V, processor controlled fast charging starts just after the charger was connected to the charger input of the external charging circuit and the module's POWER pin. If MC46 was in POWER DOWN mode, it turns on and enters the Charge-only mode along with fast charging (see also Chapter 3.3.1.3).
- Fast charging delivers a constant current until the battery voltage reaches 4.2V and then proceeds with varying charge pulses. As shown in Figure 5, the pulse duty cycle is reduced to adjust the charging procedure and prevent the voltage from overshooting beyond 4.2V. Once the pulse width reaches the minimum of 100ms and the duty cycle does not change for 2 minutes, fast charging is completed.
- Fast charging can only be accomplished in a temperature range from 0°C to +45°C.

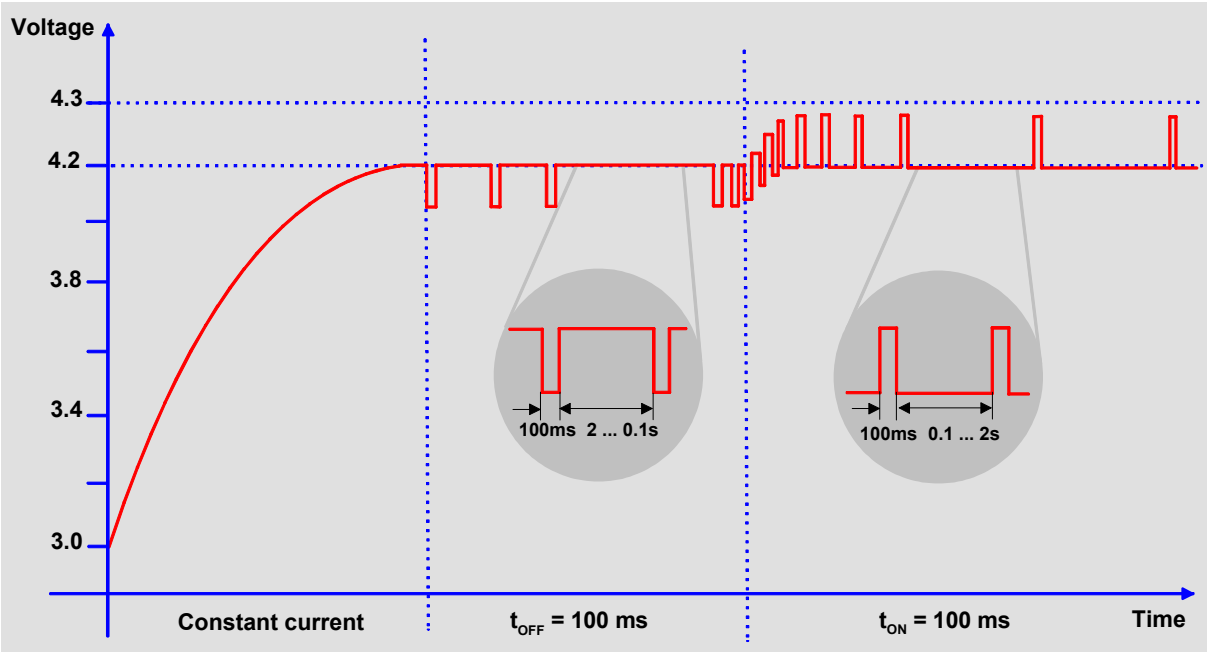

Figure 9: Charging process

Note: Do not connect the charger to the BATT+ lines. Only the charger input of the external charging circuit is intended as input for charging current! The POWER pin of MC46 is the input only for indicating a connected charger!
The battery manufacturer must guarantee that the battery complies with the described charging technique.

What to do if software controlled charging does not start up?
If trickle charging fails to raise the battery voltage to 3.2V within 60 minutes ±10%, processor controlled charging does not begin. To start fast charging you can do one of the following:

- Once the voltage has risen above its minimum of 3V, you can try to start software controlled charging by pulling the /IGT line to ground.
- If the voltage is still below 3V, driving the /IGT line to ground switches the timer off. Without the timer running, MC46 will not proceed to software controlled charging. To restart the timer you are required to shortly disconnect and reconnect the charger.

3.5.3 Operating modes during charging

Of course, the battery can be charged regardless of the engine's operating mode. When the GSM engine is in Normal mode (SLEEP, IDLE, TALK, GPRS IDLE or GPRS DATA mode), it remains operational while charging is in progress (provided that sufficient voltage is applied). The charging process during the Normal mode is referred to as *Charge mode*.

If the charger is connected to the charger input of the external charging circuit and the module's POWER pin while MC46 is in POWER DOWN mode, MC46 goes into *Charge-only* mode.

Table 9: Comparison Charge-only and Charge mode

	How to activate mode	Features
Charge mode	Connect charger to charger input of external charging circuit and module's POWER pin while MC46 is • operating, e.g. in IDLE or TALK mode • in SLEEP mode	• Battery can be charged while GSM engine remains operational and registered to the GSM network. • In IDLE and TALK mode, the serial interfaces are accessible. AT command set can be used to full extent. • In the NON-CYCLIC SLEEP mode, the serial interfaces are not accessible at all. During the CYCLIC SLEEP mode it can be used as described in Chapter 3.6.3.
Charge-only mode	Connect charger to charger input of external charging circuit and module's POWER pin while MC46 is • in POWER DOWN mode • in Normal mode: Connect charger to the POWER pin, then enter AT^SMSO. IMPORTANT: While trickle charging is in progress, be sure that the application is switched off. If the application is fed from the trickle charge current the module might be prevented from proceeding to software controlled charging since the current would not be sufficient.	• Battery can be charged while GSM engine is deregistered from GSM network. • Charging runs smoothly due to constant current consumption. • The AT interface is accessible and allows to use the commands listed below.

Features of Charge-only mode
Once the GSM engine enters the Charge-only mode, the AT command interface presents an Unsolicited Result Code (URC) which reads:

^SYSSTART CHARGE-ONLY MODE

Note that this URC will not appear when autobauding was activated (due to the missing synchronization between DTE and DCE upon start-up). Therefore, it is recommended to select a fixed baud rate before using the Charge-only mode.

While the Charge-only mode is in progress, you can only use the AT commands listed in Table 10. For further instructions refer to the AT Command Set supplied with your GSM engine.

Table 10: AT commands available in Charge-only mode

AT command	Use
AT+CALA	Set alarm time
AT+CCLK	Set date and time of RTC
AT^SBC	Monitor charging process Note: While charging is in progress, no battery capacity value is available. To query the battery capacity disconnect the charger. If the charger connects *externally* to the host device no charging parameters are transferred to the module. In this case, the command cannot be used.
AT^SCTM	Query temperature range, enable/disable URCs to report critical temperature ranges
AT^SMSO	Power down GSM engine

To proceed from Charge-only mode to normal operation, it is necessary to drive the ignition line to ground. This must be implemented in your host application as described in Chapter 3.3.1.1. See also Chapter 3.7 which summarizes the various options of changing the mode of operation.

If your host application uses the SYNC pin to control a status LED as described in Chapter 3.12.2.2, please note that the LED is off while the GSM engine is in Charge-only mode.

3.5.4 Charger requirements

If you are using the implemented charging technique and the charging circuit recommended in Figure 7, the charger must be designed to meet the following requirements:

a) Simple transformer power plug
- Output voltage: 5.5V...8V (under load)
- The charge current must be limited to 500mA
- Voltage spikes that may occur while you connect or disconnect the charger must be limited.
- There must not be any capacitor on the secondary side of the power plug (avoidance of current spikes at the beginning of charging)

b) Supplementary requirements for a) to ensure a regulated power supply
- When current is switched off a voltage peak of 10V is allowed for a maximum 1ms
- When current is switched on a spike of 1.6A for 1ms is allowed

3.6 Power saving

SLEEP mode reduces the functionality of the MC46 module to a minimum and, thus, minimizes the current consumption to the lowest level. SLEEP mode is set with the AT+CFUN command which provides the choice of the functionality levels <fun>=0, 1, 5, 6, 7 or 8, all explained below. Further instructions of how to use AT+CFUN can be found in [1].

IMPORTANT: The AT+CFUN command can be executed before or after entering PIN1. Nevertheless, please keep in mind *that power saving works properly only while the module is registered to the GSM network*. If you attempt to activate power saving while the module is detached, the selected <fun> level will be set, though power saving does not take effect. For the same reason, power saving cannot be used if MC46 operates in Alarm mode.

To check whether power saving is on, you can query the status of AT+CFUN if you have chosen CYCLIC SLEEP mode. If available, you can take advantage of the status LED controlled by the SYNC pin (see Chapter 3.12.2.2). The LED stops flashing once the module starts power saving.

The wake-up procedures are quite different depending on the selected SLEEP mode. Table 11 compares the wake-up events that can occur in NON-CYCLIC SLEEP mode and in the four CYCLIC SLEEP modes.

3.6.1 No power saving (AT+CFUN=1)

The functionality level <fun>=1 is where power saving is switched off. This is the default after startup.

3.6.2 NON-CYCLIC SLEEP mode (AT+CFUN=0)

If level 0 has been selected (AT+CFUN=0), the serial interface is blocked. The module shortly deactivates power saving to listen to a paging message sent from the base station and then immediately resumes power saving. Level 0 is called NON-CYCLIC SLEEP mode, since the serial interface is not alternatingly made accessible as in CYCLIC SLEEP mode.

The first wake-up event fully activates the module, enables the serial interface and terminates the power saving mode. In short, it takes MC46 back to the highest level of functionality <fun>=1.

To activate NON-CYCLIC SLEEP mode, enter the command AT+CFUN=0. Please note that after receiving AT+CFUN=0 the module waits 2 seconds before entering the power saving mode.

3.6.3 CYCLIC SLEEP mode (AT+CFUN=5, 6, 7 and 8)

The functionality levels AT+CFUN=5, AT+CFUN=6, AT+CFUN=7 and AT+CFUN=8 are referred to as CYCLIC SLEEP modes. The major benefit over the NON-CYCLIC SLEEP mode is that the serial interface is not permanently blocked and that packet switched calls may go on without terminating the selected CYCLIC SLEEP mode. This allows MC46 to become active, for example to perform a GPRS data transfer, and to resume power saving after the GPRS data transfer is completed.

The four CYCLIC SLEEP modes give you greater flexibility regarding the wake-up procedures: For example, in all CYCLIC SLEEP modes, you can enter AT+CFUN=1 to permanently wake up the module. The best choice is using CFUN=7 or 8, since in these modes MC46 automatically resumes power saving, after you have sent or received a short message or made a call. CFUN=5 and 6 do not offer this feature, and therefore, are only supported for compatibility with earlier releases. Please refer to Table 11 for a summary of all modes.

The CYCLIC SLEEP mode is a dynamic process which alternatingly enables and disables the serial interface. By setting/resetting the /CTS signal, the module indicates to the application whether or not the UART is active. The timing of the /CTS signal is described below.

Both the application and the module must be configured to use hardware flow control (RTS/CTS handshake). The default setting of MC46 is AT\Q0 (no flow control) which must be altered to AT\Q3. See [1] for details.

Note: If both serial interfaces ASC0 and ASC1 are connected, both are synchronized. This means that SLEEP mode takes effect on both, no matter on which interface the AT command was issued. Although not explicitly stated, all explanations given in this chapter refer equally to ASC0 and ASC1, and accordingly to /CTS0 and /CTS1.

3.6.4 Timing of the /CTS signal in CYCLIC SLEEP modes

The /CTS signal is enabled in synchrony with the module's paging cycle. It goes active low each time when the module starts listening to a paging message block from the base station. The timing of the paging cycle varies with the base station. The duration of a paging interval can be calculated from the following formula:

*4.616 ms (TDMA frame duration) * 51 (number of frames) * DRX value*.

DRX (Discontinuous Reception) is a value from 2 to 9, resulting in paging intervals from 0.47 to 2.12 seconds. The DRX value of the base station is assigned by the network operator.

Each listening period causes the /CTS signal to go active low: If DRX is 2, the /CTS signal is activated every 0.47 seconds, if DRX is 3, the /CTS signal is activated every 0.71 seconds and if DRX is 9, the /CTS signal is activated every 2.1 seconds.

The /CTS signal is active low for 4.6 ms. This is followed by another 4.6 ms UART activity. If the start bit of a received character is detected within these 9.2 ms, /CTS will be activated and the proper reception of the character will be guaranteed.

/CTS will also be activated if any character is to be sent from the module to the application.

After the last character was sent or received the interface will remain active for another

- 2 seconds, if AT+CFUN=5 or 7 or
- 10 minutes, if AT+CFUN=6 or 8.

In the pauses between listening to paging messages, while /CTS is high, the module resumes power saving and the AT interface is not accessible. See Figure 10 and Figure 11.

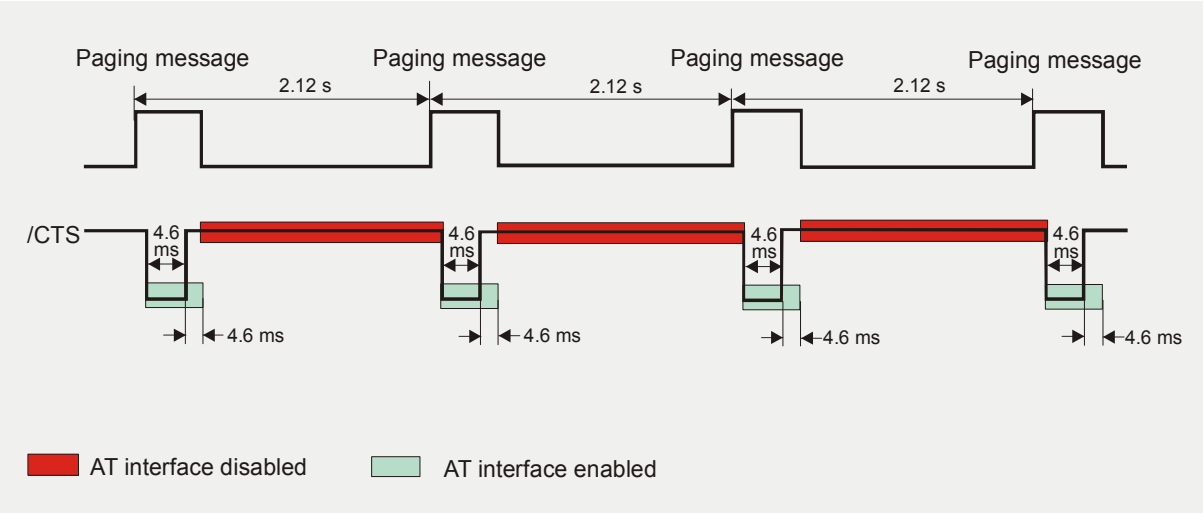

Figure 10: Timing of /CTS signal (example for a 2.12 s paging cycle)

Figure 11 illustrates the CFUN=5 and CFUN=7 modes, which reset the /CTS signal 2 seconds after the last character was sent or received.

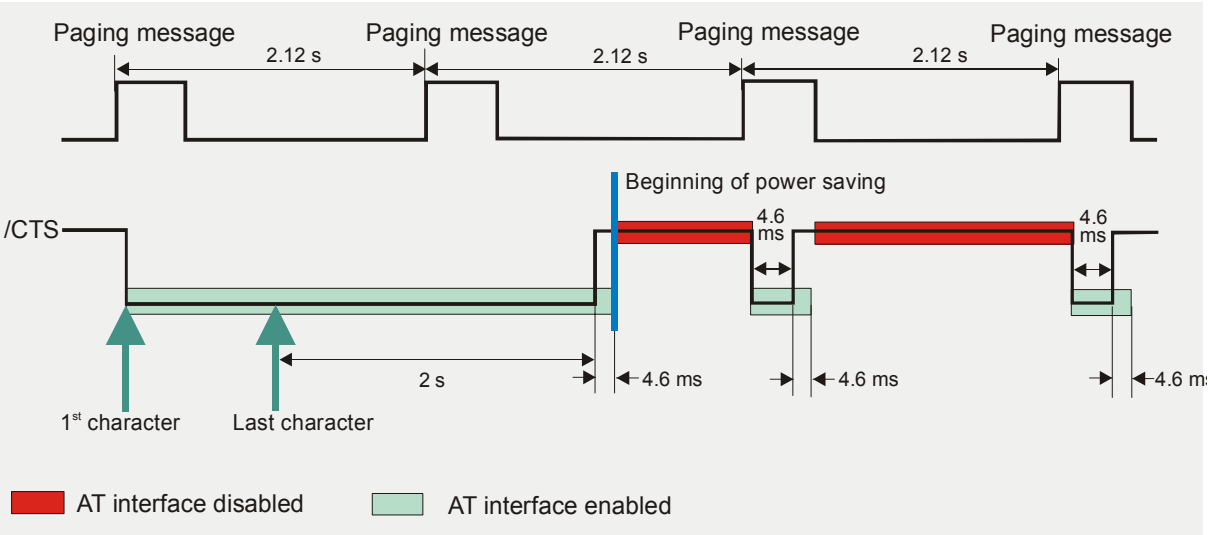

Figure 11: Beginning of power saving if CFUN=5 or 7

3.6.5 Wake up MC46 from SLEEP mode

A wake-up event is any event that switches off the SLEEP mode and causes MC46 to return to full functionality. In short, it takes MC46 back to AT+CFUN=1.

Definitions of the state transitions described in Table 11:
Yes = MC46 exits SLEEP mode.
No = MC46 does not exit SLEEP mode.

Table 11: Wake-up events in NON-CYCLIC and CYCLIC SLEEP modes

Event	From SLEEP mode AT+CFUN=0 to AT+CFUN=1	From SLEEP mode AT+CFUN=5 or 6 to AT+CFUN=1	From SLEEP mode AT+CFUN=7 or 8 to AT+CFUN=1
Ignition line	No	No	No
/RTS0 or /RTS1 (falling edge)	Yes[1)]	No[1)]	No[1)]
Unsolicited Result Code (URC)	Yes	Yes	No
Incoming voice or data call	Yes	Yes	No
Any AT command (incl. outgoing voice or data call, outgoing SMS)	Not possible (UART disabled)	No	No
Incoming SMS depending on mode selected by AT+CNMI:			
AT+CNMI=0,0 (= default, no indication of received SMS)	No	No	No
AT+CNMI=1,1 (= displays URC upon receipt of SMS)	Yes	Yes	No
GPRS data transfer	Not possible (UART disabled)	No	No
RTC alarm[2)]	Yes	Yes	No
AT+CFUN=1	Not possible (UART disabled)	Yes	Yes

1) During all CYCLIC SLEEP modes, /RTS0 and /RTS1 are conventionally used for flow control: The assertion of /RTS0 or /RTS1 signals that the application is ready to receive data - without waking up the module. Be aware that this behavior is different if CFUN=0: In this case, the assertion of /RTS0 and /RTS1 serves as a wake-up event, giving the application the possibility to intentionally terminate power saving.

2) Recommendation: In NON-CYCLIC SLEEP mode, you can set an RTC alarm to wake up MC46 and return to full functionality. This is a useful approach because, in this mode, the AT interface is not accessible.

3.7 Summary of state transitions (except SLEEP mode)

Table 12: State transitions of MC46 (except SLEEP mode)

The table shows how to proceed from one mode to another (gray column = present mode, white columns = intended modes)

Further mode ➔➔➔ / Present mode	POWER DOWN	Normal mode**)	Charge-only mode*)	Charging in normal mode*)**)	Alarm mode
POWER DOWN mode without charger	---	/IGT >100 ms at low level	Connect charger to input of ext. charging circuit and POWER pin (high level at POWER)	No direct transition, but via “Charge-only mode” or “Normal mode”	Wake-up from POWER DOWN mode (if activated with AT+CALA)
POWER DOWN mode with charger (high level at POWER pins of MC46)	---	/IGT >1 s at low level, if battery is fully charged	100ms < /IGT < 500ms at low level	/IGT >1 s at low level	Wake-up from POWER DOWN mode (if activated with AT+CALA)
Normal mode**)	AT^SMSO or exceptionally /EMERGOFF pin > 3.2s at low level	---	No automatic transition, but via “POWER DOWN”	Connect charger to POWER pin at MC46 (high level at POWER)	AT+CALA followed by AT^SMSO. MC46 enters Alarm mode when specified time is reached.
Charge-only mode *)	Disconnect charger (MC46 POWER pin at low level) or AT^SMSO or exceptionally /EMERGOFF pin ≥3.2s at low level	No automatic transition, but via “Charge in Normal mode”	---	/IGT >1s at low level	AT+CALA followed by AT^SMSO. MC46 enters Alarm mode when specified time is reached and V_{BATT+}≥3.2V
Charging in normal mode*) **)	AT^SMSO ➔ “Charge-only mode”, again AT^SMSO; or exceptionally /EMERGOFF pin ≥3.2s at low level	Disconnect charger from input of ext. charging circuit and module’s POWER pin	AT^SMSO	---	No direct transition
Alarm mode	AT^SMSO or exceptionally /EMERGOFF pin ≥3.2s at low level	/IGT >100ms at low level	No transition	/IGT >100ms at low level	---

*) See Chapter 3.5.3 for details on the charging mode

**) Normal mode covers TALK, DATA, GPRS, IDLE and SLEEP modes

3.8 RTC backup

The internal Real Time Clock of MC46 is supplied from a separate voltage regulator in the power supply ASIC which is also active when MC46 is in POWER DOWN status. An alarm function is provided that allows to wake up MC46 without logging on to the GSM network.

In addition, you can use the VDDLP pin on the board-to-board connector to backup the RTC from an external capacitor or a battery (rechargeable or non-chargeable). The capacitor is charged by the BATT+ line of MC46. If the voltage supply at BATT+ is disconnected the RTC can be powered by the capacitor. The size of the capacitor determines the duration of buffering when no voltage is applied to MC46, i.e. the greater capacitor the longer MC46 will save the date and time.

The following figures show various sample configurations. The voltage applied at VDDLP can be in the range from 2 to 5.5V. Please refer to Table 27 for the parameters required.

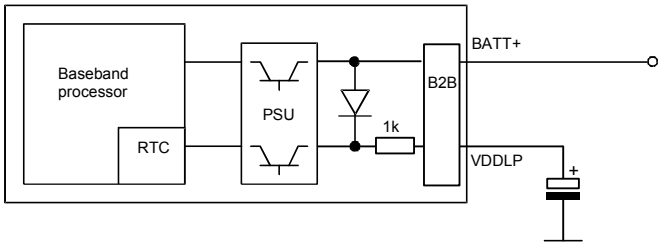

Figure 12: RTC supply from capacitor

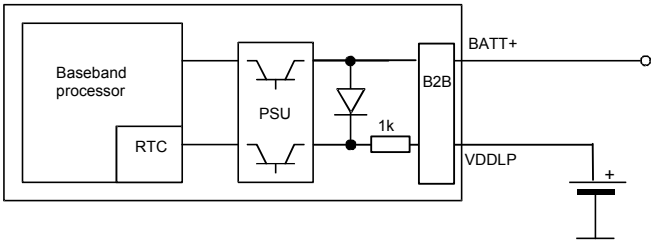

Figure 13: RTC supply from rechargeable battery

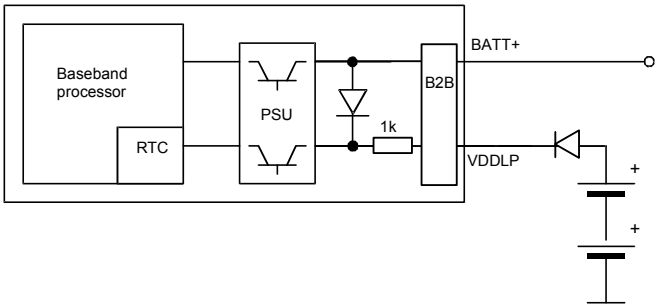

Figure 14: RTC supply from non-chargeable battery

3.9 Serial interfaces

MC46 offers two unbalanced, asynchronous serial interfaces conforming to ITU-T V.24 protocol DCE signaling. The electrical characteristics do not comply with ITU-T V.28. The significant levels are 0V (for low data bit or ON condition) and 2.65V (for high data bit or OFF condition). For electrical characteristics please refer to Table 38.

The GSM engine is designed for use as a DCE. Based on the conventions for DCE-DTE connections it communicates with the customer application (DTE) using the following signals:

ASC0
- Port /TXD @ application sends data to the module's /TXD0 signal line
- Port /RXD @ application receives data from the module's /RXD0 signal line

ASC1
- Port /TXD @ application sends data to module's /TXD1 signal line
- Port /RXD @ application receives data from the module's /RXD1 signal line

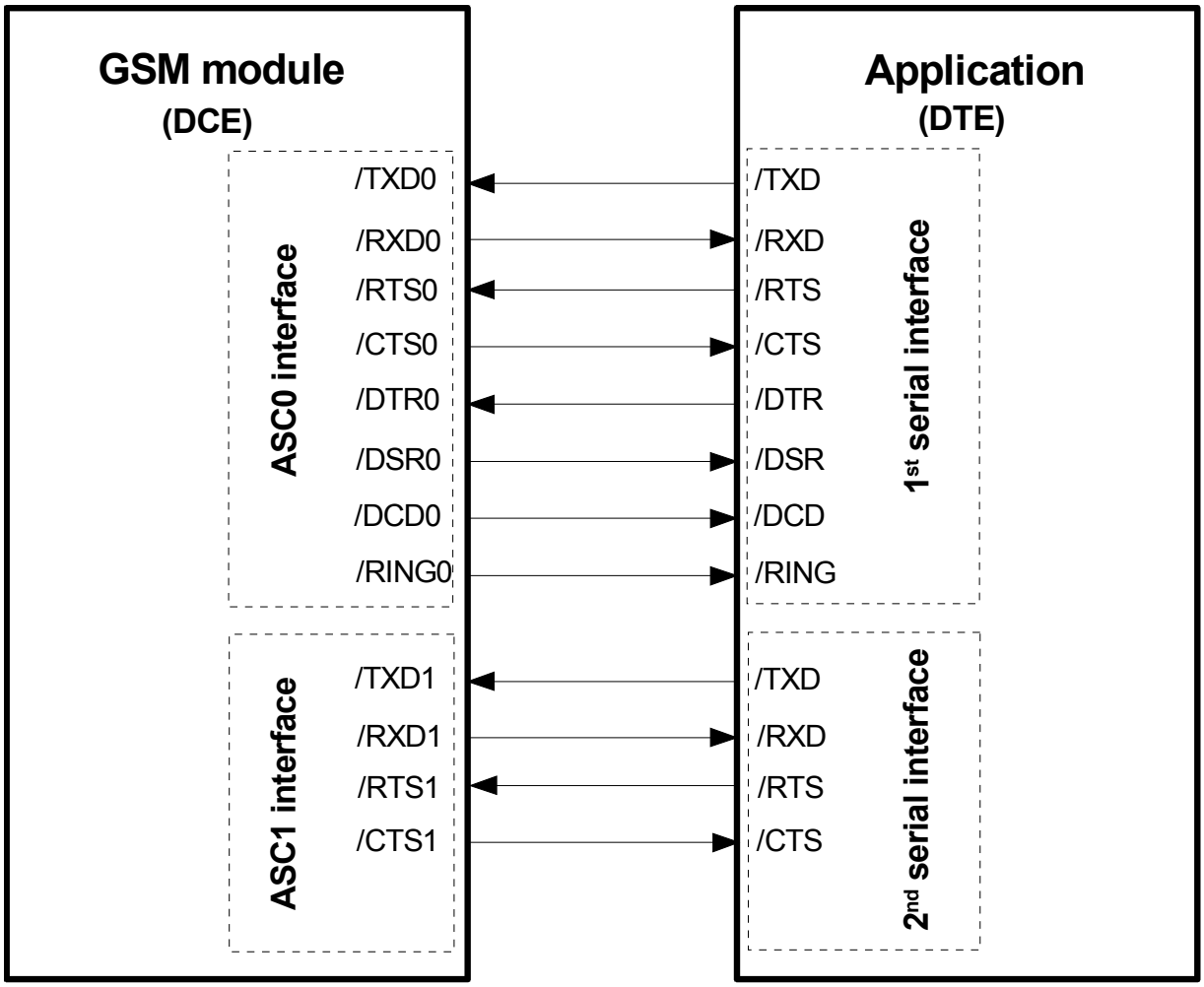

Figure 15: Serial interfaces

3.9.1 Features supported on first and second serial interface

ASC0

- 8-wire serial interface
- Includes the data lines /TXD0 and /RXD0, the status lines /RTS0 and /CTS0 and, in addition, the modem control lines /DTR0, /DSR0, /DCD0 and /RING0.
- It is primarily designed for voice calls, CSD calls, fax calls and GPRS services and for controlling the GSM engine with AT commands. Full Multiplex capability allows the interface to be partitioned into three virtual channels, yet with CSD and fax services only available on the first logical channel. Please note that when the ASC0 interface runs in Multiplex mode, ASC1 cannot be used. For more detailed characteristics see [10].
- The /DTR0 signal will only be polled once per second from the internal firmware of MC46.
- The /RING0 signal serves to indicate incoming calls and other types of URCs (Unsolicited Result Code). It can also be used to send pulses to the host application, for example to wake up the application from power saving state. For further details see Chapter 3.12.2.3.
- Autobauding is only selectable on ASC0 and supports the following bit rates: 1200, 2400, 4800, 9600, 19200, 38400, 57600, 115200, 230400 bps.
- Autobauding is not compatible with multiplex mode, see [10].

ASC1

- 4-wire serial interface
- Includes only the data lines /TXD1 and /RXD1 plus /RTS1 and /CTS1 for hardware handshake. This interface is intended for voice calls, GPRS services and for controlling the GSM engine with AT commands. It is not suited for CSD calls, fax calls and Multiplex mode.
- On ASC1 no RING line is available. The indication of URCs on the second interface depends on the settings made with the AT^SCFG command. For details refer to [1].

ASC0 and ASC1

- Both interfaces are configured for 8 data bits, no parity and 1 stop bit, and can be operated at bit rates from 300bps to 230400 bps.
- XON/XOFF software flow control can be used on both interfaces (except if power saving is active).

Table 13: DCE-DTE wiring of 1st serial interface

V.24 circuit	DCE		DTE	
	Pin function	Signal direction	Pin function	Signal direction
103	/TXD0	Input	/TXD	Output
104	/RXD0	Output	/RXD	Input
105	/RTS0	Input	/RTS	Output
106	/CTS0	Output	/CTS	Input
108/2	/DTR0	Input	/DTR	Output
107	/DSR0	Output	/DSR	Input
109	/DCD0	Output	/DCD	Input
125	/RING0	Output	/RING	Input

Table 14: DCE-DTE wiring of 2nd serial interface

V.24 circuit	DCE		DTE	
	Pin function	**Signal direction**	**Pin function**	**Signal direction**
103	/TXD1	Input	/TXD	Output
104	/RXD1	Output	/RXD	Input
105	/RTS1	Input	/RTS	Output
106	/CTS1	Output	/CTS	Input

3.10 Audio interfaces

MC46 comprises three audio interfaces available on the board-to-board connector:

- Two analog audio interfaces, each with a balanced analog microphone input and a balanced analog earpiece output. The second analog interface provides a supply circuit to feed an active microphone.
- Serial digital audio interface (DAI) using PCM (Pulse Code Modulation) to encode analog voice signals into digital bit streams.

This means you can connect up to three audio devices in any combination, all at the same time. Using the AT^SAIC command you can easily switch back and forth.

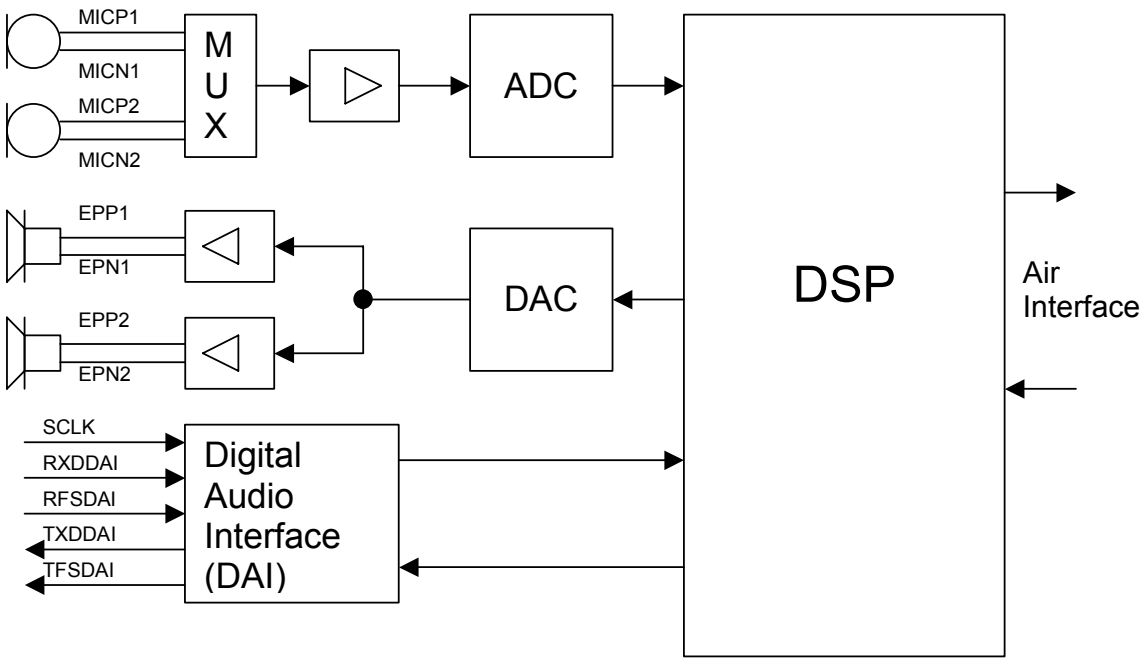

Figure 16: Audio block diagram

MC46 offers six audio modes which can be selected with the AT^SNFS command, no matter which of the three interfaces is currently active. The electrical characteristics of the voiceband part vary with the audio mode. For example, sending and receiving amplification, sidetone paths, noise suppression etc. depend on the selected mode and can be altered with AT commands (except for mode 1).

On each audio interface you can use all audio AT commands specified in [1] to alter parameters. The only exception are the DAC and ADC gain amplifier attenuation <outBbcGain> and <inBbcGain> which cannot be modified when the digital audio interface is used, since in this case the DAC and ADC are switched off.

Please refer to Chapter 5.5 for specifications of the audio interface and an overview of the audio parameters. Detailed instructions on using AT commands are presented in the "MC46 AT Command Set" [1]. Table 30 on page 80 summarizes the characteristics of the various audio modes and shows what parameters are supported in each mode.

When shipped from factory, all audio parameters of MC46 are set to interface 1 and audio mode 1. This is the default configuration optimized for the Votronic HH-SI-30.3/V1.1/0 handset and used for type approving the Siemens reference configuration. Audio mode 1 has fix parameters which cannot be modified. To adjust the settings of the Votronic handset simply change to another audio mode.

In transmit direction, all audio modes contain internal scaling factors (digital amplification) that are not accessible by the user. To avoid saturation with a full scale digital input signal on the DAI, and to obtain a one-to-one digital access to the speech coder in audio mode 5 and 6, it is recommended to set the parameter <inCalibrate> of the selected audio mode as follows:

Audio mode 1 and 4:	23196
Audio mode 2:	17396
Audio mode 3:	21901
Audio mode 5 and 6:	21402

3.10.1 Microphone circuit

Interface 1
This interface has no microphone supply circuit and therefore, has an impedance of 50kΩ. When connecting a microphone or another signal source to interface 1 you are required to add two 100 nF capacitors, one to each line.

Interface 2
This interface comes with a microphone supply circuit and can be used to feed an active microphone. It has an impedance of 2kΩ. If you do not use it or if you want to connect another type of signal source, for example, an op amp or a dynamic microphone, it needs to be decoupled with capacitors. The power supply can be switched off and on by using the command AT^SNFM. For details see [1].

Figure 17 shows the microphone inputs at both analog interfaces of MC46.

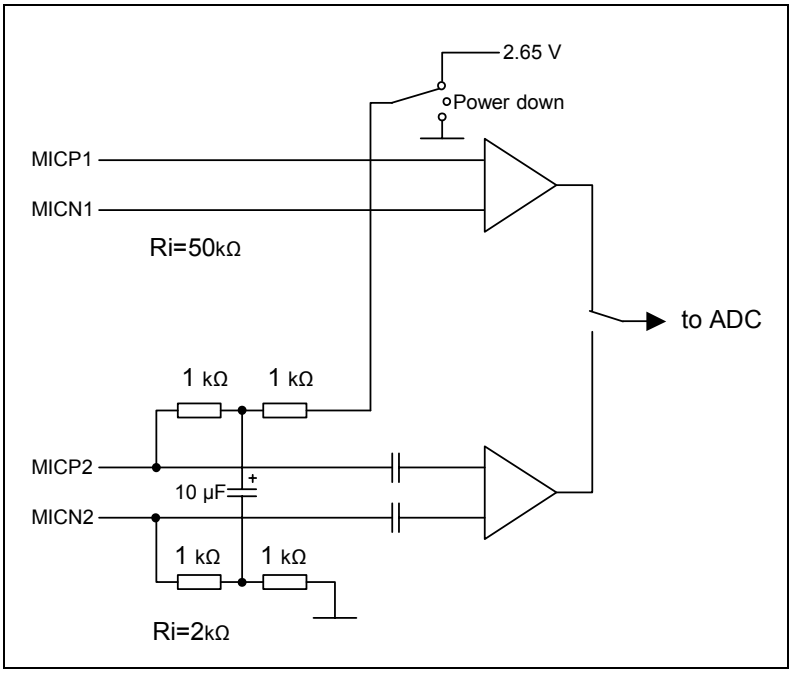

Figure 17: Schematic of microphone inputs

3.10.2 Speech processing

The speech samples from the ADC or DAI are handled by the DSP of the baseband controller to calculate e.g. amplifications, sidetone, echo cancellation or noise suppression depending on the configuration of the active audio mode. These processed samples are passed to the speech encoder. Received samples from the speech decoder are passed to the DAC or DAI after post processing (frequency response correction, adding sidetone etc.).

Full rate, half rate, enhanced full rate, adaptive multi rate (AMR), speech and channel encoding including voice activity detection (VAD) and discontinuous transmission (DTX) and digital GMSK modulation are also performed on the GSM baseband processor.

Customer specific audio parameters can be evaluated and supplied by Siemens on request. These parameters can be downloaded to MC46 using an AT command. For further information refer to [8] or contact your Siemens distributor.

3.10.3 DAI timing

To support the DAI function, MC46 integrates a simple five-line serial interface with one input data clock line (SCLK) and input / output data and frame lines (TXDDAI, TFSDAI, RXDDAI, RFSDAI).

The serial interface is always active if the external input data clock SLCK is present, i.e. the serial interface is not clocked by the DSP of the MC46 baseband processor. SLCK must be supplied from the application and can be in a frequency range between 0.2 and 10 MHz. Serial transfer of 16-bit words is done in both directions.

Data transfer to the application is initiated by the module through a short pulse of TFSDAI. The duration of the TFSDAI pulse is one SCLK period, starting at the rising edge of SLCK. During the following 16 SLCK cycles, the 16-bit sample will be transferred on the TXDDAI line. The next outgoing sample will be transferred after the next TFSDAI pulse which occurs every 125 µs.

The TFSDAI pulse is the master clock of the sample transfer. From the rising edge of the TFSDAI pulse, the application has 100 µs to transfer the 16-bit input sample on the RXDDAI line. The rising edge of the RFSDAI pulse (supplied by the application) may coincide with the falling edge of TFSDAI or occur slightly later - it is only significant that, in any case, the transfer of the LSB input sample will be completed within the specified duration of 100 µs.

Audio samples are transferred from the module to the application in an average of 125µs. This is determined by the 8kHz sampling rate, which is derived from and synchronized to the GSM network. As SLCK is independent of the GSM network, the distance between two succeeding sample transfers may vary about ± 1 SLCK period.

The application is required to adapt its sampling rate to the TFSDAI rate. Failure to synchronize the timing between the module and the application may cause audible pops and clicks in a conversation. The timing characteristics of both data transfer directions are shown in Figure 18 and Figure 19.

Note: Before starting the data transfer the clock SCLK should be available for at least three cycles.
After the transfer of the LSB0 the clock SCLK should be still available for at least three cycles.

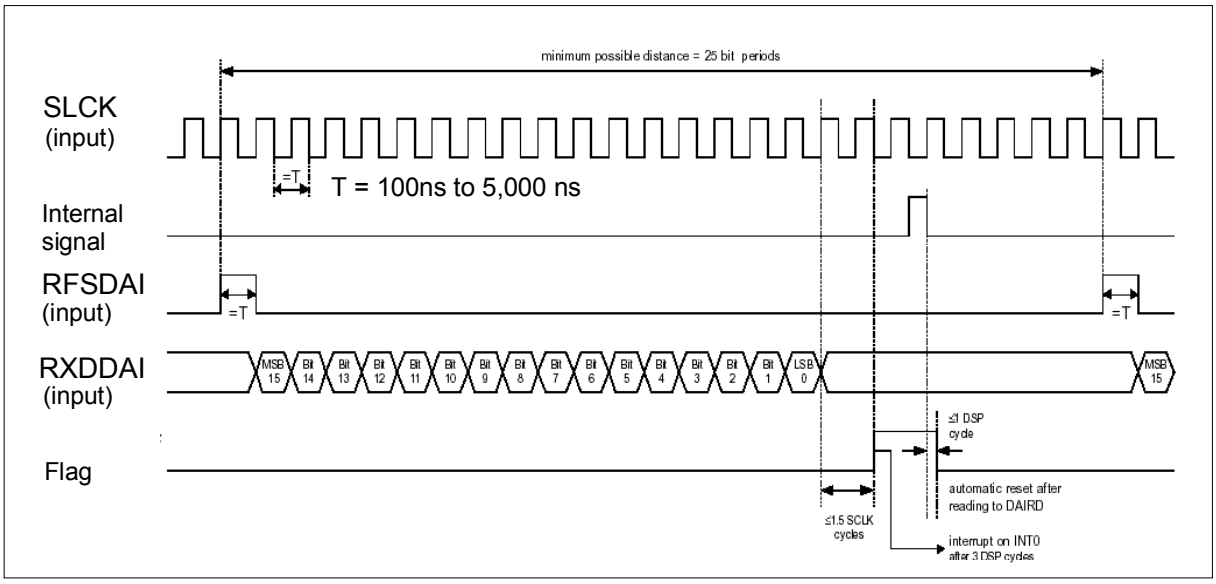

Figure 18: DAI timing on transmit path

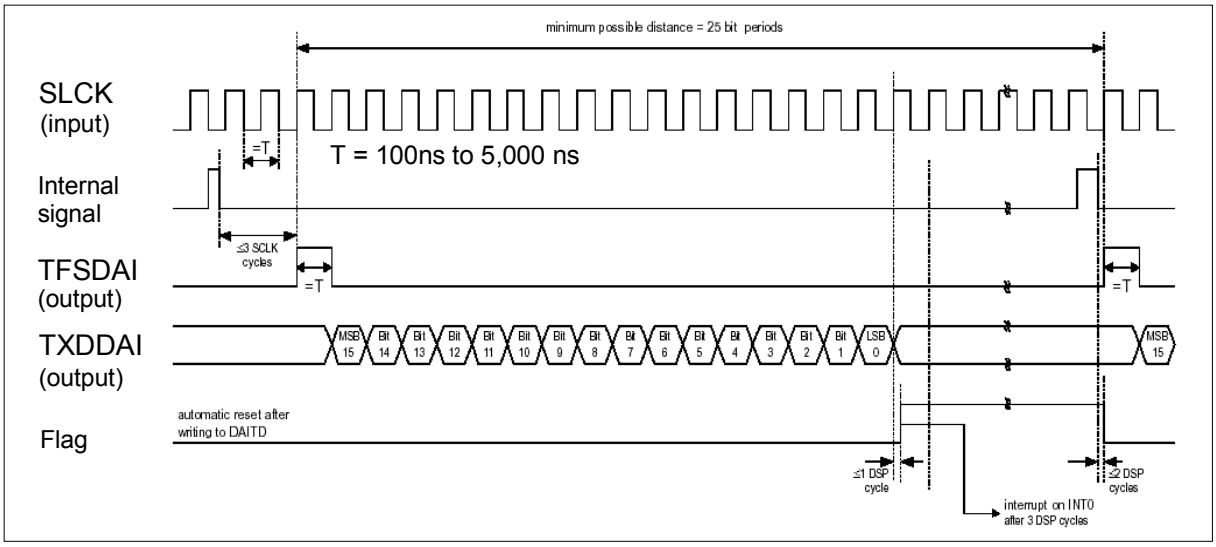

Figure 19: DAI timing on receive path

3.11 SIM interface

The baseband processor has an integrated SIM interface compatible with the ISO 7816 IC Card standard. This is wired to the host interface (board-to-board connector) in order to be connected to an external SIM card holder. Six pins on the board-to-board connector are reserved for the SIM interface.

The CCIN pin serves to detect whether a tray (with SIM card) is present in the card holder. Using the CCIN pin is mandatory for compliance with the GSM 11.11 recommendation if the mechanical design of the host application allows the user to remove the SIM card during operation. See Chapter 3.11.1 for details.

It is recommended that the total cable length between the board-to-board connector pins on MC46 and the pins of the SIM card holder does not exceed 200 mm in order to meet the specifications of 3GPP TS 51.010-1 and to satisfy the requirements of EMC compliance.

Table 15: Signals of the SIM interface (board-to-board connector)

Signal	Description
CCGND	Separate ground connection for SIM card to improve EMC.
CCCLK	Chipcard clock, various clock rates can be set in the baseband processor.
CCVCC	SIM supply voltage from PSU-ASIC
CCIO	Serial data line, input and output.
CCRST	Chipcard reset, provided by baseband processor.
CCIN	Input on the baseband processor for detecting a SIM card tray in the holder. The CCIN pin is mandatory for applications that allow the user to remove the SIM card during operation. The CCIN pin is solely intended for use with a SIM card. It must not be used for any other purposes. Failure to comply with this requirement may invalidate the type approval of MC46.

3.11.1 Requirements for using the CCIN pin

According to ISO/IEC 7816-3 the SIM interface must be immediately shut down once the SIM card is removed during operation. Therefore, the signal at the CCIN pin must go low *before* the SIM card contacts are mechanically detached from the SIM interface contacts. This shut-down procedure is particularly required to protect the SIM card as well as the SIM interface of MC46 from damage.

An appropriate SIM card detect switch is required on the card holder. For example, this is true for the model supplied by Molex, which has been tested to operate with MC46 and is part of the Siemens reference equipment submitted for type approval. Molex ordering number is 91228-0001, see also Chapter 8.

The module's startup procedure involves a SIM card initialization performed within 1 second after getting started. An important issue is whether the initialization procedure ends up with a high or low level of the CCIN signal:

a) If, during startup of MC46, the CCIN signal on the SIM interface is high, then the status of the SIM card holder can be recognized each time the card is inserted or ejected.
   A low level of CCIN indicates that no SIM card tray is inserted into the holder. In this case, the module keeps searching, at regular intervals, for the SIM card. Once the SIM card tray with a SIM card is inserted, CCIN is taken high again.
b) If, during startup of MC46, the CCIN signal is low, the module will also attempt to initialize the SIM card. In this case, the initialization will only be successful when the card is present.
   If the SIM card initialization has been done, but the card is no more operational or removed, then the module will never search again for a SIM card and only emergency calls can be made.

Removing and inserting the SIM card during operation requires the software to be reinitialized. Therefore, after reinserting the SIM card it is necessary to restart MC46.
It is strongly recommended to connect the contacts of the SIM card detect switch to the CCIN input and to the CCVCC output of the module as illustrated in the sample diagram in Figure 20.

Note: No guarantee can be given, nor any liability accepted, if loss of data is encountered after removing the SIM card during operation.
Also, no guarantee can be given for properly initializing any SIM card that the user inserts after having removed a SIM card during operation. In this case, the application must restart MC46.

3.11.2 Design considerations for SIM card holder

The schematic below is a sample configuration that illustrates the Molex SIM card holder located on the DSB45 Support Box (evaluation kit used for type approval of the Siemens MC46 reference setup, see [5]). X503 is the designation used for the SIM card holder in [5].

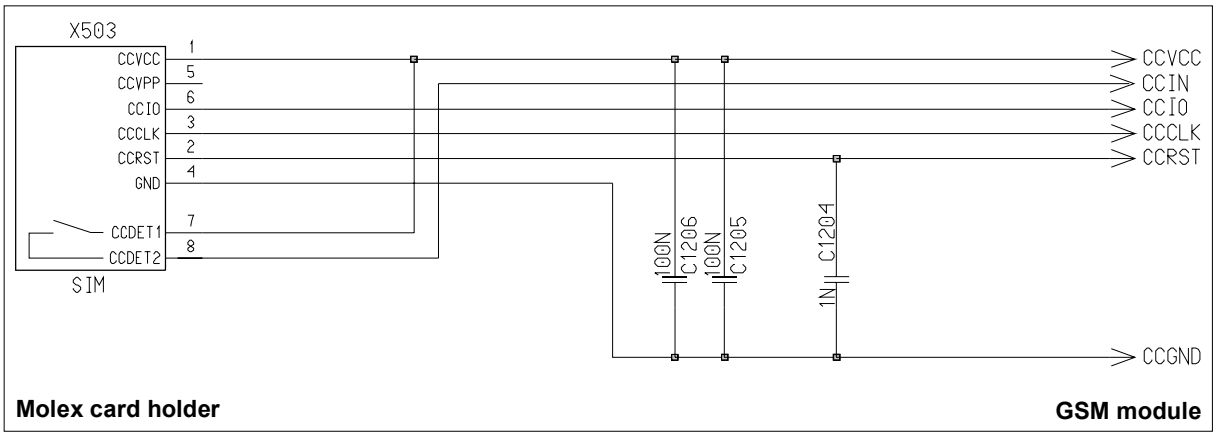

Figure 20: SIM card holder of DSB45 Support Box

Table 16 : Pin assignment of Molex SIM card holder on DSB45 Support Box

Pin no.	Signal name	I/O	Function
1	CCVCC	I	Supply voltage for SIM card, generated by the GSM engine
2	CCRST	I	Chip card reset, prompted by the GSM engine
3	CCCLK	I	Chip card clock
4	CCGND	-	Individual ground line for the SIM card to improve EMC
5	CCVPP	-	Not connected
6	CCIO	I/O	Serial data line, bi-directional
7	CCDET1	-	Connect to CCVCC
8	CCDET2		Connects to the CCIN input of the GSM engine. Serves to recognize whether a SIM card is in the holder.

Pins 1 through 8 (except for 5) are the minimum requirement according to the GSM Recommendations, where pins 7 and 8 are needed for SIM card tray detection through the CCIN pin.

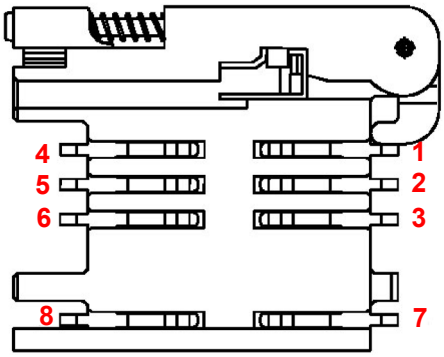

Figure 21: Pin numbers of Molex SIM card holder on DSB45 Support Box

Place the capacitors C1205 and C1206 (or instead one capacitor of 200nF) as close as possible to the pins 1 (CCVCC) and 4 (GND) of the card holder. Connect the capacitors to the pins via low resistance tracks.

3.12 Control signals

3.12.1 Inputs

Table 17: Input control signals of the MC46 module

Signal	Pin	Pin status	Function	Remarks
Ignition	/IGT	Falling edge	Power up MC46	Active low ≥ 100ms (Open drain/collector driver to GND required in cellular device application). Note: If a charger and a battery is connected to the customer application the /IGT signal must be 1s minimum.
		Left open or HiZ	No operation	
Emergency shutdown	/EMERG-OFF	Low	Power down MC46	Active low ≥ 3.2s (Open drain/collector driver required in cellular device application). At the /EMERGOFF signal the watchdog signal of the GSM engine can be traced (see description in Table 27).
		Left open or HiZ	No operation	

(HiZ = high impedance)

3.12.2 Outputs

3.12.2.1 Synchronization signal

The synchronization signal serves to indicate growing power consumption during the transmit burst. The signal is generated by the SYNC pin (pin number 32). Please note that this pin can adopt two different operating modes which you can select by using the AT^SSYNC command (mode 0 and 1). For details refer to the following chapter and to [1].

To generate the synchronization signal the pin needs to be configured to mode 0 (= default). This setting is recommended if you want your application to use the synchronization signal for better power supply control. Your platform design must be such that the incoming signal accommodates sufficient power supply to the MC46 module if required. This can be achieved by lowering the current drawn from other components installed in your application. The characteristics of the synchronization signal are explained below.

Table 18: MC46 synchronization signal (if SYNC pin is set to mode 0 via AT^SSYNC)

Function	Pin	Pin status	Description
Synchronization	SYNC	Low	No operation
		High	Indicates increased power consumption during transmission.

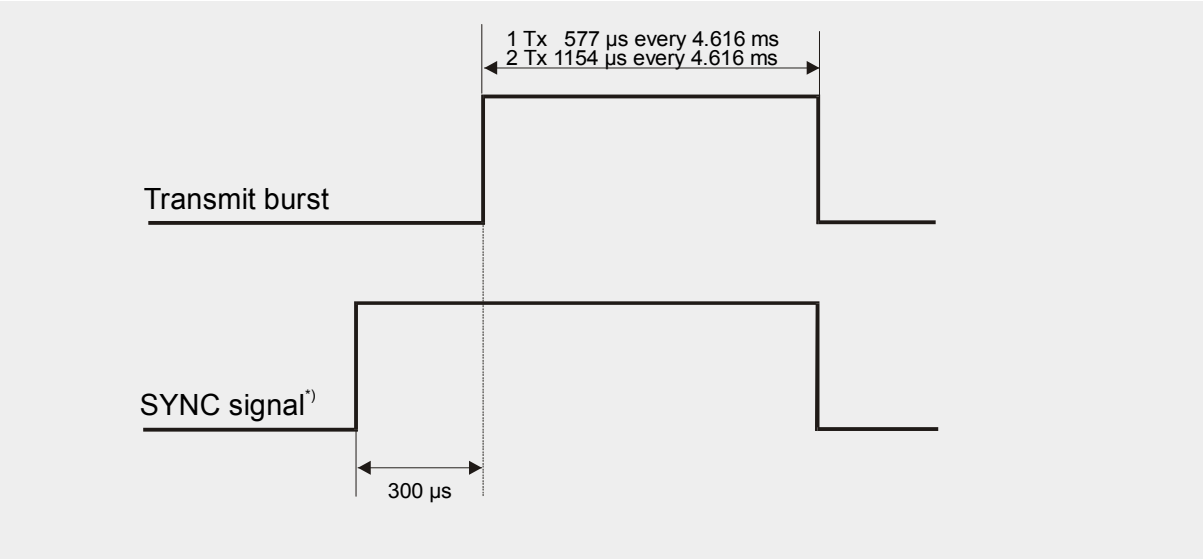

Figure 22: SYNC signal during transmit burst

*) The duration of the SYNC signal is always equal, no matter whether the traffic or the access burst are active.

3.12.2.2 Using the SYNC pin to control a status LED

As an alternative to generating the synchronization signal, the SYNC pin can be used to control a status LED on your application platform.

To avail of this feature you need to set the SYNC pin to mode 1 by using the AT^SSYNC command. For details see [1].

When controlled from the SYNC pin the LED can display the functions listed in Table 19. Especially in the development and test phase of an application, system integrators are advised to use the LED mode of the SYNC pin in order to evaluate their product design and identify the source of errors.

Table 19: Coding of the status LED

LED mode	Operating status
Off	MC46 is off or run in SLEEP, Alarm or Charge-only mode
600 ms On / 600ms Off	No SIM card inserted or no PIN entered, or network search in progress, or ongoing user authentication, or network login in progress.
75 ms On / 3 s Off	Logged to network (monitoring control channels and user interactions). No call in progress.
75 ms on / 75 ms Off / 75 ms On / 3 s Off	One or more GPRS contexts activated.
Flashing	Indicates GPRS data transfer: When a GPRS transfer is in progress, the LED goes on within 1 second after data packets were exchanged. Flash duration is approximately 0.5 s.
On	Depending on type of call: *Voice call:* Connected to remote party. *Data call:* Connected to remote party or exchange of parameters while setting up or disconnecting a call.

LED Off = SYNC pin low. LED On = SYNC pin high (if LED is connected as illustrated in Figure 23)

To operate the LED a buffer, e.g. a transistor or gate, must be included in your application. A sample configuration can be gathered from Figure 23. Power consumption in the LED mode is the same as for the synchronization signal mode. For details see Table 27, SYNC pin.

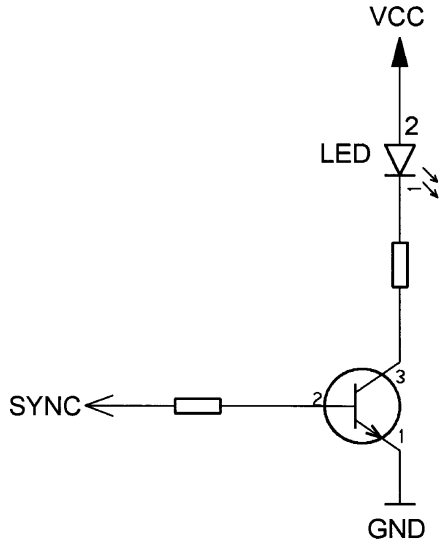

Figure 23: LED Circuit (Example)

3.12.2.3 Behavior of the /RING0 line (ASC0 interface only)

The /RING0 line is available on the first serial interface ASC0 (see also Chapter 3.9). The signal serves to indicate incoming calls and other types of URCs (Unsolicited Result Code).

Although not mandatory for use in a host application, it is strongly suggested that you connect the /RING0 line to an interrupt line of your application. In this case, the application can be designed to receive an interrupt when a falling edge on /RING0 occurs. This solution is most effective, particularly, for waking up an application from power saving. Note that if the /RING0 line is not wired, the application would be required to permanently poll the data and status lines of the serial interface at the expense of a higher current consumption. Therefore, utilizing the /RING0 line provides an option to significantly reduce the overall current consumption of your application.

The behavior of the /RING0 line varies with the type of event:

- When a *voice call* comes in the /RING0 line goes low for 1s and high for another 4s. Every 5 seconds the ring string is generated and sent over the /RXD0 line.
  If there is a call in progress and call waiting is activated for a connected handset or handsfree device, the /RING0 line switches to ground in order to generate acoustic signals that indicate the waiting call.

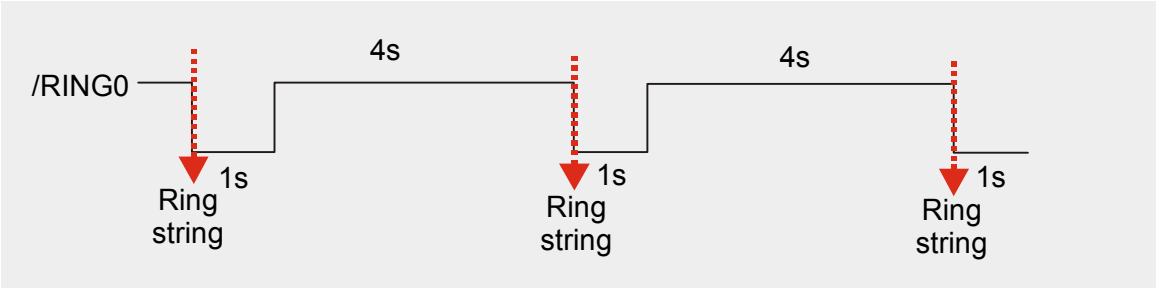

Figure 24: Incoming voice call

- Likewise, when a *Fax* or *data call* is received, /RING0 goes low. However, in contrast to voice calls, the line remains low. Every 5 seconds the ring string is generated and sent over the /RXD0 line.

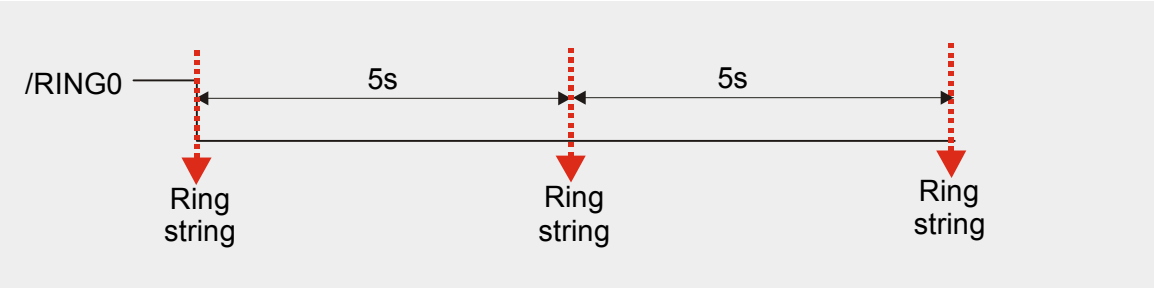

Figure 25: Incoming data call

- All types of Unsolicited Result Codes (URCs) also cause the /RING0 line to go low, however for 1 second only.
  For example, MC46 may be configured to output a URC upon the receipt of an SMS. As a result, if this URC type was activated with AT+CNMI=1,1, each incoming SMS causes the /RING0 line to go low. See [1] for detailed information on URCs.

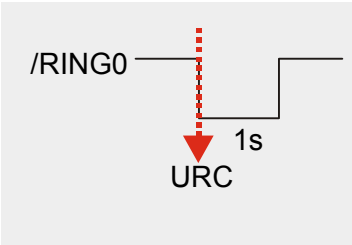

Figure 26: URC transmission

Table 20: MC46 ring signal

Function	Pin	Status	Description
Ring indication	/RING0	0	Indicates an incoming call or URC. If in NON-CYCLIC SLEEP mode CFUN=0 or CYCLIC SLEEP mode CFUN=5 or 6, the module is caused to wake up to full functionality. If CFUN=7 or 8, power saving is resumed after URC transmission or end of call.
		1	No operation

4 Antenna interface

The RF interface has an impedance of 50Ω. MC46 is capable of sustaining a total mismatch at the antenna connector or pad without any damage, even when transmitting at maximum RF power.

The external antenna must be matched properly to achieve best performance regarding radiated power, DC-power consumption and harmonic suppression. Matching networks are not included on the MC46 PCB and should be placed in the host application.

Regarding the return loss MC46 provides the following values:

Table 21: Return loss

State of module	Return loss of module	Recommended return loss of application
Receive	≥ 8dB	≥ 12dB
Transmit	not applicable	≥ 12dB
Idle	≤ 5dB	not applicable

The connection of the antenna or other equipment must be decoupled from DC voltage.

4.1 Antenna installation

To suit the physical design of individual applications MC46 offers two alternative approaches to connecting the antenna:

- Recommended approach: U.FL-R-SMT antenna connector from Hirose assembled on the component side of the PCB (top view on MC46). See Chapter 4.1.2 for details.
- Antenna pad and grounding plane placed on the bottom side. See Chapter 4.1.1.

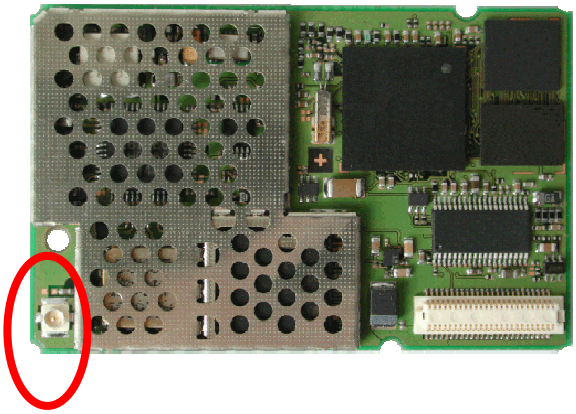

Figure 27: U.FL-R-SMT connector

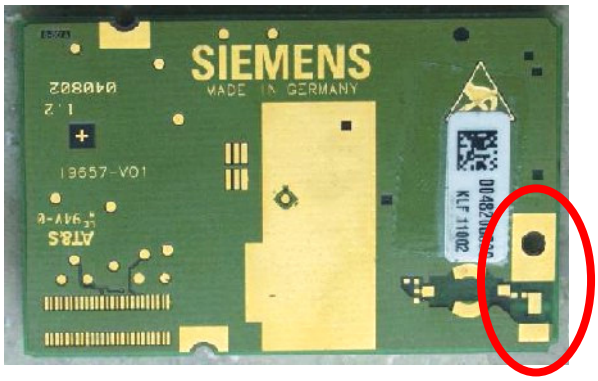

Figure 28: Antenna pad and GND pad

The U.FL-R-SMT connector has been chosen as antenna reference point (ARP) for the Siemens reference equipment submitted to type approve MC46. All RF data specified throughout this manual are related to the ARP. For compliance with the test results of the Siemens type approval you are advised to give priority to the connector, rather than using the antenna pad.

IMPORTANT: Both solutions can only be applied alternatively. This means, whenever an antenna is plugged to the Hirose connector, the pad must not be used. Vice versa, if the antenna is connected to the pad, then the Hirose connector must be left empty.

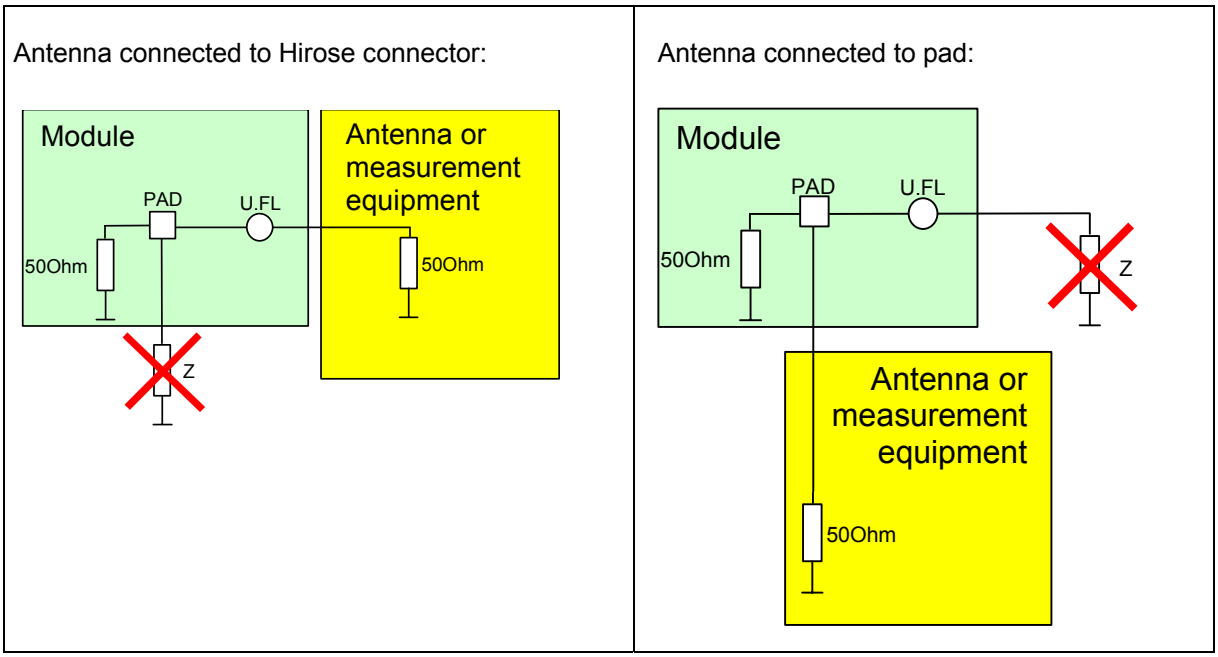

Figure 29: Never use antenna connector and antenna pad at the same time

No matter which option you choose, ensure that the antenna pad does not come into contact with the holding device or any other components of the host application. It needs to be surrounded by a restricted area filled with air, which must also be reserved 0.8 mm in height.

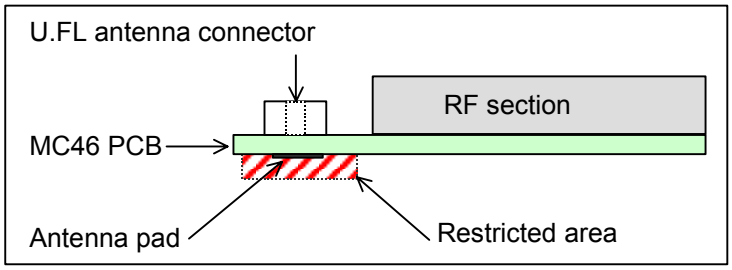

Figure 30: Restricted area around antenna pad

4.1.1 Antenna pad

The antenna can be soldered to the pad, or attached via contact springs. To provide a proper ground for the antenna, MC46 comes with a grounding pad located close to the antenna pad. The positions of both pads can be seen from Figure 28 and Figure 40. The grounding pad should be connected to the ground plane of the application.

When you decide to use the antenna pad take into account that the pad has not been intended as antenna reference point (ARP) for the Siemens MC46 type approval. The antenna pad is provided only as an alternative option which can be used, for example, if the recommended Hirose connection does not fit into your antenna design.

Also, consider that according to the GSM recommendations TS 45.005 and TS 51.010-01 a 50Ω connector is mandatory for type approval measurements. This requires GSM devices with an integral antenna to be temporarily equipped with a suitable connector or a low loss RF cable with adapter.

To prevent damage to the module and to obtain long-term solder joint properties you are advised to maintain the standards of good engineering practice for soldering.

MC46 material properties:

MC46 PCB:	FR4
Antenna pad:	Gold plated pad

4.1.1.1 Suitable cable types

For direct solder attachment, we suggest to use the following cable types:

- RG316/U 50Ω coaxial cable
- 1671A 50Ω coaxial cable

Suitable cables are offered, for example, by IMS Connector Systems. For further details and other cable types please contact http://www.imscs.com.

4.1.2 Hirose antenna connector

MC46 uses an ultra-miniature SMT antenna connector supplied from Hirose Ltd. The product name is:

U.FL-R-SMT

The position of the antenna connector on the MC46 board can be seen in Figure 39.

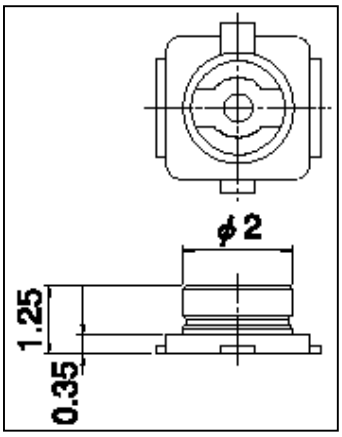

Figure 31: Mechanical dimensions of U.FL-R-SMT connector

Table 22: Product specifications of U.FL-R-SMT connector

Item	Specification	Conditions
Ratings		
Nominal impedance	50 Ω	Operating temp:-40°c to + 90°C Operating humidity: max. 90%
Rated frequency	DC to 3 GHz	
Mechanical characteristics		
Female contact holding force	0.15 N min	Measured with a ∅ 0.475 pin gauge
Repetitive operation	Contact resistance: Center 25 mΩ Outside 15mΩ	30 cycles of insertion and disengagement
Vibration	No momentary disconnections of 1 µs; No damage, cracks and looseness of parts	Frequency of 10 to 100 Hz, single amplitude of 1.5 mm, acceleration of 59 m/s^2, for 5 cycles in the direction of each of the 3 axes
Shock	No momentary disconnections of 1 µs. No damage, cracks and looseness of parts.	Acceleration of 735 m/s^2, 11 ms duration for 6 cycles in the direction of each of the 3 axes
Environmental characteristics		
Humidity resistance	No damage, cracks and looseness of parts. Insulation resistance: 100 MΩ min. at high humidity 500 MΩ min when dry	Exposure to 40°C, humidity of 95% for a total of 96 hours
Temperature cycle	No damage, cracks and looseness of parts. Contact resistance: Center 25 mΩ Outside 15mΩ	Temperature: +40°C → 5 to 35°C → +90°C → 5 to 35°C Time: 30 min. → within 5 min. → 30 min. within 5 min
Salt spray test	No excessive corrosion	48 hours continuous exposure to 5% salt water

Table 23: Material and finish of U.FL-R-SMT connector and recommended plugs

Part	Material	Finish
Shell	Phosphor bronze	Silver plating
Male center contact	Brass	Gold plating
Female center contact	Phosphor bronze	Gold plating
Insulator	Plug: PBT Receptacle: LCP	Black Beige

Mating plugs and cables can be chosen from the Hirose U.FL Series. Examples are shown below and listed in Table 24. For latest product information please contact your Hirose dealer or visit the Hirose home page, for example http://www.hirose.com.

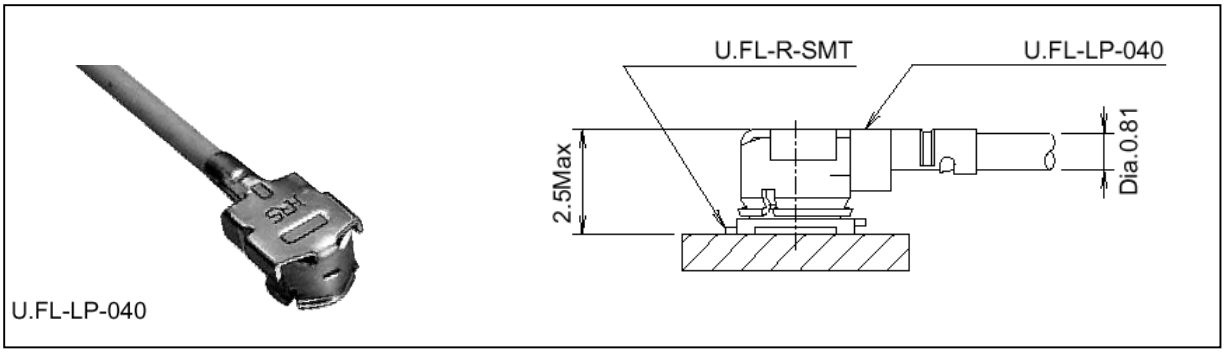

Figure 32: U.FL-R-SMT connector with U.FL-LP-040 plug

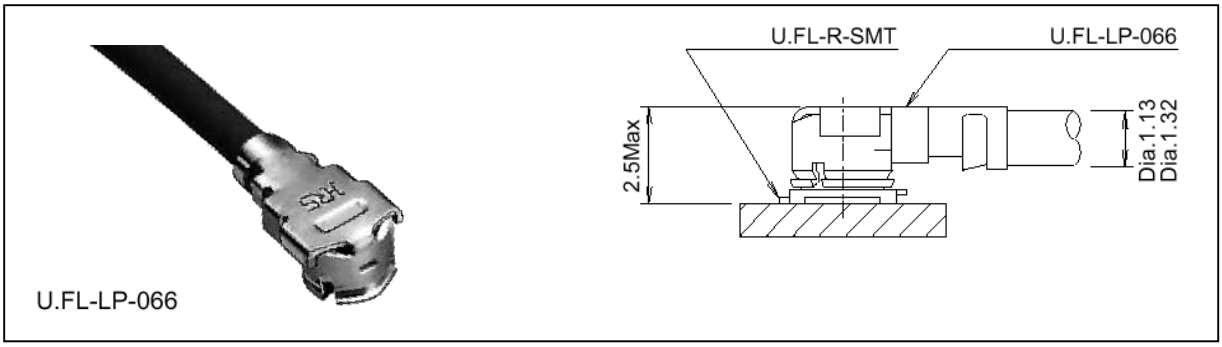

Figure 33: U.FL-R-SMT connector with U.FL-LP-066 plug

In addition to the connectors illustrated above, the U.FL-LP-(V)-040(01) version is offered as an extremely space saving solution. This plug is intended for use with extra fine cable (up to ∅ 0.81 mm) and minimizes the mating height to 2 mm. See Figure 34 which shows the Hirose datasheet.

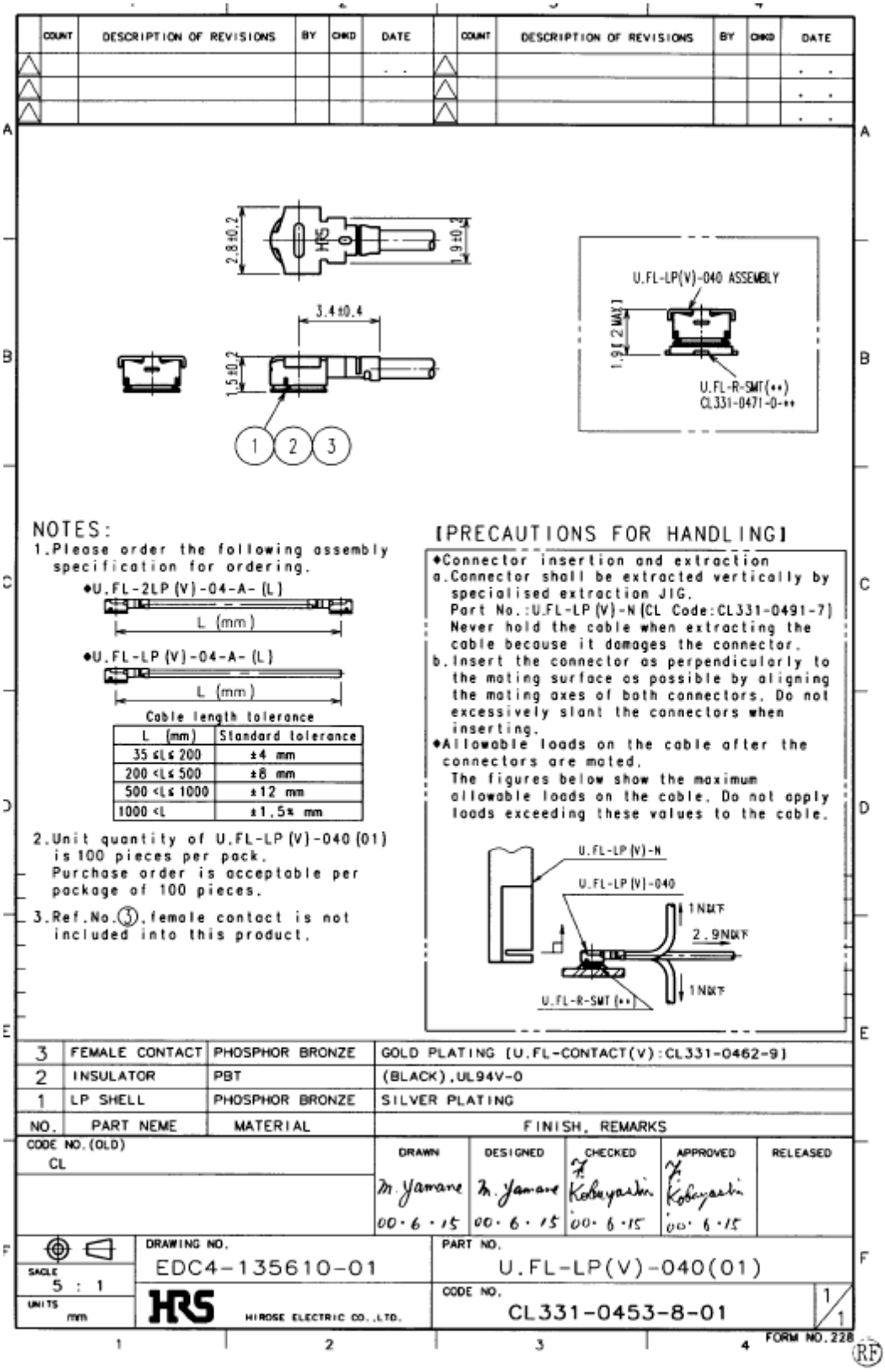

Figure 34: Specifications of U.FL-LP-(V)-040(01) plug

Table 24: Ordering information for Hirose U.FL Series

Item	Part number	HRS number
Connector on MC46	U.FL-R-SMT	CL331-0471-0-10
Right-angle plug shell for ∅ 0.81 mm cable	U.FL-LP-040	CL331-0451-2
Right-angle plug for ∅ 0.81 mm cable	U.FL-LP(V)-040 (01)	CL331-053-8-01
Right-angle plug for ∅ 1.13 mm cable	U.FL-LP-066	CL331-0452-5
Right-angle plug for ∅ 1.32 mm cable	U.FL-LP-066	CL331-0452-5
Extraction jig	E.FL-LP-N	CL331-04441-9

5 Electrical, reliability and radio characteristics

5.1 Absolute maximum ratings

The absolute maximum ratings stated in Table 25 are stress ratings under non-operating conditions. Stresses beyond any of these limits will cause permanent damage to MC46.

Table 25: Absolute maximum ratings

Parameter	Min	Max	Unit
Supply voltage BATT+	-0.3	5.0	V
Voltage at digital pins	-0.3	3.3	V
Voltage at analog pins	-0.3	3.0	V
Voltage at digital / analog pins in POWER DOWN mode	-0.25	+0.25	V
Voltage at POWER pin		15	V
Voltage at CHARGE pin		15	V
Differential load resistance between EPNx and EPPx	15		Ω

5.2 Operating temperatures

Test conditions were specified in accordance with IEC 60068-2 (still air). The values stated below are in compliance with GSM recommendation TS 51.010-01.

Table 26: Operating temperatures

Parameter	Min	Typ	Max	Unit
Ambient temperature (according to GSM 11.10)	-20	25	55	°C
Restricted operation *)	-25 to -20		55 to 70	°C
Automatic shutdown MC46 board temperature Battery temperature	 -29 -18		 ≥70**) ≥60	 °C °C
Charging temperature (software controlled fast charging)	0		+45	°C

*) MC46 works, but deviations from the GSM specification may occur.

**) Consider the ratio of output power, supply voltage and operating temperature: To achieve $T_{amb\ max}$ = 70°C and, for example, GSM 850 PCL5 the supply voltage must not be higher than 4.0V.

5.3 Electrical specifications of the application interface

Please note that the reference voltages listed in Table 27 are the values measured directly on the MC46 module. They do not apply to the accessories connected.
If an input pin is specified for $V_{i,h,max}$ = 3.3V, be sure never to exceed the stated voltage. The value 3.3V is an absolute maximum rating.
The Hirose DF12C board-to-board connector on MC46 is a 50-pin double-row receptacle. The names and the positions of the pins can be seen from Figure 35 which shows the top view of MC46.

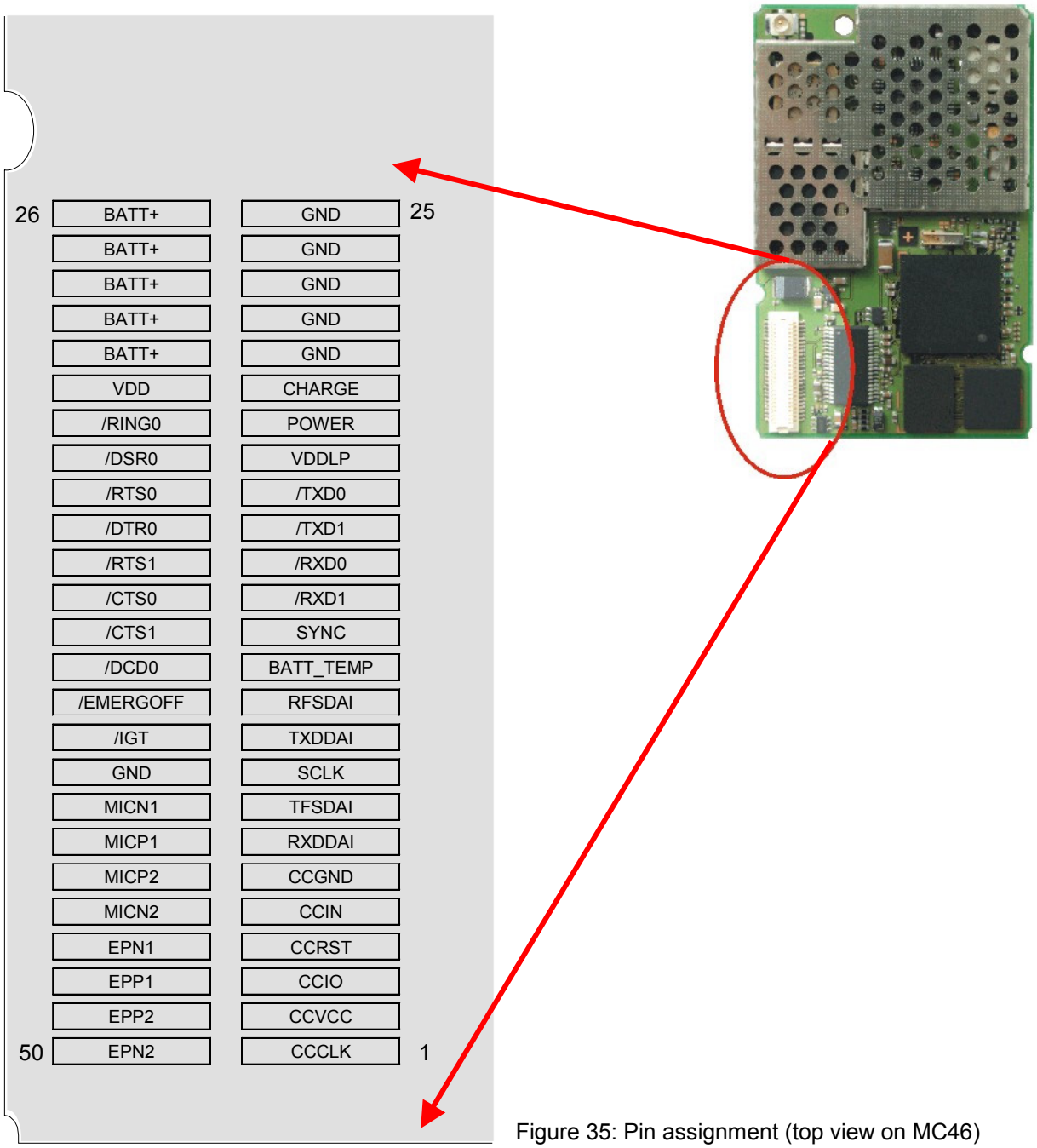

Figure 35: Pin assignment (top view on MC46)

Table 27: Electrical description of application interface

Function	Signal name	IO	Signal form and level	Comments
Power supply	BATT+	I	V_I = 3.2V to 4.5V $V_I$norm = 4.1V Inorm ≈ 2A, Imax < 3A (during Tx burst) 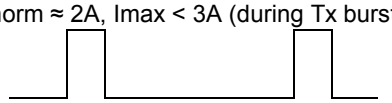 1 Tx: peak current 577µs every 4.616ms 2 Tx: peak current 1154µs every 4.616ms	Power supply input. 5 BATT+ pins to be connected in parallel. 5 GND pins to be connected in parallel. The power supply must be able to meet the requirements of current consumption in a Tx burst (up to 3A). Sending with two timeslots doubles the duration of current pulses to 1154µs (every 4.616ms)!
	GND			
Charge interface	POWER	I	$V_I$min = 3.0V $V_I$max = 15V	This line signalizes to the processor that the charger is connected. If unused keep pin open.
	BATT_TEMP	I	Connect NTC with R_{NTC} ≈ 10kΩ @ 25°C to ground.	Input to measure the battery temperature over NTC resistor. NTC should be installed inside or near battery pack to enable the charging algorithm and deliver temperature values. If unused keep pin open.
	CHARGE	O	I_{CHARGE} = -300µA ... -600µA @ 3V < V_{CHARGE} < V_{LOAD}	This line is a current source for the charge FET with a 10kΩ resistance between gate and source. If unused keep pin open.
External supply voltage	VDD	O	VDDmin = 2.84V, VDDmax = 2.96V Imax = -10mA $C_L$max = 1µF	Supply voltage, e.g. for an external LED or level shifter. The external digital logic must not cause any spikes or glitches on voltage VDD. Not available in POWER DOWN mode. VDD signalizes the “ON” state of the module. If unused VDD keep pin open.

Function	Signal name	IO	Signal form and level	Comments
VDD Low Power	VDDLP	I/O	R_I =1kΩ $V_O$max ≈ 4.0V (output) $V_I$min = 2.2V, $V_I$max = 5.5V (input) $I_I$typ = 10µA at BATT+ = 0V Mobile in POWER DOWN mode: $V_I$min = 1.2V	Supplies the RTC with power via an external capacitor or buffer battery if no V_{BATT+} is applied. If unused keep pin open.
Ignition	/IGT	I	R_I ≈ 100kΩ, C_I ≈ 1nF V_{IL}max = 0.5V at Imax = -20µA V_{Open}max = 2.3V ON ~~~|____|~~~ Active Low ≥ 100ms	Input to switch the mobile ON. The line must be driven low by an Open Drain or Open Collector driver.
Emergency shutdown (Watchdog)	/EMERGOFF	I	R_I ≈22kΩ V_{IL}max = 0.5V at Imax = -100µA V_{Open}max = 2.73V Signal ~~~|_____|~~~ Active Low ≥ 3.2s Watchdog: V_{OL}max = 0.35V at I = 10µA V_{OH}min= 2.25V at I = -10µA $f_O$min = 0.16Hz $f_O$max = 1.55Hz	This line must be driven by an Open Drain or Open Collector driver. Emergency shutdown deactivates the power supply to the module. The module can be reset if /IGT is activated after emergency shutdown. To switch the mobile off use the AT^SMSO command. /EMERGOFF also indicates the internal watchdog function. To avoid floating if pin is high impedance, use pull-down resistor tied to GND. See Chapter 3.3.2.1. If unused keep pin open.
Synchroni-zation	SYNC	O	V_{OL}max = 0.2V at I = 1mA V_{OH}min = 2.35V at I = -1mA V_{OH}max = 2.73V 1 Tx: 877µs impulse each 4.616ms and 2 Tx: 1454µs impulse each 4.616ms, with 300µs forward time.	Indicates increased current consumption during uplink transmission burst. Note that timing is different during handover. Alternatively used to control status LED (see Chapter 3.12.2.2). If unused keep pin open.

Function	Signal name	IO	Signal form and level	Comments
SIM interface	CCIN	I	$R_I \approx 100k\Omega$ V_{IL}max = 0.5V V_{IH}min = 2.15V at I = 20µA, V_{IH}max = 3.3V at I = 30µA	CCIN = high, SIM card holder closed (no card recognition) Maximum cable length 200mm to SIM card holder. All signals of SIM interface are protected against ESD with a special diode array. Usage of CCGND is mandatory.
	CCRST	O	$R_O \approx 47\Omega$ V_{OL}max = 0.25V at I = 1mA V_{OH}min = 2.3V at I = -1mA V_{OH}max = 2.73V	
	CCIO	IO	$R_I \approx 10k\Omega$ V_{IL}max = 0.5V V_{IH}min = 1.95V, V_{IH}max = 3.3V $R_O \approx 220\Omega$ V_{OL}max = 0.4V at I = 1mA V_{OH}min = 2.15V at I = -1mA V_{OH}min = 2.55V at I = -20µA V_{OH}max = 2.96V	
	CCCLK	O	$R_O \approx 220\Omega$ V_{OL}max = 0.4V at I = 1mA V_{OH}min = 2.15V at I = -1mA V_{OH}max = 2.73V	
	CCVCC	O	$R_O$max = 5Ω CCVCCmin = 2.84V, CCVCCmax = 2.96V Imax = -20mA	
	CCGND		Ground	
ASC0 interface	/RXD0	O	V_{OL}max = 0.2V at I = 1mA V_{OH}min = 2.35V at I = -1mA V_{OH}max = 2.73V V_{IL}max = 0.5V V_{IH}min = 1.95V, V_{IH}max = 3.3V /DTR0, RTS0: Imax = -90µA at V_{IN} = 0V /TXD0: Imax = -30µA at V_{IN} = 0V	First serial interface for AT commands or data stream. To avoid floating if output pins are high-impedance, use pull-up resistors tied to VDD or pull-down resistors tied to GND. See Chapter 3.3.2.1. If unused keep pins open.
	/TXD0	I		
	/CTS0	O		
	/RTS0	I		
	/DTR0	I		
	/DCD0	O		
	/DSR0	O		
	/RING0	O		
ASC1 interface	/RXD1	O	V_{OL}max = 0.2V at I = 1mA V_{OH}min = 2.35V at I = -1mA V_{OH}max = 2.73V V_{IL}max = 0.5V V_{IH}min = 1.95V, V_{IH}max = 3.3V $I_I$max = -90µA at V_{IN} = 0V	Second serial interface for AT commands. To avoid floating if output pins are high-impedance, use pull-up resistors tied to VDD or pull-down resistors tied to GND. See Chapter 3.3.2.1. If unused keep pins open.
	/TXD1	I		
	/CTS1	O		
	/RTS1	I		

Function	Signal name	IO	Signal form and level	Comments
Digital audio interface	RFSDAI	I	V_{OL}max = 0.2V at I = 1mA V_{OH}min = 2.35V at I = -1mA V_{OH}max = 2.73V V_{IL}max = 0.5V V_{IH}min = 1.95V, V_{IH}max = 3.3V $I_I$max = 330µA at V_{IN} = 3.3V	If unused keep pins open.
	RXDDAI	I		
	SCLK	I		
	TFSDAI	O		
	TXDDAI	O		
Analog audio interfaces Explanation of signal names: P = positive, N = negative	EPP2	O	$V_O$max = 3.7Vpp See also Table 31.	The audio output is balanced and can directly operate an earpiece. If unused keep pins open.
	EPN2	O		
	EPP1	O	$V_O$max = 3.7Vpp See also Table 31.	Balanced audio output. Can be used to directly operate an earpiece. If unused keep pins open.
	EPN1	O		
	MICP1	I	R_I ≈ 50kΩ differential $V_I$max = 1.03Vpp See also Table 32.	Balanced microphone input. To be decoupled with 2 capacitors (C_K = 100nF), if connected to a microphone or another device. If unused keep pins open.
	MICN1	I		
	MICP2	I	R_I = 2kΩ differential $V_I$max = 1.03Vpp See also Table 32.	Balanced microphone input. Can be used to directly feed an active microphone. If used for another signal source, e.g. op amp, to be decoupled with capacitors. If unused keep pins open.
	MICN2	I		
	AGND			Separate ground connection for external audio circuits.

5.4 Power supply ratings

Table 28: Power supply ratings

Parameter	Description	Conditions	Min	Typ	Max	Unit
BATT+	Supply voltage	Reference points on MC46: TP BATT+ and TP GND (see Figure 40). Voltage must stay within the min/max values, including voltage drop, ripple, spikes.	3.2	4.1	4.5	V
	Voltage drop during transmit burst	Normal condition, power control level for $P_{out\ max}$			400	mV
	Voltage ripple	Normal condition, power control level for $P_{out\ max}$ @ f<200kHz @ f>200kHz			 50 2	mV
I_{BATT+}	Average supply current[3]	POWER DOWN mode		50	100	µA
		SLEEP mode @ DRX = 6		3		mA
		IDLE mode GSM 850 GSM 1800/1900		15 15		mA
		TALK mode GSM 850[1] GSM 1800/1900[2]		300[4] 270[4]	400	mA
		IDLE GPRS GSM 850 GSM 1800/1900		15 15		mA
		DATA mode GPRS, (4 Rx, 1 Tx) GSM 850[1] GSM 1800/1900[2]		360[4] 330[4]	460	mA
		DATA mode GPRS, (3 Rx, 2 Tx) GSM 850[1] GSM 1800/1900[2]		590[4] 540[4]	840	mA
	Peak supply current (during transmission slot every 4.6ms)	Power control level PCL 5		2	3	A

1) Power control level PCL 5
2) Power control level PCL 0
3) All average supply current values @ I_{VDD} = 0mA
4) Stated value applies to an average antenna performance.

5.4.1 Current consumption during transmit burst

A Smith chart shows the complex impedance plane. The Smith chart in Figure 36 illustrates the dependence between the typical peak current consumption of the application during a transmit burst and an impedance connected to the antenna reference point (ARP).

As shown in Figure 36, the typical current consumption is about 2000 mA, but the current is maximized when the minimum supply voltage is used together with a total reflection at the RF interface.

The Smith chart in Figure 36 shows the current consumption at the following conditions:

- Channel with the highest current consumption: 836.4 MHz (Channel 189)
- T_{amb} = 25°C
- Maximum peak current = 3.0A
- Minimum supply voltage during burst = 3.35V

This measurement case was performed with a total resistance of about 100mΩ in the current path.

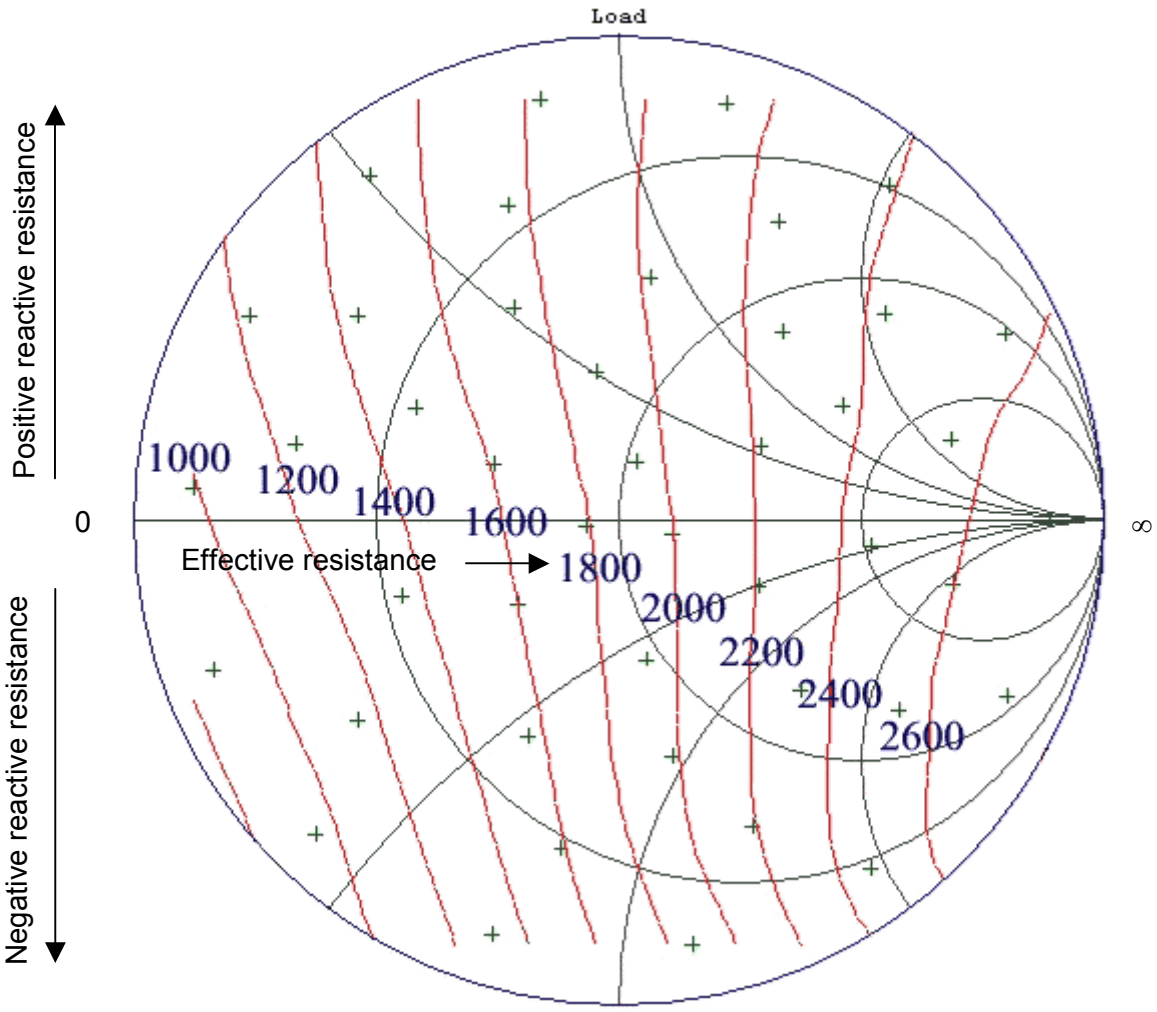

Figure 36: Peak current during transmit burst in mA vs. antenna impedance

5.5 Electrical characteristics of the voiceband part

5.5.1 Setting audio parameters by AT commands

The audio modes 2 to 6 can be adjusted according to the parameters listed below. Each audio mode is assigned a separate set of parameters.

Table 29: Audio parameters adjustable by AT command

Parameter	Influence to	Range	Gain range	Calculation
inBbcGain	MICP/MICN analog amplifier gain of baseband controller before ADC	0...7	0...42dB	6dB steps
inCalibrate	digital attenuation of input signal after ADC	0...32767	-∞...0dB	20 * log (inCalibrate/ 32768)
outBbcGain	EPP/EPN analog output gain of baseband controller after DAC	0...3	0...-18dB	6dB steps
outCalibrate[n] n = 0...4	digital attenuation of output signal after speech decoder, before summation of sidetone and DAC present for each volume step[n]	0...32767	-∞...+6dB	20 * log (2 * outCalibrate[n]/ 32768)
sideTone	digital attenuation of sidetone is corrected internally by outBbcGain to obtain a constant sidetone independent of output volume	0...32767	-∞...0dB	20 * log (sideTone/ 32768)

Note: The parameters inCalibrate, outCalibrate and sideTone accept also values from 32768 to 65535. These values are internally truncated to 32767.

5.5.2 Audio programming model

The audio programming model shows how the signal path can be influenced by varying the AT command parameters. The model is the same for all three interfaces, except for the parameters <outBbcGain> and <inBbcGain> which cannot be modified if the digital audio interface is being used, since in this case the DAC is switched off.

The parameters inBbcGain and inCalibrate can be set with AT^SNFI. All the other parameters are adjusted with AT^SNFO.

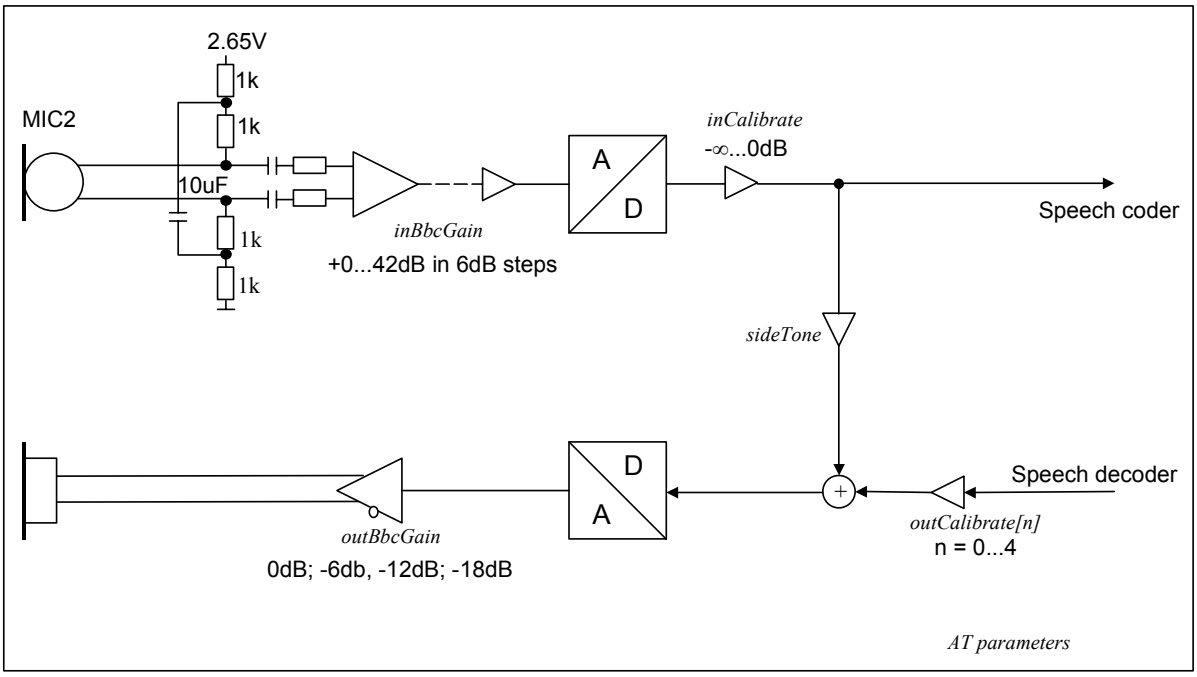

Figure 37: AT audio programming model

5.5.3 Characteristics of audio modes

The electrical characteristics of the voiceband part depend on the current audio mode set with the AT^SNFS command.

Table 30: Voiceband characteristics (typical)

Audio mode no. AT^SNFS=	**1** (Default settings, not adjustable)	**2**	**3**	**4**	**5**	**6**
Name	Default Handset	Basic Handsfree	Headset	User Handset	Plain Codec 1	Plain Codec 2
Purpose	DSB with Votronic handset	Siemens Car Kit Portable	Siemens Headset	DSB with individual handset	Direct access to speech coder	Direct access to speech coder
Gain setting via AT command. Defaults: inBbcGain outBbcGain	Fix 4 (24dB) 1 (-6dB)	Adjustable 2 (12dB) 1 (-6dB)	Adjustable 5 (30dB) 2 (-12dB)	Adjustable 4 (24dB) 1 (-6dB)	Adjustable 0 (0dB) 0 (0dB)	Adjustable 0 (0dB) 0 (0dB)
Default audio interface	1	2	2	1	1	2 [4)]
Power supply	ON (2.65V)	ON (2.65V)	ON (2.65V)	ON (2.65V)	OFF (GND)	OFF (GND)
Sidetone	ON	---	Adjustable	Adjustable	Adjustable	Adjustable
Volume control	OFF	Adjustable	Adjustable	Adjustable	Adjustable	Adjustable
Limiter (receive)	ON	ON	ON	ON	---	---
Compressor (receive)	---	OFF[1)]	---	---	---	---
AGC (send)	---	---	ON	---	---	---
Echo control (send)	Suppression	Cancellation + suppression	---	Suppres-sion	---	---
Noise suppression[2)]	---	up to 10dB	10dB	---	---	---
MIC input signal for 0dBm0 @ 1024 Hz (default gain)	23mV	58mV	7.5mV @ -3dBm0 due to AGC	23mV	315mV	315mV
EP output signal in mV rms. @ 0dBm0, 1024 Hz, no load (default gain); @ 3.14 dBm0	284mV	120mV default @ max volume	300mV default @ max volume	284mV default @ max volume	895mV 3.7Vpp	895mV 3.7Vpp
Sidetone gain at default settings	22.8dB	-∞ dB	Affected by AGC, 13dB @ 7.5mV (MIC)	22.8dB	-2.5dB @ sideTone = 8192[3)]	-2.5dB @ sideTone = 8192[3)]

1) Adaptive, receive volume increases with higher ambient noise level. The compressor can be activated by loading an application specific audio parameter set (see [8]).

2) In audio modes with noise reduction, the microphone input signal for 0dBm0 shall be measured with a sine burst signal for a tone duration of 5 seconds and a pause of 2 sec. The

sine signal appears as noise and, after approx. 12 sec, is attenuated by the noise reduction by up to 10dB.

3) See AT^SNFO command in [1].

4) Audio mode 5 and 6 are identical. With AT^SAIC, you can easily switch mode 5 to the second interface. Therefore, audio mode 6 is only kept for compatibility to earlier Siemens GSM products.

Note: With regard to acoustic shock, the cellular application must be designed to avoid sending false AT commands that might increase amplification, e.g. for a high sensitive earpiece. A protection circuit should be implemented in the cellular application.

5.5.4 Voiceband receive path

Test conditions:

- The values specified below were tested to 1kHz and 0dB gain stage, unless otherwise stated.
- Parameter setup: gs = 0dB means audio mode = 5 for EPP1 to EPN1 and 6 for EPP2 to EPN2, inBbcGain= 0, inCalibrate = 32767, outBbcGain = 0, OutCalibrate = 16384, sideTone = 0.

Table 31: Voiceband receive path

Parameter	Min	Typ	Max	Unit	Test condition / remark
Differential output voltage (peak to peak)	3.33	3.7	4.07	V	from EPPx to EPNx *gs* = 0dB @ 3.14 dBm0 no load
Differential output gain settings (*gs*) at 6dB stages (outBbcGain)	-18		0	dB	Set with AT^SNFO
Fine scaling by DSP (outCalibrate)	-∞		0	dB	Set with AT^SNFO
Output differential DC offset			100	mV	*gs* = 0dB, outBbcGain = 0 and -6dB
Differential output resistance		2		Ω	from EPPx to EPNx
Differential load capacitance			1000	pF	from EPPx to EPNx
Absolute gain accuracy			0.8	dB	Variation due to change in temperature and life time
Attenuation distortion			1	dB	for 300...3900Hz, @ EPPx/EPNx (333Hz) / @ EPPx/EPNx (3.66kHz)
Out-of-band discrimination	60			dB	for *f* > 4kHz with in-band test signal@ 1kHz and 1kHz RBW

gs = gain setting

5.5.5 Voiceband transmit path

Test conditions:

- The values specified below were tested to 1kHz and 0dB gain stage, unless otherwise stated.
- Parameter setup: Audio mode = 5 for MICP1 to MICN1 and 6 for MICP2 to MICN2, inBbcGain= 0, inCalibrate = 32767, outBbcGain = 0, OutCalibrate = 16384, sideTone = 0

Table 32: Voiceband transmit path

Parameter	Min	Typ	Max	Unit	Test condition/Remark
Input voltage (peak to peak) MICP1 to MICN1, MICP2 to MICN2			1.03	V	
Input amplifier gain in 6dB steps (inBbcGain)	0		42	dB	Set with AT^SNFI
Fine scaling by DSP (inCalibrate)	-∞		0	dB	Set with AT^SNFI
Input impedance MIC1		50		kΩ	
Input impedance MIC2		2.0		kΩ	
Microphone supply voltage ON Ri = 4kΩ (MIC2 only)	2.57 2.17 1.77	2.65 2.25 1.85	2.73 2.33 1.93	V V V	no supply current @ 100µA @ 200µA
Microphone supply voltage OFF Ri = 4kΩ (MIC2 only)		0		V	
Microphone supply in POWER DOWN mode					See Figure 17

5.6 Air interface

Test conditions: All measurements have been performed at T_{amb}= 25°C, $V_{BATT+\ nom}$ = 4.1V. The reference points used on MC46 are the BATT+ and GND contacts (test points are shown in Figure 40).

Table 33: Air Interface

Parameter		Min	Typ	Max	Unit
Frequency range	GSM 850	824.2		848.8	MHz
Uplink (MS → BTS)	GSM 1800	1710		1785	MHz
	GSM 1900	1850		1910	MHz
Frequency range	GSM 850	869.2		893.8	MHz
Downlink (BTS → MS)	GSM 1800	1805		1880	MHz
	GSM 1900	1930		1990	MHz
RF power @ ARP with 50Ω load	GSM 850[1)]	31	33	35	dBm
	GSM 1800[2)]	28	30	32	dBm
	GSM 1900	28	30	32	dBm
Number of carriers	GSM 850		123		
	GSM 1800		374		
	GSM 1900		299		
Duplex spacing	GSM 850		45		MHz
	GSM 1800		95		MHz
	GSM 1900		80		MHz
Carrier spacing			200		kHz
Multiplex, Duplex		TDMA / FDMA, FDD			
Time slots per TDMA frame			8		
Frame duration			4.616		ms
Time slot duration			577		µs
Modulation		GMSK			
Receiver input sensitivity @ ARP	GSM 850	-102	-106		dBm
BER Class II < 2.4%	GSM 1800	-102	-105		dBm
	GSM 1900	-102	-105		dBm

1) Power control level PCL 5

2) Power control level PCL 0

Table 34: Local oscillator and intermediate frequencies used by MC46

All frequencies in MHz		**Frequency Band**	**Channel**	**Local Oscillator**	**Intermediate Frequency**
GSM 850	TX	824.2 – 848.8	128 - 251	3612.8 – 3723.2	79
	RX	869.2 – 893.8	128 - 251	3476.0 – 3575.2	0
PCN 1800	TX	1710.2 – 1733.0	512 – 626	3580.4 – 3626.0	80
	TX	1733.2 – 1759.8	627 – 760	3628.4 – 3681.6	81
	TX	1760.0 – 1784.8	761 – 885	3680.0 – 3729.6	80
	RX	1805.2 – 1879.8	512 – 885	3610.4 – 3759.6	0
PCS 1900	TX	1850.2 – 1909.8	512 – 810	3860.4 – 3979.6	80
	RX	1930.2 – 1989.8	512 – 810	3860.4 – 3979.6	0

5.7 Electrostatic discharge

The GSM engine is not protected against Electrostatic Discharge (ESD) in general. Consequently, it is subject to ESD handling precautions that typically apply to ESD sensitive components. Proper ESD handling and packaging procedures must be applied throughout the processing, handling and operation of any application that incorporates a MC46 module.

Special ESD protection provided on MC46:
Antenna interface: one spark discharge line (spark gap)
SIM interface: clamp diodes for protection against overvoltage.
The remaining ports of MC46 are not accessible to the user of the final product (since they are installed within the device) and therefore, are only protected according to the “Human Body Model” requirements.

MC46 has been tested according to the EN 61000-4-2 standard. The measured values can be gathered from the following table.

Table 35: Measured electrostatic values

Specification / Requirements	Contact discharge	Air discharge
ETSI EN 301 489-7		
ESD at SIM port	± 4kV	± 8kV
ESD at antenna port	± 4kV	± 8kV
Human Body Model (Test conditions: 1.5 kΩ, 100 pF)		
ESD at the module	± 1kV	

Note: Please note that the values may vary with the individual application design. For example, it matters whether or not the application platform is grounded over external devices like a computer or other equipment, such as the Siemens reference application described in Chapter 7.

5.8 Reliability characteristics

The test conditions stated below are an extract of the complete test specifications.

Table 36: Summary of reliability test conditions

Type of test	Conditions	Standard
Vibration	Frequency range: 10-20 Hz; acceleration: 3.1mm amplitude Frequency range: 20-500 Hz; acceleration: 5g Duration: 2h per axis = 10 cycles; 3 axes	DIN IEC 68-2-6
Shock half-sinus	Acceleration: 500g Shock duration: 1msec 1 shock per axis 6 positions (± x, y and z)	DIN IEC 68-2-27
Dry heat	Temperature: +70 ±2°C Test duration: 16 h Humidity in the test chamber: < 50%	EN 60068-2-2 Bb ETS 300019-2-7
Temperature change (shock)	Low temperature: -40°C ±2°C High temperature: +85°C ±2°C Changeover time: < 30s (dual chamber system) Test duration: 1 h Number of repetitions: 100	DIN IEC 68-2-14 Na ETS 300019-2-7
Damp heat cyclic	High temperature: +55°C ±2°C Low temperature: +25°C ±2°C Humidity: 93% ±3% Number of repetitions: 6 Test duration: 12h + 12h	DIN IEC 68-2-30 Db ETS 300019-2-5
Cold (constant exposure)	Temperature: -40 ±2°C Test duration: 16 h	DIN IEC 68-2-1

6 Mechanics

The following chapters describe the mechanical dimensions of MC46 and give recommendations for integrating MC46 into the host application.

6.1 Mechanical dimensions of MC46

Figure 38 shows the top view on MC46 and provides an overview of the mechanical dimensions of the board. For further details see Figure 39.

Size: 53 ±0.15 x 34 ±0.15 x 3.5±0.3 mm

Weight: 10g

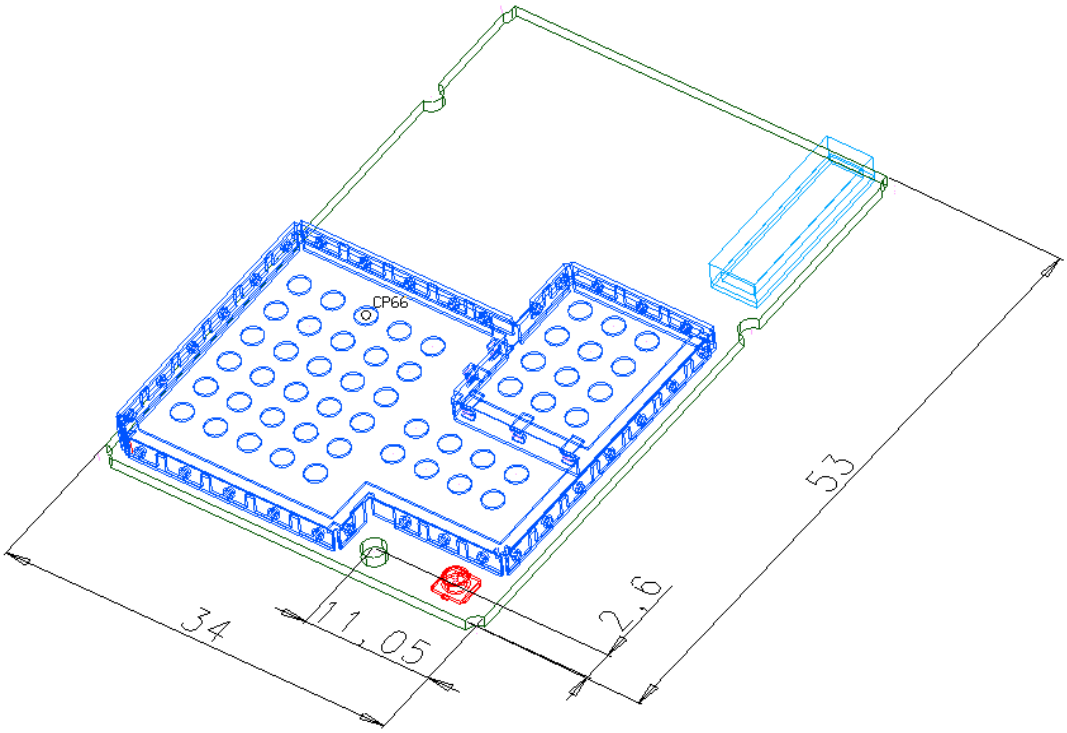

Figure 38: MC46 – top view

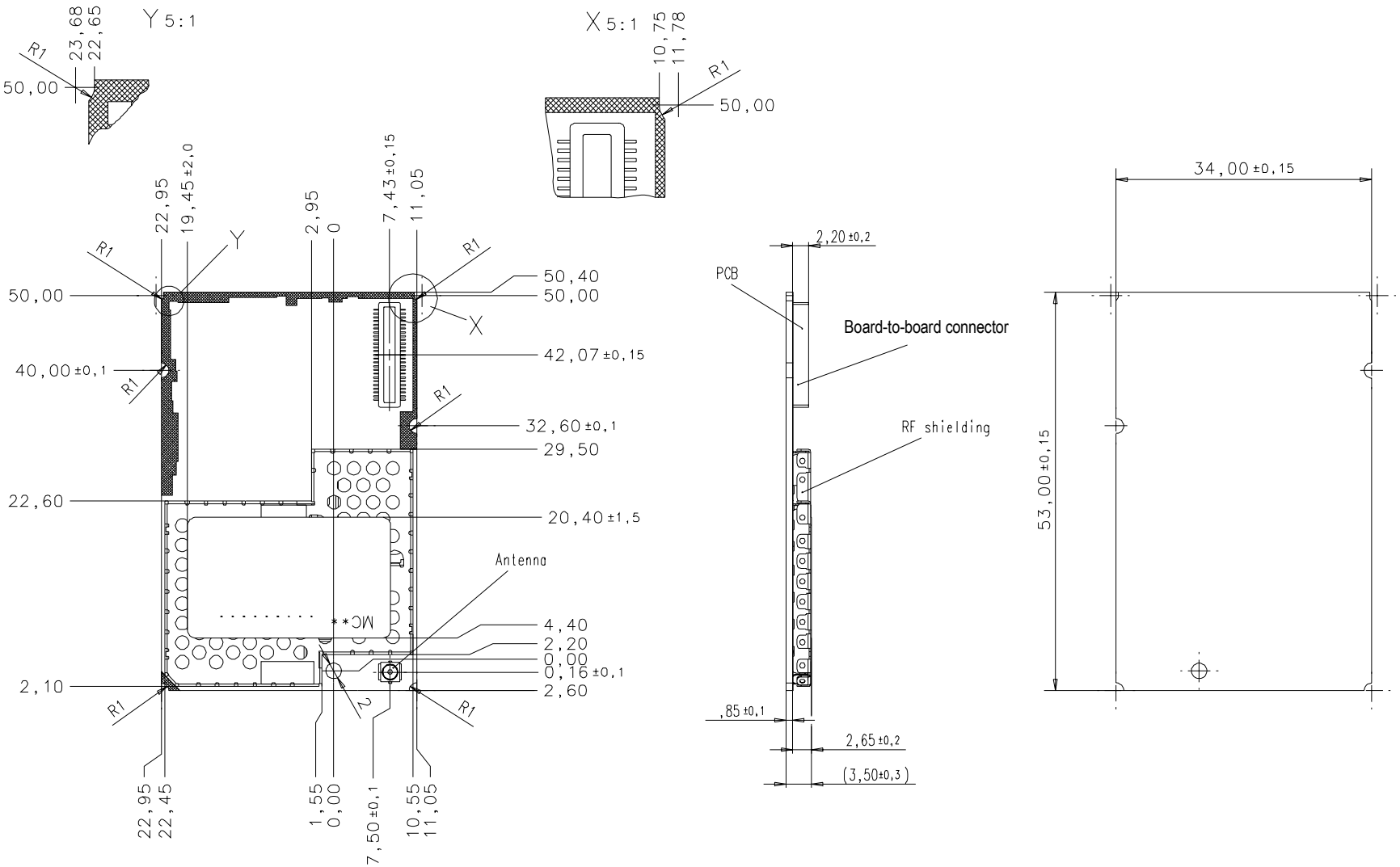

All dimensions in millimeter

Figure 39: Mechanical dimensions of MC46

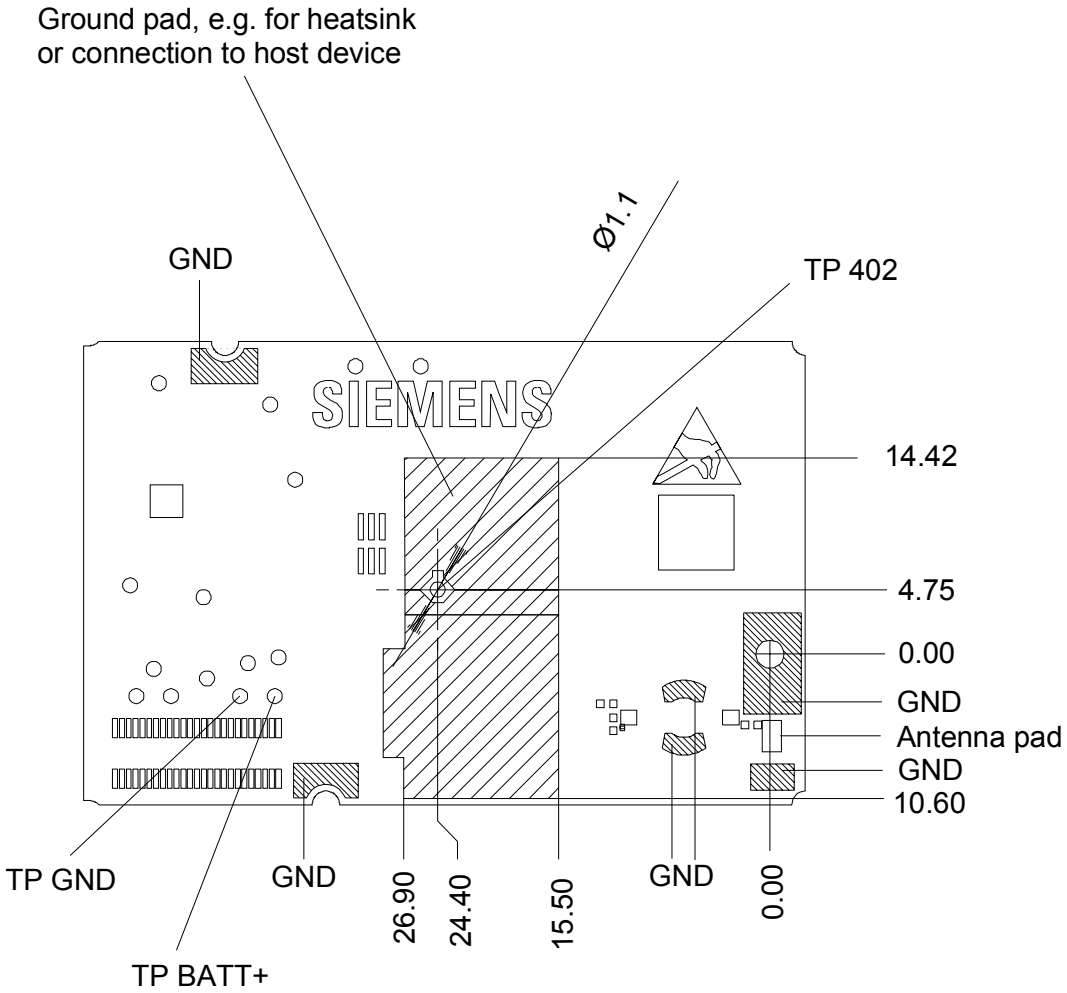

Figure 40: MC46 bottom view

6.2 Mounting MC46 onto the application platform

There are many ways to properly install MC46 in the host device. An efficient approach is to mount the MC46 PCB to a frame, plate, rack or chassis.

Fasteners can be M1.6 or M1.8 screws plus suitable washers, circuit board spacers, or customized screws, clamps, or brackets. Screws must be inserted with the screw head on the bottom of the MC46 PCB. This is necessary to avoid contacting the shielding covers on top.

In addition, the board-to-board connection can also be utilized to achieve better support.

A number of ground planes are provided on the bottom of the MC46 module, all of them illustrated in Figure 40. For proper grounding it is strongly recommended to use these ground planes in addition to the five GND pins of the board-to-board connector. To avoid short circuits ensure that the remaining sections of the MC46 PCB do not come into contact with the host device since there are a number of test points. The largest ground pad in the middle of the board can also be used to attach cooling elements, e.g. a heat sink or thermally conductive tape. Refer to Chapter 6.4 for an overview on a variety of cooling elements.

Particular attention should be paid to the test point TP 402. Placed beneath the large ground pad it has been added for manufacturing only. When the pad is used for grounding the unit or connecting a heat sink, extra care must be taken not to contact this test point. Figure 40 shows the positions of all test points.

To prevent mechanical damage, be careful not to force, bend or twist the module. Be sure it is positioned flat against the host device.

All the information you need to install an antenna is summarized in Chapter 4. Note that the antenna pad on the bottom of the MC46 PCB must not be influenced by any other PCBs, components or by the housing of the host device. It needs to be surrounded by a restricted space as described in Chapter 4.1.

6.3 Board-to-board connector

This chapter provides specifications for the 50-pin board-to-board connector which serves as physical interface to the host application. The receptacle assembled on the MC46 PCB is type Hirose DF12C. Mating headers from Hirose are available in different stacking heights.

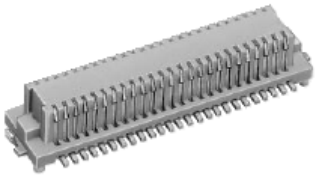

Figure 41: Hirose DF12C receptacle on MC46

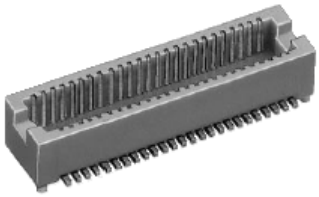

Figure 42: Header Hirose DF12 series

Table 37: Ordering information DF12 series

Item	Part number	Stacking height (mm)	HRS number
Receptacle on MC46	DF12C(3.0)-50DS-0.5V(81)	3 - 5	537-0694-9-81
Headers DF12 series	DF12E(3.0)-50DP-0.5V(81)	3.0	537-0834-6-**
	DF12E(3.5)-50DP-0.5V(81)	3.5	537-0534-2-**
	DF12E(4.0)-50DP-0.5V(81)	4.0	537-0559-3-**
	DF12E(5.0)-50DP-0.5V(81)	5.0	537-0584-0-**

Notes: The headers listed above are without boss and metal fitting. Please contact Hirose for details on other types of mating headers. Asterixed HRS numbers denote different types of packaging.

Table 38: Electrical and mechanical characteristics of the Hirose DF12C connector

Parameter	Specification (50 pin board-to-board connector)
Number of contacts	50
Quantity delivered	2000 connectors per tape & reel
Voltage	50V
Rated current	0.3A max per contact
Resistance	0.05Ω per contact
Dielectric withstanding voltage	500V RMS min
Operating temperature	-45°C...+125°C
Contact material	phosphor bronze (surface: gold plated)
Insulator material	PA , beige natural
Stacking height	3.0 mm ; 3.5 mm ; 4.0 mm ; 5.0 mm
Insertion force	21.8N
Withdrawal force 1st	10N
Withdrawal force 50th	10N
Maximum connection cycles	50

6.3.1 Mechanical dimensions of the Hirose DF12 connector

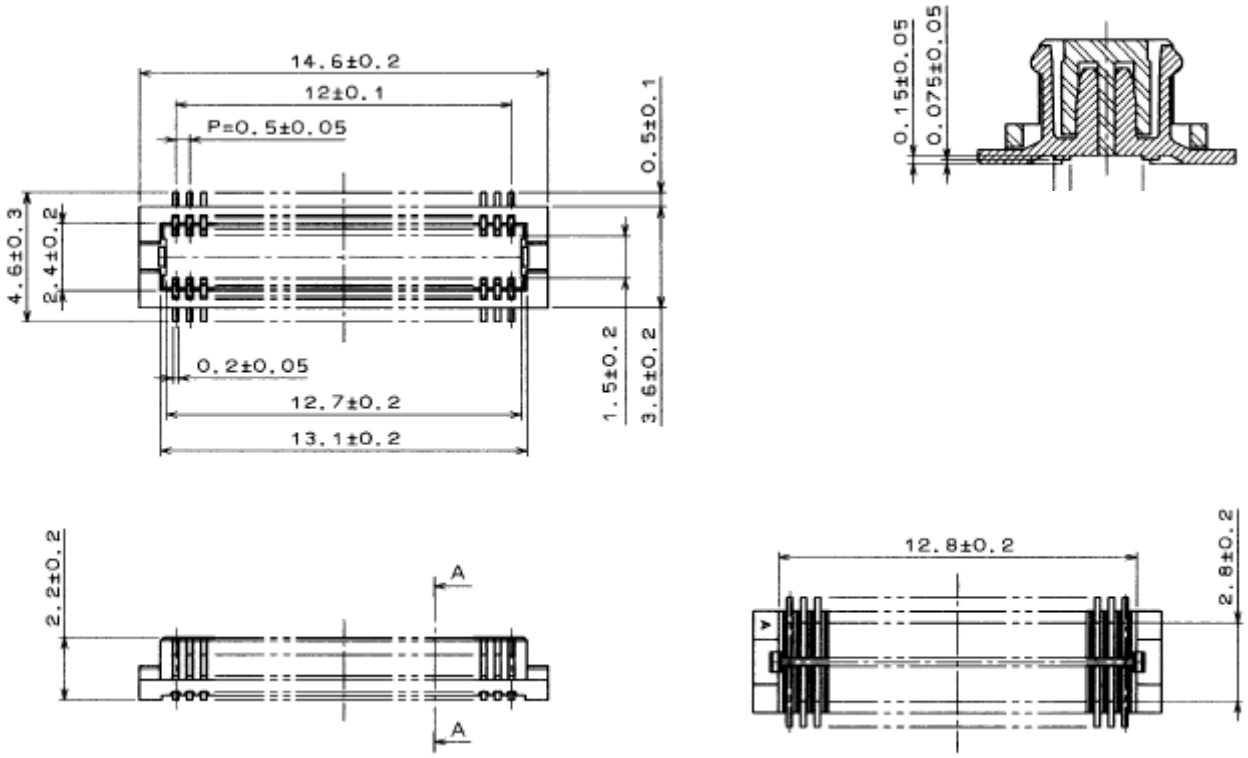

Figure 43: Mechanical dimensions of Hirose DF12 connector

6.3.2 Adapter cabling

The board-to-board connection is primarily intended for direct contact between both connectors. If this assembly solution does not fit into your application design ensure that the used adapter cable meets the following requirements:

- Maximum length: 200 mm
  It is recommended that the total cable length between the board-to-board connector pins on MC46 and the pins of the card holder does not exceed 200 mm in order to meet the specifications of 3GPP TS 51.010-1 and to satisfy the requirements of EMC compliance.
- Type of cable: Flexible cable or flexible printed circuit board designed to mate with the Hirose receptacle and headers specified above.

The equipment submitted for type approving the Siemens reference setup of MC46 includes a 160mm adapter cable. See Chapter 7.1.

6.4 Heat sinks and thermally conductive tapes

Thermal management solutions vary largely according to the usage of the final product and the design of the host device. Therefore, the focus of this chapter is on a brief overview of standard heat sinks and thermally conductive tapes that have been tested with MC46.

6.4.1 Test conditions and results

Table 39 shows the results of extensive testing based on different combinations of heat sinks and thermally conductive tapes.

All measurements were performed under the same test conditions:

- GPRS connection, Power control level 5, GSM Band: 850MHz
- GPRS Class 10 (3x downlink, 2x uplink), Coding Scheme CS-4
- $V_{BATT+\ nom}$ = 4.2V
- Ambient temperature: 55°C
- The conductive tapes were attached either to entire bottom area of the module (in Table 39 referred to as “Full area”), or only to the ground pad near the power amplifier (in Table 39 referred to as “PA only”).

Table 39: Tested heat sinks and thermally conductive tapes and test results

Manufacturer	Product name	Description	Rth	Website	Temperature reduction	Conductive tape positioned on
Test condition: Thermally conductive tape T2022 combined with different heat sinks (material characteristics of T2022: adhesive on both sides, silicon free, 100µm, Rth > 0,1 K/W, manufacturer: Balkhausen)						
Fischerelektronik	SK18	65mm x 37.5mm	3.75 K/W	www.fischerelektronik.de	12-15°C 5-10°C	Full area PA only
Fischerelektronik	ICK R		19 K/W	www.fischerelektronik.de	4-5°C	PA only
Fischerelektronik	ICK C17		17 K/W	www.fischerelektronik.de	3-4°C	PA only
Fischerelektronik	SFP 060-50 Aluminum Profile	80mm x 50mm x 8mm	Not specified	www.fischerelektronik.de	4-6°C	Full area
Fischerelektronik	SFP 007-50 Aluminum Profile	40mm x 50mm x 5mm	Not specified	www.fischerelektronik.de	1°C	Full area
Wakefield	Spezial A&D	13mm x 5mm	32 K/W	www.wakefield.com	2°C	PA only
Wakefield	Spezial A&D	19mm x 8mm	27 K/W	www.wakefield.com	2°C	PA only
Test condition: Heat sink SK 18 with conductive tape TAP 005						
Balkhausen	TAP 005	adhesive on both sides, silicon free, 125µm	>0,1 K/W	www.balkhausen.com	10-13°C	Full area

7 Reference Approval

7.1 Reference Equipment for Type Approval

The Siemens reference setup submitted to type approve MC46 consists of the following components:

- Siemens MC46 cellular engine
- Development Support Box (DSB45)
- Flex cable (160 mm) from Hirose DF12C receptacle on MC46 to Hirose DF12 connector on DSB45. Please note that this cable is not included in the scope of delivery of DSB45.
- SIM card reader integrated on DSB45
- Handset type Votronic HH-SI-30.3/V1.1/0
- PC as MMI

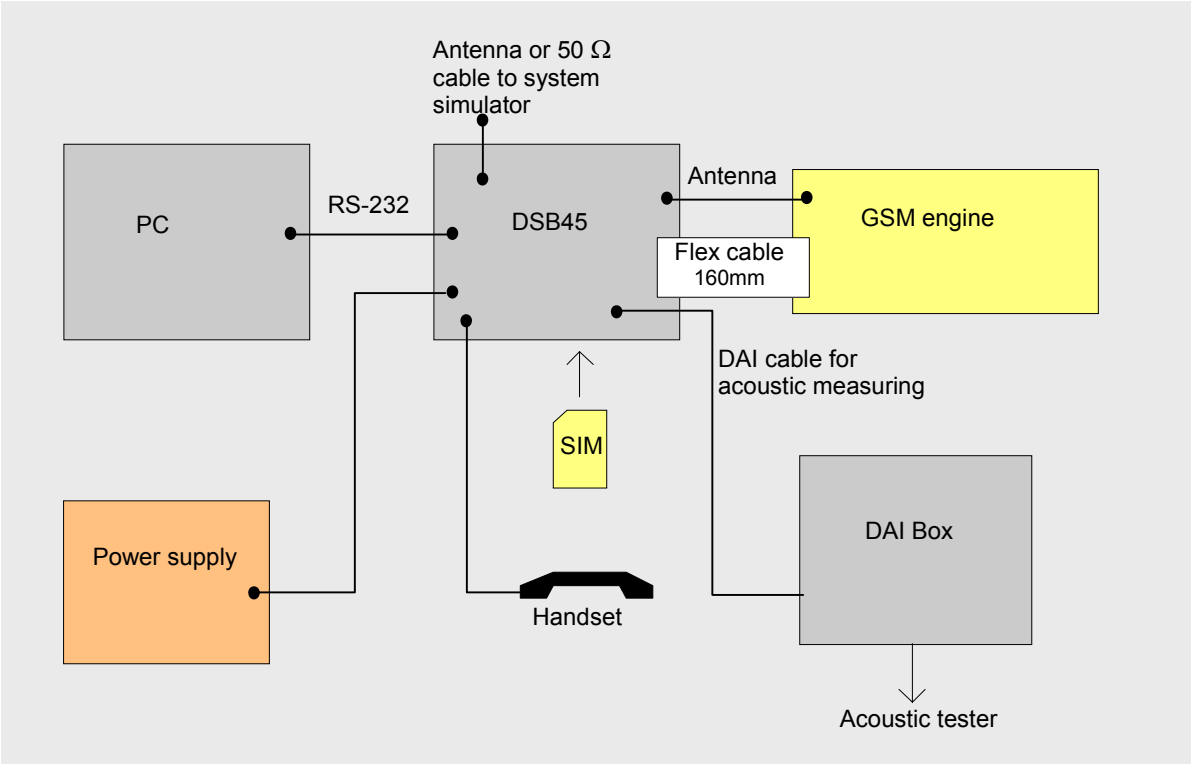

Figure 44: Reference equipment for approval

7.2 Compliance with FCC Rules and Regulations

The FCC Equipment Authorization Certification for the MC46 reference application described in Chapter 7.1 is listed under the

FCC identifier QIPMC46,
granted to Siemens AG.

The MC46 reference application registered under the above identifier is certified to be in accordance with the following Rules and Regulations of the Federal Communications Commission (FCC).

> "This device contains GSM 1800MHz function that is not operational in U.S. Territories. This device is to be used only for mobile and fixed applications. The antenna(s) used for this transmitter must be installed to provide a separation distance of at least 20 cm from all persons and must not be co-located or operating in conjunction with any other antenna or transmitter. Users and installers must be provided with antenna installation instructions and transmitter operating conditions for satisfying RF exposure compliance. Antennas used for this OEM module must not exceed 7dBi (GSM 1900) and 1.4dBi (GSM 850) gain for mobile and fixed operating configurations. This device is approved as a module to be installed in other devices.
> Each OEM must obtain their own Certification for each device containing this module."

IMPORTANT: Manufacturers of mobile or fixed devices incorporating MC46 modules are advised to

- clarify any regulatory questions,
- have their completed product tested,
- have product approved for FCC compliance, and
- include instructions according to above mentioned RF exposure statements in end product user manual.

8 List of parts and accessories

Table 40: List of parts and accessories

Description	Supplier	Ordering information
MC46	Siemens	Siemens ordering number: L36880-N8320-A100
Siemens Car Kit Portable	Siemens	Siemens ordering number: L36880-N3015-A117
DSB45 Support Box	Siemens	Siemens ordering number: L36880-N8301-A100
BB35 Bootbox	Siemens	Siemens ordering number: L36880-N8102-A100-1
Votronic Handset	VOTRONIC	Votronic HH-SI-30.3/V1.1/0 VOTRONIC Entwicklungs- und Produktionsgesellschaft für elektronische Geräte mbH Saarbrücker Str. 8 66386 St. Ingbert Germany Phone: +49-(0)6 89 4 / 92 55-0 Fax: +49-(0)6 89 4 / 92 55-88 e-mail: contact@votronic.com
SIM card holder incl. push button ejector and slide-in tray	Molex	Ordering numbers: 91228 91236 Sales contacts are listed in Table 41.
Battery cell XWODA	Shenzhen Xwoda Electronic Co., Ltd	To place orders or obtain more information please contact: Shenzhen Xwoda Electronic Co., Ltd Building C, Tongfukang Industrial Zone Shiyan Town, Bao'an District Shenzen P.R. China Contact: Waichard Tsui Phone: +86-755-27623789 ext. 370 Fax: +86-755-27623078 Email: waichard@xwoda.com.cn Info: Http://xwoda.com.cn
DF12C board-to-board connector	Hirose	See Chapter 6.3 for details on receptacle on MC46 and mating headers. Sales contacts are listed in Table 42.
U.FL-R-SMT antenna connector	Hirose	See Chapter 4.1.2 for details on U.FL-R-SMT connector, mating plugs and cables. Sales contacts are listed in Table 42.

Table 41: Molex sales contacts (subject to change)

Molex For further information please click: http://www.molex.com/	Molex Deutschland GmbH Felix-Wankel-Str. 11 74078 Heilbronn-Biberach Germany Phone: +49(7066)9555 0 Fax: +49(7066)9555 29 Email: mxgermany@molex.com	American Headquarters Lisle, Illinois 60532 U.S.A. Phone: +1-800-78MOLEX Fax: +1-630-969-1352
Molex China Distributors Beijing, Room 1319, Tower B, COFCO Plaza No. 8, Jian Guo Men Nei Street 100005 Beijing People's Republic of China Phone: +86-10-6526-9628 Phone: +86-10-6526-9728 Phone: +86-10-6526-9731 Fax: +86-10-6526-9730	Molex Singapore Pte. Ltd. Jurong, Singapore Phone: +65-268-6868 Fax: +65-265-6044	Molex Japan Co. Ltd. Yamato, Kanagawa, Japan Phone: +81-462-65-2324 Fax: +81-462-65-2366

Table 42: Hirose sales contacts (subject to change)

Hirose Ltd. For further information please click: http://www.hirose.com	Hirose Electric (U.S.A.) Inc 2688 Westhills Court Simi Valley, CA 93065 USA Phone: +1-805-522-7958 Fax: +1-805-522-3217	Hirose Electric GmbH Zeppelinstr. 42 73760 Ostfildern Kemnat 4 Germany Phone: +49 711 4560-021 Fax +49 711 4560-729 E-mail info@hirose.de
Hirose Electric UK, Ltd Crownhill Business Centre 22 Vincent Avenue, Crownhill Milton Keynes, MK8 OAB Great Britain Phone:44-1908-305400 Fax: 44-1908-305401	Hirose Electric Co., Ltd. 5-23, Osaki 5 Chome, Shinagawa-Ku Tokyo 141 Japan Phone: +81-(0)3-3491-9741 Fax: +81-(0)3-3493-2933	Hirose Electric Co., Ltd. Europe Branch First class Building 4F Beech Avenue 46, 1119PV Schiphol-Rijk Netherlands Phone: +31-20-655-7460 Fax: +31-20-655-7469